ACCELERATOR DEVELOPMENT BRANCH
Brookhaven National Laboratory
Associated Universities, Inc.
Upton, New York 119/3

SSC TECHNICAL NOTE NO. 34
(SSC-N-40)

SSC BEAM TUBE BELLOWS ASSEMBLY

Carl Christianson
September 12, 1985

INTRODUCTION

The tenet held by the SSC Central Design Group, given to BNL by Norbert Engler of Fermilab in late July 1985, about the SSC beam tube is that the beam tube ends will be positioned accurately and permanently, (except to compensate for floor movement) thereby creating a situation where the beam tube bellows shall have to accept neither radial nor torsional displacement.

Other factors which beat upon the beam tube bellows design are:

1) The beam tube and bellows will be within cryogenic He which could reach a pressure of 300 psi during a magnet quench.

2) The beam tube will be copper plated or clad on its inner surface.

3) The accelerated beam should not "see" abrupt beam tube diameter changes, such as the bellows.

4) Minimum life is 1000 cool-down-warm-up cycles.

DESIGN CONCEPTS

The proposal given to me is to have co-axial bellows, the outer bellows to withstand the 300 psi He, the inner bellows to contain the beam tube ultra-high vacuum (UHV) and the space between the bellows to be connected to the insulating vacuum.

It follows logically therefore that no joint, welded or brazed, should stand alone between the He and the UHV (except the beam tube weld which should be as ductile and safe as the base material but samples of which I found to crack easily.)

The bellows assembly must not be difficult to install nor remove, it must accommodate leak checking fixtures, welding and cut-out machines.

BEAM TUBE - TO BELLOWS ASSEMBLY JOINT

The simplest joint is to have the bellows assembly ends the same as the beam tube and butt weld them to the beam tube. This joint design is objectionable because: 1) there is only one joint between the He and UHV; 2) there is no way to fully inspect and test the finished weld. A slight welding error could cause severe wall thinning, or a leak which would be difficult to pinpoint and repair; 3) any damage to the plating in the beam tube and/or the RF expansion joint cannot be ascertained.

A tubing lap joint has one advantage over a butt joint - alignment is automatic, but the objections above are equally valid for a welded lap-joint. A brazed lap-joint carries objections 1) and 3), part of 2) (leak pinpoint and repair) and adds 4) brazing in this case requires a flux which cannot be removed from the interior; 5) the bellows must be extra long to accommodate travel equal to the laps at each end, travel which is not used during operation.

The conclusion drawn from this section is that a flange must be shop-joined to the beam tube and a mating flange must be the ends of the bellows assembly

FLANGE TO BEAM TUBE JOINT

In Figure 1a, the tube end weld is easy and safe, once the plating has been removed thoroughly for some distance from the end. The second weld is a lap-joint weld for which objections 1), 2) and 3) above are valid.

Figure 1b shows the same flange for a brazed joint. Note that the weld tab is not required, thus it is a less expensive flange. Another advantage gained by brazing is that only one set-up is required to join the beam tube and vent tube to the flange and only one leak-check operation is required.

The sequence for welding would be: weld flange to beam tube (plating having been removed), leak check, weld vent tube to flange, leak check. Any damage to the plating must be repaired in either case (the plating must be replaced if a welded joint is used).

Brazed joints are commonly used at cryogenic temperatures, have a shear strength of about 40,000 psi (two 1/8" wide bands around the beam tube periphery is a bit over one square inch) and can be easily undone in the shop, if need be, with no damage to either the tube or the flange.

BELLOWS ASSEMBLY DESIGN AND INSTALLATION

Figure 2 is a design which meets the criteria given to me (coaxial bellows etc.) and to which none of the aforementioned objections can be assigned. The welding during the bellows installation will not make the flanges hot enough to affect the brazed joints or the spring fingers of the RF joint.

This design permits the vent tube to be shop-joined to the magnet and shop leak tested. Also, having the vent tube parallel to the beam tube close to the flange places it out of the way for the welding machine and the cut-out machine. Indeed, the vent tube will act as a key for those machines. The flange on the opposite end of the beam tube will have a blind hole for keying the machines.

The overall dimensions of the bellows assembly will depend upon which outer bellows is chosen. Thin wall, straight sided bellows, such as the inner bellows, will compress to 50% and extend to 125% of their relaxed convoluted length. The choice of the bellows will be a compromise between O.D. and relaxed length because, as the convolution height increases, so does the allowable travel and pressure. Also, for a given convolution height, as the wall thickness increases, the travel decreases.

RF EXPANSION JOINT

As stated in the introduction, the accelerated beam should not "see" abrupt changes in its vacuum chamber. A simple tube within the bellows would be acceptable except that its ends must slide within the beam tube. Sliding in a vacuum is not good and the cold surfaces make it worse.

Figure 3a shows the basic RF expansion joint I devised which eliminates friction and still hides the bellows from the beam. Figure 3 suggests one method of manufacture, wires fastened to short tubes. Other methods are to photo etch a tube or photo-etch (or stamp) a flat development of the tube, then roll it tubular and spot weld the edges to hold it tubular: Fig. 3b.

The maximum percent of open space to conductor and the maximum dimensions of the open spaces must be determined by tests such as those performed by S. Giordano for the ISABELLE UHV pump stations. 90% open, 1/4" square hole screen was found to be acceptable in that case.

Figure 4 shows four possible RF connections between the beam tube I.D. copper and the RF expansion joint. Considering ease of assembly, cost and number of contact points, Figure 4c is my choice as best of the four. The RF expansion joint and contacts can be made of any of many materials, plain or plated.

LIFE TEST

Bellows assembly life tests, at about 5 cycles per minute, should be done on several assemblies as proposed and manufactured by each of several vendors. Because we found that belows manufacturers are conservative in rating their product, I will be surprised if any of the bellows tested fails before 10,000 cycles if the recommended stroke is not exceeded. To save some money, perhaps the first life tests should be done using only the outer bellows. It has been suggested that a life cycle test of the bellows with the external 300 psi He at room temperature would be a more stringent test than if the test were to be run with the He at about 4°K, but I believe that it would be imprudent to accept a design as final without its having been tested under operating conditions (of course, except for cycle time).

The Rf expansion joint should be life tested assembled to the bellows. A tube mounted within, and electrically insulated from the RF expansion joint will signal if part of the RF expansion joint leaves its allowable space.

The vacuum within the bellows will be continuously monitored by a leak detector. If several bellows assemblies are tested together the bellows interiors will be manifolded to the leak detector and each valved off when it leaks and the test stopped when the last bellows in the test leaks.

Figure 5 illustrates one type of bellows life cycle test rig. The air cylinders counterbalance the up to 3000 lb. axial force exerted by the bellows. Without a counterbalance, a large and wasteful gear motor would be needed as a driver.

A FEW QUESTIONS

If the outer bellows starts to leak -

1) how will the leak be noticed?
2) how much He will enter the insulating vacuum before the leak must be repaired?

One answer to question 1 is to extend the bellows vent with a plastic tube to the outside through a sniffer valve on the vacuum jacket. A "T" in the plastic tube must be open adjacent to a vacuum gauge which monitors the insulating vacuum, thus, a rise in pressure would signal a problem. A leak detector can then be attached to the sniffer valve and if He is present, it is probably the bellows which has sprung a leak.

Someone else will have to answer question 2.

WELDING AND CUT-OUT MACHINES

The welding machine for installing the beam tube bellows will be a motor driven torch carrier, be clamped and keyed to the beam tube and have removable rollers which will align to two flanges radially for the first weld (refer to Fig. 2). One machine will be able to make the three welds.

The cut-out machine will also be clamped and keyed to the beam tube and be motor-driven, but will have to be heavier than the welding machine. It may be necessary to make chips when removing the short piece of tubing (again refer to Fig. 2) but, collecting all the chips with a vacuum cleaner will not be difficult. The inner weld will be parted with a tubing cutter wheel on the cut-out machine. Because this wheel will make metal dust, the chip vacuum cleaner will be used here also because debris must be kept out of the between bellows space.

Revised 8/29/85

DISTRIBUTION

BLDG. 911

AD Library
(H. Martin)
G. Bunce
H. Foelsche
J. Grisoli
P. Hughes (1) + 1
for each author
D. Lazarus
D. Lowenstein
T. Sluyters

FOR SSC PAPERS

FNAL

C. Rode
W. Fowler

LBL

R. Donaldson (2 copies)
P. Limon
C. Taylor
M. Tigner
R. Wolgast

BLDG. 902

D. Brown
J. Claus
J.G. Cottingham
E. Courant
P. Dahl
F. Dell
A. Flood
M. Garber
C. Goodzeit
A. Greene
R. Gupta
H. Hahn
H. Halama
K. Jellett
E. Kelly
S.Y. Lee
R. Louttit
G. Parzen
A. Prodell
P. Reardon
W. Sampson
R. Shutt
J. Sondericker
S. Tepekian
P. Wanderer
E. Willen

BLDG. 460

N. Samios

BLDG. 510

H. Gordon
T. Kycia
L. Leipuner
S. Lindenbaum
R. Palmer
M. Sakitt
M. Tannenbaum
L. Trueman
D. White

BLDG. 535

W. Casey

BLDG. 725

M. Barton

S&P in Magnet Division for all MD papers

S&P in Cryogenic Division for all Cryo Papers
(and J. Briggs, R. Dagradi, H. Hildebrand
W. Kollmer)

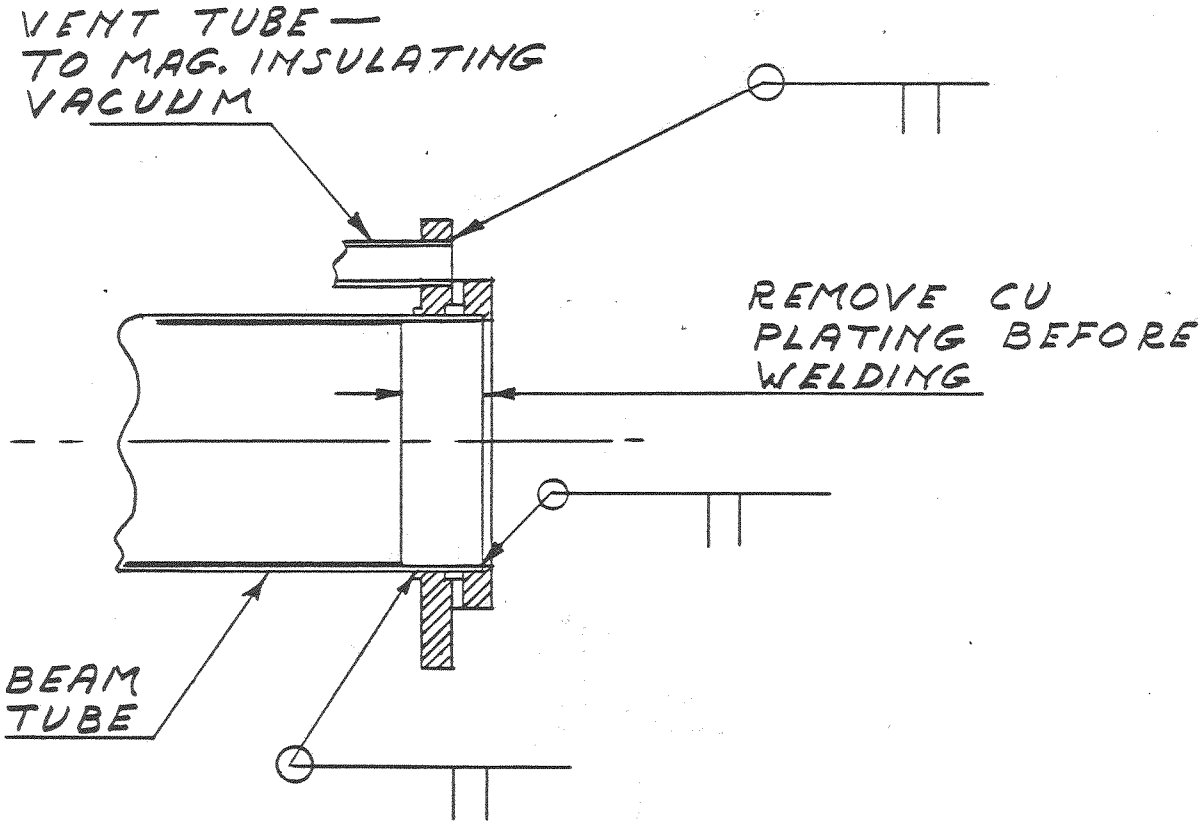
VENT TUBE —
TO MAG. INSULATING
VACUUM
REMOVE CU
PLATING BEFORE
WELDING
BEAM
TUBE

FIG. 1a

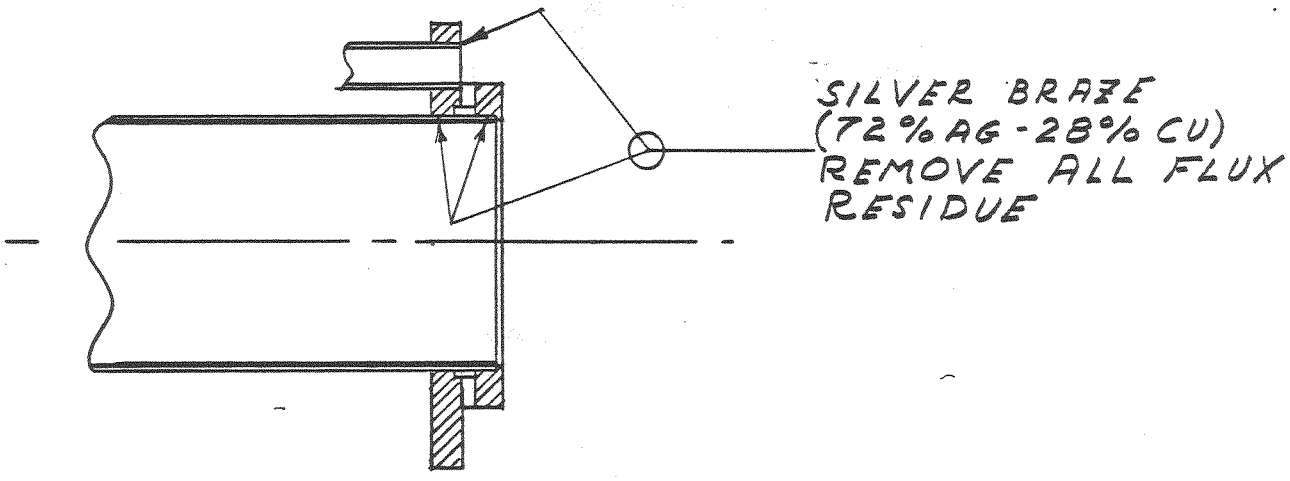
SILVER BRAZE
(72% AG - 28% CU)
REMOVE ALL FLUX
RESIDUE

FIG 1b

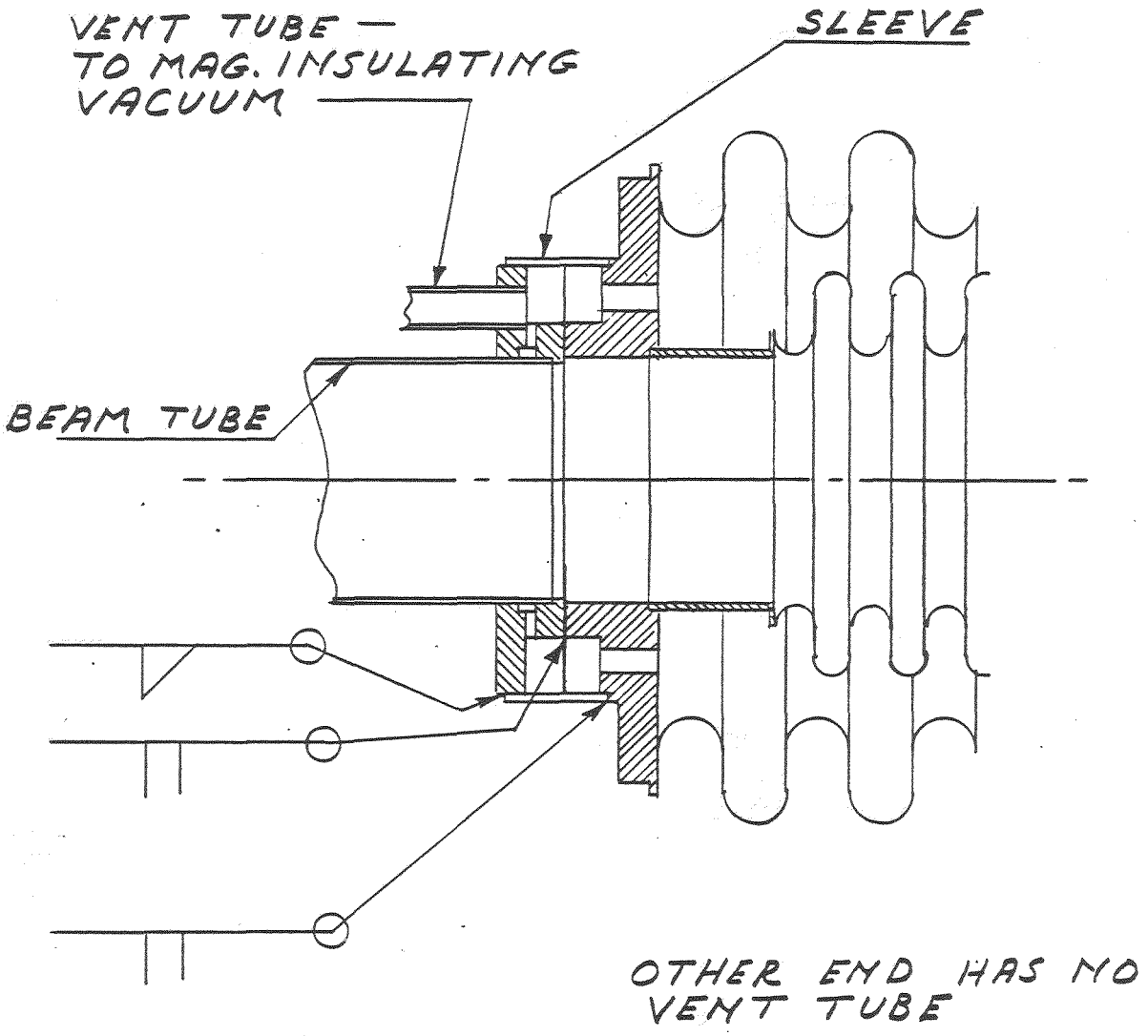
VENT TUBE —
TO MAG. INSULATING
VACUUM
SLEEVE
BEAM TUBE
OTHER END HAS NO
VENT TUBE

FIG. 2

FIG 3a

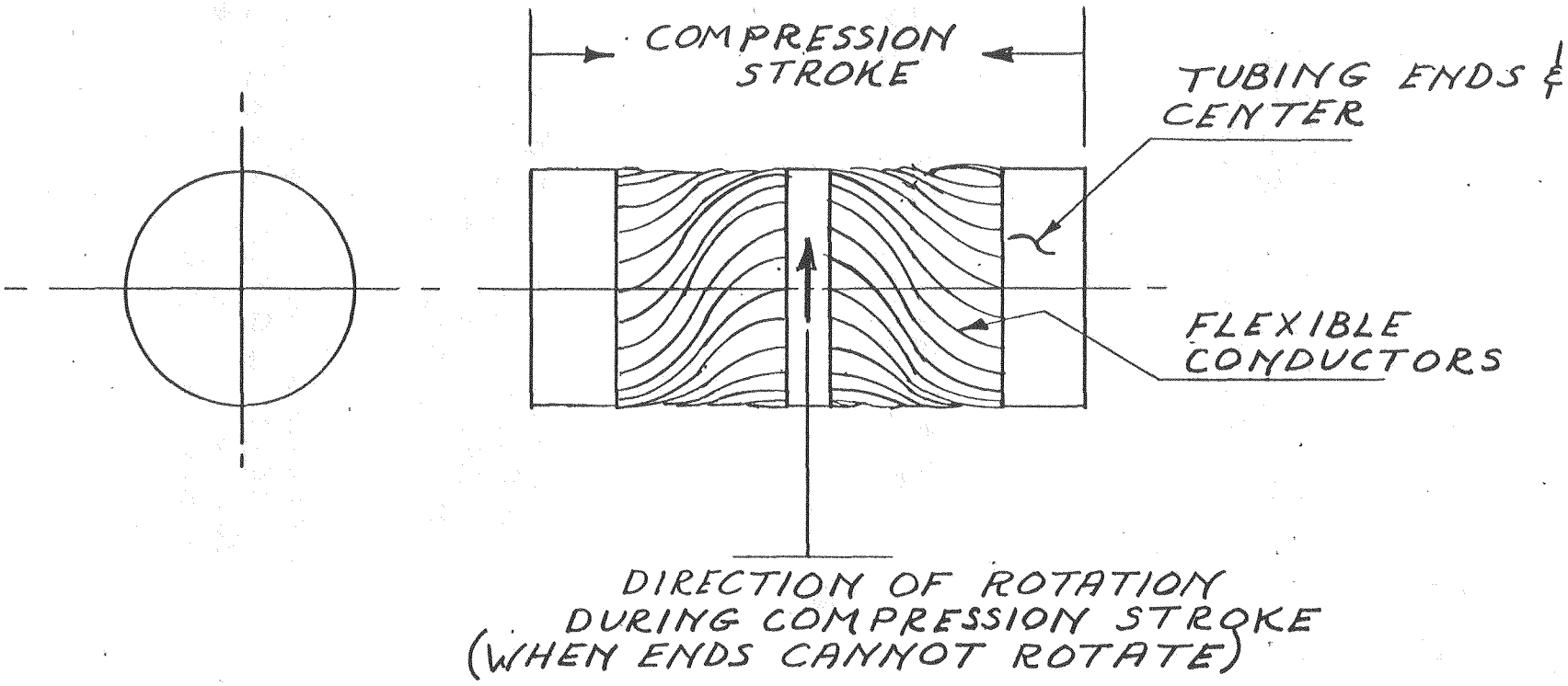

NOTES

1 AN RF EXPANSION JOINT MAY CONTAIN ANY NUMBER OF RIGHT HAND-LEFT HAND HELIX PAIRS AS SHOWN

2 SEE FIG. 3b FOR TWO CONDUCTOR PATTERNS & ETCHING NOTES

RF EXPANSON JOINT

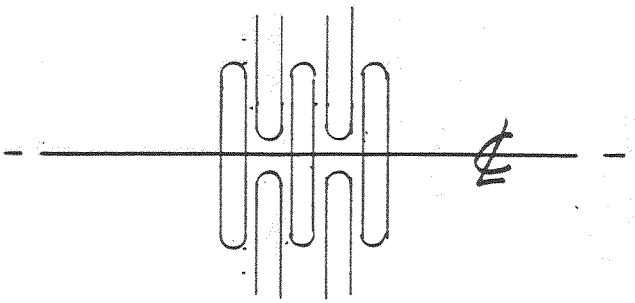

WITH THIS PATTERN THERE IS NO ROTATION IN ANY ELEMENT

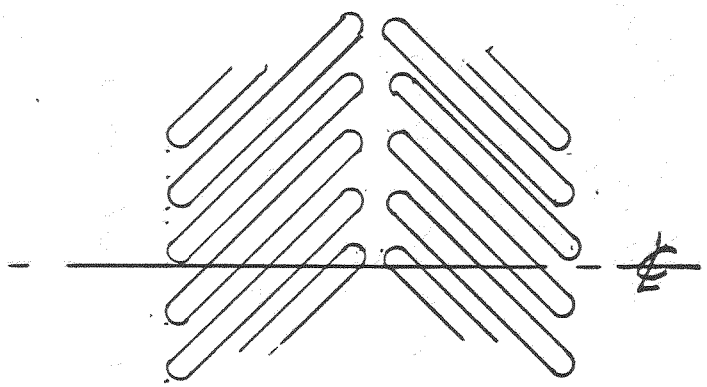

A PATTERN SIMILAR TO THE WIRE VERSION

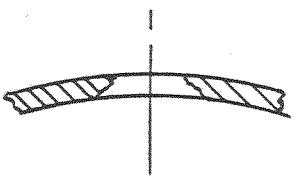

A TUBE CAN BE ETCHED FROM THE OUTSIDE — THE HOLE EDGES WILL BE TAPERED

ETCHING A FLAT PIECE FROM BOTH SIDES WILL GIVE ALMOST-SQUARE HOLE EDGES

FIG 3 b

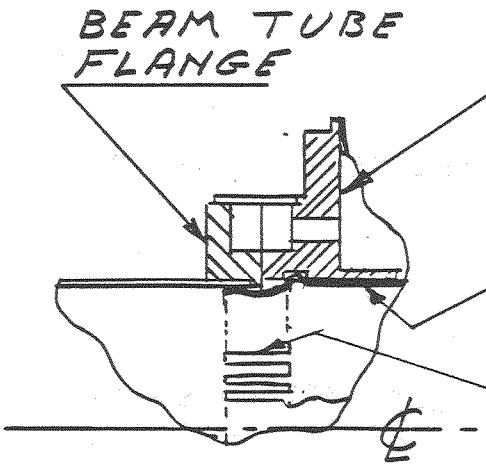
BEAM TUBE FLANGE
BELLOWS FLANGE
RF EXPANSION JOINT - BULGED INTO FLANGE GROOVE TO LOCK JOINT TO FLANGE
FIG 4a - SPRING FINGERS INTEGRAL TO RF JOINT
℄

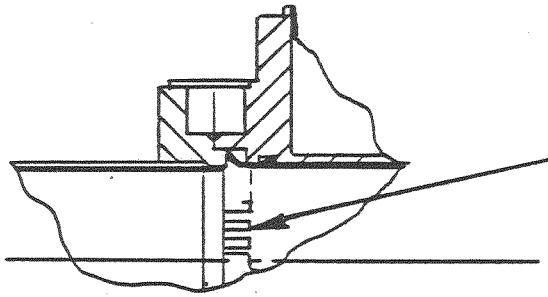
FIG 4b - SPRING FINGERS INTEGRAL TO RF JOINT

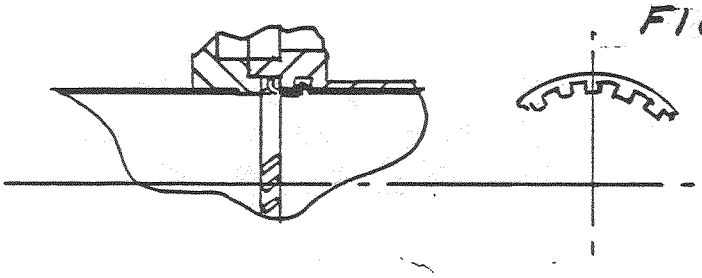
FIG 4c WASHER WITH TWISTED INTERNAL SPRING FINGERS

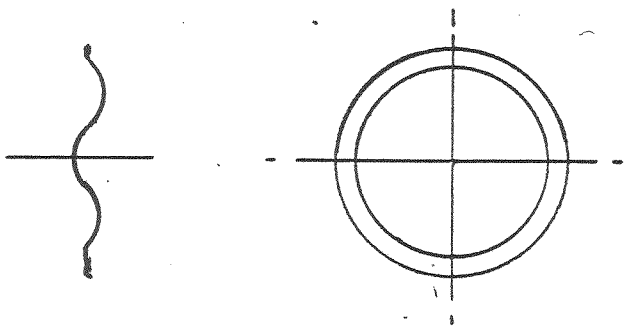
FIG 4d SAME FLANGES AS 4c & 4d - WAVY WASHER

FIG 4

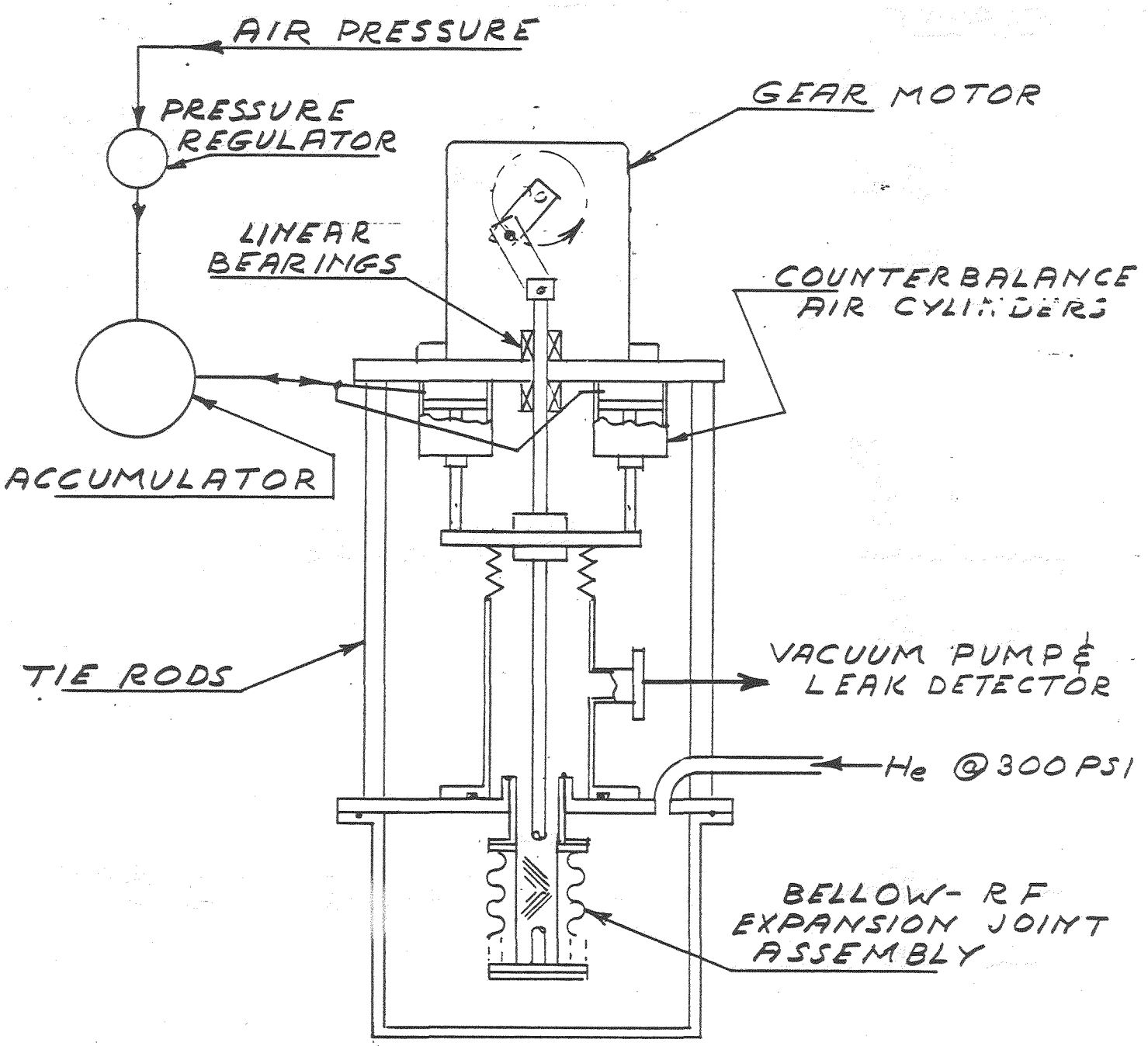
AIR PRESSURE
PRESSURE REGULATOR
GEAR MOTOR
LINEAR BEARINGS
COUNTERBALANCE AIR CYLINDERS
ACCUMULATOR
TIE RODS
VACUUM PUMP & LEAK DETECTOR
He @ 300 PSI
BELLOW- RF EXPANSION JOINT ASSEMBLY

FIG 5