SSC-N-33
August 1985

REPRESENTATION OF THICK QUADRUPOLES BY THIN LENSES

Richard Talman
SSC/CDG

Introduction

In developing a pure "kick" tracking program it is necessary to replace all lattice elements by thin elements. The reason such a pure kick program is desirable is the ease and reliability with which it can be applied to off-momentum, misalignment and multipole feed-down effects.

This note is devoted to representing thick quadrupoles by thin lenses. Such a representation does no violence to idealized lattices since, if thin lens were at the disposal of the accelerator designer, he would use nothing else. But for comparison with realistic lattices containing thick quadrupoles it is important to have a more faithful representation. In typical cases the regular arc quads can be treated as single thin lenses but the IR quads must be treated as thick quadrupoles or as several thin lenses.

Strategy to be Employed

Consider replacing a quadrupole of length L

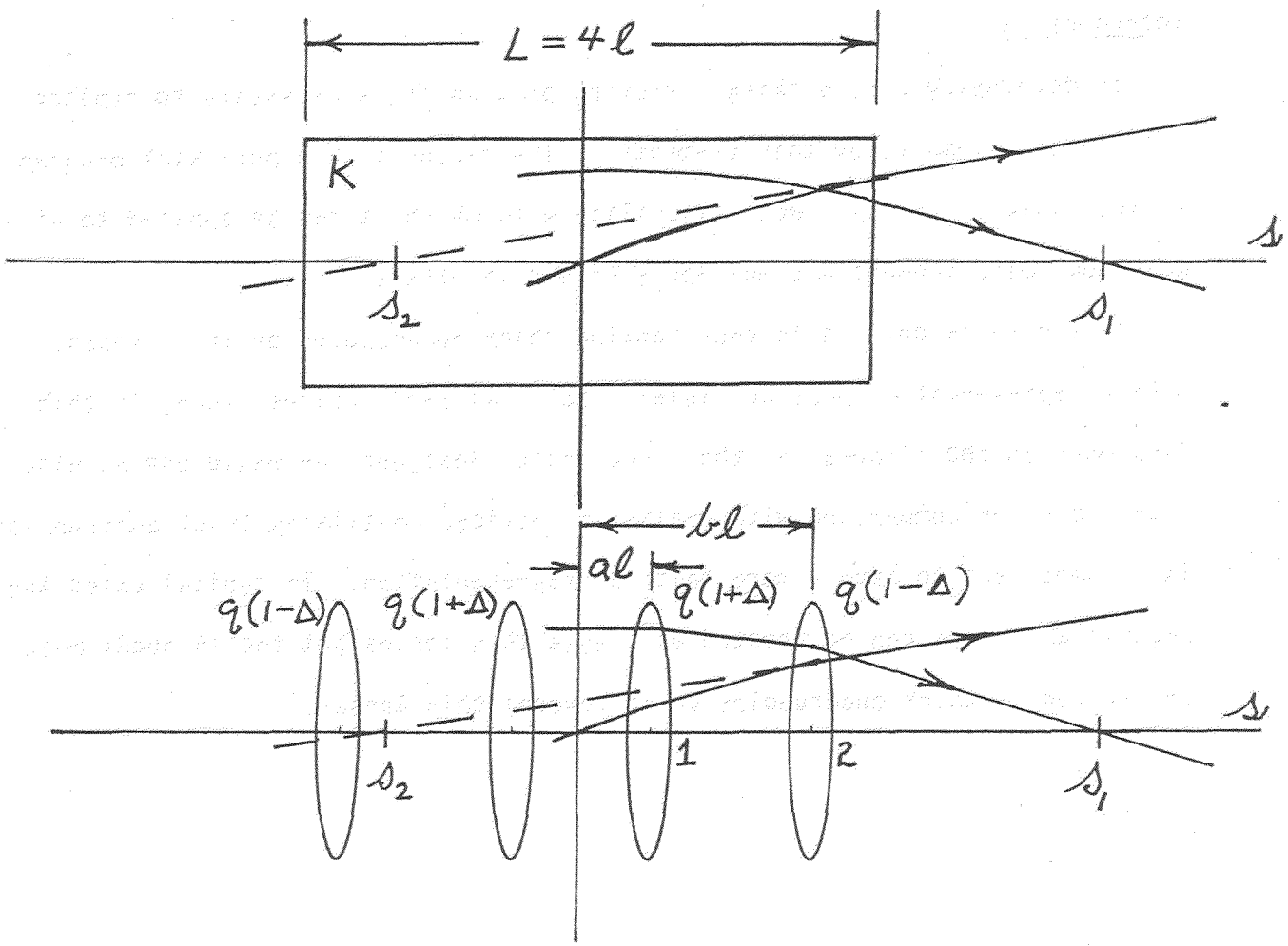

Fig. 1.

with 4 thin lenses with parameters a, b and Δ as shown. It will be possible to obtain results for 1, 2, 3 or 4 quadrupole representations by the special choices, shown in Table 1.

Table I

n = 4	a	b	Δ
= 3	0	b	Δ
= 2		b	-1
= 1	0	0	

where blank stands for "don't care."

The product KL characterizes the strength of the thick quadrupole where $K > 0$ is the standard quadrupole strength coefficient. A nominal zeroth approximation for the inverse focal length of each of the four thin lenses is

$$q = \frac{KL}{4} = K\ell \tag{1}$$

where

$$\ell = \frac{L}{4} \tag{2}$$

Uniform spacing of the thin lenses would correspond to the choice $a = 0.5\ell$, $b = 1.5\ell$. Though a natural first choice this will turn out to be not a "good" one.

Special cosine-like and sine-like rays are drawn in Fig. 1. Any ray outside the thick lens can be written as a superposition of these two rays. One of these rays aims for $s = s_1$ and the other appears to come from $s = s_2$. The strategy to be employed is to choose a, b and Δ to make s_1 and s_2 for the thin lenses match s_1 and s_2 for the thick lens as nearly as possible. Since the thick lens is represented by transcendental functions an exact match would require that the coefficients a, b and Δ be functions of q. For the same reason it is difficult (impossible with 4 quads) to match horizontally and vertically simultaneously. We will demand only that the match become good in the limit $q \to 0$ so that, with sufficiently fine segmentation, an

arbitrarily good representation will result. This will be possible with a, b and Δ independent of q.

The conclusions are best represented graphically as in Fig. 2 and, after further discussion, in Table 2. In each case the quadrupoles end up with equal strength and equal spacing though that was not imposed artificially. Note though that the magnitude of the spacing must be selected exactly as shown. The one lens (n = 1) representation is unsatisfactory in the sense that a faithful representation does not result even after successively breaking the thick lens into equal parts to go to the limit of small q. The n = 2, 3 and 4 solutions are all satisfactory in this sense. To represent a thick lens by 4 thin lenses an alternate scheme to the one shown would be to split the quad in half and apply the n = 2 fit to each half. In a sense to be explained below it is about 2.5 times more accurate to use the n = 4 solution shown.

Thick Lens Formulae

We work with a half-quad characterized by

$$\phi_{1/2} = K^{1/2}\,\frac{L}{2} = 2(q\ell)^{1/2} \tag{3}$$

$$\begin{pmatrix} x \\ x' \end{pmatrix}_{out} = \begin{pmatrix} \cos\phi_{1/2} & \frac{1}{K^{1/2}}\sin\phi_{1/2} \\ -K^{1/2}\sin\phi_{1/2} & \cos\phi_{1/2} \end{pmatrix} \begin{pmatrix} x \\ x' \end{pmatrix}_{in} \tag{4}$$

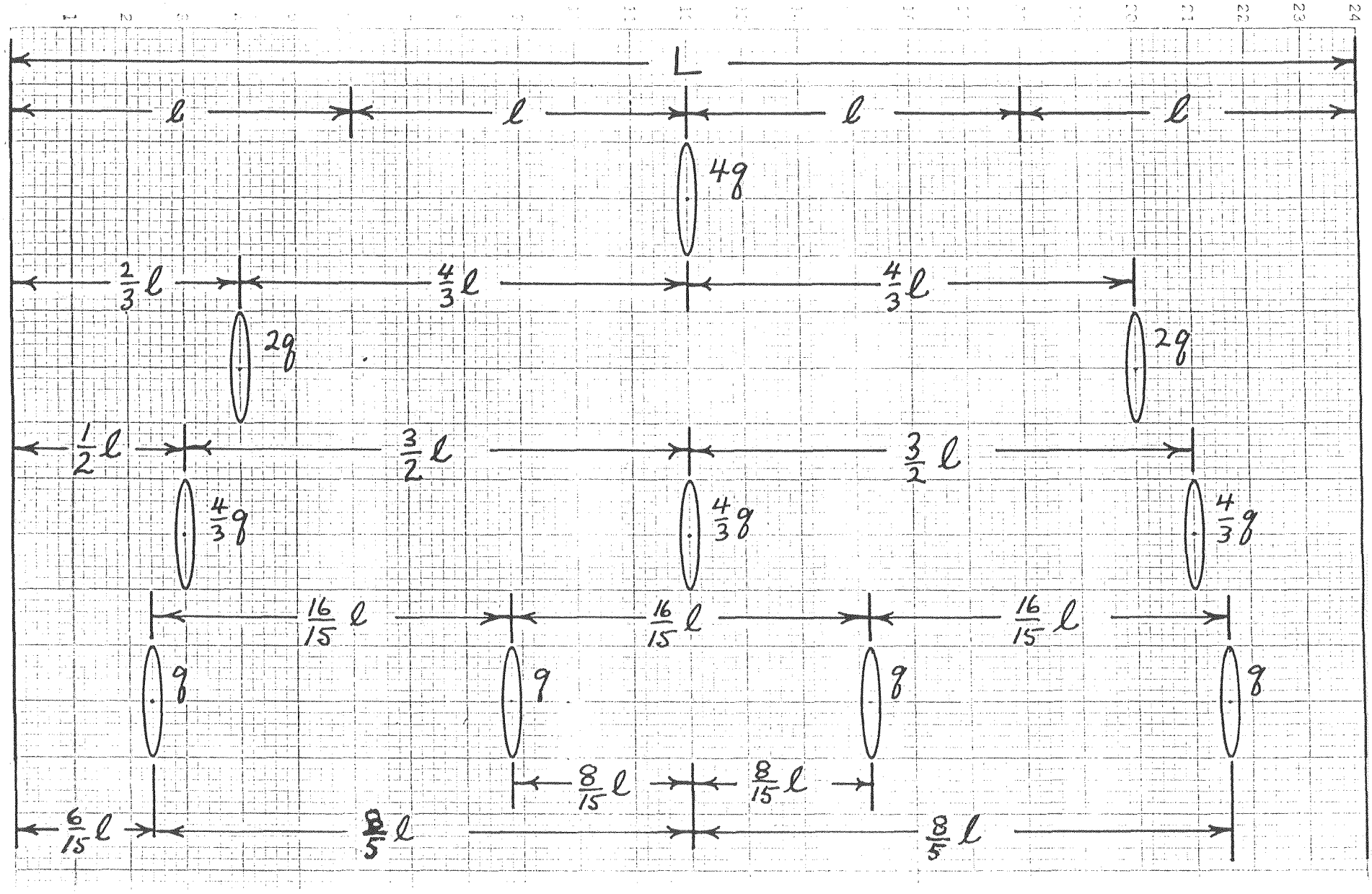

Fig. 2. "Best fit" representation of a thick lens by n thin lenses. KL = 4q.

Cosine-like trajectory.

$$x_{out} = \cos 2(q\ell)^{1/2}$$

$$x'_{out} = -\left(\frac{q}{\ell}\right)^{1/2} \sin 2(q\ell)^{1/2} \tag{5}$$

Solving for s_1 we get

$$s_1 = 2\ell - \frac{x_{out}}{x'_{out}}$$

$$= 2\ell + \left(\frac{\ell}{q}\right)^{1/2} \cot 2(q\ell)^{1/2}$$

$$= \frac{1}{2q} + \frac{4}{3}\ell + O(q) \tag{6}$$

where the cotangent has been expanded, dropping terms linear and higher in q.

Sine-like trajectory.

$$x_{out} = \left(\frac{\ell}{q}\right)^{1/2} \sin 2(q\ell)^{1/2}$$

$$x'_{out} = \cos 2(\ell q)^{1/2} \tag{7}$$

Solving for s_2 one gets

$$= -\frac{8}{3}\ell^2 q + O(q^2) \tag{8}$$

Thin Lens Formulae

Cosine-like:

$$x_1 = 1$$

$$x_1' = -q(1+\Delta)$$

$$x_2 = 1 - q(1+\Delta)(b-a)\ell \tag{9}$$

$$x_2' = -2q + q^2(1-\Delta^2)(b-a)\ell$$

$$s_1 = b\ell - \frac{x_2}{x_2'}$$

$$= \frac{1}{2q} + b\ell - (b-a)\ell\frac{(1+\Delta)^2}{4} + O(q) \tag{10}$$

Sine-like:

$$s_2 = -q\,\frac{(a^2+b^2)\ell^2 + \Delta(a^2-b^2)\ell^2 + O(q)}{1 + O(q)}$$

$$= -\ell^2 q[a^2+b^2+\Delta(a^2-b^2)] + O(q^2) \tag{11}$$

Conditions on the Parameters

Equating (6) and (10) the term inverse in q vanishes (which is why the strengths in Fig. 1 had to add up to 4q) and we get

$$\frac{4}{3} = b - (b-a)\,\frac{(1+\Delta)^2}{4} \tag{12}$$

Equating (8) and (11) and canceling a factor $\ell^2 q$, to be re-introduced later, we get

$$\frac{8}{3} = b^2(1-\Delta) + a^2(1+\Delta) \tag{13}$$

These equations are to be solved for a, b and Δ. To be physically acceptable it is necessary that

$$0 \leq a \leq b \tag{14}$$

Surprisingly the equations are unsolvable in this sense. Since equation (12) relates terms independent of q it is important that it be satisfied exactly. This can be used to solve for a according to

$$a = b + \frac{\frac{16}{3} - 4b}{(1+\Delta)^2} \tag{15}$$

Note that this cannot be satisfied with n = 1 since, in that case, a = b = 0. Substituting into (13) one obtains

$$b^2[2 - \frac{8}{1+\Delta} + \frac{16}{(1+\Delta)^2}] + b[\frac{32/3}{1+\Delta} - \frac{128/3}{(1+\Delta)^3}] + \frac{(16/3)^2}{(1+\Delta)^3} - \frac{8}{3} = 0 \tag{16}$$

There is no solution to this equation consistent with (14).

It is useful to look separately at the n = 2, 3 and 4 cases. For n = 2 equations (12) and (13) become

$$b = \frac{4}{3} \tag{17}$$

$$\frac{8}{3} = 2b^2 \tag{18}$$

These are inconsistent, with

$$\text{"error"} = 2b^2 - \frac{8}{3} = 0.89 \tag{19}$$

For n = 3, equation (12) yields

$$b = \frac{16/3}{3 - 2\Delta - \Delta^2} \tag{20}$$

We demand that this be satisfied exactly. Equation (13) becomes

$$\frac{8}{3} = \frac{(1-\Delta)\ 16/3}{(3 - 2\Delta - \Delta^2)^2} \tag{21}$$

This equation is not solvable consistent with (14). The best one can do is to find the value of Δ which minimizes the error. This yields

$$\Delta = -\frac{1}{3} \tag{22}$$

$$b = \frac{3}{2} \tag{23}$$

$$\text{"error"} = b^2(1-\Delta) - \frac{8}{3} = .333 \tag{24}$$

For the case n = 4 the minimum "error" is found numerically to occur in the neighborhood of and probably exactly at $\Delta = 0$. Taking this to be exact one obtains

$$b = 8/5 \tag{25}$$

$$a = 8/15 \tag{26}$$

$$\text{"error"} = .1777 \tag{27}$$

These results are summarized in Fig. 2 and Table 2. Note that in each case the quad strengths and spacings come out equal.

Table 2
Optimal Parameters

# of Quads	a	b	Δ	Quad Strengths	Quad Spacing	"Error"
1	0	0		4q		N.A.
2		4/3	-1	2q, 2q	$4\ell/3$	.889
3	0	3/2	-1/3	4q/3, 4q/3, 4q/3	$3\ell/2$	.333
4	8/15	8/5	0	q, q, q, q	$16\ell/15$	.177

Error Assessment

To assess the accuracy of the thin lens replacement consider Fig. 3 as an example.

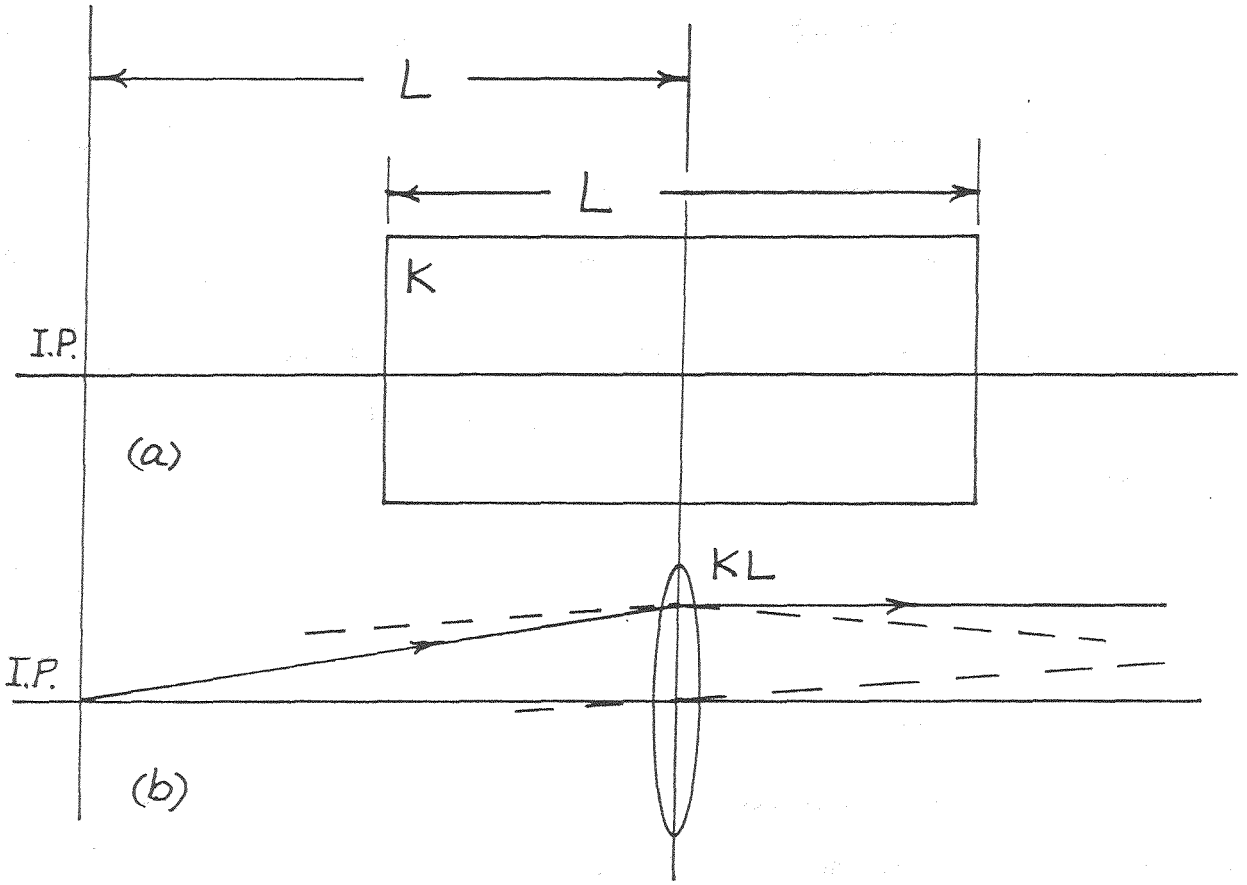

Figure 3. Typical thick lens application for a low beta intersection region.

To make a low beta intersection point a quad of length L is positioned with its center a distance L from the IP. Typically the quad is intended to perform "point-to-parallel" focusing as indicated. From the n = 1 solution the required quadrupole strength satisfies

$$\frac{1}{KL} = L \tag{28}$$

From equations (1) and (2) this corresponds to

$$q\ell = \frac{KL^2}{16} = \frac{1}{16} \tag{29}$$

For the n = 1 fit the s_1 discrepancy can be quantified by comparing (6) and (10)

$$\frac{1}{2q} + \frac{4}{3}\ell = \frac{1}{2q} \tag{30}$$

The fractional discrepancy is $8\ell q/3$ which is 17%. This is large enough to alter a "highly-tuned" low beta design seriously.

For each of the n = 2, 3 and 4 solutions there is no s_1 discrepancy. The dotted lines in Fig. 3(b) indicate the decomposition of the ray of interest into a sine-like and cosine-like part. The out-going ray will be erroneous owing to the s_2 discrepancy.

Temporarily let us ignore the fact that an s_2 error is not equivalent to an s_1 error. We assess the importance of the s_2 error by comparing it to 1/(2q) as in (30), restoring the factor $\ell^2 q$ dropped previously

$$\begin{aligned} \text{fractional error} &= \frac{\ell^2 q \text{ "error"}}{1/(2q)} \\ &= 2(\ell q)^2 \text{ "error"} \end{aligned} \tag{31}$$

where the quantity "error" is what appears in equations (19), (24) and (27) and also Table 2. For the n = 4 fit this fractional error is $2 \times (1/16)^2 \times .177 = 0.14\%$.

Finally we consider the relative importance of s_1 and s_2 discrepancies. The effect of an s_2 discrepancy is greater than or less than an equal s_1 discrepancy depending upon whether one is concerned with angular errors or displacement errors. But since the relative factors which enter are not greater than 2 or 3 we can continue to regard the above estimate as roughly valid.

Based on these considerations one anticipates that an adequate representation of any realistic lattice will result by replacing main arc quads by single thin lenses and critical IR quads by 4 thin lens. Other special quads can be replaced by 4 thin lenses also since there are few enough to be not extravagant. Finally one must be prepared to trim the arc tunes slightly to give tunes of the entire machine correctly.

1067S