Accelerator Development Branch
BROOKHAVEN NATIONAL LABORATORY
Associated Universities, Inc.
Upton, New York 11973

SSC Technical Note No. 32
(SSC-N-26)

Collars for the Design "D" SSC Dipole: A Design Review

R.J. LeRoy

August 20, 1985

Abstract

The purpose of this report is to summarize the design of the collars, their use in the magnet, and the analysis done on the collars. The report also covers measured results of collar deflections from the Design "D" magnets assembled to date both at BNL and LBL. Covered are the considerations and analysis that went into the design of the collars. The collar loads are described which include the Lorentz forces at 6.5 T along with the necessary prestress to resist those forces. Outlined are the three basic considerations that determined the final design of the collars: collar deflections, collar stresses, and the magnetic losses due to the width of the collars. The finite element analysis that was used to predict the collar deflections and stresses is briefly reviewed. Material specifications and mechanical properties are presented on the stainless steel required for the collars. Preliminary measured results from both LBL and BNL of collar deflections are given and compared to the predicted values. These results show that the actual room temperature deflections of the collars when keyed exceed those predicted. However, the collar deflections as measured by LBL when energized agree quite well with predicted values. Also, measurements taken of collars from the first 4.5 m magnet after disassembly indicate that the collars had yielded due to the loading in the press during keying. Finally, assembly experiences from the first 4.5 m magnets assembled at BNL are outlined along with a discussion on the retention of coil prestress after collar keying. As an appendix to this report is a report from LBL on the design and performance of their first two collared one meter magnets.

Introduction

The Design "D" SSC dipole is a 4 cm bore, 6.5 T cold iron superconducting magnet with collared coils. The function of the collars is to provide the necessary prestress to the coils to counteract the Lorentz forces generated for an operating central field of 6.5 Tesla. This paper will discuss how the collar design was arrived at and how well the actual collars achieve this design.

The design of the collars must take into account: the stresses developed in the collar under load, the resulting deflections, and the loss of field due to the removing of iron next to the coils. The collars also serve to position the coils within the iron yoke. The variable design parameters are collar cross sectional width, keying slots, and material selection. A cross section of the magnet assembly in Fig. 1 shows the 15 mm wide Design "D" collar with two 3/16" key slots The collars are stamped from high strength stainless steel (60 ksi min. yield strength). The shape of the collars is similar to the Fermilab Saver collars. Fabrication and assembly of the collar packs are also similar except there is no welding involved. Pins and keys are used instead.

Collar Loads

The loading on the collars was determined by calculating the Lorentz force per conductor turn for a central field of 6.5 T[1]. The plot in Fig. 2 shows the Lorentz force per turn per linear inch. Integrating the curves for the circumferential component of the Lorentz force gives the amount of force necessary to restrain the coils from moving from the post at 6.5 tesla. Dividing by the bare cable width gives stress values of 5550 psi for the inner coil and 4350 psi for the outer coil. In order to achieve this load when the magnet is at 4°K and energized, a somewhat greater load needs to be applied during room temperature assembly. This load must take into account the loss of prestress due to thermal contraction and stress relaxation.

The thermal loss of prestress in the coils is a function of the difference in thermal contraction between the coils and the collars, and the modulus of elasticity of the coils at 4°K. Measurements of cured coil stacks compressed under the same load that is seen in assembly indicate the transverse (circumferential) thermal contraction of the coils to be about 0.5 mils per inch greater than the stainless steel. The thermal contraction of the coils in the longitudinal direction matches that of

stainless steel. Preliminary measurements of the coil modulus at 77°K indicate E = 2.5-3.0E6 psi. Room temperature modulus is 1.0-1.5E6 psi. Therefore the calculated thermal loss of prestress is about 1500 psi[2] which is consistent with that measured in the outer coils of the one meter models at LBL. The other source of prestress loss is stress relaxation. Strain gage measurements of collared coils under load show that the loss of prestress over several days due to stress relaxation at room temperature is about 15%.

With the above information one can now determine the minimum amount of prestress necessary at assembly to fully restrain the coils from releasing from the posts at 6.5 T. By adding 1500 psi to the circumferential stress calculated from the Lorentz forces to account for the thermal losses, and multiplying by 1.15 to allow for stress relaxation, the following values are arrived at:

INNER COIL	8000 PSI
OUTER COIL	6700 PSI

Experience with several magnets will properly determine the adequacy of these numbers.

Collar Analysis - Deflections and Stresses

Analysis of the collars was accomplished using the finite element code ANSYS. The purpose of the analysis was to determine, for different collar widths, the deflections and stresses of the collars under different loads. Initial models considered left-right symmetry along the vertical plane and constraints on the collar tab to simulate the collars locked together. Results from this model were used to design the collars. Later models will consider the entire collar with appropriate constraint equations to simulate the pins which transfer the forces from one collar to the other. The coils were modeled as sections of isotropic cylinders. Conductor angles, friction, and the presence of wedges were not taken into account. The circumferential prestress and the Lorentz forces are applied to the coil sections which in turn load the collars. The modulus of elasticity of the coils was taken as 1.5E6 psi. Fig. 3 shows the model of the coil-collar cross section.

Two basic load conditions were analyzed. The first considered the keyed collars under a prestress load only. This model was loaded with a compressive stress applied on the coil midplane of 9 ksi on the inner coils

and 6.5 ksi on the outer coils. These are likely values of prestress that would be reached in assembly. The second load case imposed the 6.5 T Lorentz forces along the coils with the same preload applied at the midplane. The prestress at 4°K will actually be less than the prestress at room temperature. Zero vertical displacement is allowed in the key slots. The horizontal displacement of the tab is constrained to act symmetrically with the opposite side of the collar. This simulates the engagement of the tab with another collar. Initial analysis considered both 15 and 30 mm wide collars in both aluminum and stainless steel. The use of single or dual keys was also considered.

Results from the analysis indicated that a dual key design was preferable. Dual keys kept peak stresses down and made for a stiffer collar. Deflection results showed that a 30 mm aluminum collar with 30% less prestress load at room temperature was roughly equivalent to a 15 mm stainless collar. The lower room temperature prestress load in the aluminum collars is due to the greater thermal contraction of aluminum compared to stainless steel. At room temperature prestress, the collars are predicted to deflect slightly more vertically than horizontally. However, when energized at 4°K, the collars take a definite elliptical shape along the horizontal axis. A summary of the calculated deflections in the 15 mm stainless steel collars for both room temperature loading and Lorentz loading is shown below. (Deflections in mils)

Calculated Collar Deflections - 15 mm S.S.

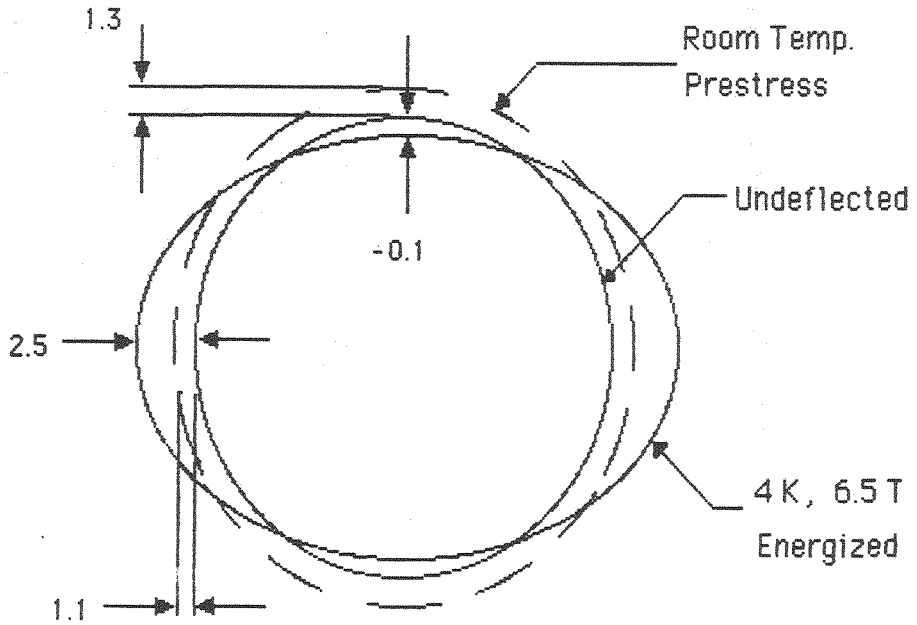

The stresses in the collar were examined at both room temperature loading and Lorentz loading. Because the yield strength of the stainless steel is well above 150 ksi at 4°K, the worst case with regard to stress is at room temperature. With the prestress loading in the inner coil at 12 ksi and the outer coil at 9 ksi, the maximum von Mises' yield stress after the collars are keyed is about 58 ksi at the key slot as shown in Fig. 4. The actual yield strength of the material is about 15% higher. With 9 and 6.5 ksi on the inner and outer coils respectively and the Lorentz forces superimposed on the coils, the maximum von Mises' yield stress is 42 ksi as shown in Fig. 5. The collars are designed to operate in the elastic range so that no permanent deformation occurs. Therefore, there is no variation in conductor placement between thermal cycles.

Magnetic Considerations

After the deflections and stresses in the collar are calculated the last consideration for collar selection is the effect it has on the central magnetic field. With respect to the magnitude of the field, the more iron removed, the greater the requirements made on the superconductor to achieve a given field. The plot below reflects the decreased contribution of the iron to the central field which must be made up by increased performance of the superconductor. The current density J_c, referred to 4.2°K and 5 T, is that which is required in the superconductor for a central field of 6.5 T.[3] The plot shows that J_c must be 200 A/mm^2 higher for a 30 mm collar than for a 15 mm collar in order to achieve the same central field of 6.5 T.

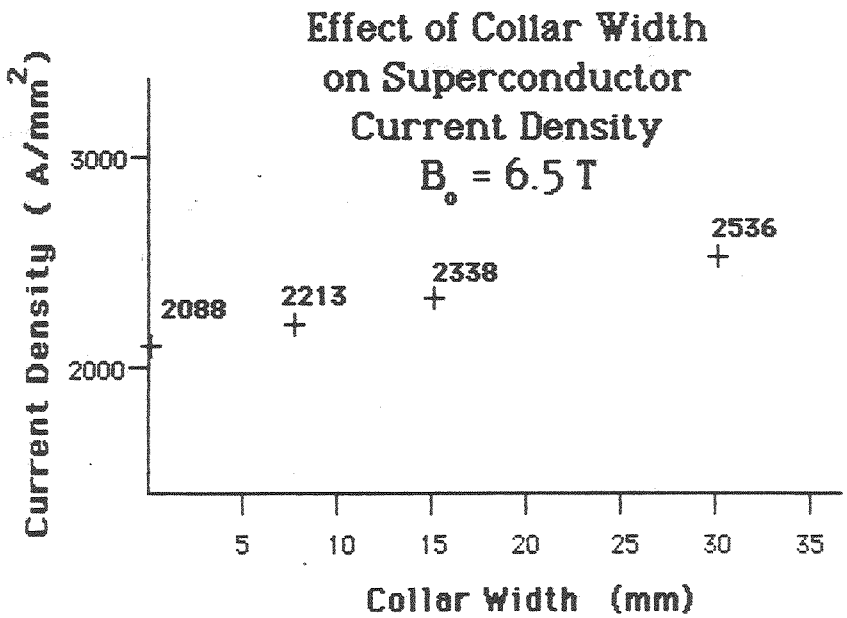

Collar Design

The calculated deflections indicate that the relative radial motion between the prestressed and the energized condition, for both the 15 mm stainless steel and the 30 mm aluminum collars, was less than 2 mils. Greater than 2 mil deflections were considered to be excessive for both field quality requirements and coil motion with respect to quenches. Therefore, to minimize the field loss, a 15 mm collar was chosen. Reference BNL drawing number 22-223.02-4 for details.

The collar is stamped out of 16 ga. (.059" nom.) stainless steel. The two key slots are positioned and sized so that when the collars are bottomed out at the tabs, the coils are over compressed by 2 mils and a .1865" key has 2 mils of clearance for insertion. The holes allow for a nominal one mil diametric running clearance for the pins which transfer the force between alternating collars. Symmetry is very important in the collar design. The position of the holes and the location of the collar tab is symmetric with respect to the vertical center line within .001". Without this requirement the collars would not properly lock together and the deflecions would increase. The external key tabs on the collar register the collared coil assembly in the yoke to an angular tolerance of ±0.5 milliradians. The key slot on the inner coil post is to provide for keying of the bore tube to the collared coil assembly.

The diameters of the collar and yoke are dimensioned so that the collars do not bear against the yoke and are therefore self-supporting. The overall assembly is assumed to act thermally as stainless steel. Therefore the difference in contraction between the collar assembly and the iron yoke is 1 mil per inch. The following table, using the previously calculated deflections, predicts the radial gap along the axes in mils between the collar and yoke as the magnet is cooled down and then energized. The value for "collar Δ radius" is the actual radial motion the collared-coil assembly is expected to experience for the condition stated in the table.

Radial Gap Between Collars and Yoke

< Radial dim. in mils - undeflected clearance 4 mils >

	Vertical		Horizontal	
	collar Δ radius	gap	collar Δ radius	gap
R.T. Prestess	1.3	2.7	1.1	2.9
4 K Shrinkage	-6.5	4.9	-6.5	5.1
4 K Energized (energized-RT prestress)	-1.4	6.3	1.4	3.7

Note: Energized gap greater then R.T. gap
Therefore: collars must always be self-supporting

Material Specifications

With the selection of the 15 mm collar design, the stress analysis indicates the need for a high strength stainless steel. Prior experience with CBA indicated that Nitronic 40, a product of Armco Inc., met the strength required and exhibited very low and stable permeability down through cryogenic temperatures. The reason for the need of a low permeability stainless is because the collars also serve as the coil poles. The poles need to be as non-magnetic as possible. A variation in the material's coefficient of permeability of ±0.0003 creates a central field error B_0 of ±1E-4 at low field by effecting the transfer function.[4,5]

Nitronic 40 is covered by specification ASTM A 412 Grade XM-11 and by a preliminary report dated March 1983 from the National Bureau of Standards titled Structural Materials for Superconducting Magnets. The following table outlines the minimum mechanical properties of the material as called for by these specifications and gives some actual measured results.[6] The final column is data from the NBS report on average properties at 4°K. The room temperature yield strength of ASTM A 412 stainless steel is about twice that of conventional 304 and 316 grades of stainless steels and the ratio between the two types increases to about 3.5 to 1 at 4°K.

ASTM A 412 Stainless Steel Mechanical Properties

	Minimum Specified	Actual Measured	4°K Average
UTS	100 ksi	111-115 ksi	240 ksi
0.2% YS	60 ksi	71-73 ksi	180 ksi
Elong. % in 2"	40 %	45-46 %	22 %
Permeability *	-	1.0023	1.0027

* Nitronic 40 measured at BNL

The loading on the collars will cycle over the life of the SSC due to thermal cycles and field strength variations. Assuming a life of 30 years and two cycles per day for each year, the total number of cycles is of the order of 10^4. The number of days of operation per year will actually be less. However, this number does take into account the extra cycles that will occur during the first years due to startup, and during the final years due to wear. Interim results from the NBS report indicate a stress-controlled fatigue life for notched samples at cryogenic temperatures and a maximum stress of 50 ksi to be greater than 10^5 cycles. Several consecutive collars in a collar pack would have to fail before any damage to the coils would be expected.

Measured Results

As of this writing six Design "D" collared magnets have been assembled, three one meter magnets at LBL and three 4.5 m magnets at BNL. All of the LBL magnets have been tested along with two of the BNL magnets. Additionally, several six inch long, single collar pack models have been assembled at both labs. From all these assemblies, measurements of collar deflections have been taken to compare with those calculated.

Room temperature measurements of the collars loaded by the coil prestress give deflections that are greater than those predicted. Part of the reason for this difference is due to the clearances and tolerances that are neccesary to assemble the actual collars that the model did not allow for (ie. holes, key slots, tabs). This accouts for 2-3 mils radially on the vertical axis and somewhat less on the horizontal axis. The other part of

the reason is due to the conditions under which the collars are loaded. However, this does not account for all the differences and therefore it is suspected that modifications to the computer model itself need to be made.

Cryogenic measurements of collar deflections on the magnets tested at LBL does seem to agree with those predicted.[7] Both the relative shape of the deflected collar and the magnitude of its deflections between the un-energized and energized states matches the calculated numbers. The table below summarizes these results from both BNL and LBL. Note the differences in the measured deflections due to room temperature prestress between BNL and LBL assemblies. This will be discussed later.

Radial Collar Deflections (mils)

	R.T. Prestress		4°K Energized	
	Measured	Calculated	Measured	Calculated
	BNL LBL			
Vertical	3.5 / 7.0	1.3	~1.1-~2.1	~1.4
Horizontal	6.0 / 3.5	1.1	1.6	1.4

The collars from the first magnet tested at BNL have been removed from the coils and remeasured to check for any permanent set. The results show a considerable amount of yielding due to the force applied in the press during keying. The present tooling is not sufficient to support the collars while being pressed and therefore allow the collars to deflect past the elastic limit. The plot below shows the average yielded collar shape along with the average deflected shape of the collars when keyed on the coils for the BNL magnets. The difference between the deflected shape and yielded shape could be considered the actual elastic deformation resulting in values different than those given in the table above.

Measured Deflections of BNL Collars

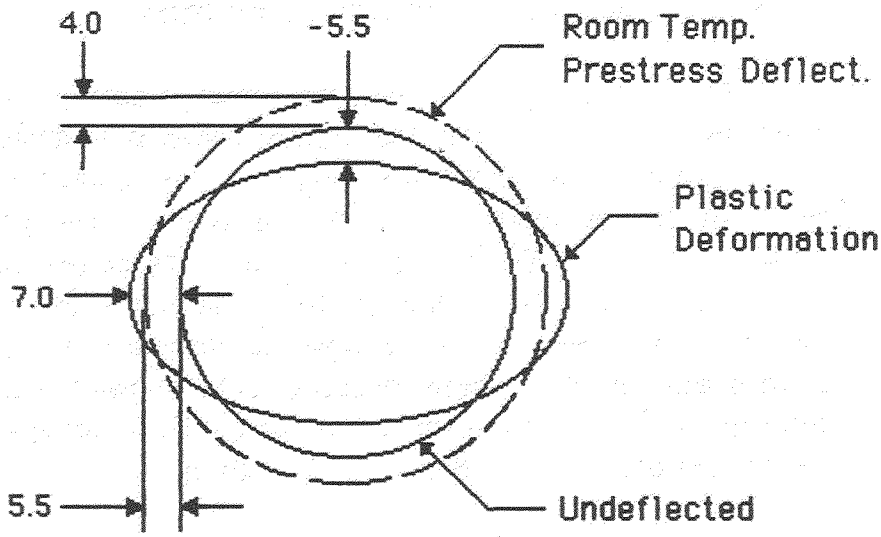

Preliminary measurements from LBL show less yielding in the collars indicating that their tooling provides somewhat better support to the collars. This might explain why their average vertical deflections from prestress loads are greater than those seen at BNL and their average horizontal deflections are less than those seen at BNL. In addition, LBL uses a hard mandrel that remains in the bore of the coils until the collared-coil assembly is placed in the iron yoke. If one uses the difference between the yielded collar shape and the prestress deflections as the actual elastic deflections, than the BNL and LBL room temperature collar deflections compare quite well.

Assembly Experiences

.The assembly procedure and experiences described below are from the 4.5 m Design "D" magnets assembled at BNL. The collar packs are assembled over the coils which have three layers of 5 mil Kapton sheet over them. Between the first and second layer is placed a 4 mil stainless steel strip heater about two thirds the width of a coil quadrant and the full length of the magnet. The bore tube with its trim package is already positioned inside the coils. The assembly is placed into a lower cradle which locks on the vertical key tab of the collars to align them down the entire length. This package is then lifted and positioned on the base of the incremental press. The press has an upper cradle which is identical to the lower cradle except in length. It is the length of nine collar packs, 53

inches. The cradles serve as the fixtures that transfer the load of the press to the collars during the keying operation. The cradles also serve to restrain the collars during loading. Fig. 7 shows a cross section of the collared coil assembly in the cradles and press.

The press is designed to load the collared coil assembly incrementally down the magnet's length. The magnet remains stationary as the top part of the press moves down the length of the magnet guided in tee slots machined in the lower platen of the press. The press is capable of applying up to 36200 lbs. of compressive force per linear inch onto the collar-coil assembly. During the pressing operation with the first magnet, dial indicators were used to measure the deformation of the collars and tooling. These measurements showed that the collars were deformed vertically 20 mils on the radius while being keyed. Horizontally the collars bowed out 5-8 mils on the radius.

Due to the considerable flexibility in the collars and the inability of the tooling to restrain them, it was difficult to achieve the desired prestress in the coils. After the collars are keyed and the press load removed, the prestress measured is a factor of 2-3 times less than the stress measured with the press load on. This means the coil transducers read 18-19 ksi with the press load on and 6-8 ksi with the collars keyed and press load off. While this does not prevent assembly, it is an inefficient operation which causes both the coils and collars to see stresses close to their physical limits. Higher stresses could lead to electrical shorts along the midplane of the coils and excessive yielding of the collars. LBL in their 1 m magnets found that the prestress in the coils after keying was about 60% less than the stress when loaded in the press,[8] similiar to BNL experiences.

In the first magnet, the bore tube was a tight fit inside the bore of the coils. The bumpers and keys on the bore tube were designed to have a radial fit of 0-4 mils clearance. Therefore, when the collars were being pressed, the bore tube itself was bent in where contact was made. Measurements later showed that the tube was dented in about 20 mils where the bumpers were on the top and bottom of the tube. On the sides, the bore tube bowed out somewhat, but slight dents of about 2 mils could be seen where the bumpers were. See Fig. 6 for the bumper locations on the bore tube. Later magnets allow for greater clearance between bumpers and coils.

Further Work

In summary there are two items structurally concerning the collars, each a function of the other, that need to be addressed. The first is how to reduce the difference in the amount of prestress the coils experience between press loading and final keying. The second is how to restrain the collars from yielding during the pressing operation. The finite element model needs to be modified to better predict the collar deflections. Primarily, the case when the collars are loaded in the press needs to be analyzed to determine if it is possible to restrain the collars in such a way as to reduce the prestress losses after keying. This analysis also needs to address the interface between the bore tube and collared coils. This model will need to have considerable more detail than the first. Coil stiffness will need to be varied in order to determine if it has an impact on collar deflections. New data on temperature dependent mechanical properties will need to be input. Forces at quench fields above 6.5 T will also need to be analyzed to determine the deflections and stresses in the collars.

In order to verify the minimum assembly prestress required in the collared coils more data is needed on the prototype magnets. The amount of room temperature stress relaxation over a long period needs to be known since machine construction is expected to take five years. This means the first magnets built could sit at room temperature for five years before use. More data is also needed on the prestress lost in the coils due to thermal contraction. Stain gage measurements should be able to determine this. Stain gages will also be able to determine at what current the coils release from the poles with different levels of assembly prestress.

Work will need to be done on experimental models. A method of restraining the collars on the horizontal axis to prevent any bowing out while still being able to insert the keys into the collars will need to be investigated. One or two collar packs with load transducers can be assembled onto sections of coils. These models can then be loaded and keyed in a modified cradle and press to determine the practicability of solutions for restraining the collars. Several methods of loading and restraining the collars can be tried relatively quickly.

Presently, a total of six 4.5 m magnets and two 16.6 m magnets are to be built at BNL. This will be complemented by several 1 m long model magnets that will be built at LBL and Fermi Lab. This program along with

the analysis work going on in parallel should be sufficient to determine the adequacy of the collars in the Design "D" SSC dipole.

NOTES

1. Morgan, G. H., "The 1 in 1 SSC Dipole with C5 Coils", SSC Technical Note No. 23, Feb. 23, 1985

2. LeRoy, R. J., "Mechanical Properties of SSC Coils at Cryogenic Temperatures", Magnet Division Note - to be written. Data taken April-July 1985. Note describes experimental results and calculations to predict thermal prestress losses in collared coils.

3. Morgan, G. H., "Effect of Varying the Coil to Iron Gap in 1 in 1 Dipoles", Magnet Division Note 114-1, Jan. 7, 1985

4. Private communication with G. H. Morgan

5. Gupta, R., "Effect of the Steel Collar on the Magnetic Properties of SSC Dipole", Magnet Division Note 153-1, Aug. 5,1985

6. Measured data from material certification reports supplied by Armco Electrical Steel Division.

7. Peters, C., et.al., "Design and Performance of 40 mm, 6.5T, Collared, Cold-Iron Model Magnets", Lawrence Berkeley Laboratory, submitted to the 1985 Particle Accelerator Conference, Vancouver, Canada.

8. Ibid.

Acknowledgments

The design drawings of the collars and cradles were done by Vic Scotto whose input was invaluable.

Experimental data on the mechanical properties of the coils was taken by Ed Baker.

Discussions with Mike Anerella provided insight on coil stresses and assembly experiences with the BNL 4.5 m magnets.

Discussions with Gerry Morgan on the magnetic design of the magnet are reflected in the section on magnetic considerations.

Thanks goes to Ralph Shutt for spending the time to review this paper and to offer constructive criticisms.

Discussions and visits with Craig Peters and Ken Mirk from Lawrence Berkeley Laboratory were most helpful in both the design and understanding of the collars.

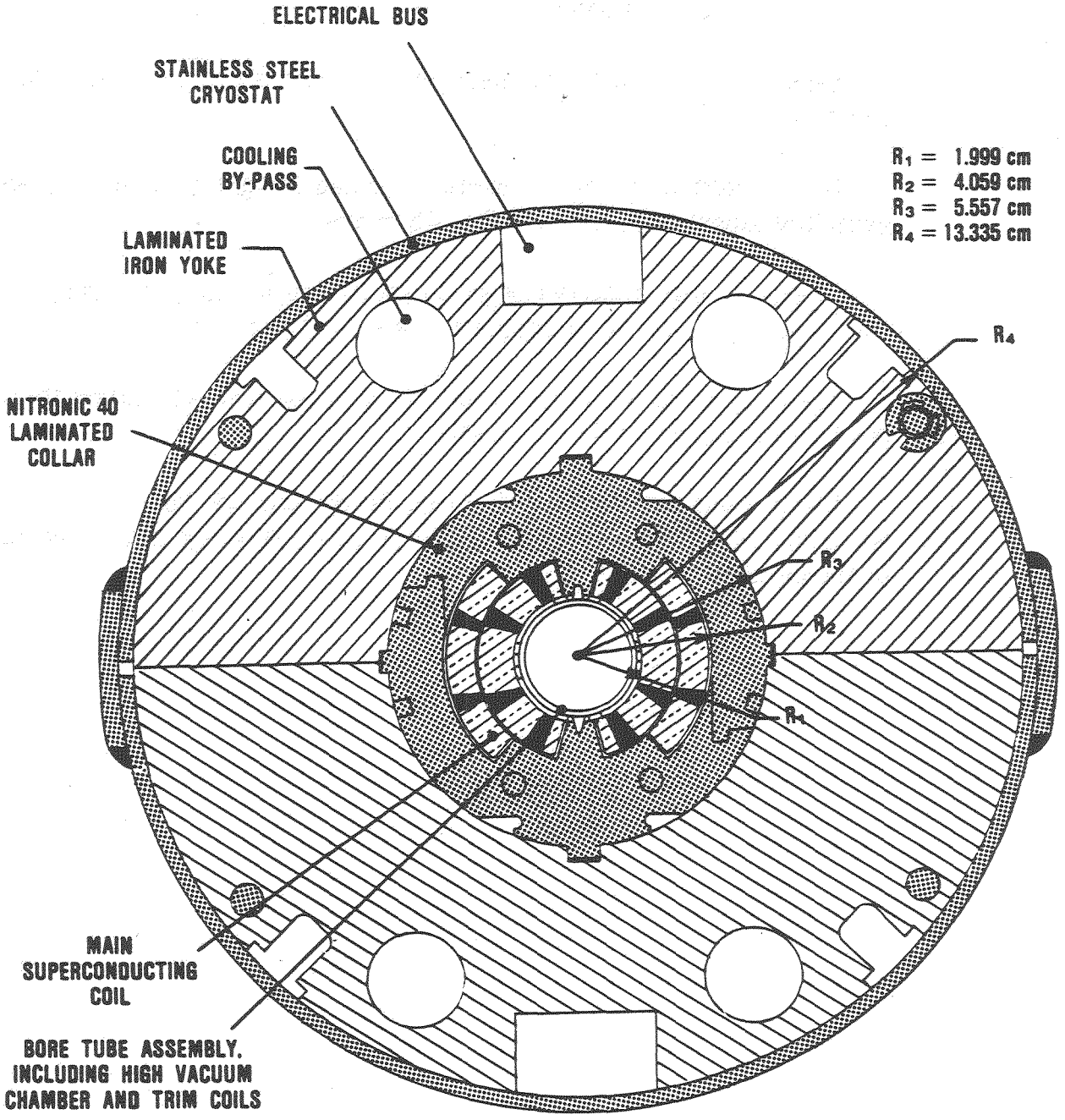
ELECTRICAL BUS
STAINLESS STEEL CRYOSTAT
COOLING BY-PASS
LAMINATED IRON YOKE
NITRONIC 40 LAMINATED COLLAR
MAIN SUPERCONDUCTING COIL
BORE TUBE ASSEMBLY, INCLUDING HIGH VACUUM CHAMBER AND TRIM COILS
R1 = 1.999 cm
R2 = 4.059 cm
R3 = 5.557 cm
R4 = 13.335 cm
R4
R3
R2
R1

FIG 1

SSC 1 in 1 DIPOLE with C5 COILS
LORENTZ FORCES

$B_o = 6.5$ T $I = 6438$ A

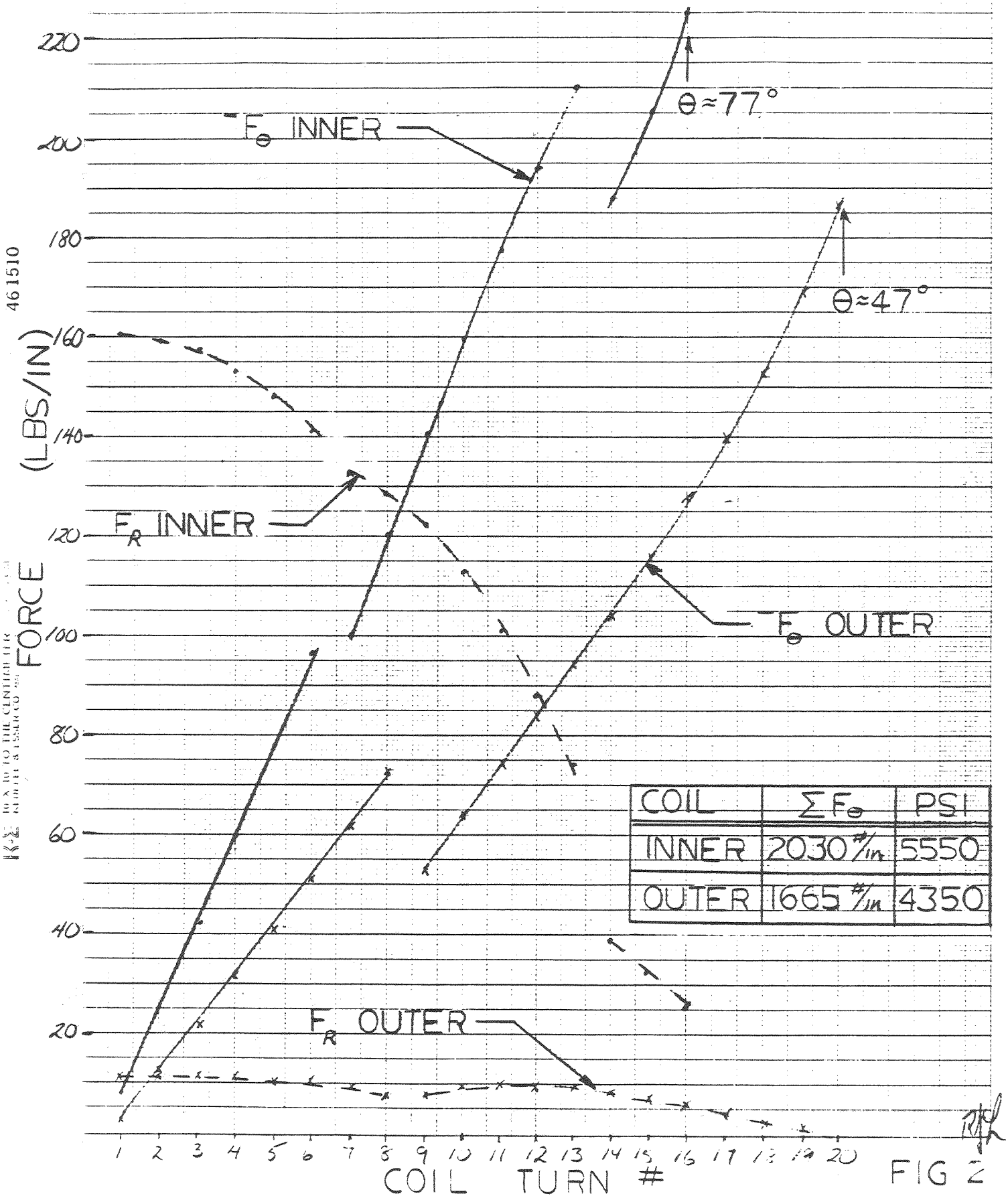

COIL	ΣF_θ	PSI
INNER	2030 #/in	5550
OUTER	1665 #/in	4350

FIG 2

46 1510

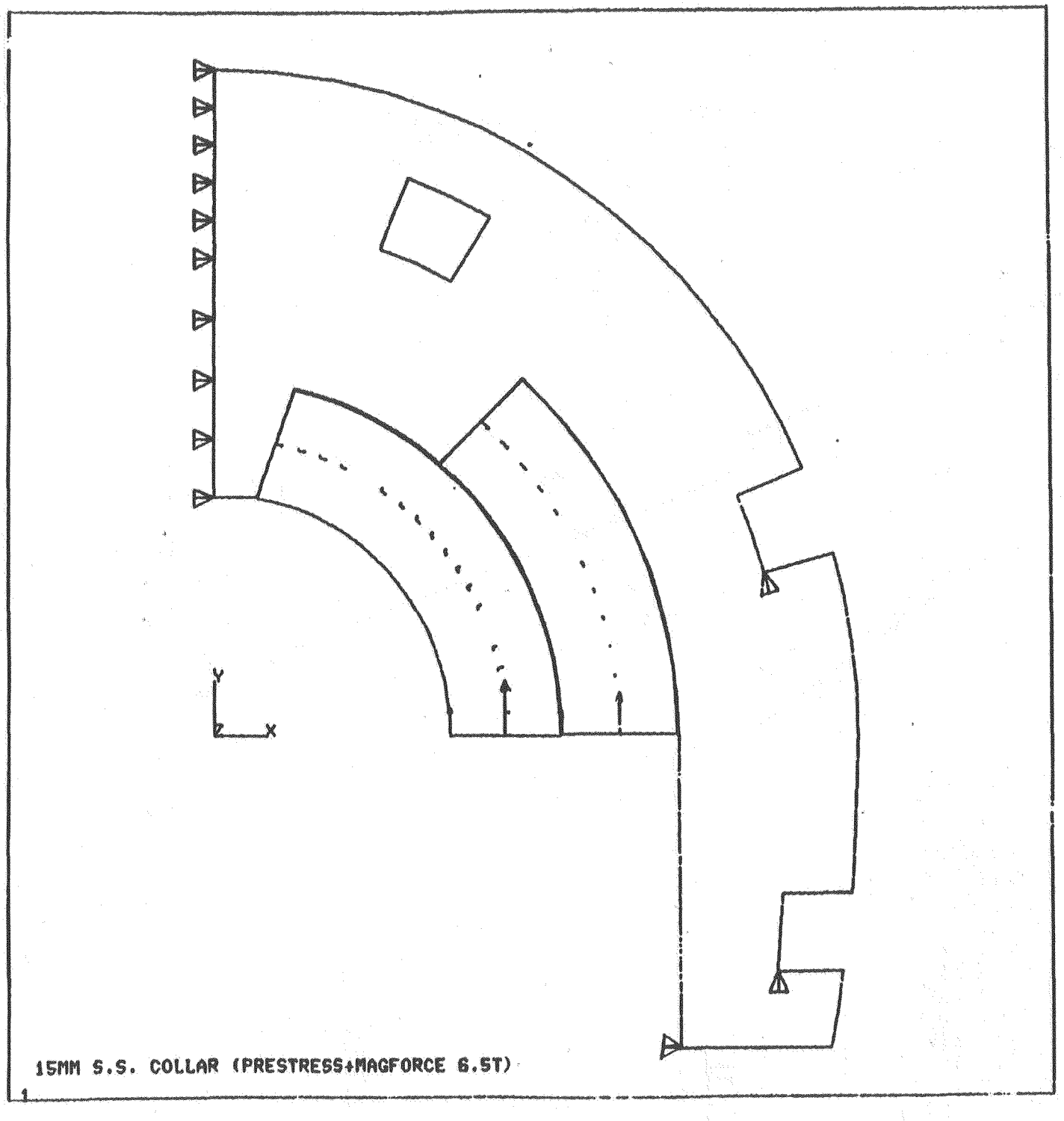

ANSYS
7/31/84
11.2072
PREP7 ELEMENTS
TDBC=1
FBC=1

AUTO SCALING
ZV=1
DIST=1.74
XF=1.05
YF=.584
EDGE

FIG 3

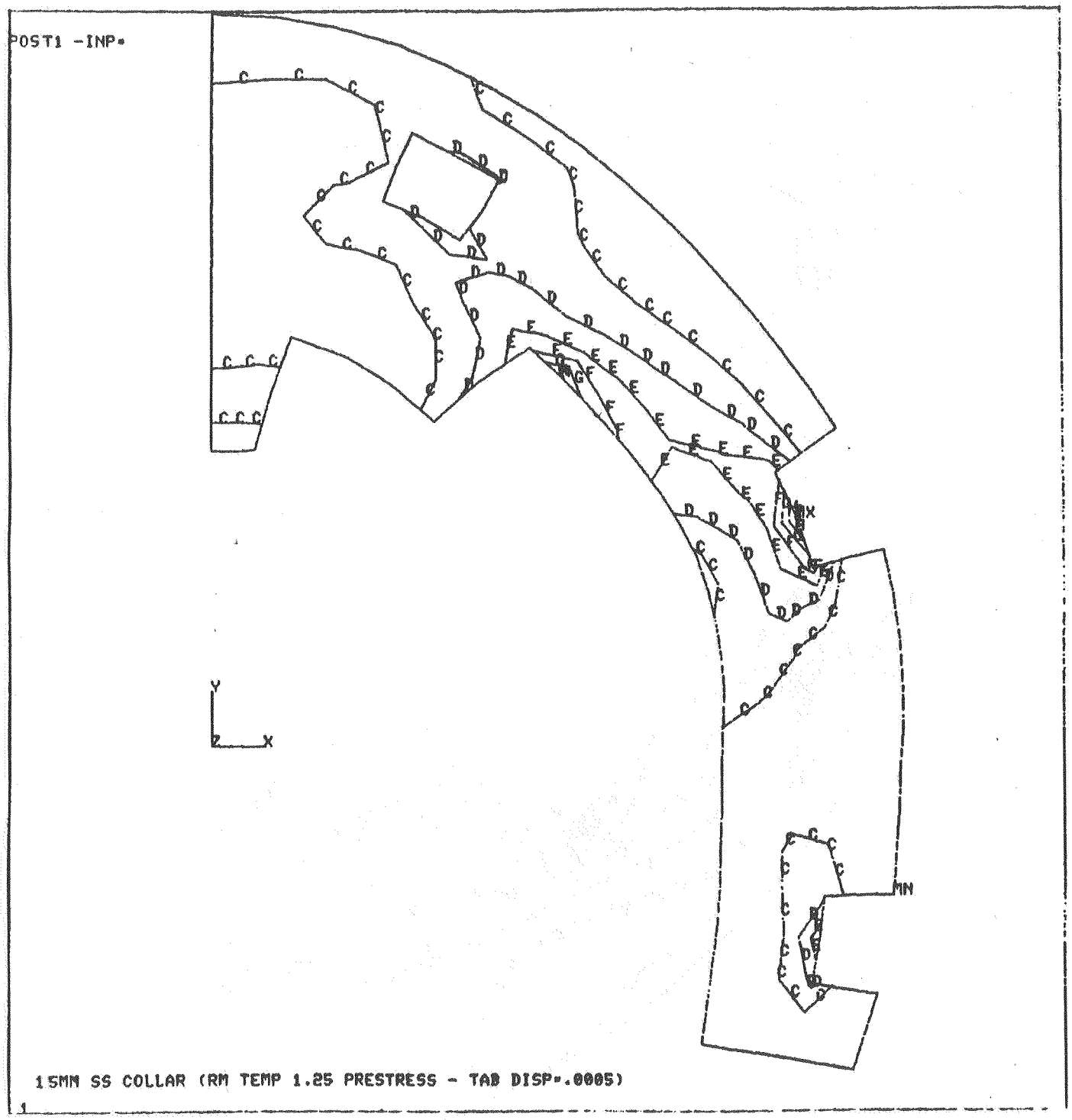
POST1 -INP=
ANSYS
8/20/84
11.1644
POST1
STEP=1
ITER=30
STRESS PLOT
SIGE
AUTO SCALING
ZV=1
DIST=1.73
XF=1.08
YF=.575
EDGE
MX=57780
MN=533
C=8000
D=16000
E=24000
F=32000
G=40000
H=48000
I=56000
MX
MN
Y
Z
X
15MM SS COLLAR (RM TEMP 1.25 PRESTRESS - TAB DISP=.0005)
1

FIG 4

FIG 5

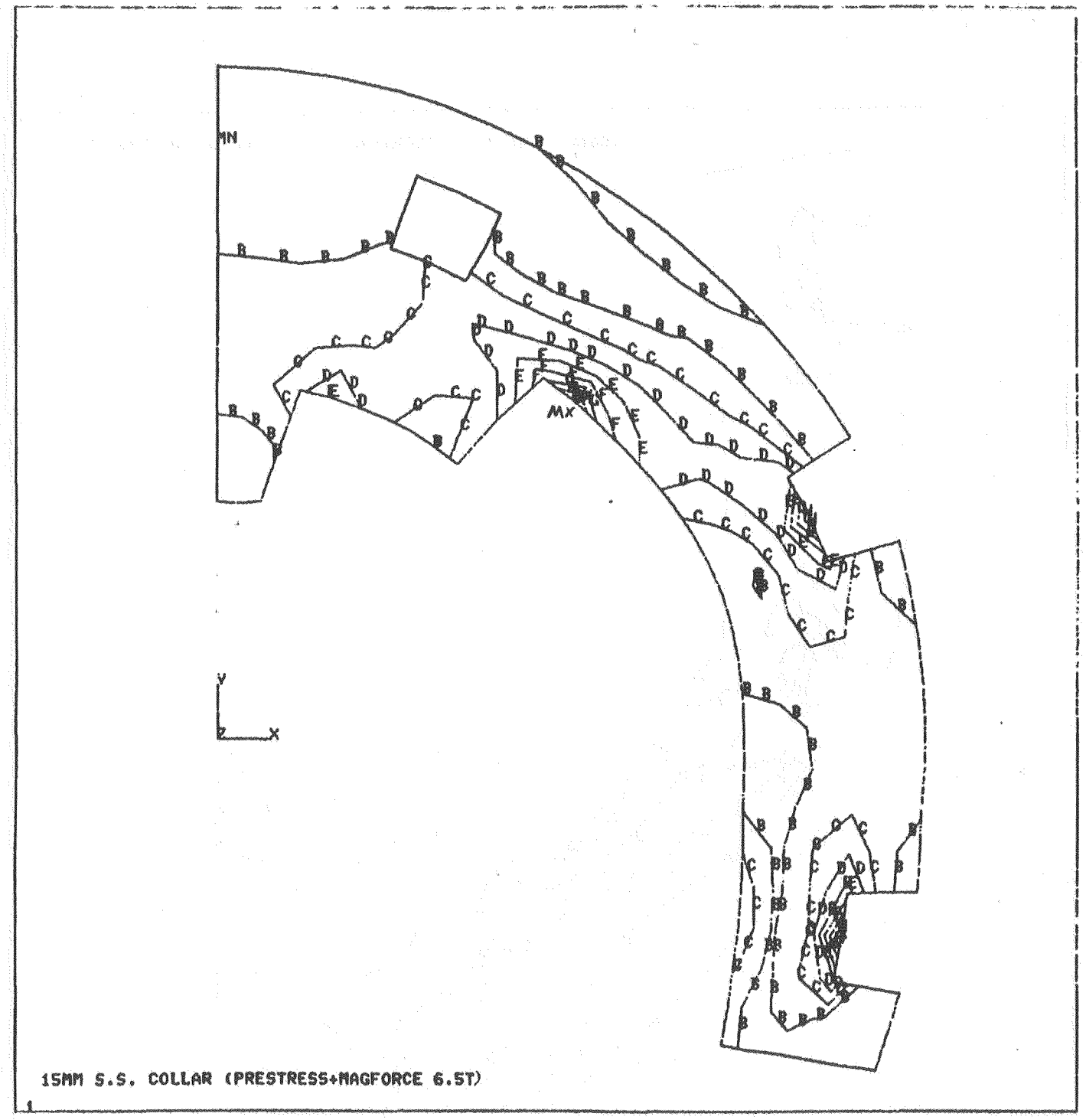

ANSYS
8/22/84
10.5722
POST1
STEP=1
ITER=30
STRESS PLOT
SIGE

AUTO SCALING
ZV=1
DIST=1.73
XF=1.08
YF=.575
EDGE
MX=41611
MN=217
B=5000
C=10000
D=15000
E=20000
F=25000
G=30000
H=35000
I=40000

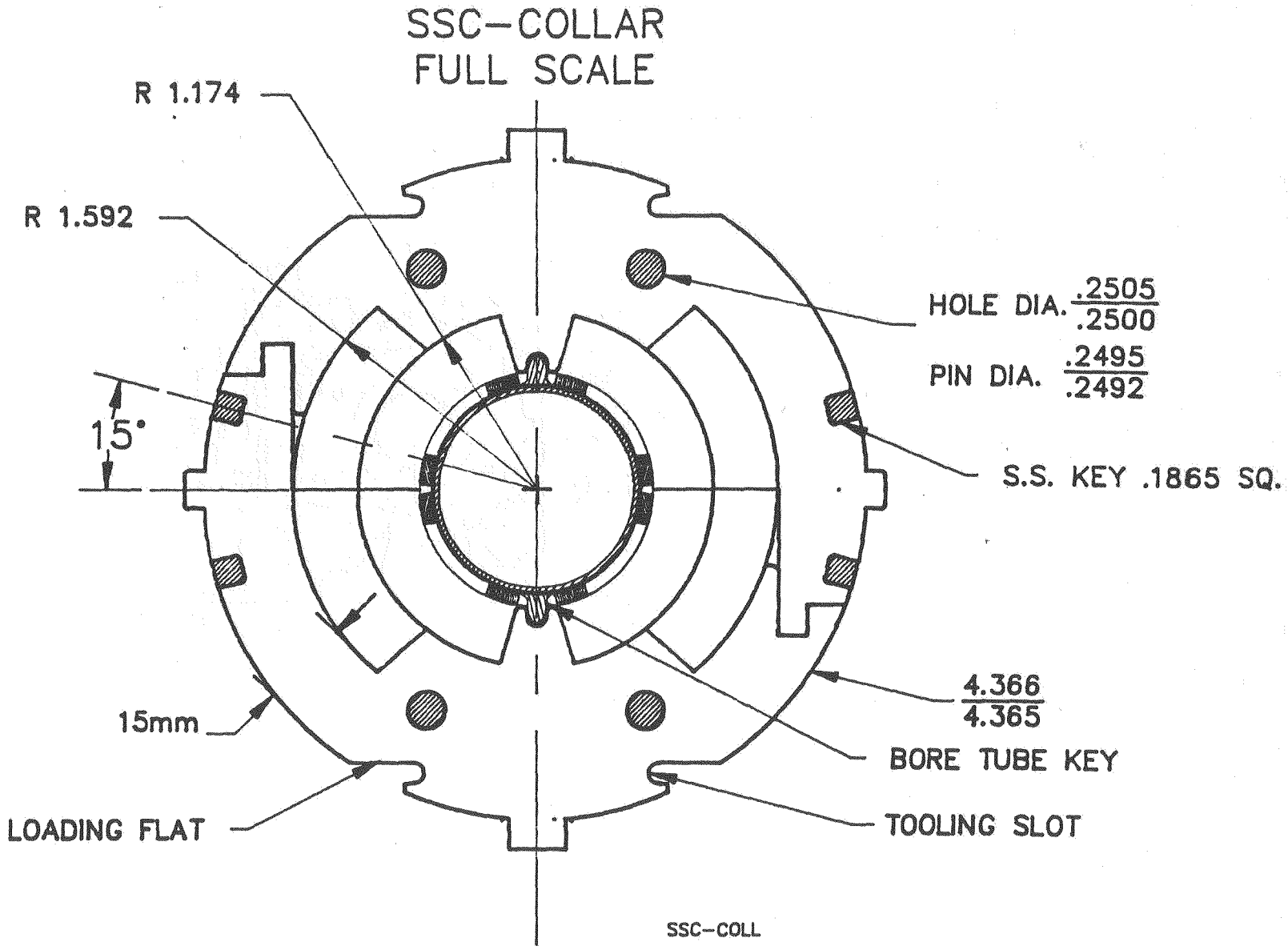
SSC-COLLAR
FULL SCALE
R 1.174
R 1.592
15°
15mm
LOADING FLAT
HOLE DIA. .2505/.2500
PIN DIA. .2495/.2492
S.S. KEY .1865 SQ.
4.366/4.365
BORE TUBE KEY
TOOLING SLOT
SSC-COLL

FIG. 3

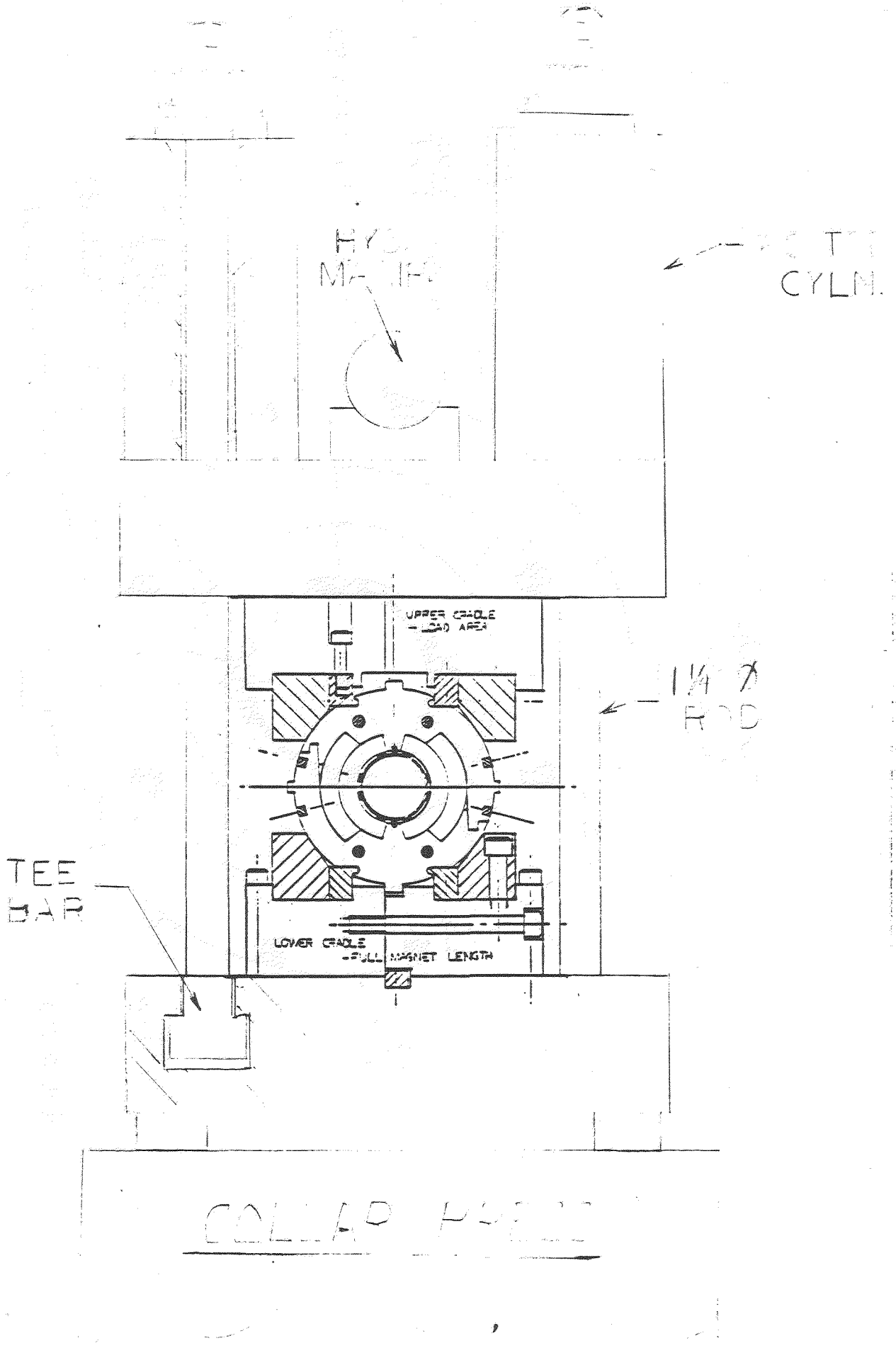

FIG 7

DESIGN AND PERFORMANCE OF 40 MM, 6.5 T, COLLARED, COLD-IRON MODEL MAGNETS*

C. Peters, W. Gilbert, W. Hassenzahl, K. Mirk, J. Rechen, R. Scanlan, and C. Taylor
Lawrence Berkeley Laboratory
University of California
Berkeley, California 94720

Dipole Model Program

Model magnets have been built and tested at the Lawrence Berkeley Laboratory to verify a candidate design for the main bending magnets of the SSC. Construction of this series of dipole models was begun in October 1984 and will be completed in October 1985. To date, three models with collars, C1, C2, and C3, have been completed. Model C1 and C2 have been tested.

SSC Model Dipole

The inside diameter of the magnet winding is 1.574 inches (40 mm), which is the same as anticipated for the SSC itself. The overall length of the magnet is 41 inches and the straight section is 28 inches. The ends of the coils are flared for ease of winding.

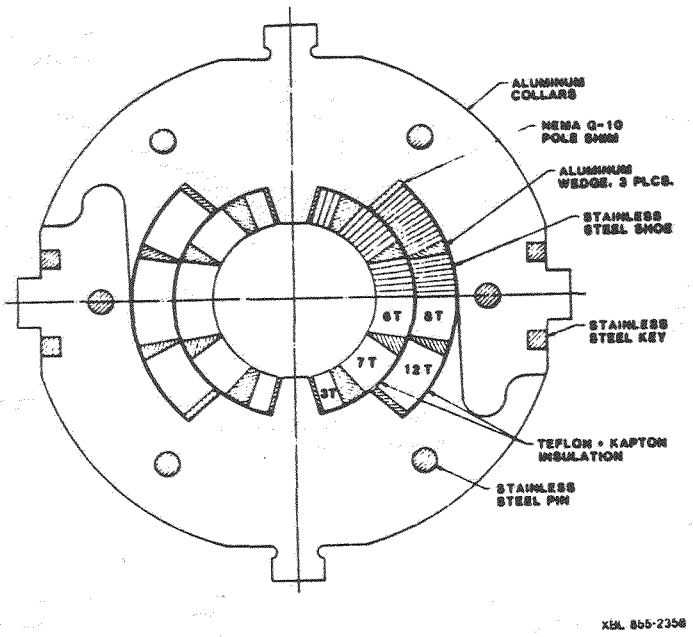

Fig. 1 Model C1 and C3 Collared Coil Assembly

The cross section shown in Fig. 1 has been designated SSC reference design D. It consists of a two wedge, 16 turn inner layer and a one wedge, 20 turn outer layer. Kapton sheets provide insulation between layers and ground plane insulation from coil to collars.

Two flattened "keystoned" cables were developed for this design, described in Table I. The strand Jc (4.2 K, 5T) values for C1 are 2280 A/mm^2 (inner) and 2273 A/mm^2 (outer); for C-2 the values are 2238 A/mm^2 (inner) and 2435 A/mm^2; and for C-3 the values are 2500 A/mm^2 (inner) and 2435 A/mm^2 (outer). The cable is insulated with two spiral wraps of pre-epoxy coated kapton. The inner is 0.001 inch thick and the outer is 0.002 inch thick.

* This work was supported by the Director, Office of Energy Research, Office of High Energy and Nuclear Physics, High Energy Physics Division, U.S. Dept. of Energy, under Contract No. DE-AC03-76SF00098.

Table I

Superconducting Cable Description

Layer	Cable
Inner	23 strands of 0.0318 inch dia. NbTi wire, 1.3 Cu to S.C., 1.68° keystone
Outer	30 strands of 0.0255 inch dia. NbTi wire, 1.8 Cu to S.C., 1.24° keystone

Fig. 1 shows the aluminum collars used in model C1 and C3. Smaller stainless steel collars were used in model C2. Table II tabulates collar description. The collars are assembled into 6 inch long collar packs held together with 0.25 inch diameter pins. Two 0.187 inch square keys on each side lock mating collar packs around the compressed coil assembly. Die-stamped collars will be used in future models.

Table II

Model No.	Collar Mat'l	Collar Radial Thick.	Collar plate Thick.	Fabrication Method
C-1 & C-3	7075-T6 Aluminum	0.955 in.	0.125 in.	N.C. machined
C-2	Nitronic 40 S.S.	0.588 in.	0.065 in.	Laser cut

A "cold" iron yoke provides alignment of the collared coil assembly and magnetic flux return. The machined yoke blocks in the 28 inch center section are iron and the yoke blocks housing at the ends are aluminum. The yoke blocks are pinned to stainless steel assembly plates and the top and bottom yokes assemblies are bolted together with aluminum tie rods.

Due to the difficulty in forming cylindrical coil ends, the coil ends have been flared to a modified conical shape. This design satisfies the mechanical, electrical, and magnetic requirements for the magnet end. The overall end length is 6.12 inches and maximum diameter is 5.10 inches. Maximum conductor stress is reduced by increasing the conductor "hardway" bend radius in the end (i.e. bending in the plane of the cable flat face). This radius is larger than the flat cross section radius by 95% and 47% in layers 1 and 2, respectively.

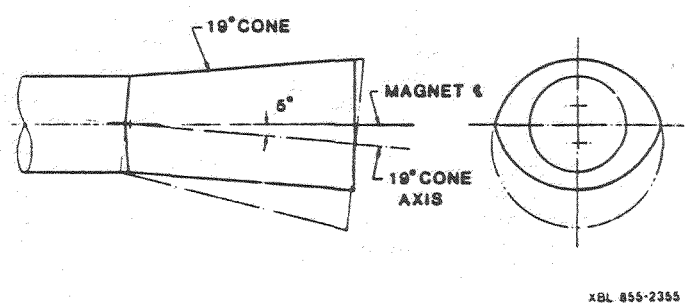

Fig. 2 Magnet End Geometry

This shape also is very well suited for the coil forming process. Without additional clamping or support, the coil ends hold this "tilted" cone shape. In other words, the cable likes this shape. This minimizes motion and chafing of the cable during subsequent compression and curing. This permits winding the coils without additional turn to turn insulation in the ends. No electrical shorts occurred, in construction and testing of 3 dipole models. Finally, the gentle bending of the cable in the ends permits the assembled coils to be relatively free of out of position and poorly clamped strands.

Magnet Construction

Coil Forming

Prior to coil winding, the inner and outer cable were each accurately measured. For these initial models, correction "shims" of NEMA G-11 were then placed in the coil during winding to compensate for real cable size and to maintain the correct position of each conductor block. The cable is wound onto aluminum forms. At the ends, it makes a turn around a NEMA G-10 pole piece. The coils are compressed and heated in a curing fixture at 10,000 psi and 150°C, for about one hour. The conductor in the ends is compressed at the mid-plane but not axially toward the magnet center. After curing, each coil with its permanently affixed end pole piece was measured under load. Coil modulus after curing during its first compression cycle between 6,000 and 10,000 psi for the inner and outer coils was 1.38×10^6 psi and 1.15×10^6 psi, respectively.

Coil Assembly

The four cured coils were assembled onto a collapsible assembly mandrel. The coil ends were aligned with pins on a machined conical end form. This form also provided internal support. The coil ends were held down by an overwrap of 0.010 inch thick Kevlar braid. Teflon tape (0.002 inch thick) was butt wrapped over each entire layer, including the ends. Formed Kapton insulation pieces were then placed over each layer for layer to layer and coil to ground insulation. The Kapton pieces interleave at the magnet mid-plane. One significant difference between the three dipole models constructed was the thickness of Kapton between layers. Model C-1 and C-3 had no Kapton between layers and model C-2 had 0.015 inch of Kapton between layers. It appears that the Kapton between layers of model C-2 contributed to its considerable loss of prestress upon cooldown (see Fig. 4).

Collaring

Prior to assembly, each of the four molded coils were measured in a compression fixture. These measurements were used to predict dimensions of pole shims to be used during assembly. Typically, due to the deformation of the collars and plastic components, a trial collaring of a 4 inch-long section was required. An adjustment was then made to the predicted pole shim thicknesses to achieve correct assembled coil pressures. The remaining collar packs were then assembled, two 6 inch long packs (12 inches total) to each side of center. The collars were assembled with a stainless steel shoe (0.024 inch thick) between the outer layer and the collars. During collaring the collars slide against the shoe rather than on the Kapton ground plane insulation. Typically the maximum pressure on the coils during collaring was about 2.5 times the pressure remaining after collaring. In other words, as the collaring press is released and the collars begin to support the coil force, the coil pressure drops by 60%. Collar deflections after collaring are shown in Table III.

Yoke Assembly

The collared coil assembly is transferred to the yoke assembly. A tapered insulator is fit over the coil ends. In the assembly, the end aluminum yoke blocks and tie rods provide the clamping force to compress the coil ends. The iron yoke blocks in the center straight section only position and align the collared coil to the iron center but do not provide any clamping. All coil to coil splices are made externally to the magnet ends.

Magnet Test Results

Instrumentation

Coil pressure data was obtained using strain gages in the center 4 inch-long collar pack. A portion of the collar plates were cut away and replaced with a block mounted with strain gages as shown in Fig. 3. The gages were calibrated prior to collaring the real magnet coils and were found to be insensitive to diameter changes and load applied to the other layer.

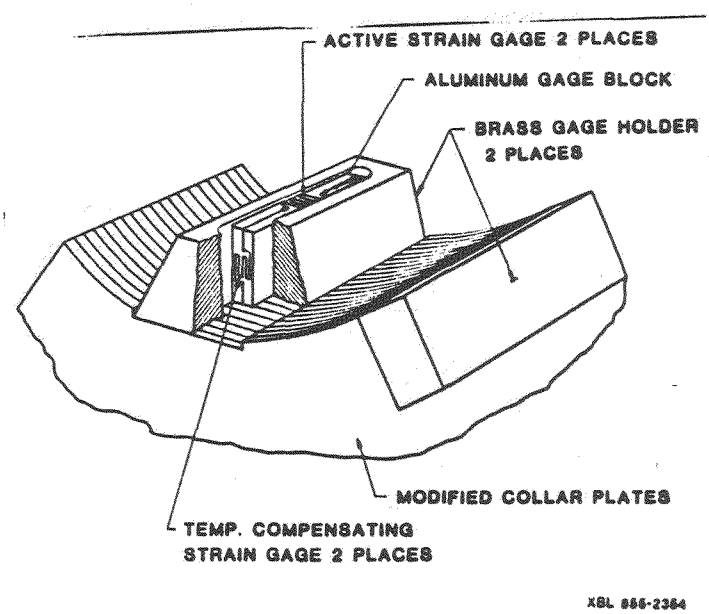

Fig. 3 Pressure Gage Arrangement

Four coil position indicators (CPI's) were installed on the iron yoke assembly as a means of measuring collar position relative to the yoke during operation. Each CPI uses a cantilevered beam with 4 strain gages. The iron yoke with the 4 CPI's was set up and cooled to 77 K for calibration. A second test found that the CPI's accurately predict the thermal contraction of a mock aluminum collar installed in the yoke.

Collar Deflections

Collar deflections are summarized in Table III for assembly and cooldown and in Table IV for deflections during operation.

Coil Pressure

The increase in coil prestress in model C1 upon cooldown, seen in Fig. 4, as opposed to the loss of prestress in model C2, can be attributed largely to collar design and material. The large loss of prestress in the inner layer of C2 is further magnified by the radial thermal contraction of the Kapton insulation between layers in model C2. During operation, Fig. 5 shows that coil pressure at the poll of each layer of Model C1 decreases with successive quenches. After sufficient training, the coil pressure is reversible. This behavior reflects the presence of friction and the somewhat plastic nature of the coils.

Table III

Measured Collar Diameter Deflections during Assembly and Cooldown

Values are change in collar diameters x 0.001 inch and are positive for increasing diameter.

Model # & Collar Type	Undeflected Collar		Collared Magnet 300 K	Collared Magnet 4 K
C-1 Aluminum 25 mm	Vert.	0	+8	-13
	Horiz.	0	+2	-19
C-2 Nitronic 15 mm	Vert.	0	+5	-10
	Horiz.	0	+6	- 8
C-3 Aluminum 25 mm	Vert.	0	+10	
	Horiz.	0	+6	

Table IV

Measured and Predicted Collar Diameter Deflection During Operation

Values are change in collar diameters x 0.001 inch and are positive for increasing diameter. Values in ( ) are predicted deflections.

Model # & Collar Type	Oamps.		3000 A	6000 A	8000 A
C-1 Aluminum 25 mm	Vert.	0	-0.5	-1.5(-3.2)	-2.7
	Horiz.	0	+0.3	+0.8(+1.6)	+1.8
C-2 Nitronic 15 mm	Vert.	0	-0.7	-2.3(-2.8)	
	Horiz.	0	+0.6	+3.3(+2.8)	
C-3 Aluminum 25 mm	Vert.	0			
	Horiz.	0			

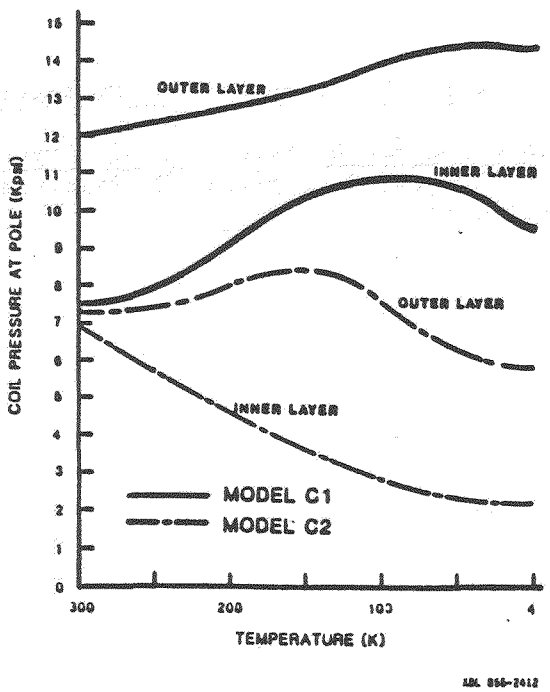

Fig. 4 Model C1 and C2 Coil Pressure During Cooldown

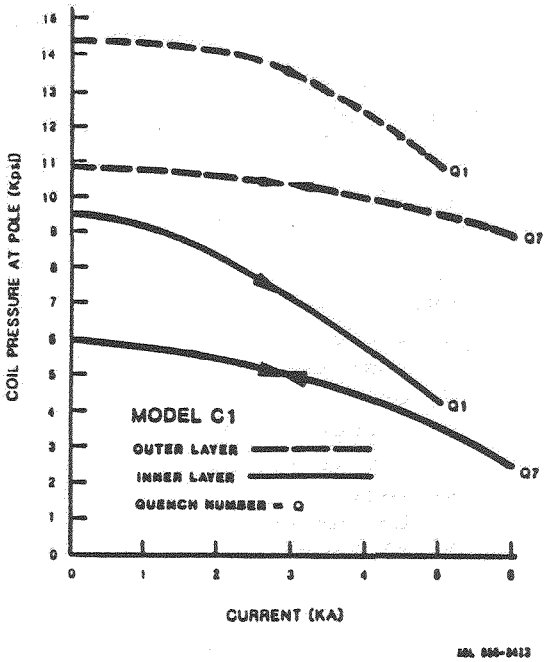

Fig. 5 Model C1 Coil Pressure During Operation

Training

The training behavior of Model C1 is shown in Fig. 6. The first quench occurred at 5.1 tesla and 6.1 tesla was achieved on the fourth quench, which is a rather good training curve. The magnet was warmed to room temperature and recooled to 4.4 K, training was resumed. Some of the memory was lost. In He II, 1.8 K, training to 8 tesla was very rapid. Short sample performance was achieved.

Training of Model C2 was excellent; 5.5 tesla on the first quench and 6.0 tesla on the second. This data was taken in a short preliminary test with a more extensive test program underway.

Magnetic Field Measurements

Both magnets' magnetic fields were measured with our rotating magnetic pickup coil system. Both the fields from transport current and from magnetization effects agree with our calculations.

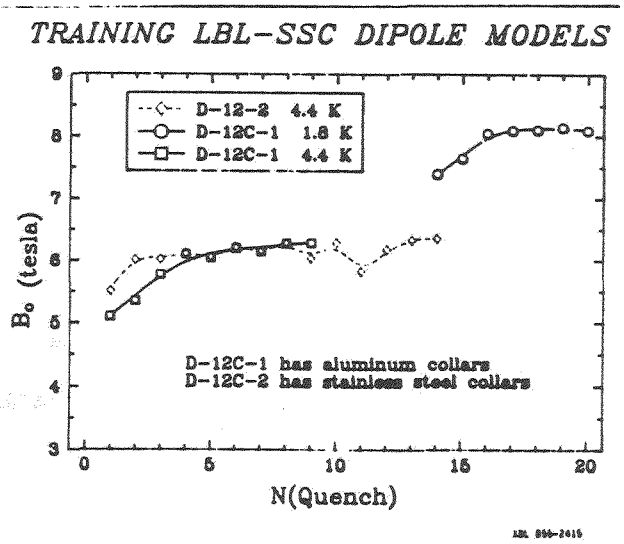

Fig. 6 Model C1 and C2 Training Behavior