Fermilab

SSC-N-8
TM-1289
0102.000

OBSERVATIONS ON LEP WITH A VIEW TO SSC

T.E.Toohig
November 23, 1984

From 24-29 October 1984 a visit was made to the LEP project at CERN with a view to extracting from the LEP planning and experience what might be useful in planning an SSC. With a circumference of 26.7 km, in a reasonably densely-populated area outside the boundaries of the CERN site, LEP already faces most of the problems of environment, public relations, maintenance and operation that will be faced by an SSC project.

In the following nine sections what was seen as relevant information is presented under the headings of:

1. Radiation Protection,
2. Heating, Ventilation, and Airconditioning,
3. Electrical Power Distribution,
4. LEP Experiments/UA1, UA2,
5. Civil,
6. Infrastructure Installation,
7. Survey,
8. Safety,
9 LEP Controls.

Each report lists the CERN individuals who generously provided their insights and help.

This report presupposes a good deal of information contained in the LEP Design Report, CERN-LEP/84-08, Vol. II, The LEP Main Ring.

DRAFT

T.E.Toohig
11-12-84

SSC/LEP VISIT REPORT 1

RADIATION PROTECTION

Graham Stevenson and Anthony Sullivan with Lorenzo Resegotti

I. Radiation Considerations for the Large Hadron Collider

An environmental impact statement has been prepared for LEP used as a Large Hadron Collider. In addition, an internal report (TIS-RP/IR/84-20) has been prepared which analyzes the various factors that would be relevant to radiation protection for a large hadron collider. This report is a good general treatment relevant also for the SSC. The main consequences of LHC operation would be that access to the klystron galleries, which are at tunnel level, would have to be more restricted. The experiments are self-shielding for e^+e^- operation. It would be difficult to add shielding in the present experimental area designs. It is stated that, if an LHC were developed, new shielded experimental halls would be built at the remaining four (of 8) collision points.

II. Muon Dynamics and Shielding

The CERN group has updated muon calculational programs based on a Fermi-Angus approach to study the muon problems up to 10 TeV from the LHC. They use a biased algorithm to speed up the calculations. The results for muon ranges are in agreement with the detailed calculations of VanGinneken. Ralph Thomas at Berkeley has a copy of this program. They find that the maximum spread of the muon cone is 25 meters. The only one who has updated the Keefe/Scolnik calculations which include the

accelerator lattice is N.Mokhov from Serpukhov. He has carried out the calculations for both the Tevatron and UNK. (He will be at Fermilab for six months beginning in October.)

III. Hadron Cascades and Energy Deposition

Ranft has produced a new source code which is being generally incorporated into the hadron cascade programs. CERN has married the new source to a new cascade code for energy deposition. The results from the new calculations are less pessimistic than the older calculations of VanGinneken/Mokhov.

IV. Electron Acceleration in Hadron Machines

They are encountering severe radiation damage problems in attempting to adapt the PS and SPS for electron acceleration for LEP. The synchrotron radiation problem is so severe that it is necessary to limit the electron time in the SPS even after taking measures to smooth the vacuum tube.

V. P-Bar Source

The p-bar source is the most severe radiation problem they have to deal with at CERN. The levels are 10R/hr at one meter a day after shutdown, with 3-4 times that immediately after turn off. The leads for the lithium lens last ∿1/2M pulses, so remote handling facilities will have to be provided to change them.

DRAFT

T.E.Toohig
11-12-84

SSC/LEP VISIT REPORT 2

HEATING, VENTILATION, AND AIR CONDITIONING (HVAC)

Alain Guiard-Marigny

I. Heat Transfer

Water, rather than air, will be used for heat transfer. 6000 m^3/hr of raw water is drawn from Lake Geneva via the SPS and discharged, via SPS, into the Rhone River. 115 m^3/hr of this is consumed in the cooling towers. The LCW system holds 12,000 m^3. There will be 28 km of air ducts in the ventilation system.

The chilled water system operates at 5°-6°C. It is a closed system with storage capability, cooled from the raw water in the cooling towers at each of the even-numbered major accesses. The chilled water circulates to the tunnel level for air conditioning, cooling electronics racks, etc. (see Fig. 2.1). The ΔT in this system will be 6°-12°C. There is a second level of chilled water, which is a glycol system at 1°C. This is used for dehumidification. The LCW system is cooled to 24°C with 22°C on the supply side. The ΔT will be $\sim$10°C.

II. Ventilation and Heating

The ventilation requirements are set by the regulations of the Host States. The system must provide 30 m^3/hr/person or two air changes/hour. The maximum air velocity with personnel present must be 0.5 m/sec. In addition to these requirements, to minimize corrosion, the tunnel will be maintained at a relative

humidity of <60% with a dew point ≥12°C, which is the ground temperature. A maximum air purge of four air changes/hour will be provided. The 3-4 year installation period will be used to warm up the tunnel and change the dew point. During this period they will install the permanent elements of the HVAC systems, though partly in a temporary fashion until the buildings to house them are complete (the SU buildings). The intention is to have the tunnel temperature be 17°-19°C when the machine is not operating, and 22°-26°C when it is operating during the first phase, (55-60 GeV) beam.

III. Test Data from the Reconnaissance Tunnel

In measurements in the reconnaissance tunnel the tunnel wall was found to be 11°-12°C. They inserted sensors into the wall to a depth of 1m and found that with a source in the tunnel of 16kW/100m there was a temperature rise of 1°C at 50 cm into the rock after several hours. Point heating worked better than strip heating in raising the rock temperature.

IV. Separation of Ventilation Systems

Because the volumes, configurations, and operational requirements are radically different, separate ventilation systems are provided for the tunnel, the accessible machine equipment areas at tunnel level (e.g. klystron galleries), and the experimental areas (not unlike Fermilab where the tunnel and experimental area HVAC systems are isolated from one another).

For the tunnel appropriately conditioned air is forced in at even-numbered access points and forced out at odd-numbered points. For the accessible equipment areas air is forced in and diffuses

out. For the experimental areas air is forced in through the personnel shaft, providing positive ventilation in the elevator "safe zone." The outlets in the hall are down low
The air is then drawn out through the equipment shaft with exhaust inlets at the peak of the hall to pick up any accumulation of noxious gases. The exhaust is filtered before being released to the atmosphere. These systems are illustrated in Figs. 2.2, 2.3, and 2.4. The experimental area ventilation system does not take care of special gases associated with the detector, e.g. argon or the newer hydrocarbons. Provision for these is considered part of the detector and must be designed in as part of the experiment.

V. Control and Monitoring/Prototyping

The HVAC systems, at least those required for personnel safety, must operate continuously, 365 days/year. For this reason it operates on a separate monitoring and control network from the accelerator system proper. This system is provided with a battery backup. It reports to the LEP control room, but has a gate there to the general site surveillance system.

They are putting considerable effort into prototyping an HVAC system with its controls at present. The systems arc to operate under local microprocessor control, interfaced to the services network. No local analog readouts are being provided, but a single TV display is provided in each SU building. Units have an identifying bar chart posted on them, and a maintenance person can read the unit's parameters, e.g. temperature of water in a chiller using a simple bar chart reader connected to a little Epson Geneva.

This readout is operational now. They are telemetering meteorological data back to CERN at present from each of the future shaft locations to determine the parameters for the local μp controllers.

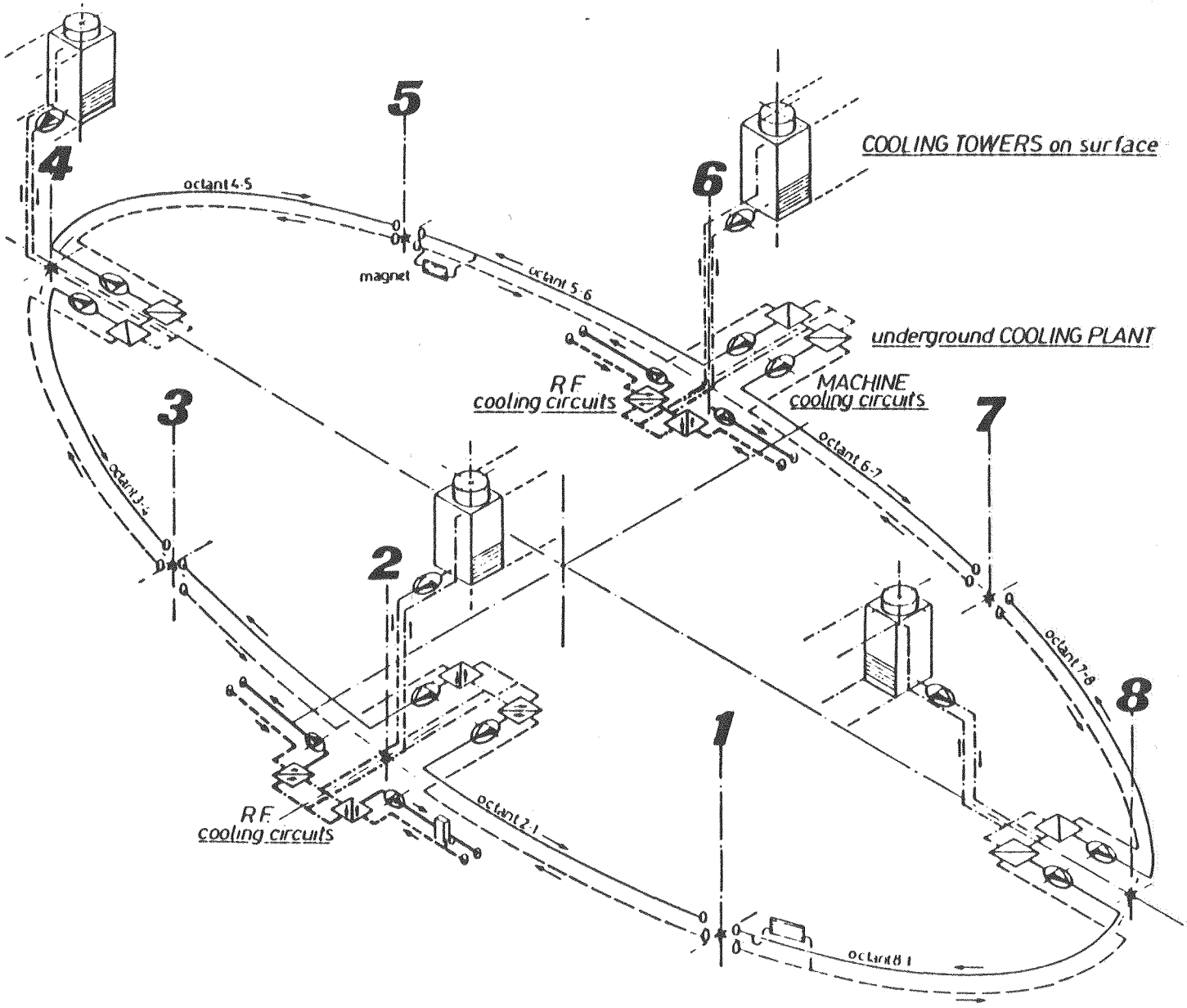

Fig. 2.1 Layout of machine cooling circuits

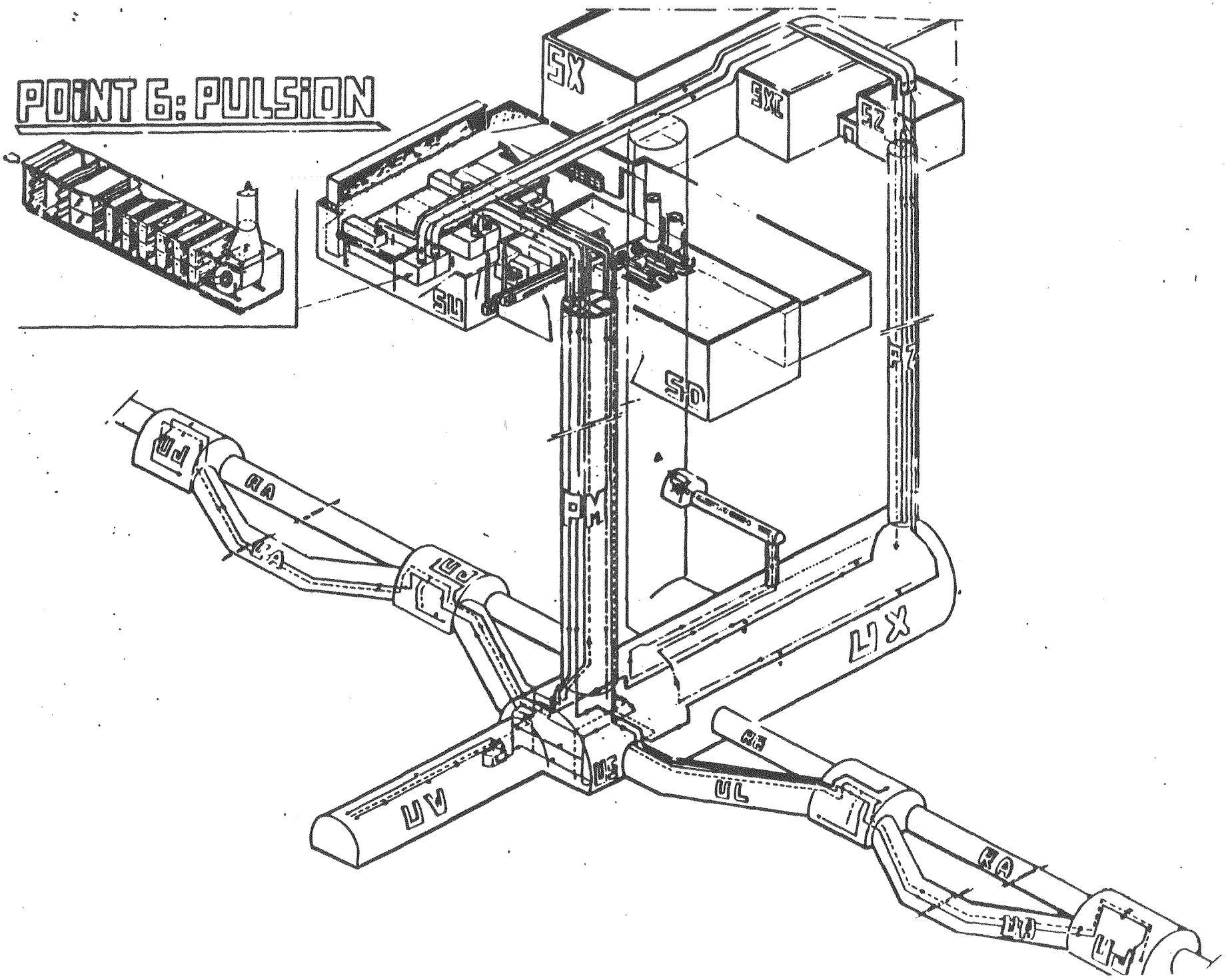

Fig. 2.2

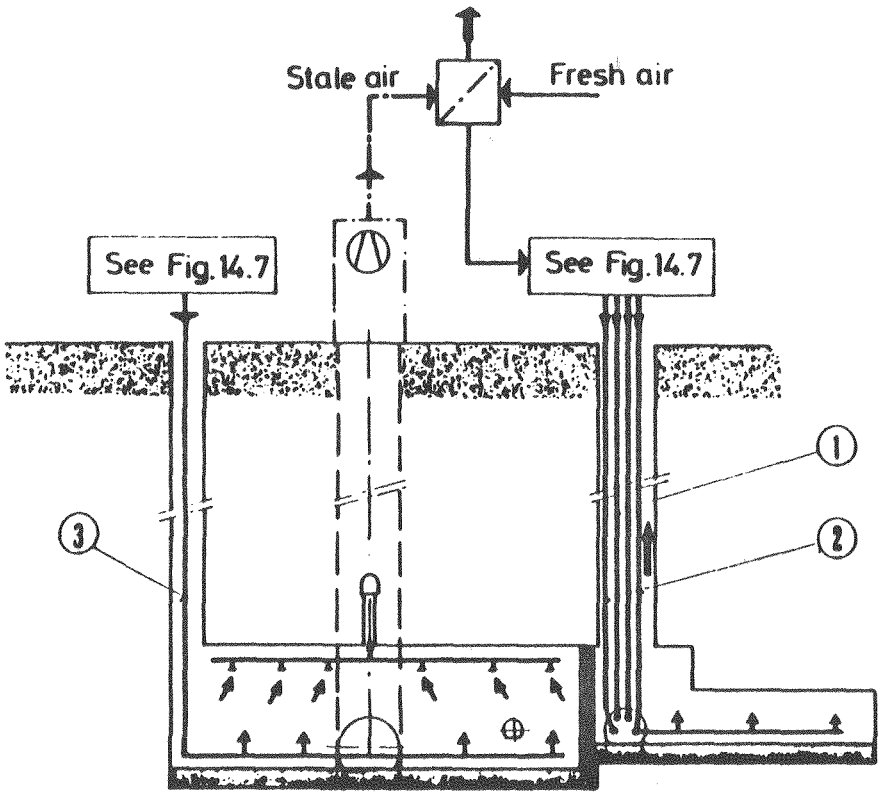

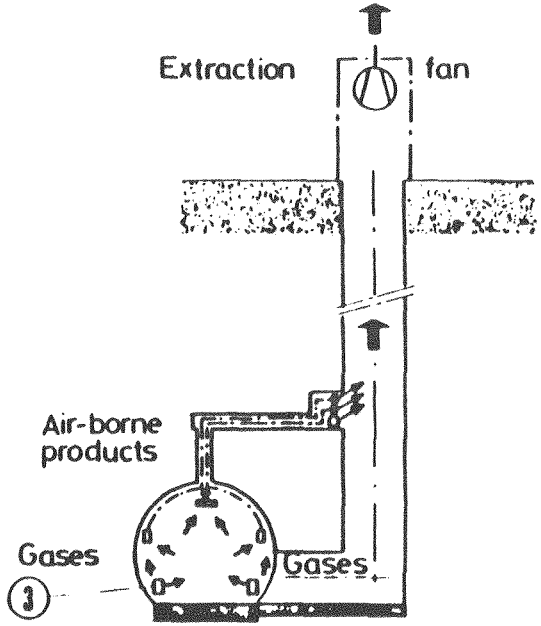

Air treatment of ;

1) Machine tunnel

2) Accessible technical areas

3) Experimental areas

Fig. 2.3 Schematic inlet and exhaust arrangement for the ventilation of experimental areas

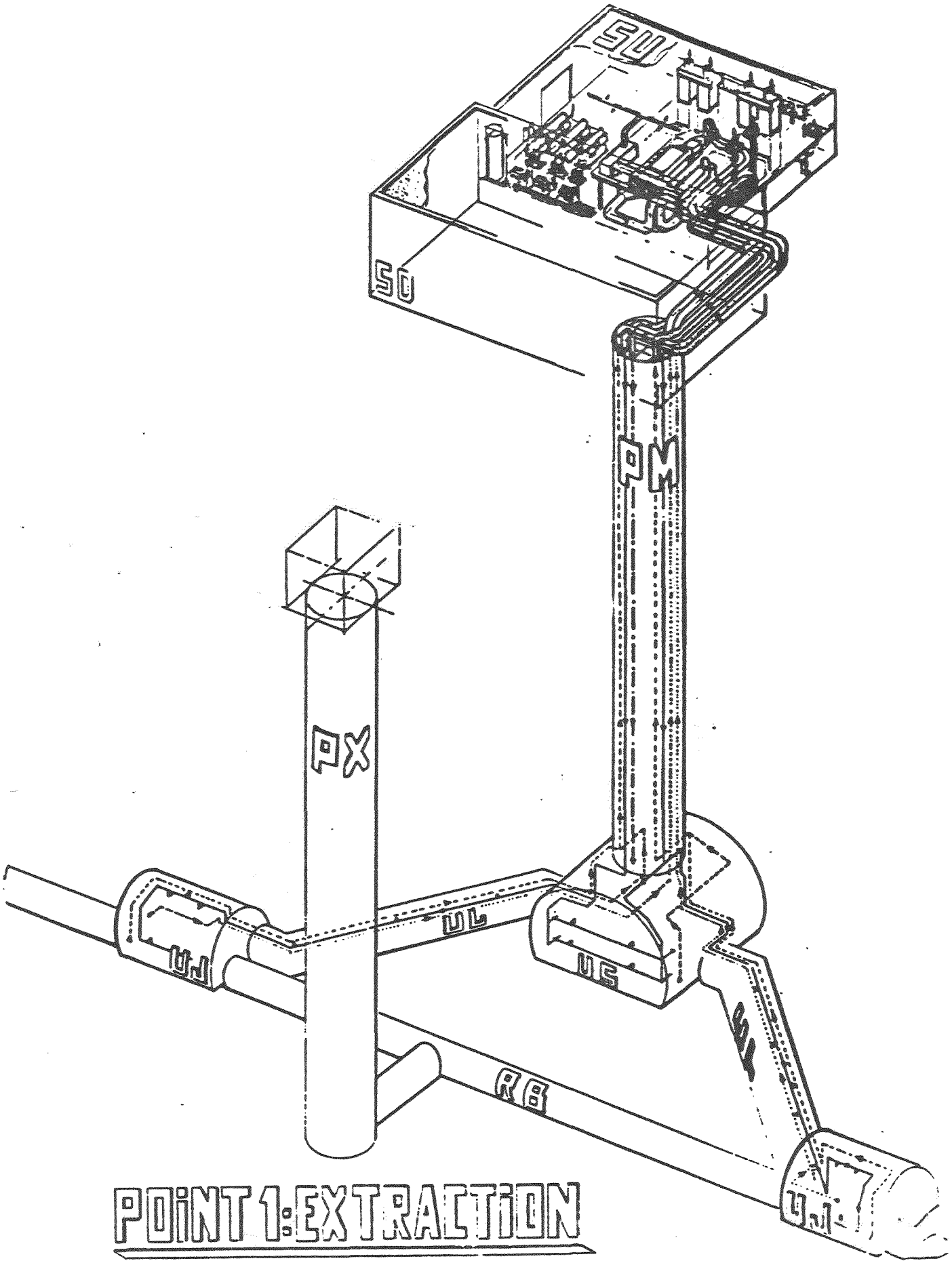

Fig. 2.4

DRAFT

T.E.Toohig
11-13-84

SSC/LEP VISIT REPORT 3

ELECTRICAL POWER DISTRIBUTION

Olivier Bayard

I. Network Reliability and Backup

The primary LEP power source is the network of the Electricite de France (EDF). This is backed up by a lower capacity line from the Swiss network. In case of failure of the EDF feed there is an automatic load transfer to the Swiss feed with programmed load shedding to match the lower capacity of the Swiss line. A third level, which is not automatically transferred, is provided by the aerial lines installed for the construction phase. These are left in place, but require manual switching.

II. Layout and Installation

The primary feed is a single 18kV loop around the ring which is laid in a trough in the tunnel with an aluminum protective cover over it. The choice of 18kV was dictated by the cost of switchgear, which is expensive above the 20kV level. 680kVA dry transformers are installed in stub tunnels at the two intermediate equipment locations between major accesses. At the even-numbered locations, the 18kV is brought to transformers at the surface to power the HVAC etc. on the surface.

They use twisted triplex EPR cable. Using triplex doubles the number of splices, but this was considered preferable to using larger runs of single conductor and twisting in the tunnel. The initial runs of cable from Master Substation to the adjacent access points are copper to reduce the voltage drop. The rest

of the loop is aluminum. There is an aluminum shielding braid around the cable.

Because the cable reels, pulling gear, etc. would constitute a major obstacle in the tunnel, and to avoid temporary installations, the power cable is the first thing installed in the tunnel. Along with this go the lights and the control cables 48V batteries with a 48V→220V converter are used to power the lights and controls.

There are two equipment stubs with transformers, at 700m intervals between every two access points. A single stub between access points leads to much higher costs (cable, etc.) than two stubs. The costs associated with two stubs and three stubs are essentially the same, but operationally two was felt to be better.

The electrical costs (for power, lights, etc.) for LEP are 82-100 MSF, 10% of the total LEP cost.

At the 18kV and higher levels all voltages and currents are monitored; at the low voltage level only selected circuits are monitored.

Estimated final stage LEP power is 230MW.

DRAFT

T.E.Toohig
11-13-84

SSC/LEP VISIT REPORT 4

LEP EXPERIMENTS/UA1, UA2

Alistair Smith

I. Organization

Each experiment has assigned to it a physicist from Bonaudi's group. This physicist may or may not be part of the experiment. He is responsible for coordinating the experiment's requirements with the machine and civil people.

II. Modeling

They are making extensive use of models to understand layouts, clearances, etc. 1/10 scale (1/20 for L3) models are used to study interferences, assembly procedures, sequences, etc. Shaft locations relative to assembly halls had to be modified in two areas based on assembly problems uncovered by detailed sequencing on the models. For critical cable routing they model critical areas at a larger scale, up to full scale.

III. Installation Schedule

The experiments must be in place when LEP is ready. The time allowed is 12 months, between the installation of the machine at a given point and beam. The experimenters are required to produce a detailed schedule to do this. Only OPAL has a successful schedule so far, and that is predicated on having 80T prime movers readily available - at a time when the accelerator has maximum demand for transport.

IV. UA1 - Hans Hoffmann

The experimental area power supply bay in the Assembly Building is the full length of the Assembly Hall. It is fed by 7+ MVA of installed power to feed the low beta power supplies, cal comps, and the experimental dipole (5MW).

Hoffmann reiterated the desirability of having a ~10T crane in the collision hall.

Major assembly of the detector was done elsewhere at CERN and transported to the Assembly Hall.

DRAFT

T.E.Toohig
11-15-84

SSC/LEP VISIT REPORT 5

CIVIL

Gunther Plass, Henri LaPorte, Bruno Bianchi, Christopher Laughton

I. General Comments

They use the Genie civil program to plan and monitor progress on the construction. The original planning was based on two TBM's working out from a common point. To recoup the time after their strike the contractor has agreed to use a third TBM which is not as fast (or expensive) as the first two. In bidding the tunnel they left the diameter of the tunnel undefined, specifying minimum. This takes advantage of existing TBM's.

The shotcrete is only a temporary lining. Applying it is a slow process in a small tunnel, so they have gone to a precast hoop approach. This is a development from the SPS experience. Incorporation of the precast installation into the TBM is a CERN development incorporated by the TBM manufacturer (Wirth). The precision of the tunnel is achieved by the inner cast-in-place concrete liner.

The rock in the Jura section is limestone, which does not need a support liner. They use shotcrete where needed. They are blasting at a rate of 120m/2 weeks.

They recommend sinking a small ($\sim$4 mϕ) shaft and running $\pm$50m of pilot/exploratory tunnel. This has proven very useful in itself and, in addition, by showing it to contractors has reduced the uncertainties and thus helped the bid prices.

II. Invert Design

In the SPS the invert was cast in without any ducts, etc. For LEP, because of space limitations (3.6m finished diameter) they will cast in two pipes for the raw water supply. They have no experience of doing this.

They have some earlier designs using precast elements, but as the invert became more and more shallow, it became irrelevant. Laughton suggested it might be useful to specify a precast invert but accept options.

III. Experimental Area Construction

They have resisted putting in spans greater than 25m in the molasse. To some extent this is arbitrary, but they feel safe with this, uncertain much beyond this.

They note that it is very difficult to enlarge an underground experimental gallery after the fact, so within the limit of 25m, noted above, it is better to make the galleries larger, rather than smaller from the beginning.

DRAFT

T.E.Toohig
11-15-84

SSC/LEP VISIT REPORT 6

INFRASTRUCTURE INSTALLATION: LOGISTICS AND IMPLEMENTATION

I. General Sequencing of Installation

The tunnel contractor leaves a bare tunnel. First installation is a leaky coax for 10-15 channels of communications, along with emergency lights every 40m (at quad locations). Personnel must carry their own work lights. The 18kV feeder is then laid in the trench with transformers in the stub tunnels. A provisional 380V line is run from the access and from the stubs with welding receptacle outlets every 320m.

The monorail goes in next. To avoid having to provide welding power in the tunnel, they weld at the access and pull the rail along on guide rollers up to the full 3.3km at a rate of 120m/day for one shift (8-10 welds). This comes to one month/sector with 200 m/day of bus installation.

The standard module for everything is 12m to save work below ground.

The cable trays are installed next, along with lights, on surface-mounted unistrut. They want to install the cables in the tray by using the monorail to feed directly into the tray. This amounts to about 300 control cables (∿105km/½ sector) and 100 other cables (e.g. ∿80km of power cables/½ sector).

The cooling system LCW goes next, followed by the bus bar.

II. Transport Containers

Access points 1, 2, 4, 6, 8 have large shafts with 6m long equipment accesses. Everything is handled in 12m long modular containers which are fitted out for transport by the monorail. They are designed to be tipped up for lowering down the shaft. Approximately 200 containers will be required in all. The standard cross-section of the container is 800mm W × 900mm H. The clear space under the containers or any transported article is 1100mm (which allows for golf carts).

III. Monorail Characteristics/Justification

Given the distances involved and the fact that the tunnel is sloped it would require a six ton battery to install the worst-case dipole using a battery powered magnet mover. The monorail will move a 7.5T load at 12 km/hr, with a 15T load at 7.5 km/hr. Even with these rates it will require 11 weeks to deliver pipe, making use of assembled trains, at a rate of 800m of pipe/week. To coordinate multiple trains there will be a track display at each pit, which will include the train numbers and locations.

After the infrastructure is in place, making use of all the even-numbered points plus Point 1, the magnets are installed using only the 14 meter diameter "civil engineering" pit 18. This pit has a large monorail switchyard at its base.

IV. Detailed Sequencing and Monitoring of Installation

A large LEP data base has been prepared, including pipes, cables, etc. The data base also has weights for containers, crane capacities and speed, etc., time/weld for pipe, etc. All of these will be continually updated on the basis of experience. The CPU requires 9 minutes to update some 400 activities. A fairly sophisticated program operating on the data base guides the installation.

Based on trial manipulations they will require 8 hr/day for moving and unloading equipment and people in the tunnel. The bottleneck in the operation is the pit, with limited speed and capacity lifts. Sixteen hours/day of pit operation will be required to match the project.

DRAFT

T.E.Toohig
11-21-84

SSC/LEP VISIT REPORT 7

SURVEY

Jean Gervaise

I. Accuracy

The accuracy achieved by using the Terrameter for the baseline triangulation is one part in 10^7. Over the course of a year distances have been reproduced to this accuracy with intervals of months between measurements.

The accuracy of the tunnel boring is ±8 cm; of this, 3 cm is the measurement uncertainty and 5 cm is the boring machine jitter.

II. Advice and References for SSC

Since the LEP triangulation the availability and accuracy of satellite methods of long base surveying have improved considerably. Especially in view of the long distances involved, Gervaise would advise using these techniques, rather than the Terrameter for the SSC.

He provided the following references.

1. GEO/Hydro, Inc.
   2115 E. Jefferson St.
   Suite 505
   Rockville, MD 20852
   Attn: Capt. Paavo Wikuri
2. "Report on Test and Demonstration of Macrometer Model V-1000 Interferometric Surveyor," FGCC Report FGCC-IS-83-2 , available from:

Sam Baker, Sales Representative
MACROMETRICS, Inc.
185 New Boston Street
Woburn, MA 01801

3. Federal Geodetic Control Committee
6001 Executive Blvd.
N/CGI, Room 1026
Rockville, MD 20852

4. "Geodetic Accuracy of the Macrometer Model V-1000," by Y.Boch, R.I.Abbott et al.
Air Force Geophysics Laboratory
Hanscom AFB, MA 01731
(Published in Bulletin Geodique of the International Association of Geodesists)

III. Tunneling Guidance

The CERN metrology group provides the survey guidance for the tunneling. They establish pillars in the tunnel behind the boring machine, or the road headers and loaders for the non-bored tunnels. The exact coordinates are transferred to the pillar from the triangulation references on the surface via the shafts. A laser is placed on one pillar and a sighting target in a second to provide guidance for the non-bored tunnel. In the case of the TBM the target is on a screen viewed by the operator. The metrology group each day provides the operator with a program for tracking the target on the screen.

IV. Installation Survey

The primary survey monuments are the quadrupoles. (Wall brackets of SPS installation have been eliminated.) The quadrupoles are installed first, requiring five weeks for installation (two weeks) and final alignment. The survey group has exclusive use of the tunnel in this period. Their setup reads the actual coordinates of a quad and compares it with the theoretical coordinates in the survey data base. The setup then automatically drives all screws to put the quad on its theoretical coordinates. The dipoles are aligned while being placed on their stands by aligning the dipole's target on the line defined by a laser beam from quad reference to quad reference, then bringing the stands to this position.

V. Site Criteria and Search

Gervaise was instrumental in the European search for the the site for the SPS. He provided us with a reference to the Final Site Report for the Weston (Fermilab) Site prepared by the U.S.Army Corps of Engineers. He also provided us with three volumes of reports on the selected European sites. These included the site criteria that were used in evaluating the sites.

DRAFT

T.E.Toohig
11-26-84

SSC/LEP VISIT REPORT 8

SAFETY

Robert Lévy-Mandel and Fritz Ferger

I. General Considerations

The LEP tunnel is a restricted underground space, 45 to 144 meters underground, with personnel access at only 8 points, the separation between exits being 3.3 km, compared with 1.2 km for the SPS and 0.24 km for the Fermilab Main Ring tunnel. It is neither a mine nor a road tunnel and so there are no definite safety guidelines. Unlike a road tunnel the accelerator tunnel is not loaded with flammables (gasoline, etc.) and the access is strictly controlled and limited to trained, qualified personnel.

II. Passive Tunnel Safety

Passive safety consists in measures to eliminate hazards from the tunnel. Three different zones with essentially different occupancy characteristics and types of potential safety hazard have been identified. These have been isolated physically and in terms of safety analysis and solutions. These are the tunnel proper, including isolated zones, the machine areas accessible during accelerator operation, such as klystron galleries, and the experimental areas. Fire is the worst potential hazard. The approach used in the tunnel is to limit flammables in the octants and to limit sources of smoke and toxic gases. CERN has written fire-retardant cable

specifications and industry has successfully developed the cables beginning with the SPS work. These are now commercially available in all categories including coax. They cost 10-15% more than the non fire-retardant cables, but the price is coming down as the cables are adopted for new tunnel installation throughout Europe. Part of the specification is that no chlorine or halogens are released if the cable is exposed to fire or high temperatures. The remaining problems for personnel are lack of ventilation and smoke.

Ventilation in the tunnel is provided by forcing air in at one end of the octant and exhausting it at the other end, 3.3 km away. The system is designed for 30 m^3/hr/person and 2 air changes/hr with a maximum air velocity of 0.5 m/sec when personnel are in the tunnel. To ensure ventilation in case of power interruptions four levels of power are provided for the ventilation, as well as for the elevators, sumps, and emergency lights. The primary EDF network is backed up by a limited-capacity Swiss line with automatic transfer and programmed restarts for the critical systems. Backing this up is the aerial network which was put in for construction and not removed. This level requires manual switching. In addition, emergency diesel generators back up the ventilation, elevators, and sumps. The computers which monitor and control the switching and restart are backed up by batteries.

The most serious residual problem for personnel is smoke, since even with sufficient oxygen, smoke can cause irritation and suffocation. To localize any smoke in the tunnel CERN

is looking at water barriers and foam barriers. The water is not very attractive, since it introduces large volumes of water into the tunnel. The foam barriers, which consist of foam released between a pair of barriers, requires a fairly small mesh on the barrier to hold the foam. This mesh is an obstacle to the normal ventilation in the tunnel.

III. Active Tunnel Safety

A primary CERN emphasis has been on "active" tunnel safety; i.e., ensuring that personnel can survive in case of an incident. They will have an access control system which logs people in and out of the tunnel. This will be incorporated into the "services" network for the machine, which reports to the Main Control Room.

Ten to fifteen channels of mobile communications will be provided via a "leaky coax" antenna in the tunnel. Working parties will be required to carry appropriate radios.

Each individual will have a rebreather with sufficient capacity to enable him to travel the maximum distance between exits if the ventilation were blocked. MSA makes a sealed unit that is good for 3/4 of an hour to one hour. Installation contractors would be required in their contracts to provide suitable rebreathers for their personnel.

Tunnel access will require appropriate health certification. In addition a buddy system will be required. These are similar to Fermilab's requirements for access under ODH conditions.

They maintain that, once you have taken the precaution of fireproof cables, distance between exits is not the problem. The problem is whether you have provided the means and

conditions to guarantee survival whatever distance has been chosen: it is a question of health and whether you have adequately sized the rebreathers.

IV. Evacuation

Evacuation is a serious problem. For individual evacuation provision is made in the monorail system for evacuating someone who is injured in the tunnel. A stretcher module is provided with a location for a medical attendant. This module be used to take the injured person to the nearest accessible exit to be lifted to the surface.

For evacuation of the tunnel in an emergency, personnel make their way to the nearest lift. The personnel lifts have positive ventilation from the surface and are insulated from the rest of the shaft by a shell which is fireproof and flameproof for at least 60 and 90 minutes respectively. In addition the lift cage itself must be fire resistant for at least 90 minutes. In the experimental areas, where more personnel are to be expected, a 90 minute fire-resistant chamber with independent air supply is provided at the base of the lift to "store" people waiting for the lift.

"Training of people is what is vital."

V. Experimental Areas

The tunnels and experimental areas are isolated by air locks.

The experiments are still in a conceptual stage so they cannot really plan in detail. The unknowns are most likely to have flammable and explosive gases, especially ethane. They have not ruled out using flammable gases, but expect to impose as a requirement that there be <100 kg of hydrocarbons.

Masks (rebreathers) coupled with appropriate ODH and specific gas detectors are expected to take care of the non-flammable, heavy gases.

A problem with these large detectors is that they tend to expand into all available space and include many levels of gangways. This makes ventilation difficult and makets it difficult to take out smoke. Each experiment has 0.5-1.5 MW of electronics.

The approach they are using is to hold "hearings" with the experimenters. They listen to what they want to do and make observations. The safety people make it clear to the experimenters that they (the experimenters) are responsible for the safety of the experiment. Safety will make observations, but they are not "authorizing" anything.

DRAFT

T.E.Toohig
11-26-84

SSC/LEP VISIT REPORT 9

LEP CONTROLS

Pier-Giorgio Innocenti

I. Controls/Support Groups Interaction

The equipment will be controlled by digital feedback loops. By definition the associated microprocessors are part of the equipment, not of controls. The Controls Group suggests they use standard bus, same microprocessors, same programming language; all but one group use Motorola G-64 bus, all but two groups use Motorola microprocessors.

Controls supplies the groups with an interface, and a software package that will interpret the down-coming messages. The environment is provided to strongly bias towards PASCAL. Beyond the interface card (crate, etc.) it is the responsibility of the particular support group.

Vacuum and power supplies are the largest components of the system with 4000 crates or groups of cards between them.

II. Networking

The Controls Group has chosen the IBM token ring for their local area networking. They chose this ring, because IBM had promised a kilometer of local connection. In fact CERN has driven to a mile, and with higher quality cable can do two miles. They are avoiding controls in the isolated power supply stubs, even though with this network they could drive that far. The token ring will handle one area on the LEP

ring. Between the isolated areas they will do time division multiplexing (TDM), using half the capacity of an 8M bit system. Using a dedicated cable with no drops between they have run over 24 km with the IBM token ring driven on TDM between areas.

They are making an optical fiber connection on the surface; two ducts have been installed to point 8. 1, 2 and 6 will be connected in the same way. This will provide two token rings, one on the surface (optical) and one in the ring (coax). One ring is the services (utilities) network, the other is the machine network. The services network has a battery backup since it handles alarms, vacuum, power, etc. This reports to the LEP control room. There is a gate (but no control) at this point to the general site surveillance system. Because of the sequencing of construction, and the need to have services-type confirmation available from the beginning, the services network will be propagated in the tunnel during the construction/installation period.

At the nodes (Process-control Assemblies) the VME crate/bus assembly using MC 68000 microprocessors will be used. They want to buy commercial equipment and there are some that are excellent for this, which were built for military applications like rockets and antimissile systems. The trouble is they are not VME bus.

The Controls Group also wants to connect the process computers to the phone system (digital) so they can communicate with central database.