GEM TN-93-480

Analysis of GEM/SDC Warmbore Temperatures during NEG Activation

John J. Krupczak
Super Conducting Super Collider Laboratory

September 29, 1993

Abstract:

A thermal analysis has been carried out of the temperature distribution in GEM/SDC warmbore during the activation of the NEG pump. The warmbore extrusion is considered to be at a uniform temperature of 150°C at the start of NEG activation. The NEG activation is assumed to consist of a 15 minute warm up of the NEG from 150°C to 450°C, followed by 45 minutes at 450°C. A 2D cross section of the beam tube is analyzed using the ANSYS finite element program. For an insulation thickness of 0.5 inches of fiberglass, the extrusion reaches an average temperature of 165°C, with a gradient of about 2°C between the warmest and coldest sections. The extrusion insert reaches 174°C. The heat loss to the environment is 130 W per meter, and the surface temperature of the insulation is expected to be 63°C. For a fiberglass insulation thickness of one inch, the extrusion reaches 190°C at the end of the NEG activation. The results of the thermal analysis indicate the proposed design for the extrusion is acceptable. Laboratory-scale tests will be required to choose a specific thickness of insulation and to investigate the methods used to apply the insulation to the warmbore flanges and extrusion.

Superconducting Super Collider
Physics Research Division
Cryogenics
PCG93097

September 29, 1993

Analysis of GEM/SDC Warmbore Temperatures During NEG Activation

John J. Krupczak

Abstract

A thermal analysis has been carried out of the temperature distribution in the GEM/SDC warmbore during the activation of the NEG pump. The warmbore extrusion is considered to be at a uniform temperature of 150 °C at the start of NEG activation. The NEG activation is assumed to consist of a 15 minute warm up of the NEG from 150 °C to 450 °C, followed by 45 minutes at 450 °C. A 2D cross section of the beam tube is analyzed using the ANSYS finite element program. For an insulation thickness of 0.5 inches of fiberglass, the extrusion reaches an average temperature of 165 °C, with a gradient of about 2 °C between the warmest and coldest sections. The extrusion insert reaches 174 °C. The heat loss to the environment is 130 W per meter, and the surface temperature of the insulation is expected to be 63 °C. For a fiberglass insulation thickness of one inch, the extrusion reaches 190 °C at the end of the NEG activation. The results of the thermal analysis indicate the proposed design for the extrusion is acceptable. Laboratory-scale tests will be required to choose a specific thickness of insulation and to investigate the methods used to apply the insulation to the warmbore flanges and extrusion.

Introduction

The warm bore section is a portion of the SSC beam pipe that will be used in the interaction region of the GEM and SDC detectors. The warmbore beam pipe incorporates and internal non-evaporating getter (NEG) vacuum pump that is used to maintain ultra-high vacuum during beam operation. The NEG vacuum pump must be activated by heating to a temperature of 450 °C before initiation of pumping. The aluminum beam pipe surrounding the NEG pump must be protected from overheating during NEG activation. In this report, a thermal analysis of the warmbore beam pipe is described. The analysis examines the feasibility of the proposed methods for activation of the NEG pump, and determines the temperature distribution in the beam pipe for two choices of pipe insulation.

A view of the warmbore beam section is shown in Figure 1*. A representative 8 m section of the warmbore is seen. The view is a half-section exposing the NEG pump strip which runs along the length of the beam pipe. The beam pipe which surrounds the NEG is an extrusion of 6063-T6 aluminum. A section view of the warmbore is shown in Figure 2. This view provides detailed dimensions of the extrusion. Also visible in Figure 2 is the 5052 aluminum insert which extends along the length of the extrusion. This insert contains perforations to allow gas in the beam area to flow into the region containing the NEG pump. The perforation density is 75 holes per meter. The insert is a separate roll-formed piece which is fitted into the extrusion during assembly. Details of the NEG pump can be seen in Figure 3. The NEG is a Saes Getters St707 strip [1]. It is held in position by stainless steel clips mounted on ceramic standoffs (the indication in the drawing of phenolic standoffs is for an earlier design). The aluminum extrusion is insulated with Micro-lok APT fiberglass insulation [2]. This is shown in Figure 4. An insulation thickness from 0.5 to 1 inch is expected. Also visible in Figure 4 are the angles used to support the warmbore on support columns. The columns are located at 8 m intervals along the warmbore.

The aspect of the warmbore operation of concern is the bakeout of the warmbore extrusion and the activation of the NEG pump. The warmbore initially contains gas at a pressure near atmospheric. An initial vacuum is produced flowed by a heating of the assembly to 150 °C to promote evaporation of water vapor and other materials condensed on the internal walls. The temperature of 150 °C is achieved by the use of heating tapes attached to the exterior of the extrusion. A thermostat control device is used to maintain constant temperature over time. The heating tapes can be seen in Figure 4. The fiberglass insulation applied around the extrusion facilitates the bakeout by allowing the 150 °C temperature to be reached with a minimum power input.

---

* Figures 1 - 4 provided by D. Casias and K. Bramble of SSCL, Experimental Facilities Dept.

After 24 hours of bakeout, the pressure is expected to be sufficiently low that activation of the NEG is possible. A current is passed through the NEG strip heating it to 450 °C in approximately 15 minutes. The activation then requires an additional 45 minutes of operation at 450 °C, before the temperature can be reduced. During the NEG activation, the extrusion temperature must remain near 150 °C to prevent re-absorption of gases.

The thermal analysis of the NEG activation is motivated by three concerns. While the extrusion must remain at 150 °C, excessively high temperatures exceeding approximately 190 °C are to be avoided. If such temperatures were to occur, then some type of active cooling of the extrusion would be required. The additional cost associated with a cooling system warranted an analysis of the warmbore temperatures caused by NEG pump activation. Another concern was the possibility of large temperature gradients in the extrusion which could lead to uneven thermal expansion and warping of the warmbore. The third concern is the magnitude of the heat loss through the fiberglass insulation which represents a potential load on the local HVAC systems.

Analysis Methods

To determine the temperature distribution in the warmbore, a 2D analysis was performed using ANSYS [3]. The primary concerns are the temperature gradients in the extrusion and the maximum temperature achieved during activation. The analysis assumptions then were chosen such that conservative assumptions would lead to higher temperatures. A cross section of the warmbore was analyzed. End effects caused by the insulated flanges and support post were not included in this analysis. The thermal model was developed using the geometry created by D. Russell for the stress analysis model [4]. The external boundary conditions were assumed to be still air at a temperature of 20 °C. Values used for the thermophysical properties used for the warmbore components are summarized in the appendix.

The ANSYS model used 2-D isoparametric thermal solids (STIFF55) for the extrusion and the insert. The thermal contact resistance between the insert and the extrusion was modeled using uniaxial thermal resistance links (STIFF34). Thermal radiation between the NEG and the extrusion required the use of non-linear thermal radiation elements (STIFF31). A total of 1400 elements were used in the model.

To determine the heat loss through the insulation, standard methods for process piping heat transfer analysis were used [5]. The heat loss through the insulation and the convective heat transfer coefficient from the insulation surface were treated as total equivalent conductance. Since it was desired not to underestimate the extrusion temperature, the air around the beam tube was

considered to be still with the heat transfer from the outer insulation surface occurring by natural convection only. A convective heat transfer coefficient from the outer surface of the insulation of 11 W/m2-K was used [5].

A transient heat transfer analysis was carried out for a 1 hour NEG activation. An initial condition of 150 °C in all components was used. The NEG temperature was assumed to increase linearly from 150 °C to 450 °C during the first 15 minutes. The heaters on the extrusion were considered to be turned off at the start of NEG pump activation. The NEG was then held constant at 450 °C for 45 minutes. The total time considered was 60 minutes.

Results

Insulation Thickness of 0.5 inches

The extrusion was considered to be covered with 0.5 inch of fiberglass insulation. At the end of the 1 hr period, thermal radiation from the NEG resulted in an average temperature of 165 °C in the aluminum extrusion. In Figure 5, a time history of the maximum and minimum extrusion temperatures is shown. The temperature of the extrusion was found to be uniform with less than 2 °C variation between the highest and lowest temperatures in the extrusion. This degree of uniformity indicates less than 1 mm difference between the thermal expansion of the two sides of the warmbore over an 8 m section. The extrusion temperature first degrees and then increases as the NEG reaches the activation temperature. The extrusion temperature continues to increase reaching an average temperature of 165 °C at the end of the one hour (3600 s) period.

Figures 6 through 10 show a time history of the temperature contours in the warmbore. The color contours are at 5 °C intervals between 145 and 170 °C. The times shown are at 1440, 1980, 2520, 3060 and 3600 seconds. (19, 33, 42, 51, and 60 minutes) These show the generally uniform heating of the extrusion over the NEG activation period. In Figures 7 through 11, the temperature of the insert is seen to be higher than the bulk extrusion by about 8 °C. After 3600 seconds, the maximum insert temperature is 174 °C compared to 166 °C in the extrusion. This higher temperature is due to the proximity of the insert to the NEG, and the thermal contact resistance between the insert and the extrusion. The actual insert temperature is likely to be lower than calculated, since worst case assumptions were used for the thermal contact resistance.

Figure 12 shows the detailed temperature contours for the extrusion after 1 hour. The difference between the maximum and minimum temperatures is less than 2 °C. This result is to be expected due to the high thermal conductivity of the 6063 aluminum alloy.

The temperature at the surface of the fiberglass insulation was calculated to be 63 °C (146 F). The temperature at the insulation surface is significant because the personnel working in the area must be protected from the possibility of exposure high temperatures. This expect temperature is below the value of 71 °C (160 F) considered to be safe for personnel protection. The heat loss to the environment during the activation was found to average 130 W per meter of warmbore.

Insulation Thickness of 1 inch

The use of 1 inch of insulation was also considered. The maximum and minimum temperatures are shown in Figure 12. It was found that the extrusion reaches 190 °C at the end of the NEG activation. The temperature variation in the extrusion remained under 5 °C. The insert temperature reaches 198 °C. With the greater amount of insulation, the heat load to the environment was reduced to 90 W per meter. The surface temperature of the insulation was calculated to be 49 °C (121 F). The 1 inch insulation leads to higher extrusion temperatures which may exceed acceptable limits for the aluminum material.

This analysis has established that, for the proposed design, no additional heating or cooling is required to maintain a temperature near 150 °C during NEG activation. It is expected that 0.5 inch of insulation will maintain acceptable extrusion temperatures. This conclusion that insulation alone is sufficient to maintain bakeout temperatures is consistent with the experimental results reported by Dortwegt and Benaroya for testing of the Advanced Photon Source at Argonne National Laboratory [6].

Discussion

The warmbore temperatures anticipated from the thermal analysis of the activation, described in the previous section, depend on several assumptions which must be carefully observed during assembly of the warmbore. It was assumed that the insulation completely surrounds the extrusion and there are no gaps or thickness variations. It was also assumed that the flanges and the areas around the support columns are well insulated. If the insulation is not installed carefully, significant heat leaks can occur resulting in local temperatures in the warmbore that are below 150 °C.

The thermal analysis results rely on data gathered from process piping installations. In general, the data are intended for industrial insulation design and are expected to be approximate only. For this reason the thickness of insulation required may vary slightly from the calculated results. Laboratory scale tests will be necessary to verify the expected temperatures. Methods used to accommodate the irregular shapes in the warmbore section when attaching the

insulation to minimize heat leaks may also require some small-scale laboratory test.

Conclusions

While risk exists have been identified, it is not likely that any of the anticipated problems encountered will render the proposed approach to NEG activation unfeasible. Since any heat loss problems will result in lower temperatures, it is likely that if temperatures are lower than calculated then the strip heaters can be used to maintain the extrusion at the desired 150 °C. Higher than expected temperatures can be decreased by the use a smaller thickness of insulation. Small-scale laboratory tests will allow fine-tuning of the insulation thickness and application methods.

References

[1] Saes Getters/USA., Inc., Colorado Springs, CO 80906.

[2] Owens Corning Fiberglass.

[3] Swanson Analysis Systems, Houston, PA .

[4] David M. Russell, Warm Bore Analysis, SSCL, 18 May 1993.

[5] W. C. Turner, editor,*Energy Management Handbook*, Wiley, New York, (1982).

[6] R. Dortwegt and R. Benaroya, "Distributed Non-evaporable Getter Pumps for the Storage Ring of APS," Argonne National Laboroatory, Argonne, IL 60439, Preprint.

Figure Captions

1. Warmbore Beam Section GEM/SDC.

2. Warmbore Section View.

3. NEG Support Channel Details.

4. Warmbore Clamp and Insulation.

5. Time History of Maximum and Minimum Extrusion Temperatures with 0.5 Inch Insulation.

6. Warmbore Temperatures at 19 minutes (0.5 Inch Insulation).

7. Warmbore Temperatures at 33 minutes (0.5 Inch Insulation).

8. Warmbore Temperatures at 42 minutes (0.5 Inch Insulation).

9. Warmbore Temperatures at 51 minutes (0.5 Inch Insulation).

10. Warmbore Temperatures at 60 minutes (0.5 Inch Insulation).

11. Detailed Warmbore Temperatures Contours at 60 minutes (0.5 Inch Insulation).

12. Time History of Maximum and Minimum Extrusion Temperatures with 1 Inch Insulation.

Appendix

Warm bore Properties

The properties of the aluminum materials in the warmbore are evaluated at 150 °C. The properties of concern in this analysis vary only a few percent between 150 °C and 200 °C and were therefore considered constant. The thermal conductivity of the insulation was evaluated at the mean insulation temperature.

Table A.1 Warmbore properties

Material	Property	Value	Ref.
6063 Aluminum	Thermal Conductivity	2.0 W/cm-K	1
5052 Aluminum	Thermal Conductivity	1.42 W/cm-K	1
Aluminum	Specific Heat	890 J/kg-K	2
Aluminum	Density	2710 kg/m3	1
Aluminum	Thermal Expansion	26 e-6 K-1	2
Al-Al in vacuum	Contact Conductance	1500 W/m2-K	3,4
Aluminum	Emissivity	0.1	2
NEG strip	Emissivity	0.65	5
Fiberglass insulation	Thermal Conductivity	0.06 W/m-K	6

Property References:

[1] Jensen, J. E., W. A. Tuttle, R. B. Stewart, H. Brechna, and A. G. Prodell, *Brookhaven National Laboratory Selected Cryogenic Data Notebook*, BNL 10200-R, Brookhaven National Laboratory, (1980).

[2] Touloukain, Y. S., R. W. Powell, C. Y. Ho, P. G. Klemens, *Thermophysical Properties of Matter.*, IFI/Plenum, New York, (1970).

[3] Ozisik, M. N., *Heat Transfer*, McGraw-Hill, New York (1985).

[4] A. M. Clausing and B. T. Chao, "Thermal Contact Resistance in a Vacuum Environment," *J. Heat Transfer* 87 (1965) 243-265.

[5] Saes Getters/USA., Inc., Colorado Springs, CO 80906.

[6] W. C. Turner, editor,*Energy Management Handbook*, Wiley, New York, (1982).

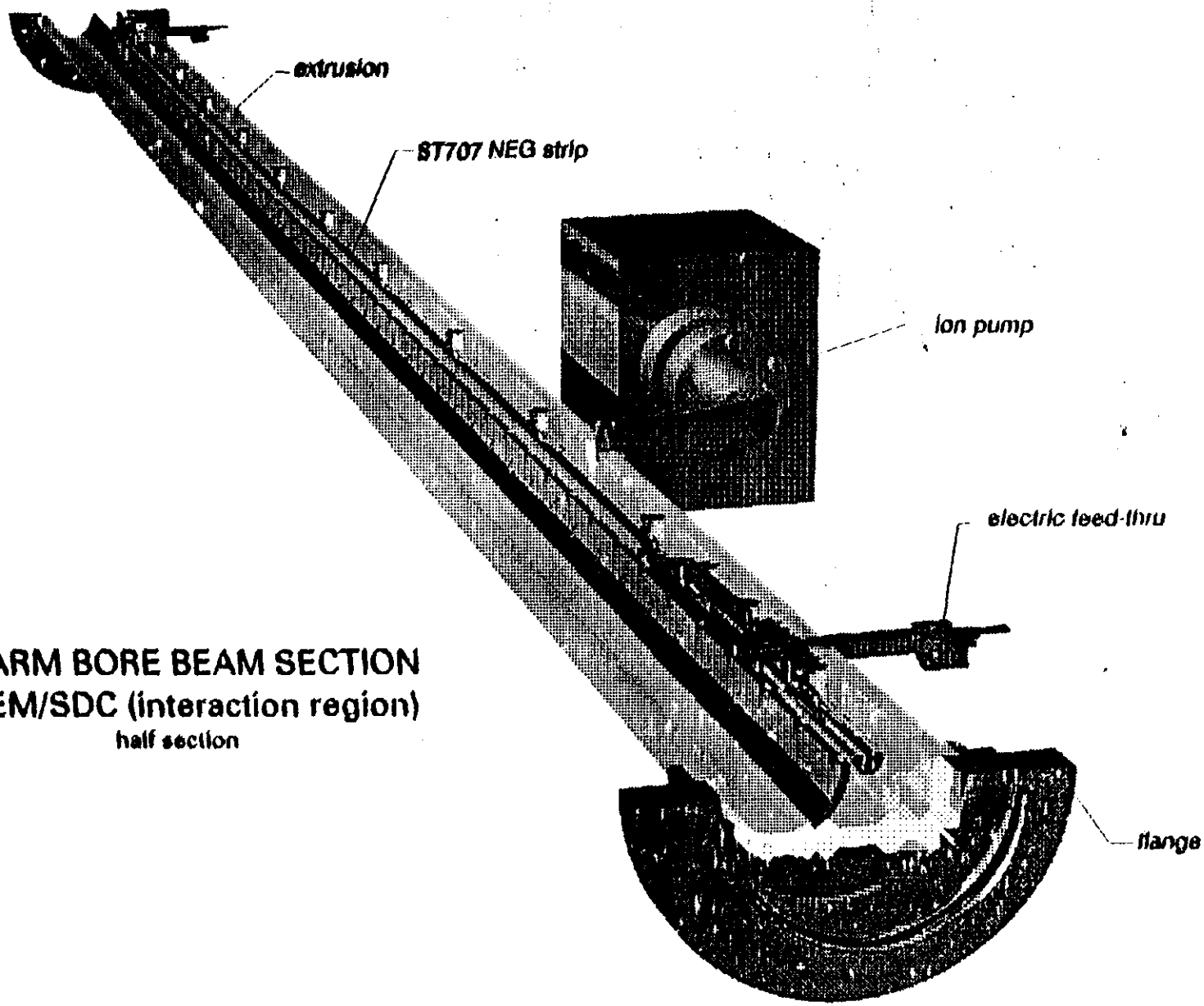

WARM BORE BEAM SECTION
GEM/SDC (interaction region)
half section

FIG. 1

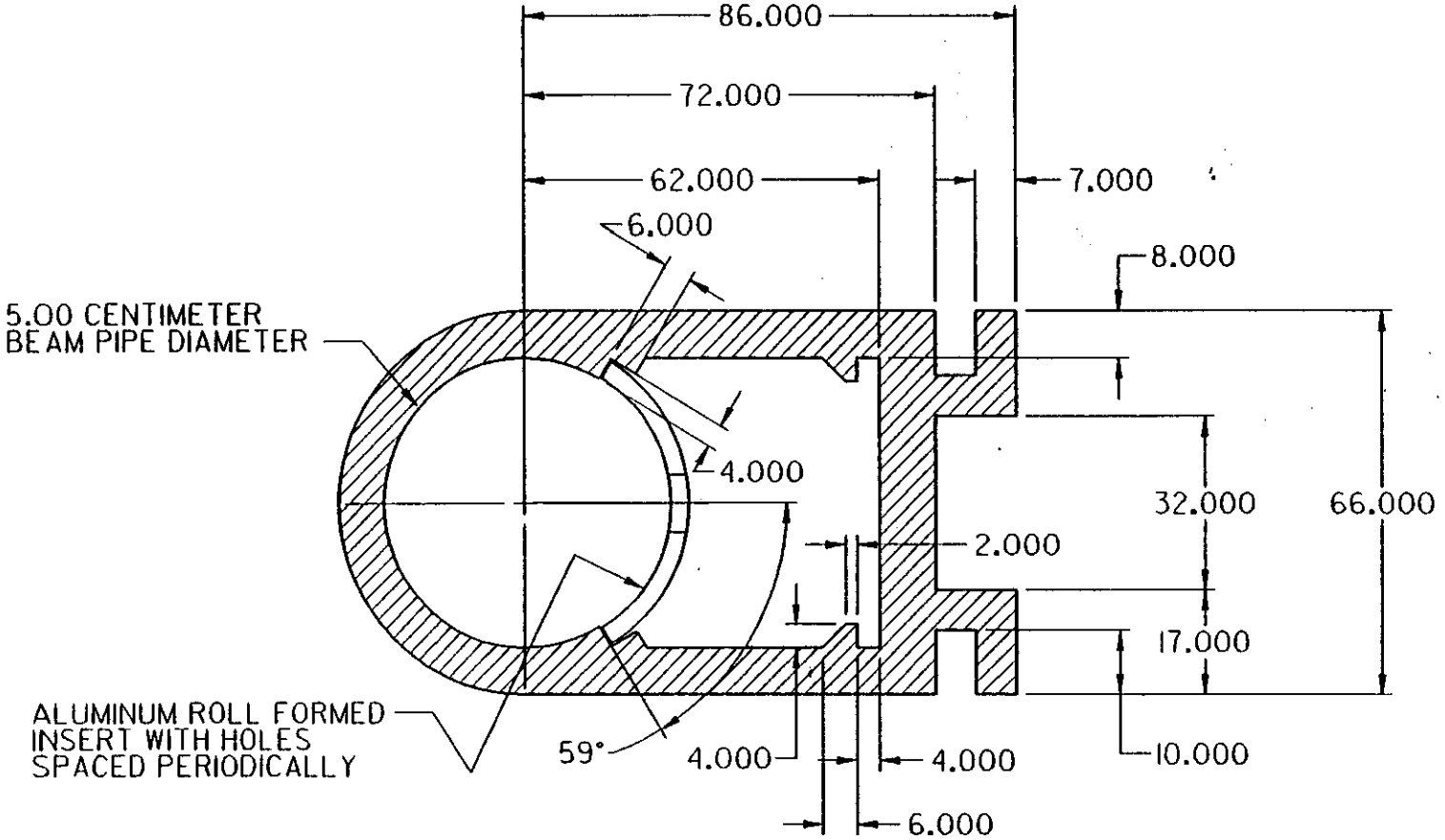

SECTION C--C

NOTES:

MATERIAL IS ALUMINUM 6061-0

INSERT IS ALUMINUM 5052

ALL DIMS ARE MILLIMETERS

D. A. CASIAS DATE: APRIL 12, 1993

WARMBORE SECTION VIEW

PRELIMINARY DRAWING: WARMBORE2.SEC

SSC LABORATORY

FIG 2

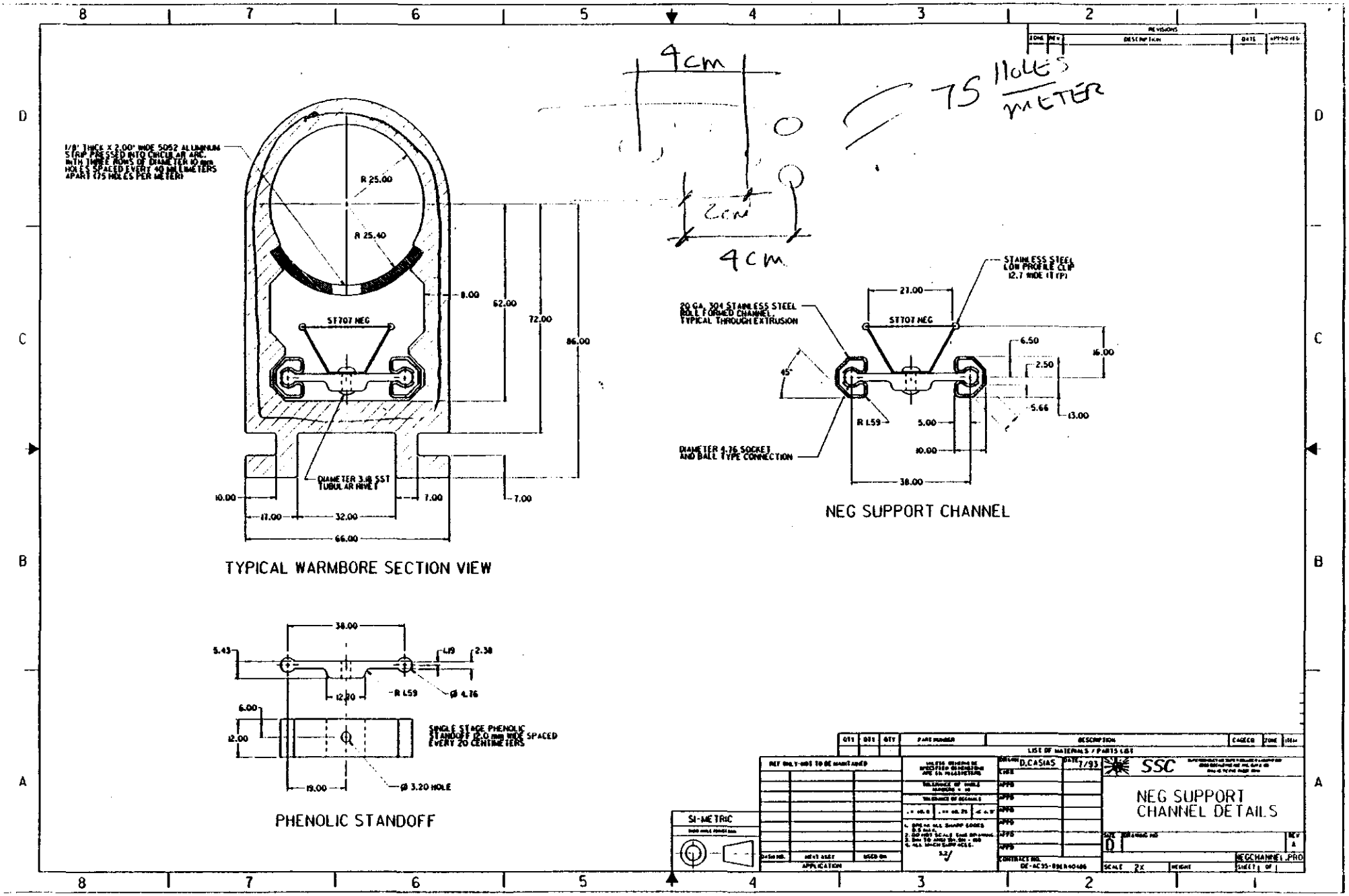

4cm
2cm
4cm
75 HOLES / METER
1/8" THICK X 2.00" WIDE 5052 ALUMINUM STRIP PRESSED INTO CIRCULAR ARC. WITH THREE ROWS OF DIAMETER 10 mm HOLES SPACED EVERY 40 MILLIMETERS APART (75 HOLES PER METER)
R 25.00
R 25.40
8.00
62.00
72.00
86.00
ST707 NEG
DIAMETER 3.18 SST TUBULAR RIVET
10.00
17.00
32.00
66.00
7.00
7.00
TYPICAL WARMBORE SECTION VIEW
STAINLESS STEEL LOW PROFILE CLIP 12.7 WIDE (TYP)
27.00
20 GA. 304 STAINLESS STEEL ROLL FORMED CHANNEL, TYPICAL THROUGH EXTRUSION
ST707 NEG
6.50
16.00
2.50
45°
5.66
13.00
R 1.59
5.00
10.00
DIAMETER 4.76 SOCKET AND BALL TYPE CONNECTION
38.00
NEG SUPPORT CHANNEL
38.00
5.43
1.19
2.38
12.70
R 1.59
Ø 4.76
6.00
12.00
SINGLE STAGE PHENOLIC STANDOFF 12.0 mm WIDE SPACED EVERY 20 CENTIMETERS
19.00
Ø 3.20 HOLE
PHENOLIC STANDOFF
SI-METRIC
LIST OF MATERIALS / PARTS LIST
D.CASIAS
7/93
SSC
NEG SUPPORT CHANNEL DETAILS
D
NEGCHANNEL.PRO
SCALE 2X

FIG 3

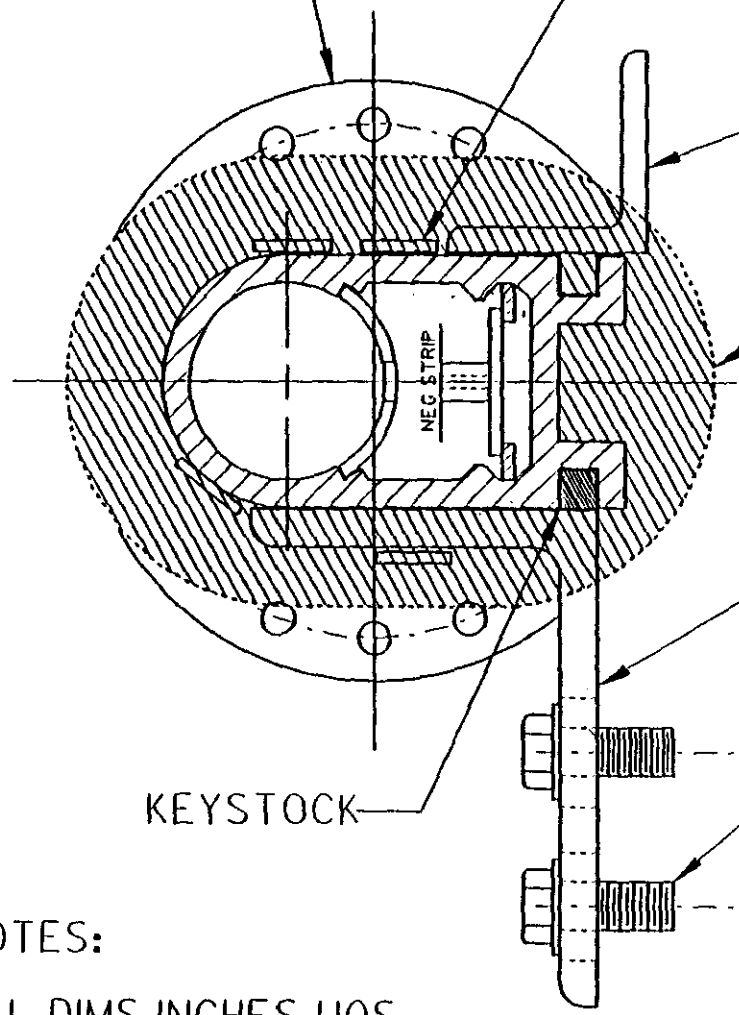

FLANGES TO BE WRAPED ALSO

1/2" WIDE HEATING TAPE, ATTACHED TO EXTRUSION WITH ALUMINUM TAPE. WRAP AROUND SUPPORT ANGLES. (BAKEOUT TEMP = 150 DEG. C)

1/4" X 2" X 2" STEEL ANGLE AT SUPPORT COLUMN ONLY (TACK WELD TO COLUMN)

THORPE PRODUCTS

1" THICK PERMANENT FIBERGLASS MICRO-LOK APT PIPE COVERING. USE STAPLES OR TACKS (CUT AND WRAP AROUND ANGLES)

JOHN - MANSVILLE

3/8" X 3 1/2" X 5" STEEL ANGLE AT SUPPORT COLUMN WITH FOUR DIAMETER 12.7 X 25.4 SLOTTED HOLES (4X)

KEYSTOCK

M 12 X 1.75 HEX FLANGE SCREWS (4X)

NOTES:

ALL DIMS INCHES UOS.

COLUMN SPACING APPROXIMATELY EVERY FIVE METERS

D. A. CASIAS DATE: APRIL 12, 1993

WARMBORE CLAMP

PRELIMINARY DRAWING: DETAIL1.CLAMP

SSC LABORATORY

FIG 4

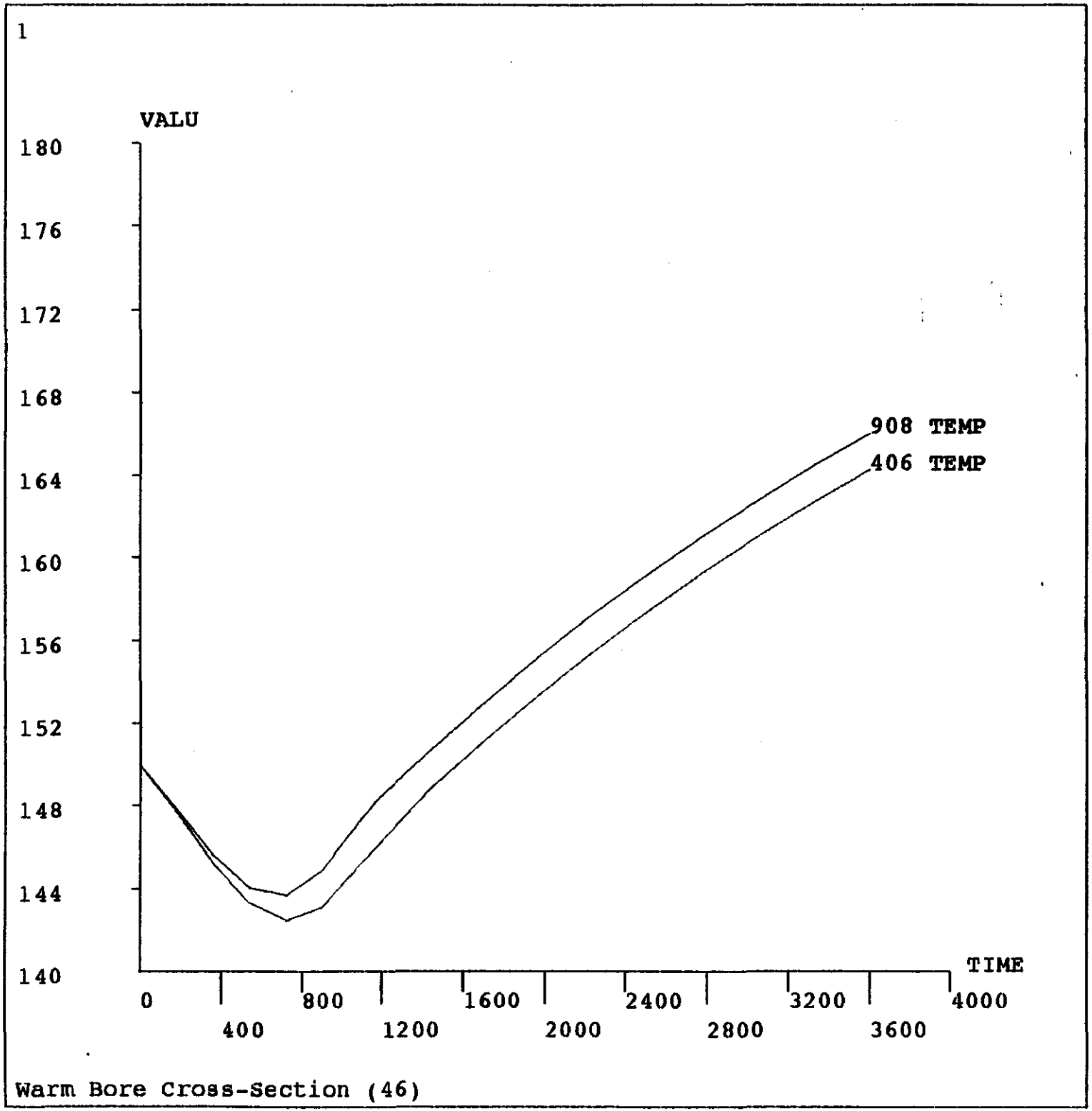

ANSYS 4.4A1
SEP 28 1993
22:06:00
PLOT NO. 2
POST26

ZV =1
DIST=0.6666
XF =0.5
YF =0.5
ZF =0.5

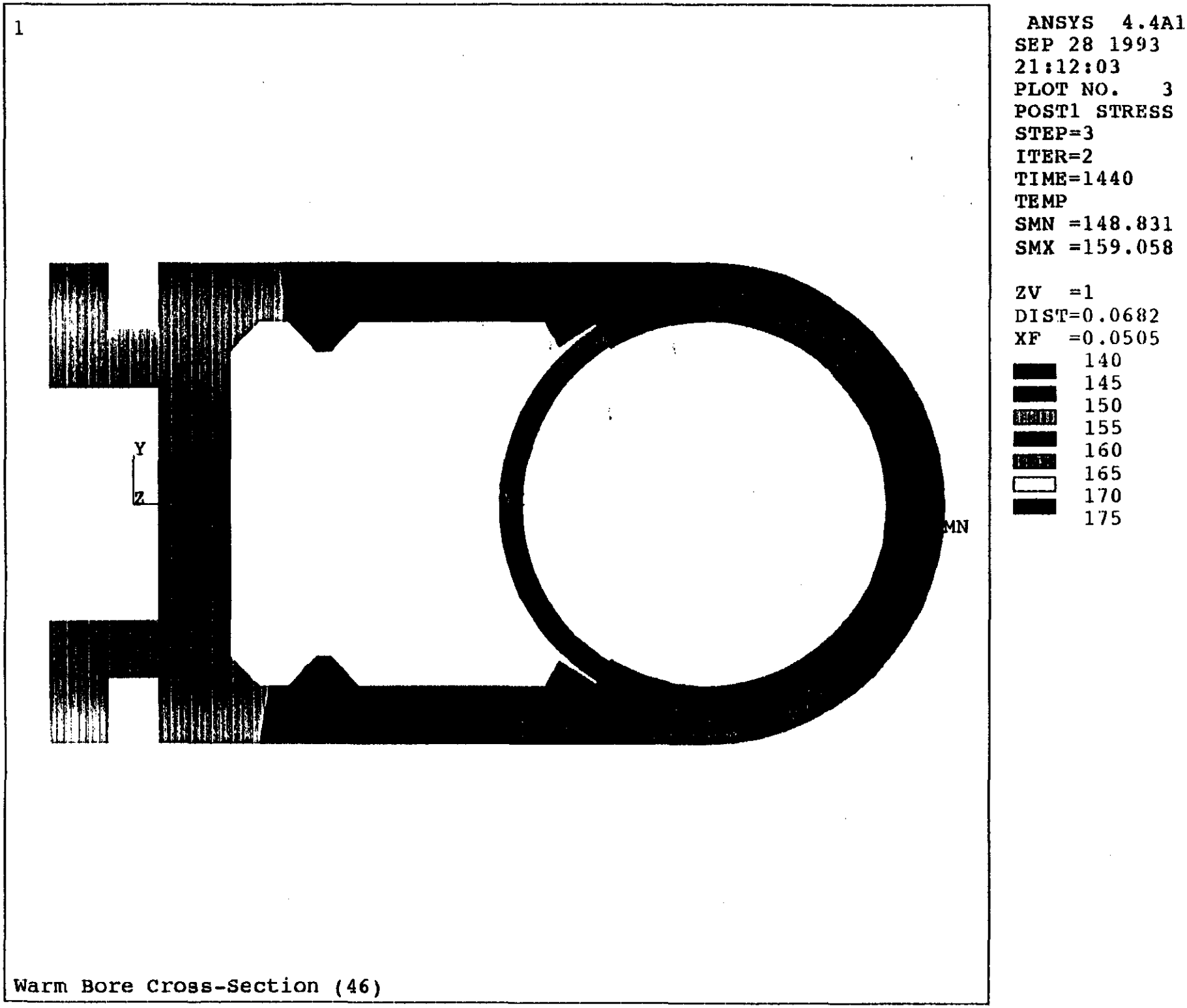
1
ANSYS 4.4A1
SEP 28 1993
21:12:03
PLOT NO. 3
POST1 STRESS
STEP=3
ITER=2
TIME=1440
TEMP
SMN =148.831
SMX =159.058
ZV =1
DIST=0.0682
XF =0.0505
140
145
150
155
160
165
170
175
Y
Z
MN
Warm Bore Cross-Section (46)

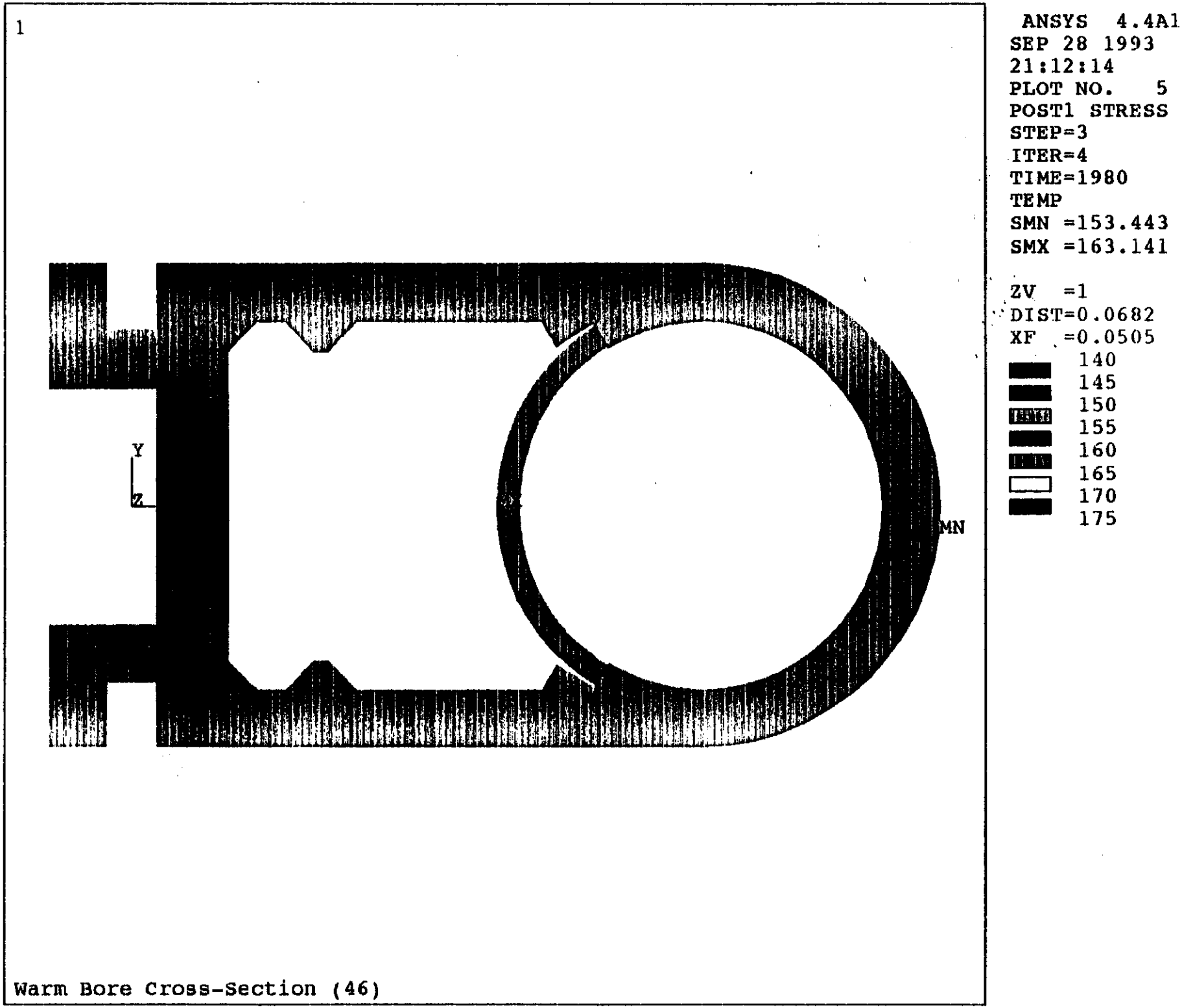
1
ANSYS 4.4A1
SEP 28 1993
21:12:14
PLOT NO. 5
POST1 STRESS
STEP=3
ITER=4
TIME=1980
TEMP
SMN =153.443
SMX =163.141
ZV =1
DIST=0.0682
XF =0.0505
140
145
150
155
160
165
170
175
Y
Z
MN
Warm Bore Cross-Section (46)

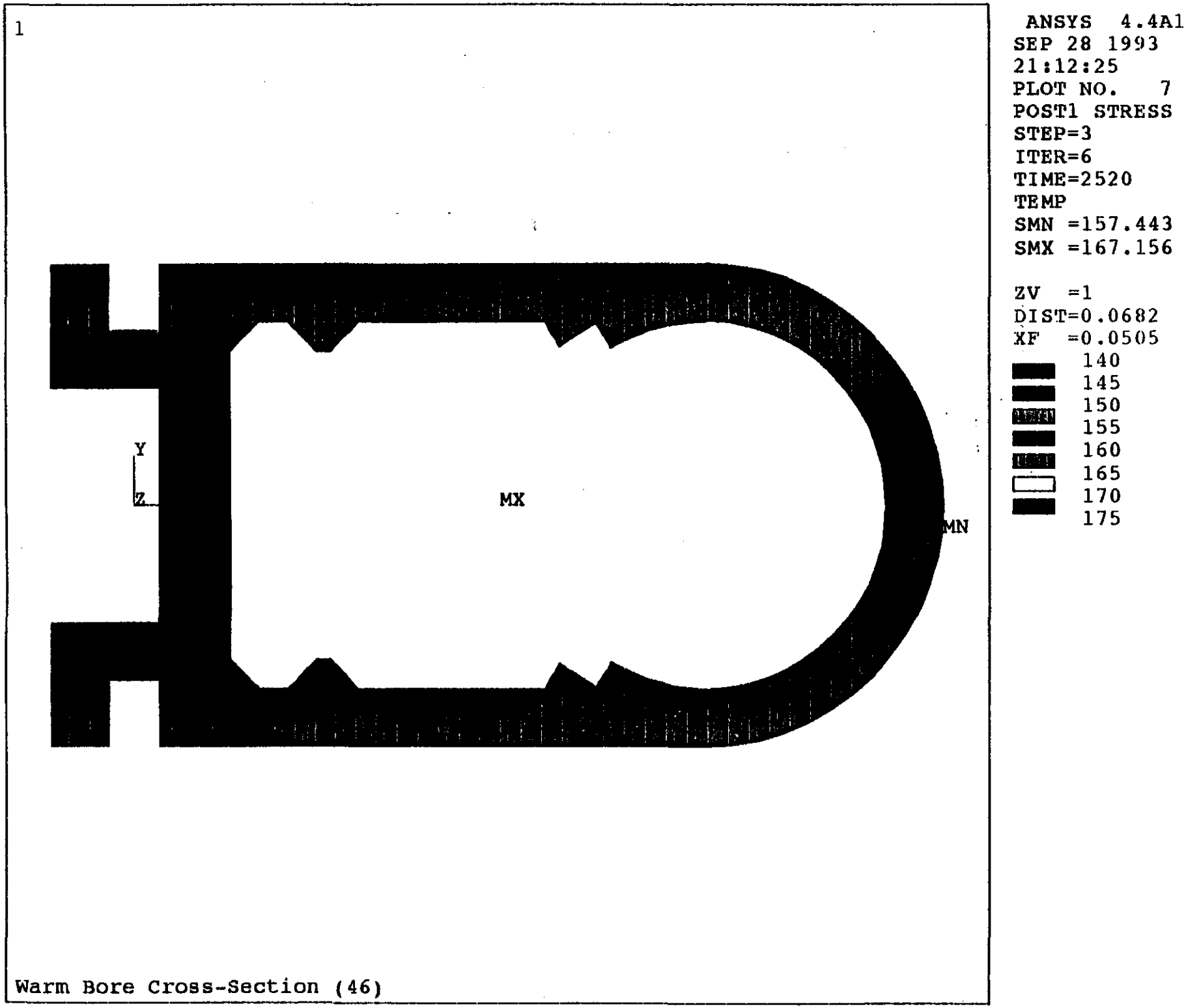
1
ANSYS 4.4A1
SEP 28 1993
21:12:25
PLOT NO. 7
POST1 STRESS
STEP=3
ITER=6
TIME=2520
TEMP
SMN =157.443
SMX =167.156
ZV =1
DIST=0.0682
XF =0.0505
140
145
150
155
160
165
170
175
Y
Z
MX
MN
Warm Bore Cross-Section (46)

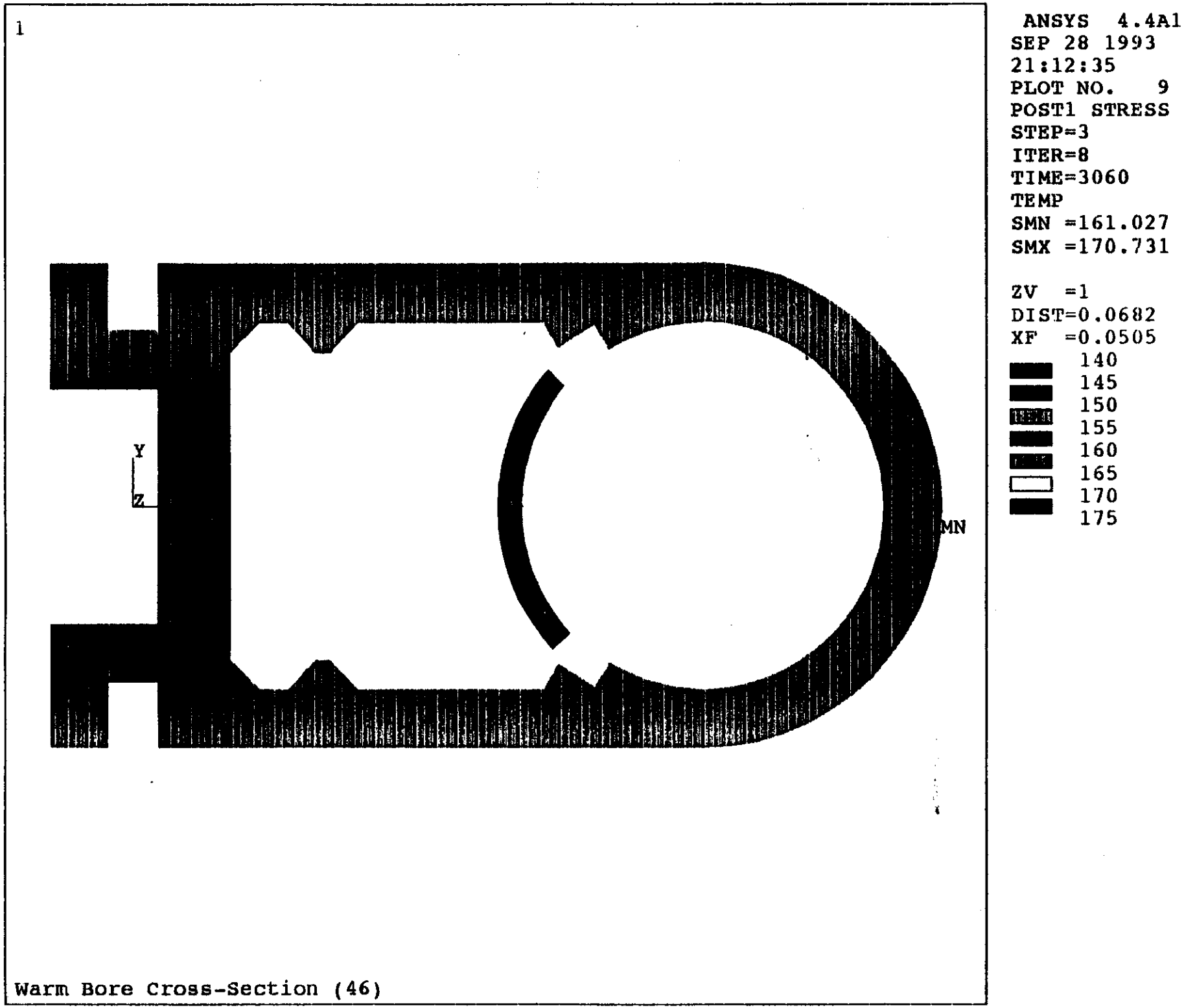
1
ANSYS 4.4A1
SEP 28 1993
21:12:35
PLOT NO. 9
POST1 STRESS
STEP=3
ITER=8
TIME=3060
TEMP
SMN =161.027
SMX =170.731
ZV =1
DIST=0.0682
XF =0.0505
140
145
150
155
160
165
170
175
Y
Z
MN
Warm Bore Cross-Section (46)

1

ANSYS 4.4A1
SEP 28 1993
21:12:43
PLOT NO. 11
POST1 STRESS
STEP=3
ITER=10
TIME=3600
TEMP
SMN =164.241
SMX =173.935

ZV =1
DIST=0.0682
XF =0.0505

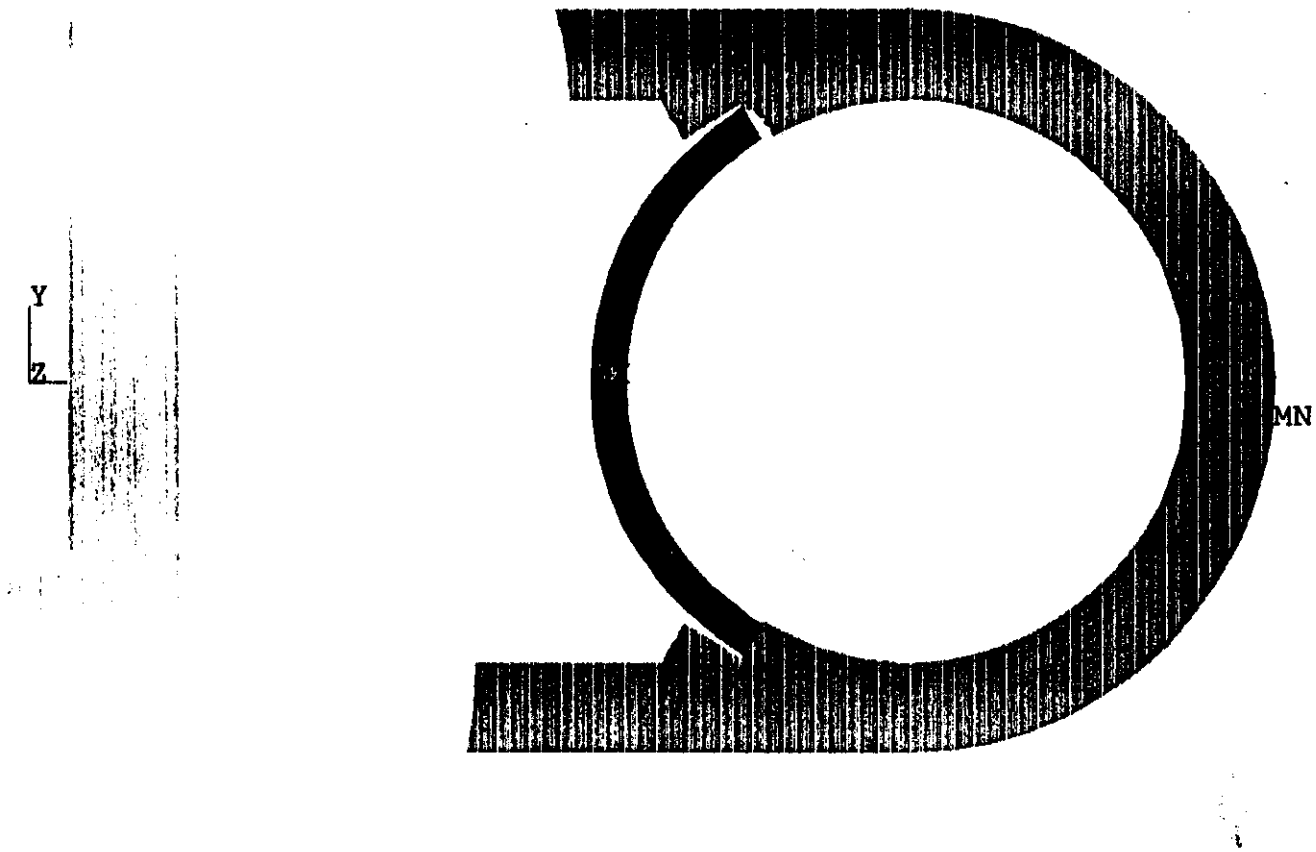

140
145
150
155
160
165
170
175

Warm Bore Cross-Section (46)

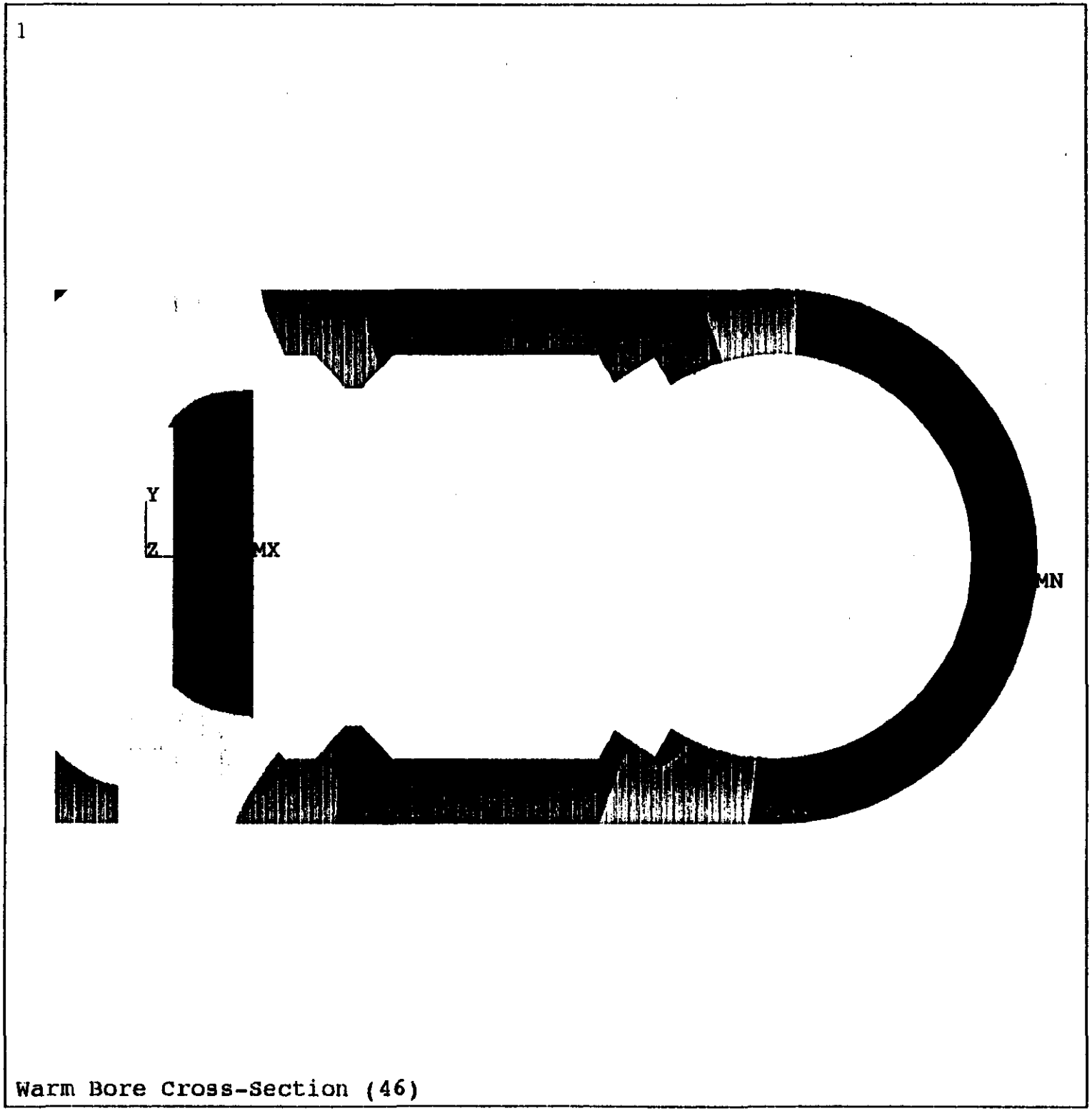
1
Y
Z
MX
MN
ANSYS 4.4A1
SEP 28 1993
21:56:05
PLOT NO. 1
POST1 STRESS
STEP=3
ITER=10
TIME=3600
TEMP
SMN =164.241
SMX =166.016
ZV =1
DIST=0.0682
XF =0.0505
164.241
164.439
164.636
164.833
165.03
165.227
165.424
165.622
165.819
166.016
Warm Bore Cross-Section (46)

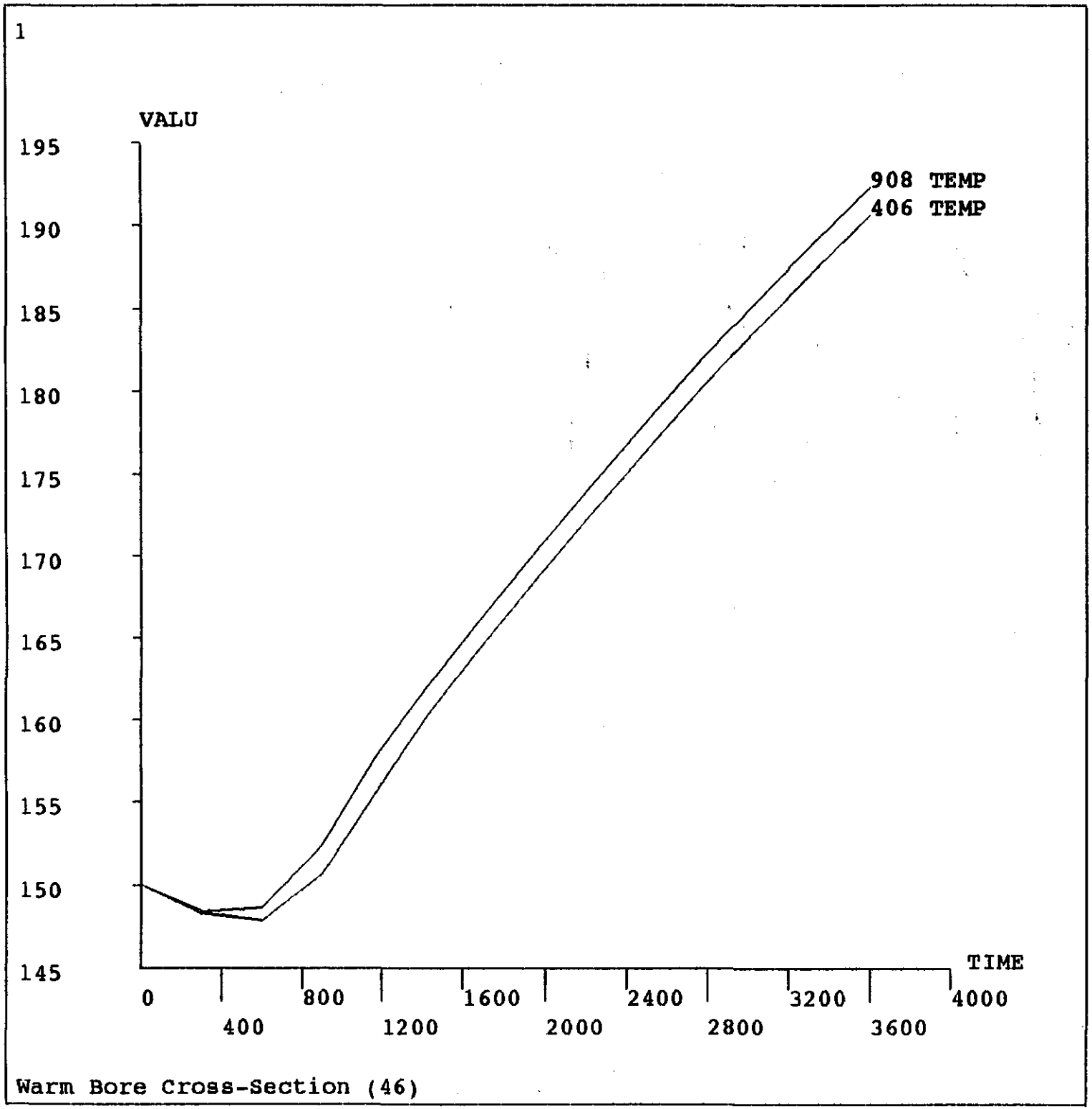

ANSYS 4.4A1
SEP 28 1993
17:58:08
PLOT NO. 2
POST26

ZV =1
DIST=0.6666
XF =0.5
YF =0.5
ZF =0.5