GEM TN-93-465

# A Cosmic Ray Test Stand for Scintillating Calorimeter Modules at SSCL

Rencheng Shang, Jingkang Deng
SSCL and Tsinghua University

Bill Wisniewski
SSCL

Jim Reidy
SSCL And Mississippi University

July, 1993

Abstract:

We propose to build a cosmic ray test stand at SSC Laboratory with some existing materials. It would be used for the acceptance test of all the scintillating calorimeter modules with cosmic ray before their installation in the system.

# A Cosmic Ray Test Stand for Scintillating Calorimeter Modules at SSCL

Rencheng Shang, Jingkang Deng
SSCL and Tsinghua University

Bill Wisniewsky
SSCL

and

Jim Reidy
SSCL and Mississippi University

July, 1993

**Abstract**

We propose to build a cosmic ray test stand at SSC Laboratory with some existing materials. It would be used for the acceptance test of all the scintillating calorimeter modules with cosmic ray before their installation in the system.

## 1. Introduction

The scintillating calorimeter will be the first subsystem to be installed inside the magnet. There are total of 44 modules for this subsystem. All these modules' manufacturing and preinstallation testing have to be finished by the end of 1996. Among the 44 modules, two prototype modules have to be completed earlier. The first prototype module should catch up with the Fermilab beam test in March of 1995. Before the beam test, the module should be acceptance tested by cosmic ray. The second prototype module should be completed at the middle of 1995. The other 42 (or 44) module should be completed around the fall of 1996. These modules are of typical size of $5.0 \times 1.0 \times 0.7$ m$^3$ and weight 24 metric tons. And all of

them have to be acceptance tested at SSCL before installation by cosmic ray test stand. Non of the test stand available presently can meet the testing requirements, time schedule and handle these huge modules. We propose to build a cosmic ray test stand specially designed to meet the physical requirement for such modules at SSC Laboratory.

The full scale test stand have to be built in one of the assembling buildings at IR5 by utilizing the 30 T crane to handle the modules. According to the updated schedule, the south building will be ready in October, 1994, and the north in January, 1995. In order to catch up the modules' test schedule, we have to start all the preparation work at another place before the assembling buildings being ready. We suggest to start setting up the scintillating detectors, muon position detectors and the related electronics in building 4 on a smaller rack. And followed by the designing and manufacturing of the full scale rack at somewhere else before the assembling buildings' official occupation. Following is a description of the cosmic ray test stand specially designed for the scintillating calorimeter modules' acceptance test.

## 2. System description

Figure 1 shows the schematic diagram of the proposed cosmic ray test stand which provides triggering on penetrating cosmic ray muons and precise tracking of the muon trajectories. Two planes of trigger scintillators, upper and lower, are used to produce the coincidence gate signals for the system. Muon energy threshold is determined by the absorption of the calorimeter module in place. The thickness of the calorimeter module (70 cm, Cu) is sufficient to absorb the copious soft component in cosmic rays and corresponding threshold is about 0.8 GeV.

To identify the trajectories of triggered muons, a set of proportional tubes ($65 \times 420$ cm) are used to measure the coordinate of a hit. Upper and lower proportional tubes are arranged in groups of 8, as shown in Figure 2, with all the electronics at one end and, at other end, pairs of wires from non-contiguous tubes are connected in series to reduce the number of channels of electronics. There are 32 proportional tubes in total for upper and lower plane, respectively. The proportional counters of present design may cover more than 80 % of the

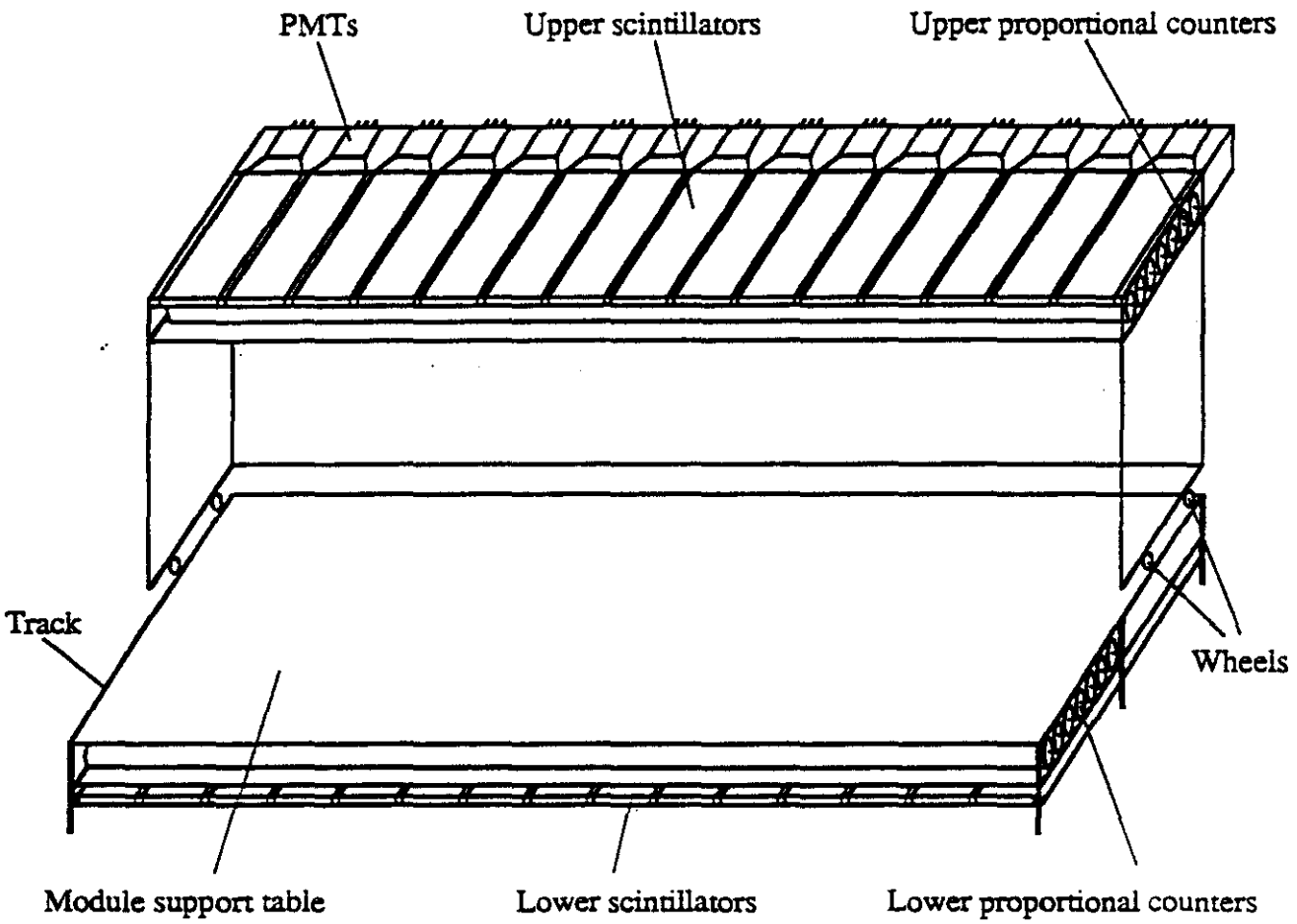


Figure 1: Cosmic ray test stand for scintillating calorimeter modules.

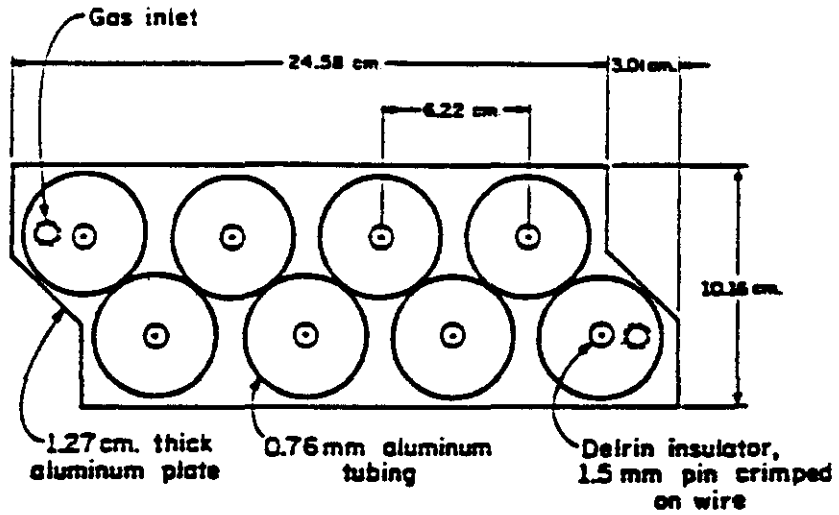


Figure 2: Arrangement of a proportional tube group.

modules' surface. However, if 100 % coverage is necessary, we can increase the number of proportional counters. The transverse coordinate (perpendicular to the tubes) of a hit is provided by the known location of the tube, while the longitudinal coordinate (parallel to tubes) is provided by charge division on resistive wire which allows the measurement of the position of hits with an experimental error $\sigma$ of about 6 cm.

All the upper trigger scintillators and proportional tubes are mounted on a movable rack. This arrangement allows to handle the full size modules on the stand with the 30 T crane in one of the assembling building at IR5. The conceptional electronics diagram used in the cosmic ray test stand is shown in Figure 3.

The total estimated trigger rate of the system over one whole module is about 5 per second and 1.7 M hard cosmic muon events will be accumulated in 4 days. A histogram of 1,000 counts per mesh cell ($5 \times 6$ cm) can produce a response with a statistics error about 3 %. Taking into account the module handling and possible repeated test, a total time of about 8–9 months is needed to collect data for all modules.

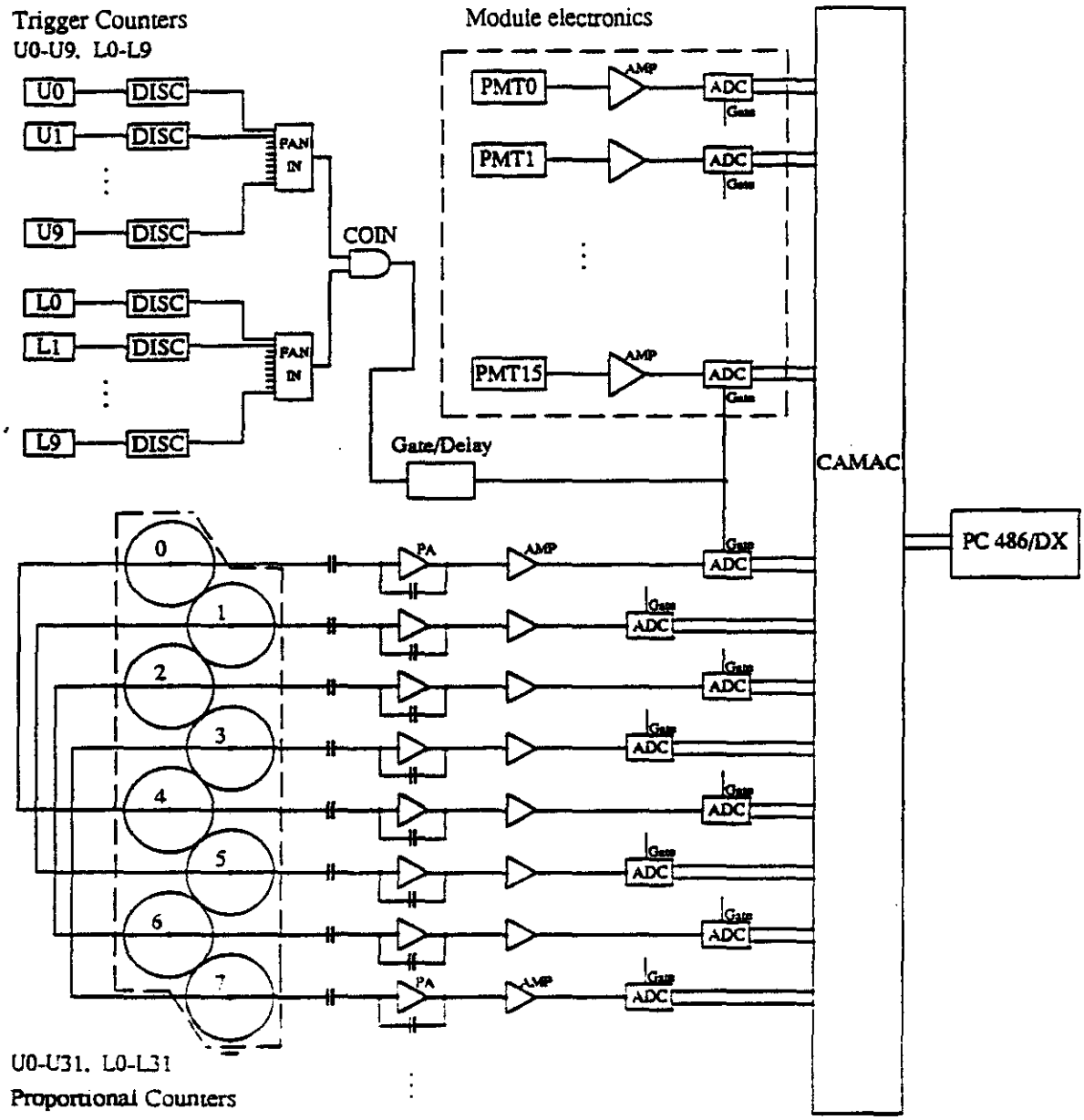


Figure 3: Schematic diagram of electronics used in the cosmic ray test stand.

## 3. Tasks

To complete the stand may include the following tasks:

1. Procuring scintillators as triggering detectors. Presently, we have obtained some scintillators from Fermilab and arranged for shipping to Dallas.

2. Purchasing of HV power supplies and PMTs.

3. Constructing a small metal rack for preparation work in building 4.

4. Testing of all scintillators (mainly for uniformity of counting rate hit at different position) to see if the performances are meeting our requirements.

5. Constructing of the scintillating detectors to match the shape and size requirement of the test stand.

6. Procuring muon position detectors to meet our requirement of position resolution. We are trying to get some used proportional counters from SLAC (or Iarocci tubes from Houston University).

7. Constructing a gas flowing system for the proportional counters.

8. Purchasing of electronics for proportional counters' readout, trigger, CAMAC crates and a rack, and an on-line using computer.

9. Testing the proportional counters, selecting those with good performances.

10. Designing the full scale metal rack to be installed in the assembling building at IR5.

11. Manufacturing the rack somewhere and shipping to IR5.

12. Finishing the administration work required from SSC Laboratory for this kind of facility.

13. Constructing the metal rack in the south building at IR5 and then moving to north building while it's ready.

14. Tuning-up all the detectors and electronics.

15. Finishing all the softwares required, such as for DAQ and triggering, and data base for the cosmic ray testing.

To finish all the above works may take a period of time of more than one year, so we should start this work as early as possible.

## 4. Schedule

The schedule of the project is tabulated in Table 1. It may be separated into two major parts, *i.e.* the preparation work in building 4 at Stoneridge, and the full size stand work at IR5.

## 5. Financial support requirement

At present, there are 12 universities and two national labs (ORNL and SSCL) working on scintillating calorimeter system. These universities have got some small amount of research funding from TNRLC. This small funding seems not available for building such a cosmic ray test stand at SSCL. We may gradually get support from GEM project, but it seems coming out very slow, and the universities are also waiting for such support. There is some other suggestion of having final quality assurance testing somewhere other than SSCL. But this seems not very reasonable and practical, because the transportation to SSCL may cause some kind of damage to the modules. Accordingly, we suggest to build such a test stand right at SSC Laboratory and to get some support from physics group B at the first stage to start the work soon.

Because of the limited research funding, we should use as cheap as possible components if they can meet the physics performance requirement for this test stand. We have obtained some used scintillating plates (free of charge) from Fermilab, being in the process of shipping to Dallas. Bill Wisniewsky can get some proportional counters from SLAC (free or very low cost). Some metal frames from TTR group can be provided to us for the preparation work in building 4. What we need at present to start the work are some electronics modules, a CAMAC crate and a rack, a few HV power supplies and a few PMTs. We may need $ 20 k to 30 k from physics group B to start the work this year.

The prices of the required components are estimated in Table 2.

## 6. Personal

As a SSC employee, Bill Wesnissky can be in charge of this project. Jim Reidy is working on the scintillating part of the modules, he can be one of the major consultants of the project.

Table 1: Time schedule of building the cosmic ray test stand.

| Task # | Content | Start time | End time | Working Area |
|---|---|---|---|---|
| 1 | Scintillators procurement and shipping | Apr. 1993 | Aug. 1993 | |
| 2 | procurement of muon detectors (proportional counters or Iarocci tubes) | July, 1993 | Oct. 1993 | |
| 3 | purchasing HVs & PMTs | July, 1993 | Sept. 1993 | |
| 4 | testing of used scintillators | Oct. 1993 | Nov. 1993 | BLDG 4 |
| 5 | shaping & constructing sci. detectors | Nov. 1993 | Dec. 1993 | BLDG 4 |
| 6 | gas flowing system for pro. counters | Oct. 1993 | Nov. 1993 | BLDG 4 |
| 7 | purchasing electronics and on-line computer | Sept. 1993 | Oct. 1993 | |
| 8 | testing & selecting pro. counters | Nov. 1993 | Jan. 1994 | BLDG 4 |
| 9 | tuning-up detector and electronics system | Feb. 1994 | Apr. 1994 | BLDG 4 |
| 10 | designing full scale rack | Apr. 1994 | May, 1994 | BLDG 4 |
| 11 | manufacturing of rack | May, 1994 | Sept. 1994 | |
| 12 | constructing rack at IR5 | Sept. 1994 | Oct. 1994 | S. BLDG |
| 13 | final tuning-up all detectors and electronics | Oct. 1994 | Dec. 1994 | S. BLDG |
| 14 | completing related software | June,1994 | Dec. 1994 | S. BLDG |
| 15 | moving to north building | Dec. 1994 | Jan. 1995 | N. BLDG |
| 16 | commissioning test for the prototype modules | Jan. 1995 | Feb. 1995 | N. BLDG |

Table 2: Estimated prices of the electronical components of the cosmic ray test stand.

| Item | Specification | Amount | Unit cost | Subtotal |
|---|---|---|---|---|
| Computer | Macintosh/PC486 | 1 | 4k | 4k |
| Software | LabVIEW | 1 | 2k | 2k |
| Scintillators | | $15m^2$ | 1.5k | no cost |
| *Proportional counters* | $\phi 5 \times 420$ *cm* | *80* | 0.2k | *no cost* |
| (or Iarocci tubes) | | 10m | 1k | 10k[a] |
| CAMAC crate | | 1 or 2 | 5.5k | 5.5k |
| Rack | | 1 | 3.5k | 3.5k |
| Electronics modules | | 10 | 2.5k | 25k |
| HV supply | ~100 channels | 1 | 17k | 17k |
| PMTs | | 40 | 0.4k | 16k |
| Metal rack | | 1 | 20k | 20k |
| Total | | | | 93k[b] |

*a.* In the case of proportional counters are not available, Iarocci tubes might be an option.
*b.* The price of Iarocci tubes is not included.

Rencheng Shang and Jingkang Deng are now working on the preparing work. According to this year's collaboration plan between GEM and China, which has been proved by the authorities of SSCL and been in executing, two more people (one physicist and one electronist) from Tsinghua University will come to SSC this year. One or two of them can work on this project. There are still some other people in GEM expressed their interest in participating this work.

Contact persons:

| | | | | | |
|---|---|---|---|---|---|
| Rencheng | Shang | ext: | — | E-mail: | Shang@sscvx1.ssc.gov |
| Jingkang | Deng | | 6314 | | Deng@sscvx1.ssc.gov |