GEM TN-93-438

SIGEM
Progress Report on Global GEANT Simulation for GEM

Y. Fisyak, K. McFarlane, V. Perevoztchikov, J. Womersley

August 2, 1993

Abstract;

The current status of SIGEM (version 2.2) and future developments are discussed. The program is based on GEANT 3.15 and closely follows the style of GEANT. The present version is based on the v93c version of the CERN library.

GEM TN-93-438

August 2, 1993

Y.Fisyak, K.McFarlane, V.Perevoztchikov, J.Womersley

SIGEM
Progress report on
Global GEANT Simulation for GEM

The current status of SIGEM (version 2.2) and future developments are discussed. The program is based on GEANT 3.15 and closely follows the style of GEANT. The present version is based on the v93c version of the CERN library.

Contents

1 Introduction 1
2 SIGEM structure 2
  2.1 SIGEM — Steering for GEM sImulation 3
  2.2 TTGEM — TiTle constants for GEM 4
  2.3 XSGEM — experimental setup 6
  2.4 UTGEM — Utilities package 9
  2.5 REGEM — prototype of GEM reconstruction 9
3 SIGEM file organization 9
  3.1 Files 11
  3.2 Versions 11
4 Usage SIGEM 13
5 Near future developments of SIGEM 13
6 Long term plan — development of global GEM simulations 14
  6.1 Projects 16
  6.2 Milestones 17

1 Introduction

The SIGEM system is the first version of the global simulation of the GEM detector, and extends beyond the detector itself (for example it includes the low-beta quads and the experimental hole). It uses GEANT and support from the CERN library. It has the following features (see the SIGEM data flow diagram in Fig.1:

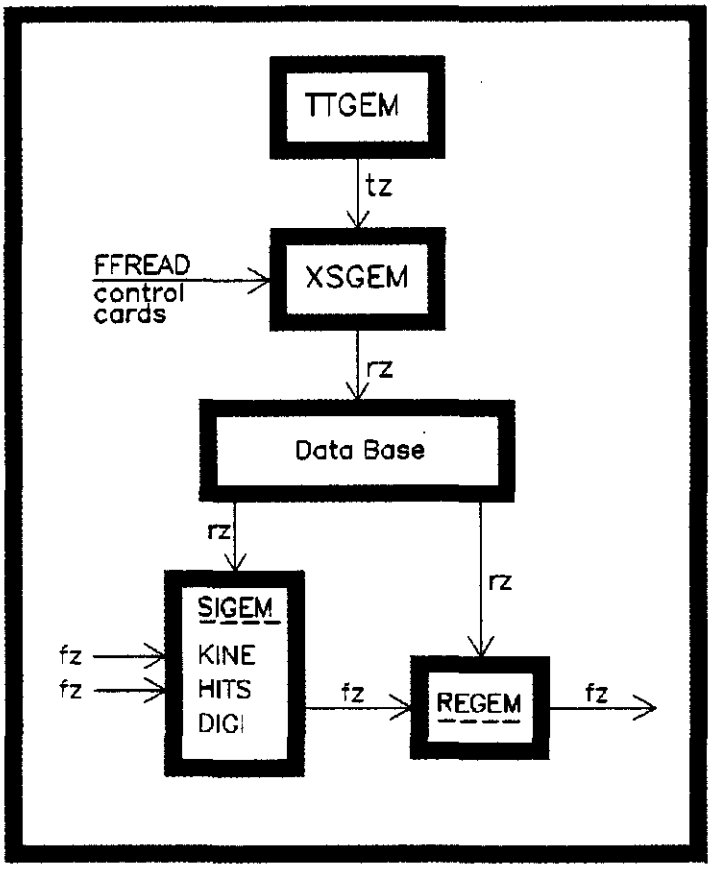

Figure 1: The SIGEM data flow diagram

- The geometry, materials, and rotations are specified in a 'database' which uses the TZ (Zebra Title handling) package
- A variety of generators are available
- All communication between modules is done with the standard ZEBRA structures available within GEANT

- Hits are defined for all subdetectors: the Central Tracker, the calorimeters and the muon system. Hits include position, detector element, and timing information
- Digitization is available for some detectors (the CSC's)
- There is a sample reconstruction package for charged tracks in the muon system
- Fast calorimeter simulation is available via the latest version of the H1 algorithms (GFLASH)
- Tracking via a subset of the CALOR89 routines (GCALOR) is available
- Pileup is designed to be handled at the hit level by combining hit banks
- Code is maintained and different versions produced using PATCHY/CMZ.

The code uses the standard GEANT modularity: a steering program, SIGEM, first defines the detector from the TiTles with the eXperimental Setup package and initializes the generator. The KINE structure is filled, tracking is done, making HITS and DIGItizations. The structures can be written out using the RZ or FZ packages for later analysis or combination for pileup. The following sections give specific details on structure and use of the packages.

2 SIGEM structure

The SIGEM structure very closely follows the GEANT structure and consists of the following 6 packages and one data file:

- **SIGEM** — GEANT3/GEM SImulation program steering
- **TTGEM** — GEM TiTle data base
- **XSGEM** — eXperimental Setup of GEM detector
- **UTGEM** — GEM UTility routines
- **REGEM** — GEM REconstruction
- **BAGEM** — description of Zebra banks used in SIGEM
- **GFLASH** — calorimeter shower parametrization — part of H1 software
- **GCALOR** — starting from GEANT version 3.16 this is part of GEANT, but the present SIGEM is based on version 3.15

2.1 SIGEM — Steering for GEM sImulation

SIGEM includes :

- steering on the level of a run:
  - Defining input/output files is controlled by FFREAD cards
    - **sigem.ttl** — FFREAD cards themselves
    - **rzin** — random access (RZ) file with constants for geometry, materials, tracking media, and magnetic field map — **(RGET)**
    - **rzout** — random access file (RZ) to save the above constants — **(RSAV)**
    - **fzin** — input file (FZ) with including KINE, HITS and DIGI structures — **GET**
    - **fzout** – output file with above structures — **(SAVE)**
    - **sigem.asd** — title constants in card format (TZ)
    - **sigem.pyt** — constants for PYTHIA
  - booking of histograms
  - Control of the kinematics (via FFREAD card **KINE**):
    - KINE 0 — default — generate single muon with $\Theta = 60°$ $\phi = 60°$ and momentum 60 GeV/c
    - KINE 1 (particle type) Θ ϕ (momentum) X Y Z — single particle
    - KINE 2 — Multipion event with fixed number of tracks in the given momentum and theta range
    - KINE 3 — Single track event in the given momentum and theta range
    - KINE 4 — read kinematics for DTU minimum bias event
    - KINE 6 — Single random track event in the given p_T and Θ range
    - KINE 7 — Single random track event in the given p_T and η range
    - KINE 8 — Beam - gas interaction of 20 TeV protons with gas.
    - KINE 9 — user entry
    - KINE 10+MSEL — PYTHIA process no. **MSEL** selection
- Control at the level of the event — read, simulate, analyze, write and recover
- Control at the level of the track — parametrization or full simulation
- Control at the level of the step — hit creation and filling hit banks
- Digitization and creation of primitives for trigger. This procedure includes pile-up events. Digitization for CSC is written by V.Balagura on the base of the V.Cherniatin & A.Chikanian program and has been implemented in the SIGEM release 2.2.

2.2 TTGEM — TiTle constants for GEM

This data file could be considered as a prototype of a database or some type of input to the database. It contains in card format the following constants:

- Pure materials, for example:

```
 #. list of pure materials  A          Z        dens        X_0       abs_l
"Beryllium          "  9.0122     4.0000     1.8480     35.276     40.690
"Bor 10             "  10.000     5.0000     2.3400
"Bor 11             "  11.000     5.0000     2.3400
```

- Mixtures which could be defined recursively, for example:

```
"Boron                "      2    2.34          comp.no.
          "Bor 10            "    -.20          Volume (-) or Weight (+)
          "Bor 11            "    -.80          Volume (-) or Weight (+)
"B_2 O_3              "      2    2.34          comp.no.            dens
          "Borom             "   -2.00          Volume (-) or Weight (+)
          "Oxygen            "   -3.00          Volume (-) or Weight (+)

"Barium sulfate       "      3    -1.0000       comp.no.            dens
          "Barium            "    -1.0000
          "Sulfur            "    -1.0000       Volume (-) or Weight (+)
          "Oxygen            "    -4.0000       Volume (-) or Weight (+)
"Barite               "      8     3.20         comp.no.            dens
          "Water             "   -28.07         Volume (-) or Weight (+)
          "Si O_2            "    -2.88         Volume (-) or Weight (+)
          "Al_2 O_3          "    -1.00         Volume (-) or Weight (+)
          "Fe_2 O_3          "    -5.55         Volume (-) or Weight (+)
          "Ca O              "    -6.46         Volume (-) or Weight (+)
          "Mg O              "    -0.22         Volume (-) or Weight (+)
          "Barium sulfate    "   -52.30         Volume (-) or Weight (+)
          "B_2 O_3           "    -5.61         Volume (-) or Weight (+)
"Kr/Pb mixture for EM"      -6     4.5000       comp.no.            dens
          "Liquid Krypton    "   -0.20000       Volume (-) or Weight (+)
          "Lead              "   -0.05000       Volume (-) or Weight (+)
          "Iron              "   -0.02000       Volume (-) or Weight (+)
          "NEMA G10 plate    "   -0.01000       Volume (-) or Weight (+)
          "Kapton            "   -0.01950       Volume (-) or Weight (+)
          "Copper            "   -0.00050       Volume (-) or Weight (+)
```

- Set of standard rotation matrices definition:

```
000D          (x,y,z) => ( x, y, z)
180D          (x,y,z) => (-x, y,-z)
180R          (x,y,z) => ( x, y,-z)
```

```
ZSXD          (x,y,z) => ( y,-z, x)
90XD          (x,y,z) => ( y, z, x)
90YD          (x,y,z) => ( z, x, y)
90ZD          (x,y,z) => (-x, z, y)
90YZ          (x,y,z) => (-y,-z, x)
90XY          (x,y,z) => ( z,-y, x)
XYXD          (x,y,z) => ( x, y,-z)
XZXD          (x,y,z) => ( x,-y, z)
YZXD          (x,y,z) => (-x, y, z)
```

- Muon system support structure nodes (Draper)
- Magnetic field map
- Geometry volume and detector element description, for example, description of Silicon Disks

```
*DO  VOLU   1 -U -A4CW -c1/60  #. Title for SWFC1 created on 921209 at  837
"SWFC"    "PGON"              "Silicon              "
        22                                                    Npar
  -3.286500       6.573000       1.000000       6.000000    l_phi,phi_r,NPh,NZ
                 -0.1250000       30.06388       31.48388    Z, R_min, R_max
                 -0.3000000E-01   30.06388       31.48388    Z, R_min, R_max
                 -0.3000000E-01   13.38387       31.48388    Z, R_min, R_max
                  0.3000000E-01   13.38387       31.48388    Z, R_min, R_max
                  0.3000000E-01   30.06388       31.48388    Z, R_min, R_max
                  0.1250000       30.06388       31.48388    Z, R_min, R_max
*DO  ROTM   1 -U -A4CW -C1/60 #. Title for SWFC1 created on 921209 at  837
"NEXT"                 90.00000      0.0000000E+00          Identifier, Th,Ph
                       90.00000       90.00000                          Th,Ph
                      0.0000000E+00  0.0000000E+00                      Th,Ph
*DO  POS    1 -U -A4CW #. Title for SWFC1 created on 921209 at  837
"SWFC"        1     "DSKC"      -5.383875      0.0000000E+00 -0.6250000E-01
"NEXT"         "ONLY"

*DO  DET    1 -U -A4CW #. Title for TRAK/  TRAK created on 921209 at  837
"TRAK"    "TRAK"              1         0       200         0
"TRAK"         0
*DO  DETV   1 -U -A4CW #. Title for TRAK/  WFDC created on 921209 at  837
"TRAK"    "WFDC"          11210      1000         0
*DO  DETH   1 -U -A4CW #. Title for TRAK/  WFDC created on 921209 at  837
"TRAK"    "WFDC"              6
 #. NAMESHNBITSH    ORIG           FACT #
"XOUT"            18   35.00000       1000.000
"YOUT"            18   35.00000       1000.000
"ZOUT"            18   100.0000       1000.000
"DEDX"             0  0.0000000E+00  0.1000000E+08
```

```
"T_OF"            16  0.0000000E+00   10.00000
"YDET"            12   10.00000       200.0000
*DO  DETU   1 -U -A4CW #. Title for TRAK/  WFDC created on 921209 at  837
"TRAK"    "WFDC"
              2  0.0000000E+00  0.5000000E-02
```

2.3 XSGEM — experimental setup

Together with constants (the so-called TiTle constant information) this package is responsible for the creation of GEANT materials, tracking media, the geometrical description of the detector, the detector data SETS and the detector element (DETS) structures. At the moment it plays the role of a data base. There are two essential points to note:

- The description of the detector geometry closely follows the GEM mechanical structure and assembly procedure. This allows us to account for misalignment and also gives the possibility of checking different approaches to detector alignment, and provide the possibility of developing procedures to estimate and correct for it.
- The description of detector elements provides the possibility of accounting for calibration constants, dead elements, etc. and of using the GEANT geometrical tree to access geometrical information for any detector element during a reconstruction.

In SIGEM the approach adopted is to use different levels of detail for the detector simulation of systems and/or subsystems, as follows:

- Level 0 — NO detector or subdetector at all
- Level 1 — System as a "dead" material
- Level 2 — Simplified description i.e. mixture level calorimeter with GFLASH with HITS
- Level 3 — Full description (Barrel accordion) with HITS

The level of detail is defined as run parameters via the FFREAD card 'GEOM', for example:

```
geom 'GEMD' 2 'CALO' 1
```

In this example the calorimeter is used as a dead material with no hits.

The GEANT model of the GEM detector as side and end views is shown in Fig.2. This model includes in total 2088 volumes (without divisions) of 338 different types (at the detailization level 2). The status of GEM geometry description is the following:

- The Muon system is described as completely as possible, including chamber frames, detector elements, support structure. This description is up to date.

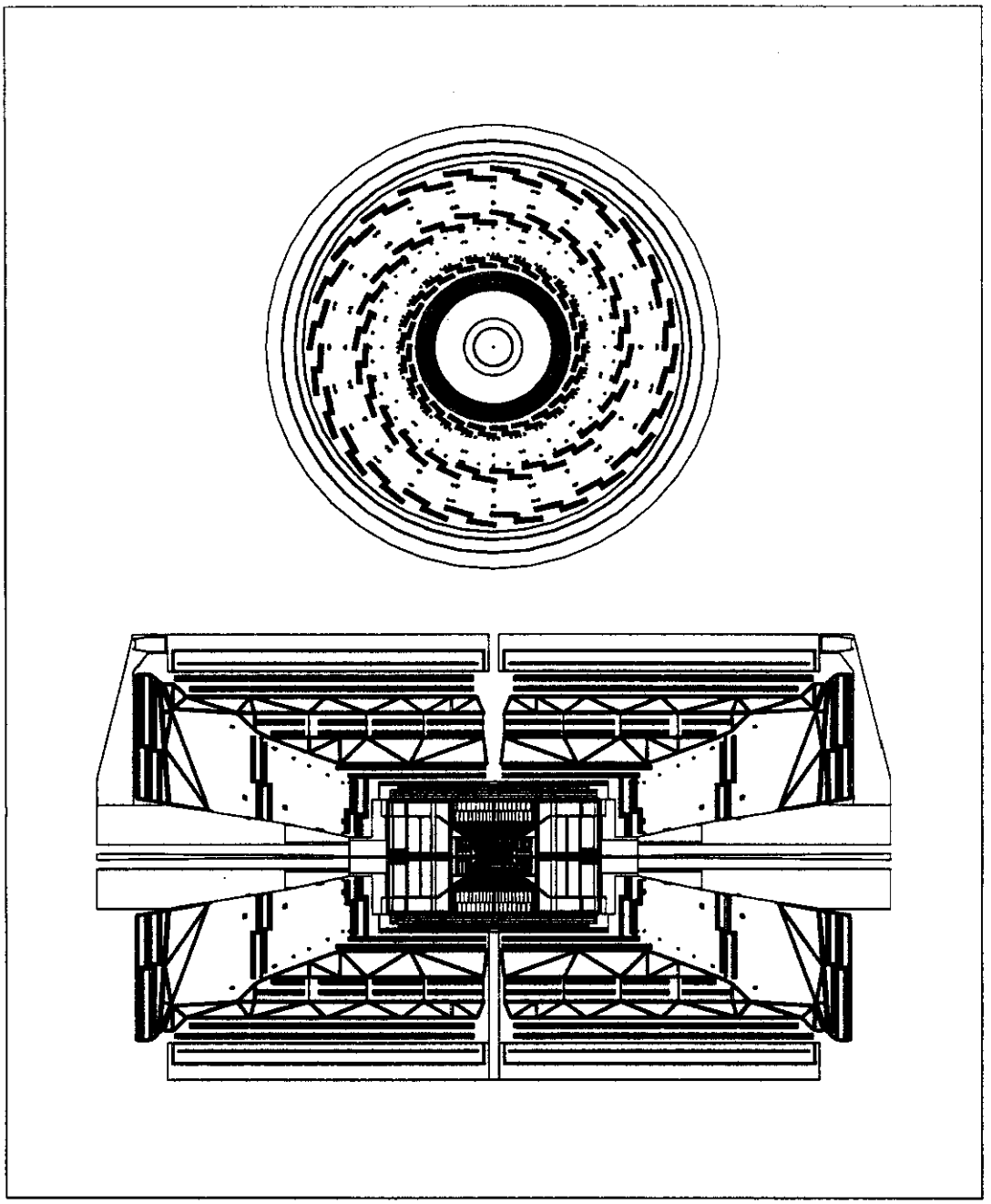

Figure 2: The GEM GEANT geometry model, side and end views

- The calorimeter is the Baseline 2 design (November 1992) and includes a mixture level description (except for the barrel and endcap accordion, which exact geometries have been provided by K.Shmakov).
- The Central Tracker is the Base line 2 design (November 1992) and includes support structures and cables.

2.4 UTGEM — Utilities package

The utilities include:

- routines to read and interpret FFREAD cards
- routines to read and create material/media/volume/detector element descriptions
- double precision vector and matrix manipulation packages
- an input/output package
- routines with updates forthe current version of GEANT

2.5 REGEM — prototype of GEM reconstruction

For the moment this package contains the procedures for muon pattern recognition in the Muon system and global fitting with including the infthe Central Tracker. The approach used for reconstruction is completely based on the GEANT geometry, hits structures and GEANT tracking. This includes:

- Track segment finding and fitting in each muon superchamber
- Track fitting on the basis of the track segments found in the muon system
- Track fitting on the basis of hits in the muon system
- Pickup of hits from the Central Tracker and global fitting of the track.

As an example of single muon reconstruction on the basis of muon track segments, hits in the muon system and global fit muon momentum using the GEM Central Tracker for barrel and endcap region it is shown in Fig.3 difference between fitted transverse momentum and generated one.

3 SIGEM file organization

SIGEM is placed in a directory tree with branches for different versions. Scripts to build and run SIGEM use environment variables to access needed files. The top of the tree is $SIGEM. An initialization script, $SIGEM/init/sigem.cshrc, will set up the

93/08/02 12.01

Transverse momentum resolution for μ^+ with p_T = 1 TeV/c

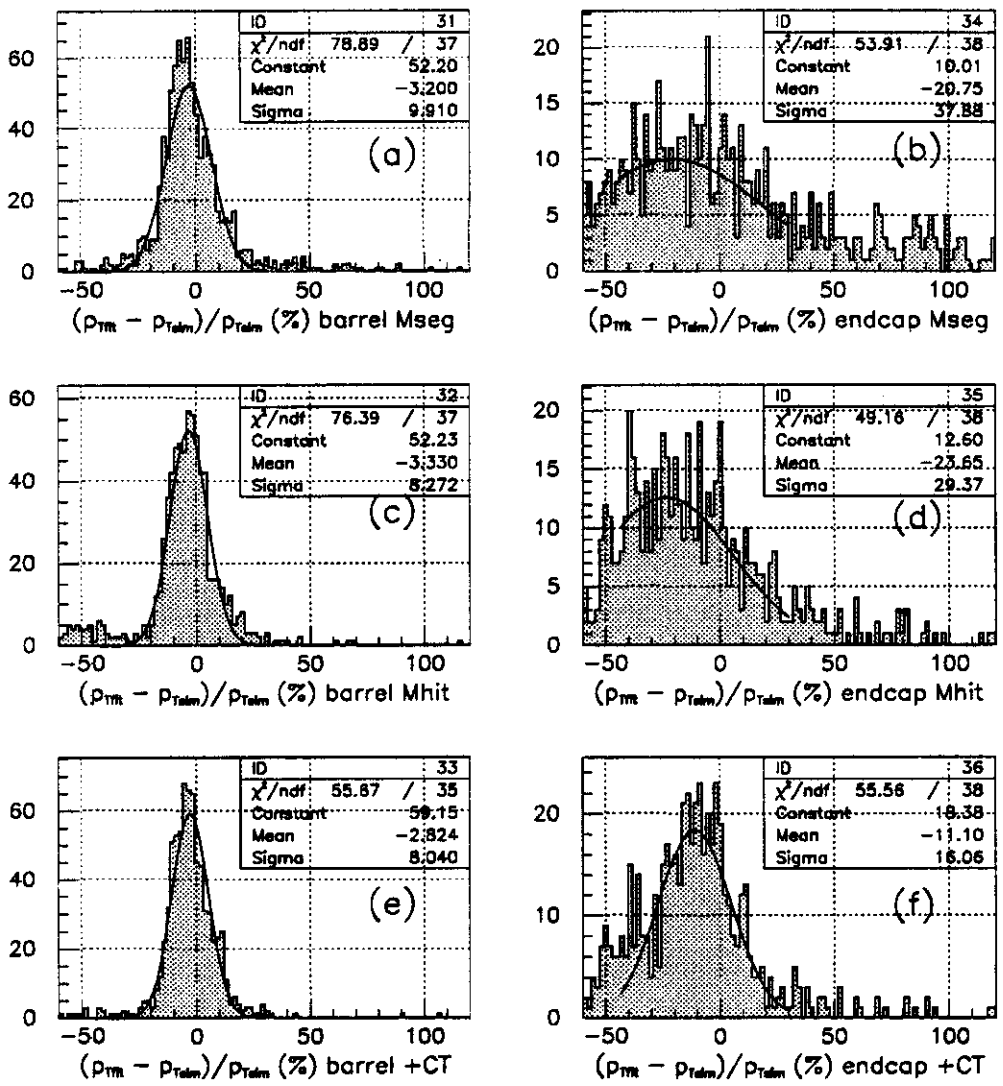

Figure 3: Distribution of differencies between reconstructed (fitted) and simulated p_T = 1 TeV/c for single μ^+ in the muon system barrel (a,c,e) and endcap (b, d, f) and using different types of information: reconstruction based on the track segments (a,b), found in the superchambers, hits in muon system (c,d) and global fit with the Central Tracker (e,f).

environment variables, including initializing or reading a file, $HOME/.SIGEM_LEVEL, to specify the version of SIGEM desired.

SIGEM can be accessed on PDSF via the 'gemlib' tree, in which case the environment variable SIGEM is /home/dssg1/gemlib/source/sigem. There is a parallel tree with a slightly different structure, in which additional operating system support is put, as described below.

The environment variables and the areas to which they point are as follows:

```
SIGEM == the top of the SIGEM tree
SIGEM_LEVEL == the version desired (see below for available versions)
SIGEM_ROOT == $SIGEM/$SIGEM_LEVEL -  root directory for given version
SIGEM_MGR  == $SIGEM_ROOT/mgr  - shell scripts for creation of libraries
              and executables
SIGEM_LOG  == $SIGEM_ROOT/log  - logfiles from above procedures
SIGEM_CRA  == $SIGEM_ROOT/cra  - CRAdles
SIGEM_CAR  == $SIGEM_ROOT/car  - CARd files
```

3.1 Files

```
$SIGEM/init/sigem.cshrc -  initializes SIGEM variables; this may be
      invoked in the user's .cshrc file, and may also be copied to
      the user's area for tailoring.
$HOME/.SIGEM_LEVEL - specifies the version of SIGEM in use.
$SIGEM/dat -  contains the data files with neutron cross sections for
             GCALOR calculation
$SIGEM_LOG  - logfiles from above procedures
$SIGEM_CRA  - CRAdles
$SIGEM_CAR  - CARd files

Under /gem, there are also:

$SIGEM_ROOT/src - fortran sources
$SIGEM_ROOT/lib - libraries
$SIGEM_ROOT/bin - executable, data files and required soft links
```

Under the other directory structure, there are machine-dependent files, which are selected by sigem.cshrc for each supported architecture: (hpx, sun, dec, sgi)

```
$SIGEM_ROOT/hpx/src - fortran sources
               /lib - libraries
               /bin - executable, data files and required soft links
               /car@ -> ../car/
               /cra@ -> ../cra/
               /mgr@ -> ../mgr/
```

3.2 Versions

SIGEM versions have been built on each of the four architectures of the Physics Detector Simulation Facility (PDSF) and VAX VMS. Except for the most recent version, these versions are frozen. The versions are as follows:

```
.SIGEM_LEVEL
    v0    GEM baseline 1c  04/08/92
          content:     sigem.ps    => GEM TN 92-162 with description of SIGEM
                       car/si.car    steering
                       car/xs.car    geometry
                       car/ut.car    utilities

    v0.1  GEM baseline 1c
          content:   + car/tt.car   titles including magnetic field, materials,
                                    and full GEM description via data cards
    v1.3  GEM baseline 2
          content:   + car/gc.car    CALOR   0.93/11  930305
                     + car/gf.car    GFLASH  1.41/00  930125
                     + car/re.car    REGEM   1.00/00  921026  21.11
                                     - GEM reconstruction

    v2.1   GEM TDR baseline with some post TDR corrections, current version:

    v2.2   The current version

    v2.2/car/gc.car  => CALOR   1.00/00  930427
             gf.car  => GFLASH  1.41/00  930125
             re.car  => REGEM GEM REconstruction
             si.car  => SIGEM GEANT3/GEM SImulation program steering
             tt.car  => TTGEM GEM TiTle data base  TDR version
             ut.car  => UTGEM GEM UTility routines
             xs.car  => XSGEM eXperimental Setup of GEM detector
             ba.car  => BAGEM Zebra BAnk description



         cra/silib.CRA => Cradle for library creation
             sigem.CRA =>   -"-      interactive version
             sigem_batch.CRA =>      batch version
             sigem_deb.CRA =>  Interactive debug version with muon fit
         log/*.log    => log-files
         mgr/silib.sh => shell script for creation library
             sigem.sh =>        -"-                executables

         hpx/src/ => fortran sources
            /lib/ => libraries
            /bin/ => executables +
```

```
fnt04     => FFREAD control cards
sigem.asd => title information:  field map, materials, etc
sigem.pyt => control cards for Pythia
hbook     => HBOOK rz file
rzin      => GEANT geometry input file
             (control by FFREAD card RGET 'INIT')
rzout     => GEANT geometry output file
             (control by FFREAD card RSAV 'INIT')
fzin      => GEANT event input file
             (control by FFREAD card GET 'INIT')
fzout     => GEANT event output file
             (control by FFREAD card SAVE 'TRIG')
pileup    => GEANT input file with pile-up events
chetc.dat => GCALOR data file
xsneut.dat=>    -"-

dec/
    the same as for hpx
sun/
    the same as for hpx
```

4 Usage SIGEM

The SIGEM program is the official GEANT simulation for the GEM muon system. All simulation studies of the muon system performance presented in the TDR are based on this program. These studies include

- muon momentum resolution
- estimation of correlated (electromagnetic debris and punch through) and uncorrelated (neutron and γ) backgrounds and their influence on the pattern recognition
- pattern recognition efficiencies

Work is in progress on the issue of finding algorithms which provide alignment of muon system on the basis of cosmic muons, punch through and beam halo particles.

In the Tabl.1 it is presented some time characteristics of SIGEM running on HP 720. "QCD events" is denoted events used for the simulation of muon trigger rates and cut all particles with $|\eta| \leq 3$ and $p_T \leq 2.5$ GeV/c. p_T^{QCD} denotes minimum transverse momentum cut for parton-parton interaction in PYTHIA.

5 Near future developments of SIGEM

The present version 2.2 reflects the TDR design and includes:

Table 1: Time of simulation of an event in SIGEM

Process	time on HP720
Single μ with p_T = 100 GeV/c	10 seconds
Single μ with p_T = 1 TeV/c	60 seconds
QCD event $1 \leq p_T^{QCD} \leq 4$	0.22 seconds
QCD event $4 \leq p_T^{QCD} \leq 8$	2.0 seconds
QCD event $8 \leq p_T^{QCD} \leq 16$	8.2 seconds
QCD event $16 \leq p_T^{QCD} \leq 32$	24.6 seconds
QCD event $32 \leq p_T^{QCD} \leq 64$	58.3 seconds
QCD event $64 \leq p_T^{QCD}$	125.7 seconds
min. bias with $\|\eta\| \leq 3$	3.1 seconds
DTU event for neutron flux calc.	5 hours

- digitization and formation of the muon system trigger primitives
- global muon track fitting in muon system and central tracker.

This version will be the last one completely based on GEANT 3.15/3.16.

The next version (3.0) will be based on the GEANT geometry package version 3.20. This geometry package uses surface geometrical volume definition (which allows an interface with CAD/CAM systems) and Boolean algebra of volumes. There are several advantages of this new system:

- we may be able for a CAD/CAM data base for geometry description because in the both CAD/CAM system and new GEANT geometry package it is used surface presentation of volumes
- in this geometry package it is built a binary geometry search tree which allows speed up the GEANT tracking stage by factor 2, and we expect that simulation of such complex devices as accordion calorimeter will be faster by more significant factor.

The work with new geometry package has been started and as an example of this work in Fig.4 is shown the full GEM detector setup including experimental hole, low beta quadrupoles, shielding obtained by ray tracing with new geometry package.

6 Long term plan — development of global GEM simulations

GEM is trying to move toward a unified global simulation package: unified in the sense that all the subsystems and simulations (muon, tracker, calorimeter and physics) will use the same program or suite of programs. They must use common data structures

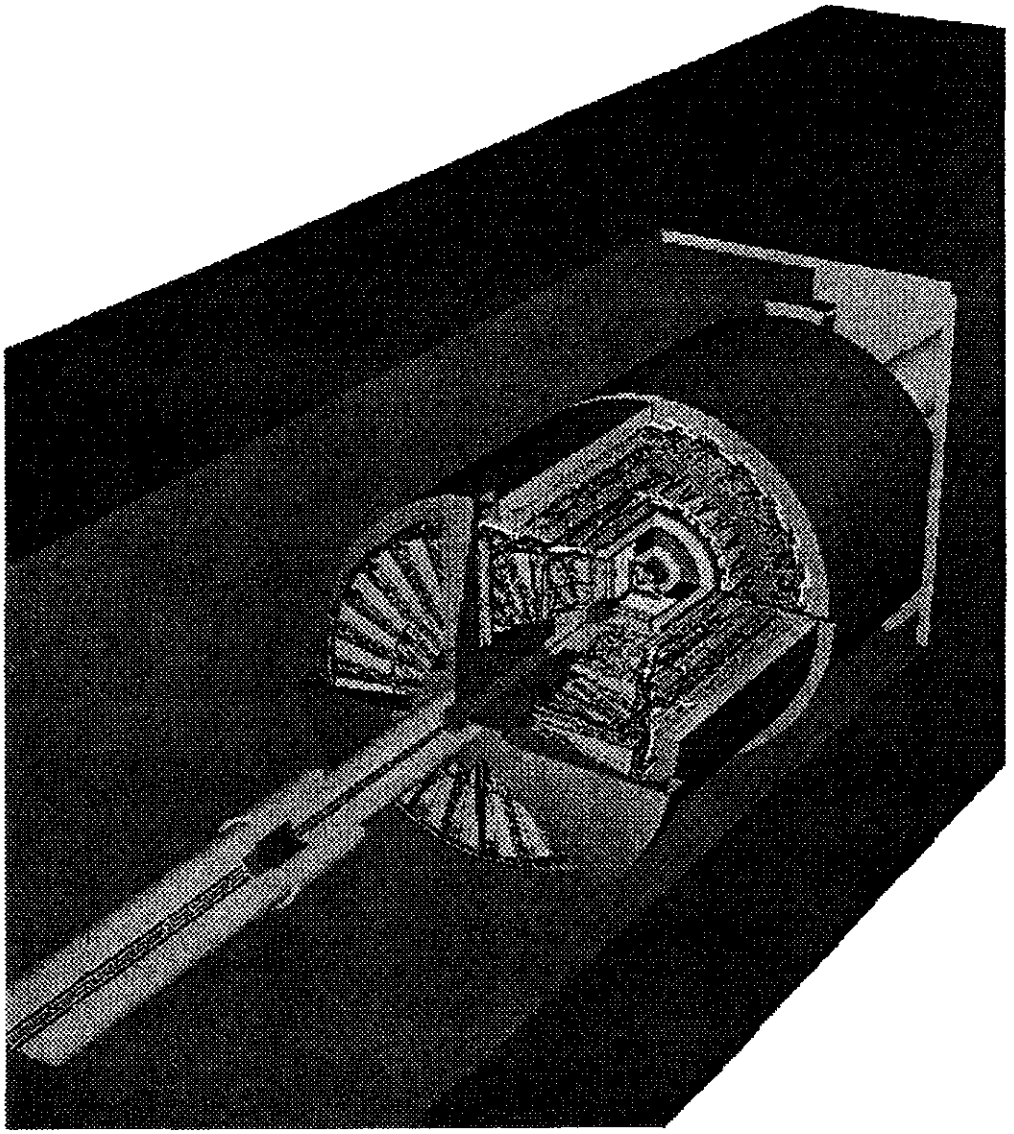

Figure 4: The GEM detector setup including the experimental hole obtained with GEANT 3.20 geometry package

but allow selection of various levels of detail. SIGEM is clearly an important component of this development. The simulation is needed to study issues such as:

- Evolution of detector design
- Fermilab calorimeter test beam (1995)
- Jet resolution, especially in barrel-EC, EC-FC regions.
- Forward Jet tagging
- Jet rejection
- Missing E_T resolution
- Combined detector reconstruction algorithms, eg electron and muon using tracker + calorimeter + muon system (a muon study is already underway)
- Trigger studies

A unified package would permit the generation of "standard datafiles" kept on disk and re-used by many analyses. The present simulation environment makes it hard to do this, because in addition to the SIGEM package described here, there is a fast parametrized package **gemfast** used for high-statistics physics studies; a separate central tracker GEANT simulation; and a distinct mixture-level calorimeter simulation (UAZMIX) used for missing E_T and jet resolution studies.

The common digitized data structures should allow a single piece of reconstruction code to read in any set of events generated by the package and, either reconstruct it or tell the user that it is inappropriate to do so (a track finder won't work on smeared 4-vectors, for example).

6.1 Projects

The development of the simulation package requires:

a) Geometry input

We should aim to develop a geometry input and definition package as a front-end which will handle the parameters needed for the creation, positioning and rotation of the GEANT volumes. This should be easily edited and should support future input from CAD systems (e.g. Martin-Marietta's models) and future output to other simulations like GISMO (for EGS simulations), MCNP, etc. We should investigate existing systems which offer partial or complete solutions to this geometry package; for example, Zebra Title banks as used in SIGEM, D0's RCP system, ZEUS's ADAMO-based system, Mike Shupe's ASCII files, Saul Youusef's Types-based geometry package, and the GISMO geometry system. We should incorporate an automated system to assign material and medium numbers, rotation matrices, etc.

b) Data structures

We will need the GEM "framework group" to provide a working solution for data structures and handling I/O which is callable from F77 and available on all 5 GEM unix platforms (plus VMS if possible) by 9/93. If this is not available we will use ZEBRA as a fall-back solution, with some layer of routines over it to permit later replacement. We will define a digitized data format and channel tags for reconstruction code development.

c) Steering and Integration

The new simulation package will incorporate as much as possible from the existing SIGEM package and combine it with gemfast, UAZMIX and the other GEANT simulations. At the very least, new steering and simulation-level selection routines will be needed to permit this. If resources permit, a more comprehensive code rewriting exercise would probably result in a more coherent result.

6.2 Milestones

We assume that the simulation and reconstruction issues listed above should be addressed as soon as possible and in code that has a long life-expectancy rather than by clogging the present setup. An additional constraint is set by the Fermilab test beam run. From D0 experience it would be extremely advantageous to have a detailed Monte Carlo simulation of the test beam in existence with events generated before the data taking begins. We assumed 6 months to code and debug the geometry for both the full GEM and testbeam setups and 3 months spent generating data. This leads to the following timescale:

- 6/93: evaluate geometry builder and data structures solutions
- 9/93: coding and debugging full GEM geometry
- 3/94: coding and debugging test beam geometry based on full detector
- 9/94: begin generating data
- 1/95: TB data taking starts