GEM TN-93-425

GEM SBC (Scintillating Barrel Calorimeter) Meeting with CIS Collaborators

ITEP, Moscow, Russia

June 7-8, 1993

Abstract;

Agenda, attendees and presentations of the GEM SBC (Scintillating Barrel Calorimeter) meeting with CIS Collaborators held at ITEP, Moscow, Russia on June 7-8, 1993.

GEM SBC

(Scintillating Barrel Calorimeter)

Meeting

With CIS Collaborators

ITEP, Moscow, Russia

June 7-8, 1993

Workshop on Calorimetry

ITEP, Moscow, Russia, June 5-8, 1993

Agenda for June 7

June 6 Free day (The tour to Zagorsk)

June 7 9:00 at ITEP, Chair-Yuri Kamyshkov

+ SBC system. An introduction.	Yu.Kamyshkov	20'
+ Jet resolution in GEM and SBC	A.Savin	20'
+ Missing Et and SBC	K.Shmakov	15'
+ Muons in SBC (for Yu.Efremenko)	Yu.Kamyshkov	15'
+ PMT readout and cal/mon system	N.Akchurin	20'
— Alternative readout schemes	D.Winn	15'
+ Light collection, uniformity etc.	E.Tarkovsky	20'
+ General GEM construction schedule	B.Wisniewski	20'
+ Tiles/Fiber R&D program & schedule	J.Reidy	30'
Discussions		30'
Lunch at ITEP 12:30 pm - 1:30 pm		60'
+ Quality control and acceptance tests	R.C.Shang	20'
+ SBC production schedule	S.Chae	15'
+ Design, requirements, construction options, passive absorber, central det. support	M Rennich	60'
— Belarus status report	???	30'
— Kurchatov Inst. status report	???	30'
— INR status report	???	30'
+ Discussions	Yu. Kamyshkov	60'

Adjourn at 5:30 pm

June 8 9:00

Visit to INR and/or Kurchatov

A G E N D A

of Executive Committee Meeting, ITEP, 4 June 1993, 9:30 - 17:00

1.	Introduction	B. Barish	10'
2.	GEM Overview	G. Sanders	15'
3.	Moscow State University	P. Ermolov	20'
4.	Lebedev's Institute	A. Shmeleva	15'
5.	MIPhI	B. Dolgoshein	15'
6.	Inst.Nucl.Physics(Minsk)	N. Shumeiko	20'
7.	Powder Metallurgy Inst.(Minsk)	O. Roman	15'
8.	Kurchatov Center	V. Man'ko	20'
9.	Kazakhstan	E. Boos	15'
10.	Erevan Phys.Institute	G. Bayatian	15'
11.	Novosibirsk Inst. Nucl. Phys.	V. Sidorov	15'
12.	Discussion		30'

Lunch 13:00 - 14:00

Tour ITEP 14:00 - 15:00

13.	PNPI (Gatchina)	A. Vorobiev	30'
14.	JINR (Dubna)	I. Golutvin	30'
15.	ITEP	A. Golutvin	30'
16.	Discussion		30'

Adjourn 17:00

Workshop on Calorimetry
ITEP, Moscow, Russia
June 5-8, 1993

Distribution list

I. Institute for Theoretical and Experimental Physics (ITEP)
B. Cheremushkinskaya ul. 25
117259 Moscow, Russia

1. Prof. M. Danilov
2. Prof. A. Golutvin
3. Dr. V. Khovansky
4. Dr. E. Tarkovsky
5. Dr. Yu. Kamyshkov
6. Dr. K. Shmakov
7. Dr. A. Savin

} Окрідас.

8. Dr. V. Stolin
9. Dr. V. Rusinov
10. Dr. S. Boyarinov
11. Dr. S. Kuleshov
12. Dr. V. Tchistilin
13. Dr. P. Shatalov
14. Dr. I. Tikhomirov
15. Dr. A. Artamonov
16. S. Kruchinin

II Kurchatov Institute of Atomic Energy
Ulitsa Kurchatova 46,
123182 Moscow, Russia

1. Dr. M. Vasiliev
2. Dr. V. Mańko
3. Dr. E. Monich
4. Dr. A. Lebedev
5. Acad. S. Belyaev

III. Institute of High Energy Physics
Serpukhov (Protvino), Moscow Region,
Russia.

1. Prof. S. Denisov
2. Prof. A. Zaitsev
3. Dr. A. Solodkov
4. Dr. V. Sytnik
5. Dr. R. Shuvalov
6. Dr. N. Fedyakin
7. Dr. Yu. Gilitskii
8. Dr. V. Medved'
9. Dr. A. Spiridonov
10. Dr. S. ~~Mizyara~~ Misura
11. Dr. A. Vorobyov
12. Dr. E. Starchenko

IV. Institute of High Energy Physics NAS
480082 Alma-Ata 82,
Kazakhstan, CIS

1. Dr. Nurgozin N.N.
2. Prof. E. Boos
~~3. Dr. I. Kuchin~~

V. Lebedev Institute of Physics (FIAN)
Leninsky Prospect 53,
117924 Moscow, Russia

1. Dr. A. Shmeleva
2. Dr. V. Tikhomirov

VI. National Scientific and Educational Center of Particle and High Energy Physics
Minsk, Belarus, CIS

1. ~~N. Shumeiko Academ.~~ Prof. N. Shumeiko
2. Dr. A. Kurilin
3. Dr. M. Baturitsky

VII. Belorussian Research and Production Association of Powder Metallurgy.
Platonov ul. 41,
220600 Minsk, Belarus, CIS

1. Academ. O. Roman
2. Dr. R. Stefanovich

VIII. Moscow Physics Engineering Institute
Kashirskoe Shosse 31,
115409 Moscow, Russia

1. Prof. B. Dolgoshein

IX. Institute of Nuclear Physics
630090 Novosibirsk, Russia

1. Prof. V. Sidorov
2. Dr. V. Panin

X Yerevan Physics Institute
Alikhanian Brothers street 2,
375 036 Yerevan 36,
Armenia, CIS

1. Dr. G. Bayatyan
2. Dr. Z. Petrosyan

XI USA.

1. Barry Barish Caltech
2. Bill Willis Columbia Univ.
3. Gary Sanders SSC
4. Harvey Newman Caltech
5. Ya-Nou Guo SSC/
6. Rencheng Shang SSC/Tsinghua Univ.
7. Ken McFarlan SSC
8. John Rutherfoord Arizona Univ.
9. Mark Rennich ORNL
10. Steve Chae ORNL
11. Jim Reidy, SSC/Univ. of Mississippi
12. Bill Wisniewski SSC
13. Nural Akchurin Iowa Univ.
14. Bob Webb Texas A&M Univ.
15. Dave Winn Fairfield Univ.
16. Jim Sullivan Boston Univ.
17. Ryszard Stroynowski SMU

+ GEM@LIST

gem

γeμ

Presentation by:

Yu. Kamyshkov
ITEP/ORNL

Purposes of June 7-8 ITEP meeting

1. To identify SBC collaborators in CIS;
2. Supply collaborators with most recent information on SBC;
3. To identify areas of contributions to SBC;
4. Help CIS collaborators to prepare institutional proposals (MoU) for GEM;
5. Collect information on possible production options including cost, schedule, transportation etc. issues

GEM DETECTOR PARAMETERS
BASELINE 2

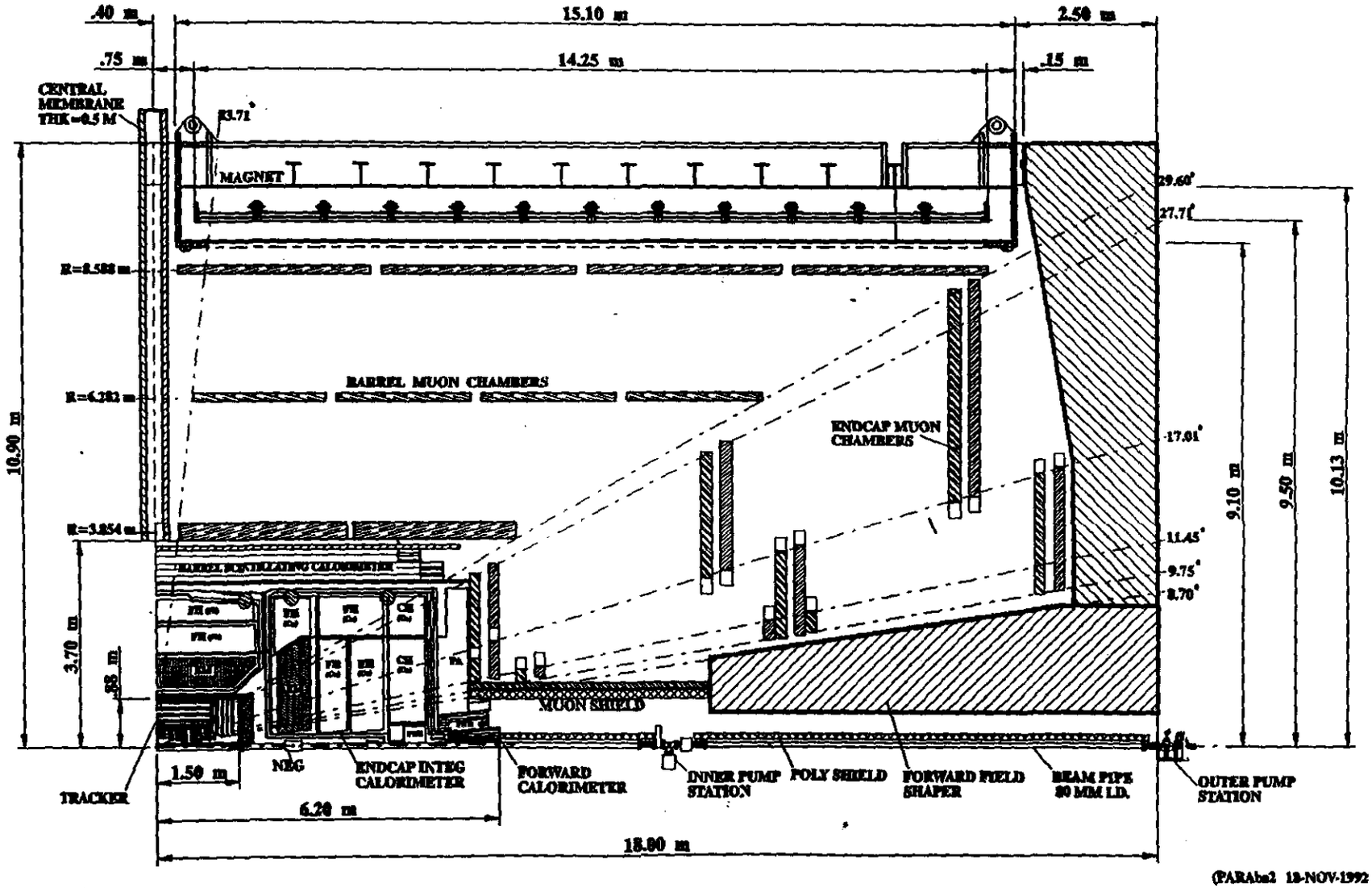

(PARAbs2 18-NOV-1992)

Noble Liquid Calorimeter Overview

All dimensions are in mm.

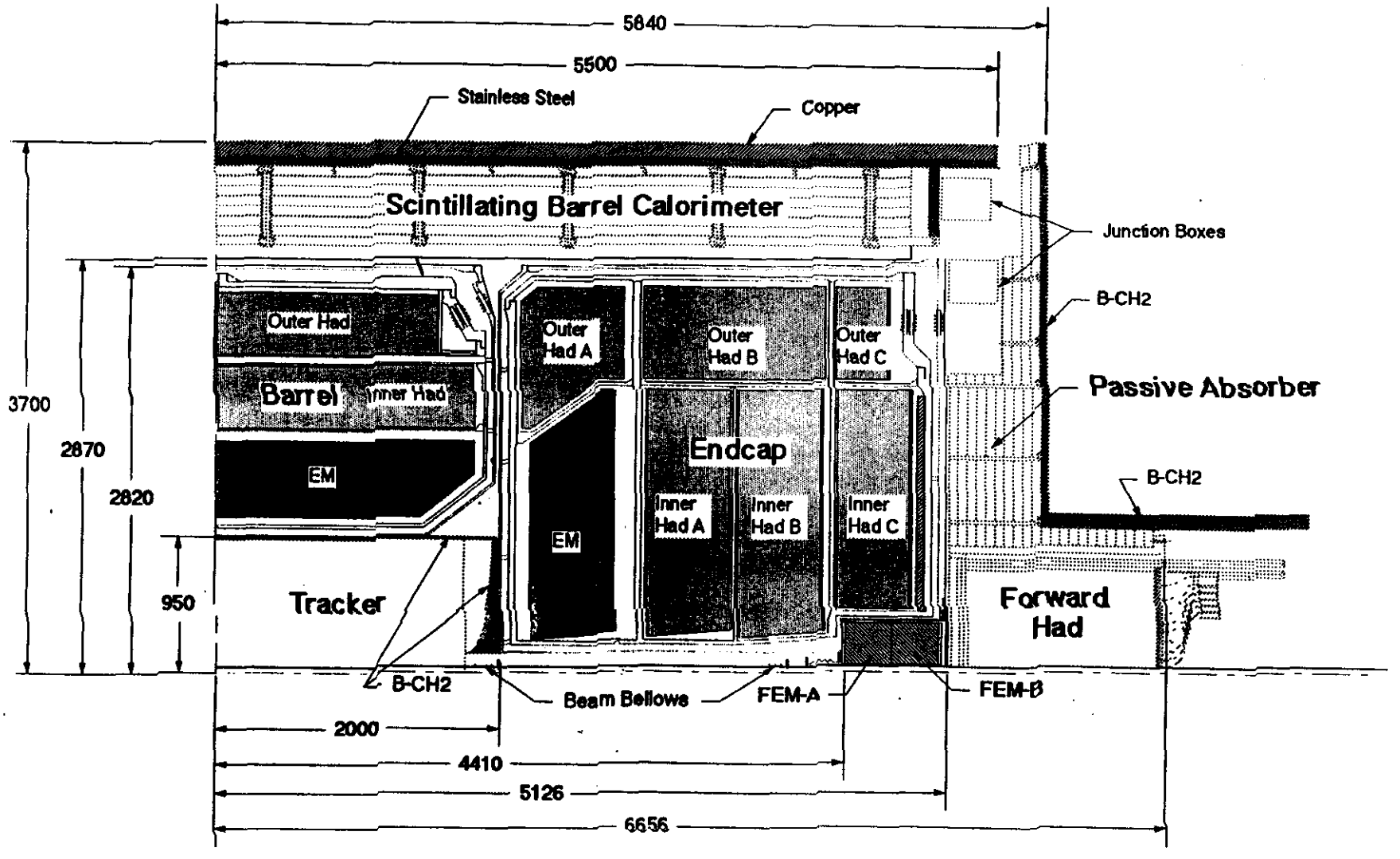

Barnstable: Overview:930426
3/15/93BarSlt.Cold.Cu/Warm.Cu
3/15/93NdcpSlt.Cold

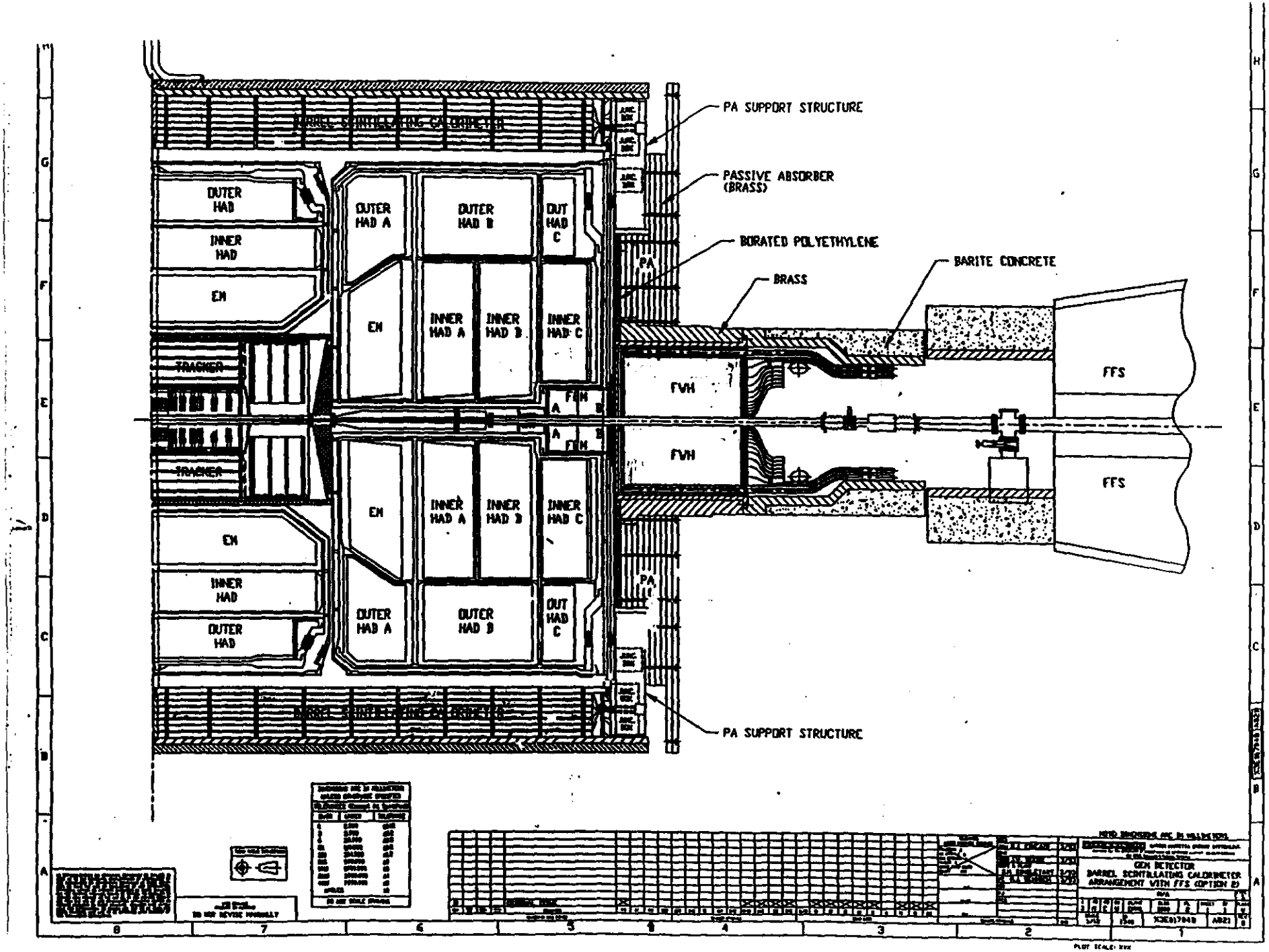
PA SUPPORT STRUCTURE
PASSIVE ABSORBER (BRASS)
BORATED POLYETHYLENE
BARITE CONCRETE
BRASS
OUTER HAD
INNER HAD
EM
TRACKER
OUTER HAD A
OUTER HAD B
OUT HAD C
INNER HAD A
INNER HAD B
INNER HAD C
FVH
FTH
PA
FFS
PA SUPPORT STRUCTURE
GEM DETECTOR
BARREL SCINTILLATING CALORIMETER
ARRANGEMENT WITH FFS (OPTION B)

GEM External Calorimeter

Consists of :

a) Scint. Barrel Calorimeter (SBC)

b) End-cap Passive Absorber (PA)

c) Forward Hadron Calorimeter (FHC)

It is assumed that Russian institutions will play an important role in the construction of these systems

During the GEM / CIS - groups meeting on June 4, 93 possible conributions to GEM EC will be discussed

SBC (Scintillator Barrel Calorimeter)

- First GEM detector subsystem!
- Model for managment, engineering, international cooperation in GEM
- First modules will be built in US
- Production scenario
- R & D issues
- Conceptual design exists!

gem

γeμ

Presentation by:

A. Savin
ITEP/ORNL/UAZ

Scintillating Barell Calorimeter

A. Savin ITEP/ORNL/UAz

How can it improve Jet Energy resolution ?

A. Savin 06/07/93
ITEP, Moscow

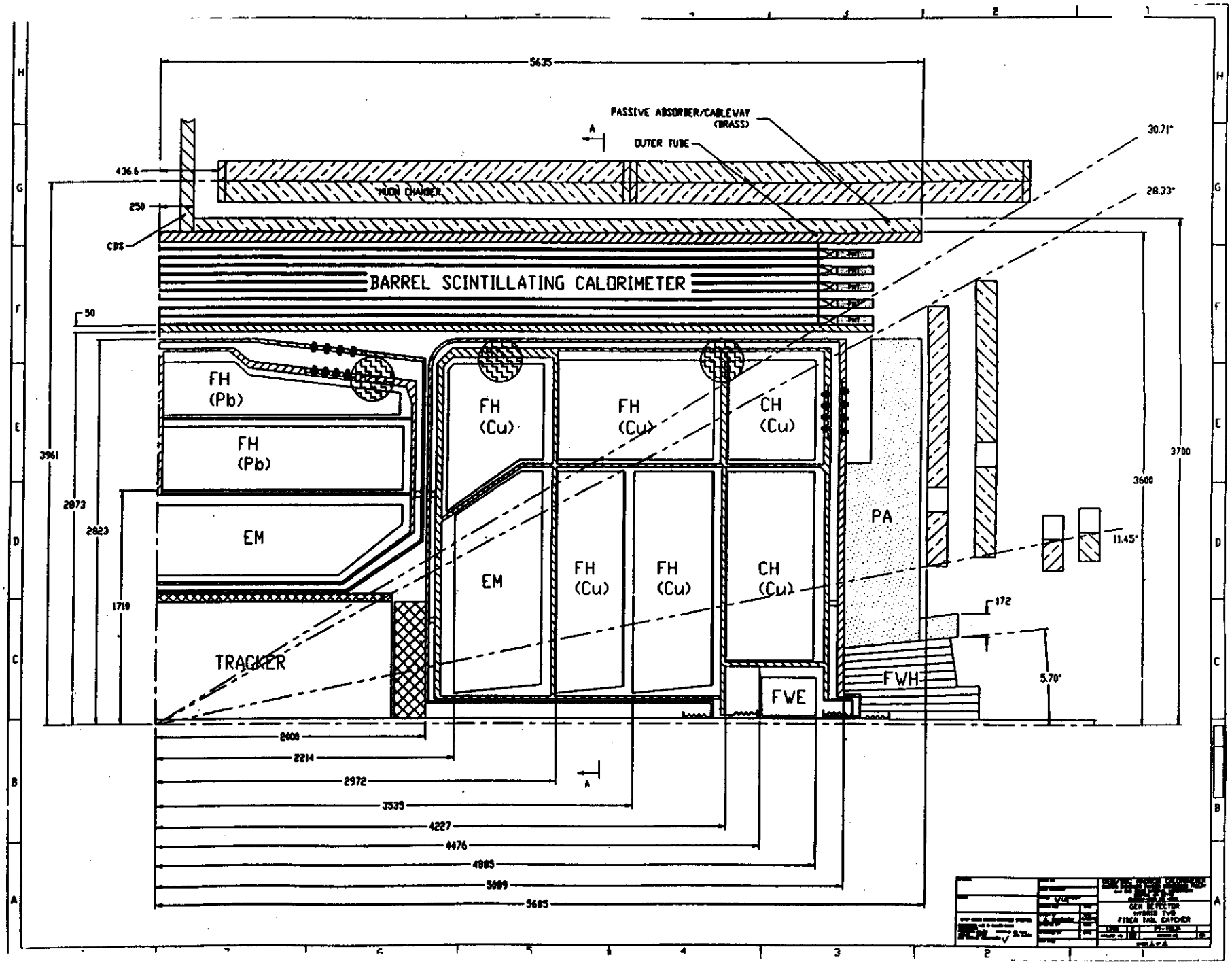
5635
PASSIVE ABSORBER/CABLEWAY (BRASS)
OUTER TUBE
MUON CHAMBER
BARREL SCINTILLATING CALORIMETER
CDS
4366
250
50
3961
2873
2823
1710
FH (Pb)
FH (Pb)
EM
TRACKER
FH (Cu)
EM
FH (Cu)
FH (Cu)
CH (Cu)
CH (Cu)
PA
FWE
FWH
30.71°
28.33°
11.45°
5.70°
3700
3600
172
2000
2214
2972
3535
4227
4476
4985
5009
5685
A

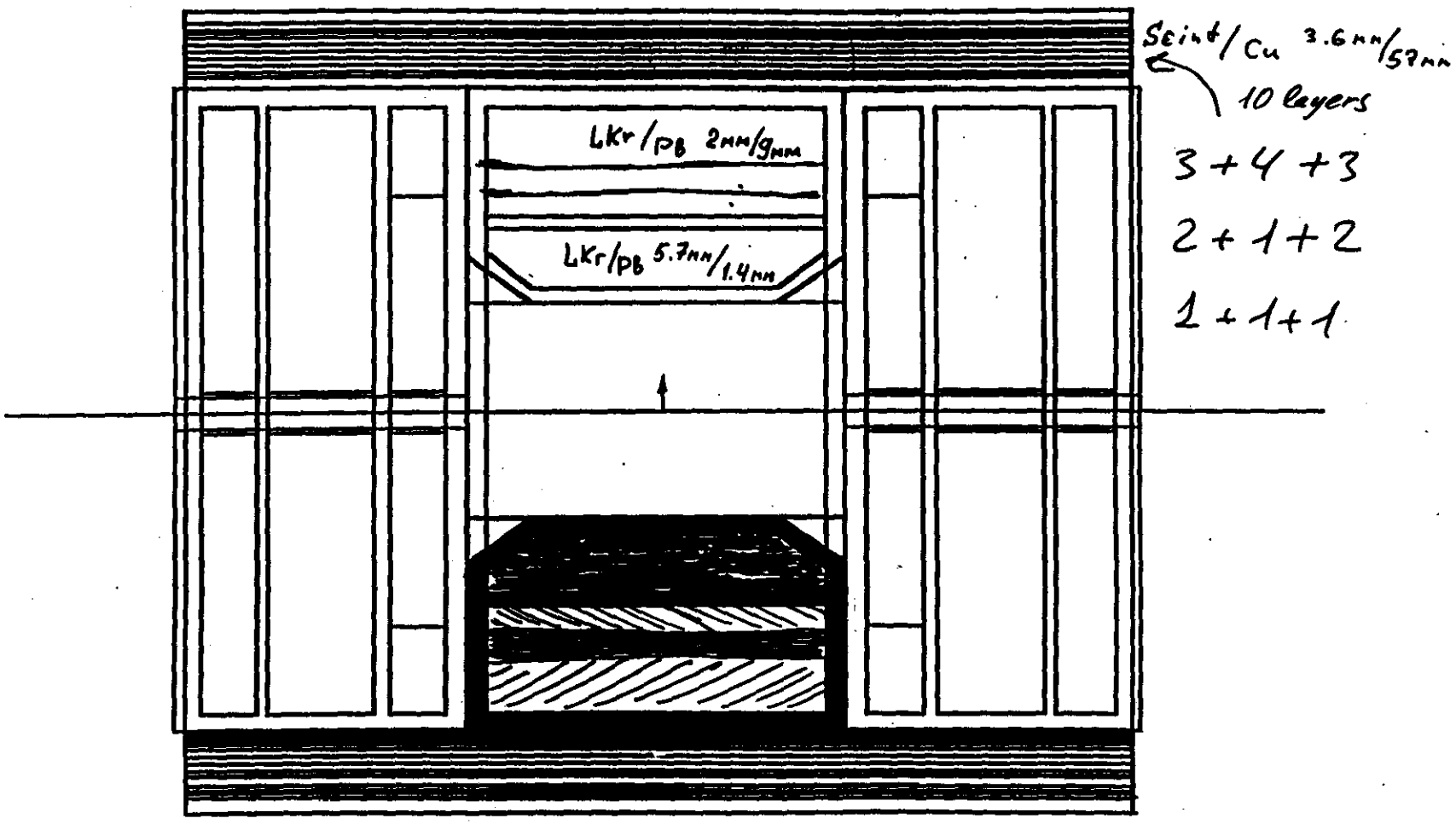
Scint/Cu 3.6mm/57mm
10 layers
3+4+3
2+1+2
1+1+1
LKr/Pb 2mm/9mm
LKr/Pb 5.7mm/1.4mm

Segmentation

1) EM section - Parallel Plates analog of Accordeon.

   1.4mm Pb + 5.7mm LKr

   3 segments: 4X0 + 8X0 + 13X0

2) HC section - 9mm Pb + 2mm LKr

   3 segments: 1.25L + 1.25 L + 2.5L

3) Scintillating Barrel :

   10 Layers 57mm Cu + 3.5mm Scint.

Jet simulation (A.Savin)

- o PYTHIA + GEANT 3.15 at 90 degree

- o Energy resolution prediction with GEANT ???
  The task -> study SB instrumentation effect on resol.

- o Pb/LKr EM : 3 sections ---> 1 section
  Pb/KKr HC : 3 sections ---> 1 section

  Cu/Scint TC : N sections : 0 - 10 sections

  in R2 - R1 = 60 cm

- o If SB is not instrumented -> longitudinal segmentation in EM and HC should compensate for missing energy --> weighting scheme

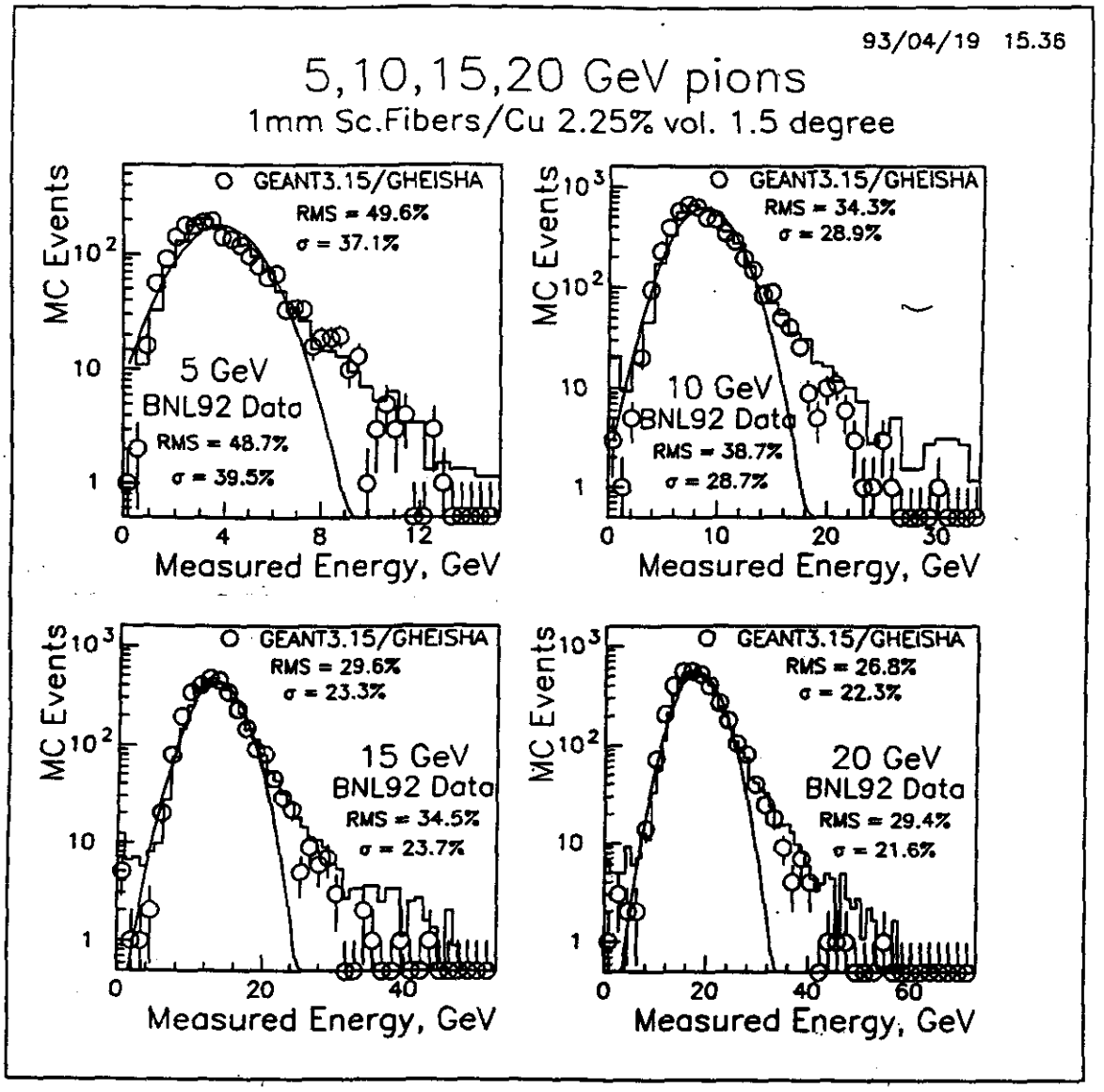

Figure 1: ***Compareson of MC results with beam test data***

Choice of absorber

for the liquid hadronic section

Detector	Absorber	e/mip	e/h	constant term res. hadrons %
LAr	Cu	0.91	1.65	9.5 %
	Pb	0.66	1.39	5.8 %
LKr	Cu	1.05	1.90	13.5 %
	Pb	0.73	1.53	8 %

Constant term $\simeq 14\% \cdot (|e/h - 1|)$ hadrons

- C.T. (jet) < C.T. (hadrons)
- weighting : improves C.T.
  (longitudinal segmentation)

HADRONIC BARREL CALORIMETRY

	Pb	Cu	
e/π (10 GeV)	1.32	1.44	GHEISHA
Resolution	56%/√E	56%/√E	CALOR 89
constant term	(B) ⊕ 6.5%	⊕ 9%	TN-93-383
Active λ	3.7	4.2	Effect on resolution? on muons?
Rad length (active	113	44	Effect on muons
Cost $/lb	1.40	1.80	density ratio 1.27
Handling cost	higher	lower	5-10% effect at most
Available in PRC	?	Yes	Needs check.

Note: Lead is „60s" Calcium Lead

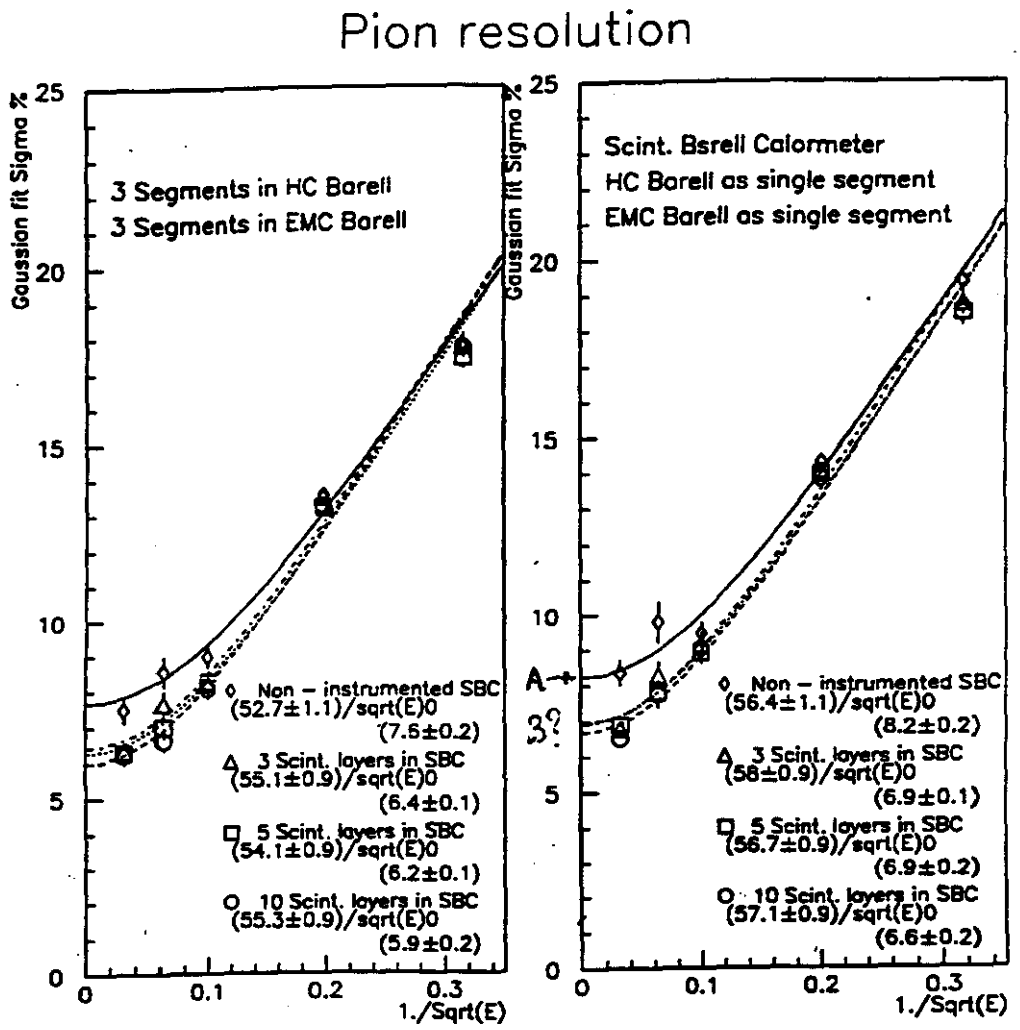

Figure 22: *Parametrization of pion resolution*

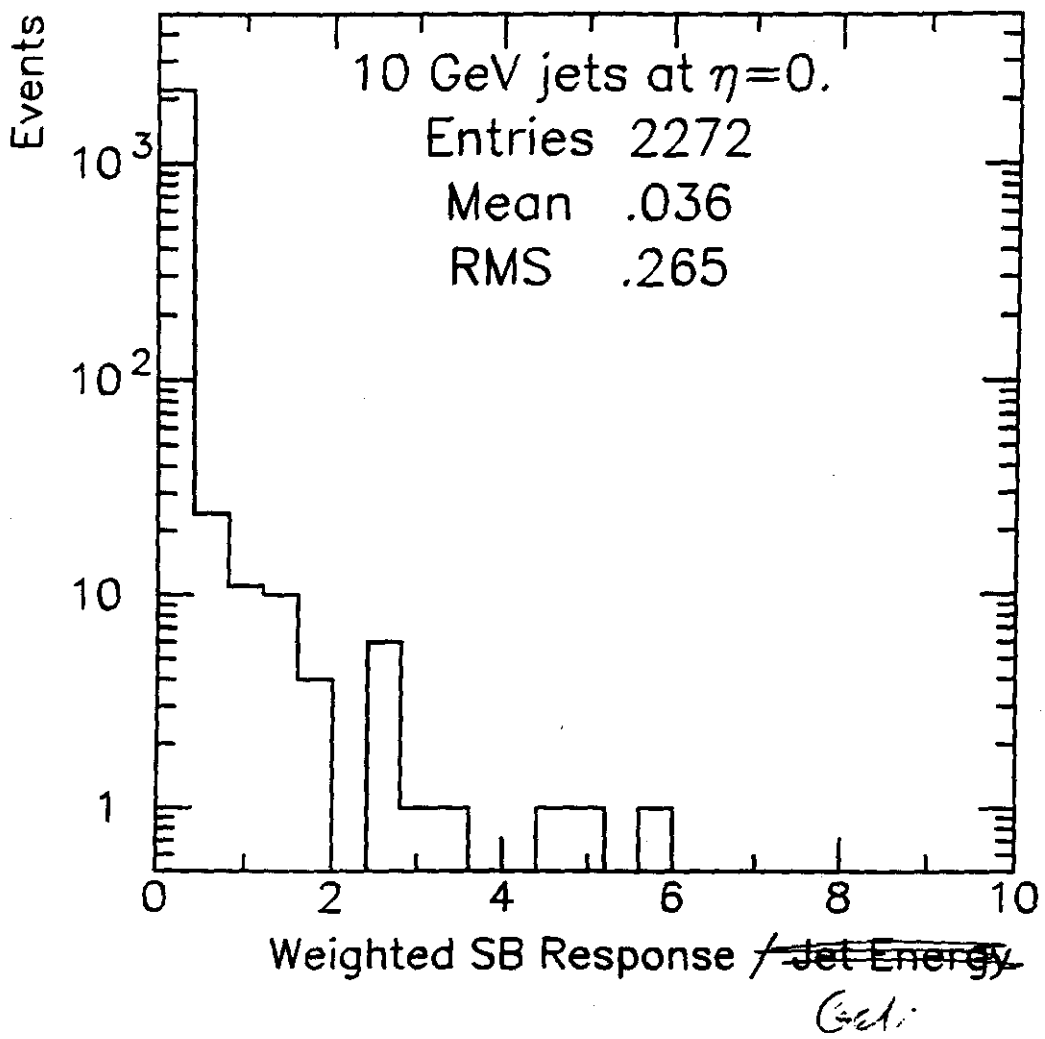

Figure 3: *SB/TC spectrum for 10 GeV jets*

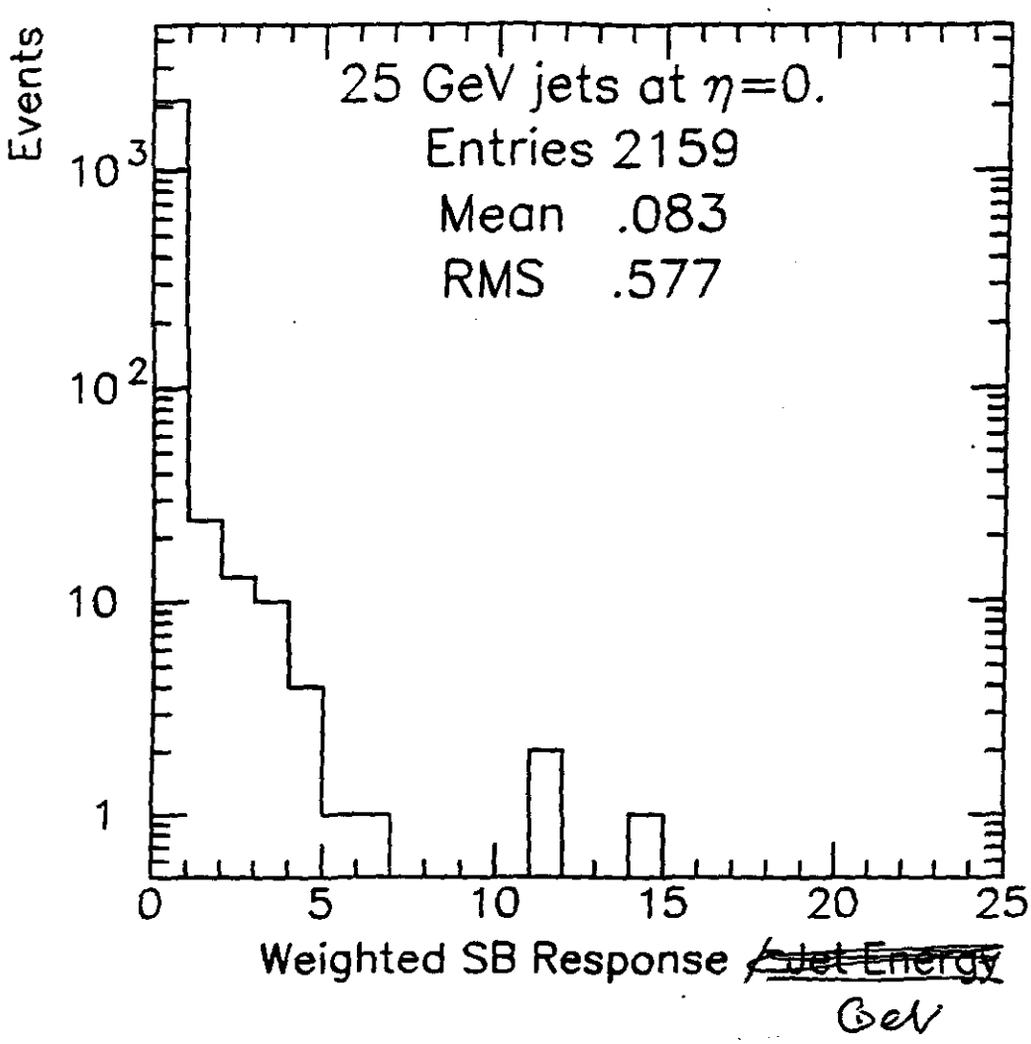

Figure 4: *SB/TC spectrum for 25 GeV jets*

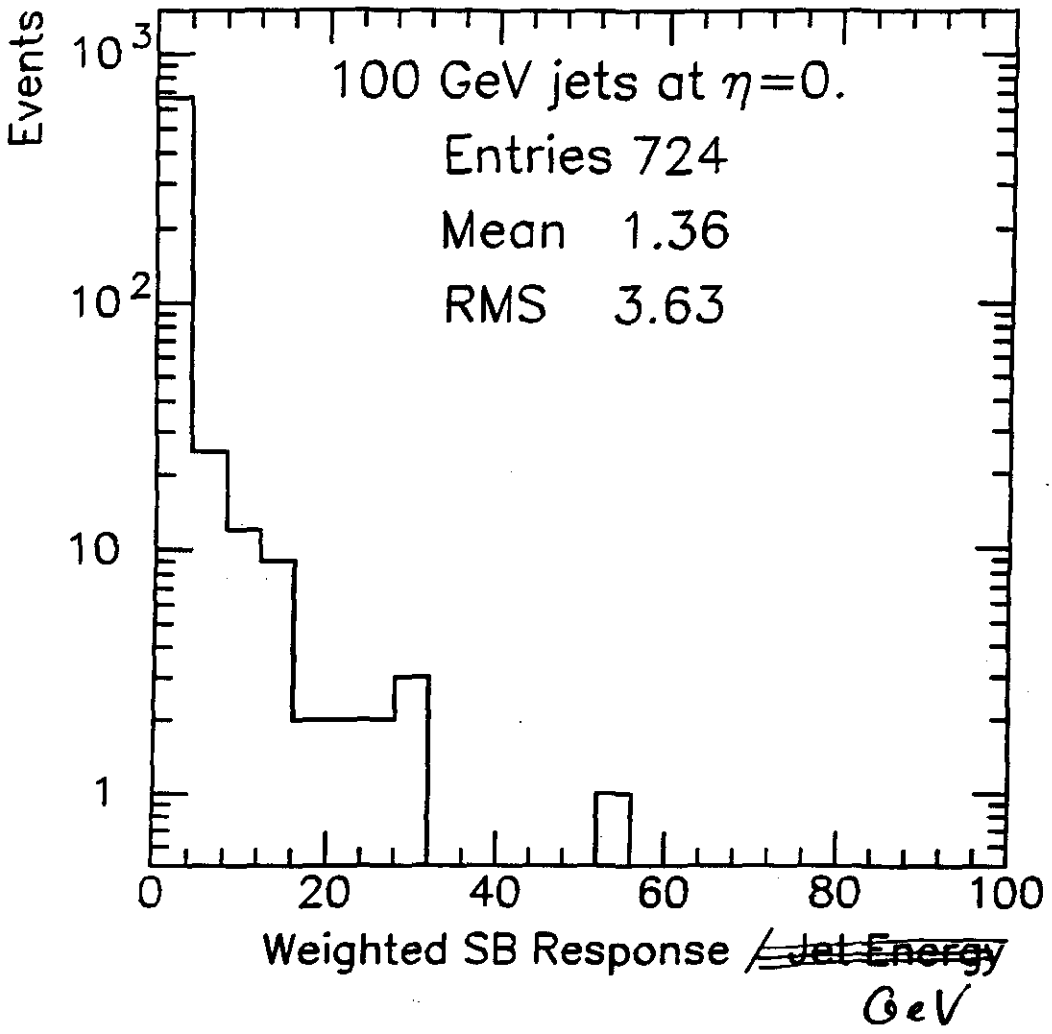

Figure 5: *SB/TC spectrum for 100 GeV jets*

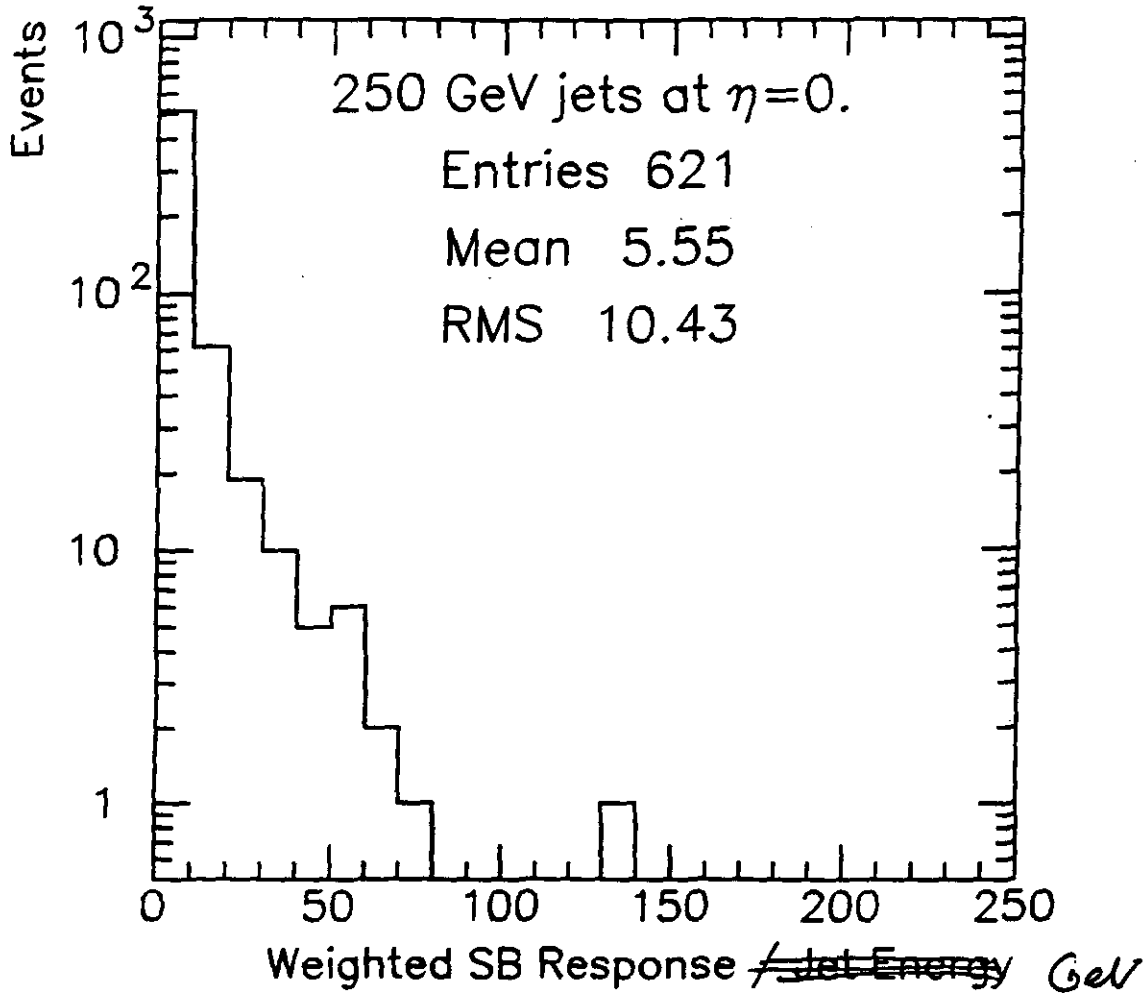

Figure 6: *SB/TC spectrum for 250 GeV jets*

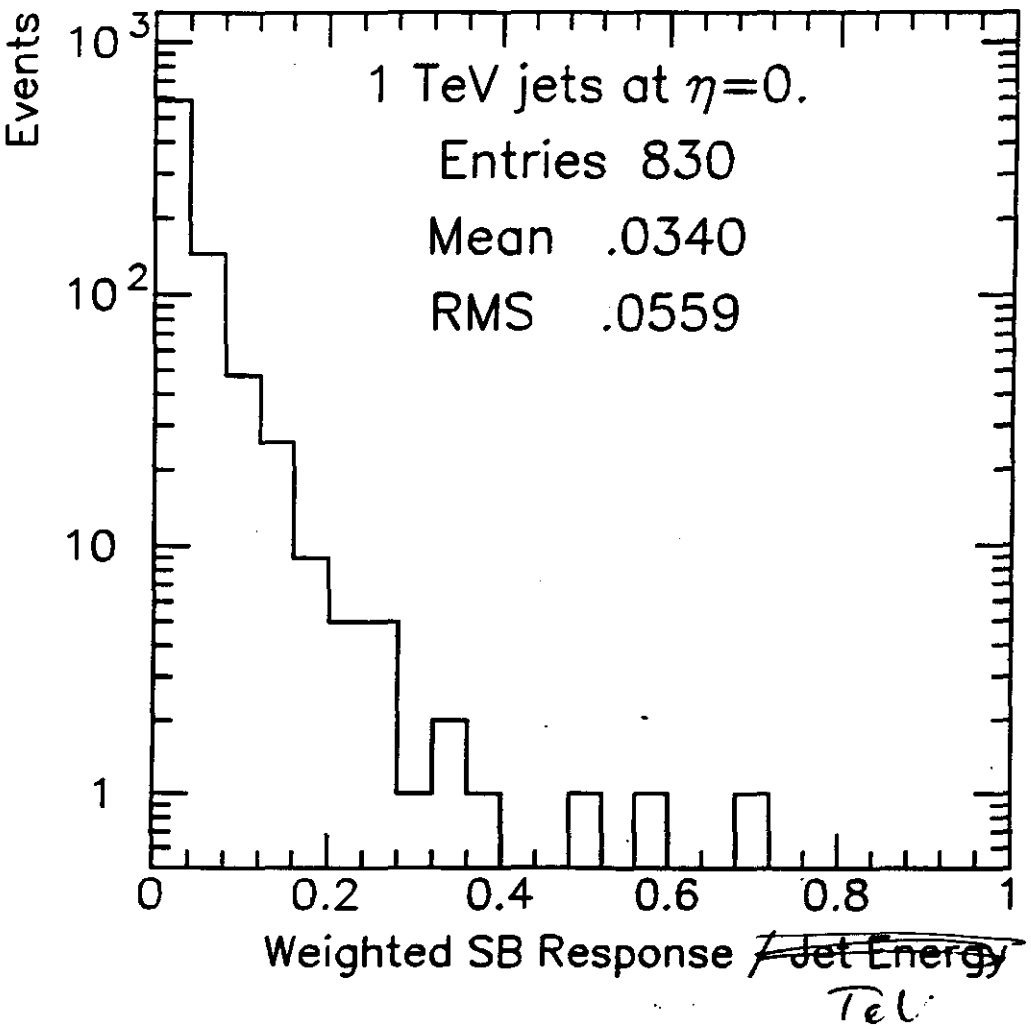

Figure 7: *SB/TC spectrum for 1 TeV jets*

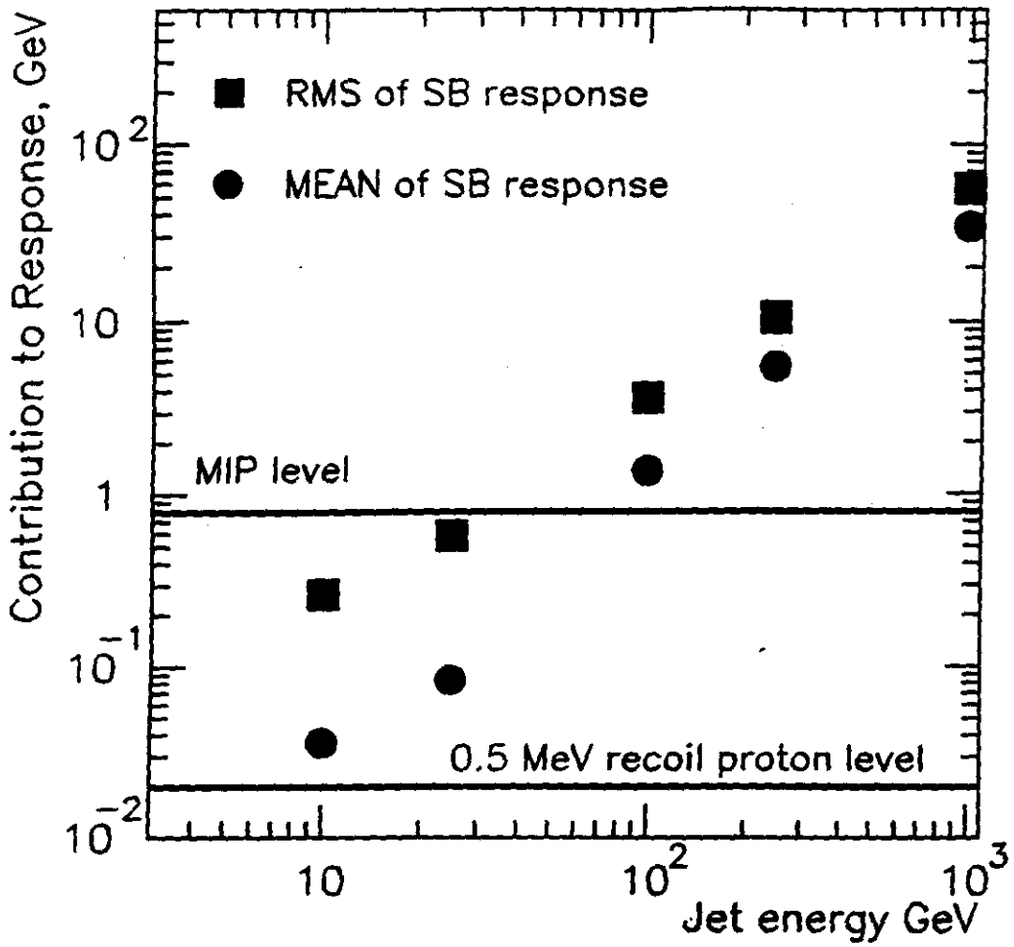

Figure 2: *SB/TC response and RMS vs Jet energy*

Weighting procedure

I. Linear weighting with
Energy-depending weights

II. Procedure :
1) Minimum RMS + linearity
2) Repeat step 1 without events
out of 3 Sigma.

III. 50%/50% test :
Weights were calculated on 50% of
events and then applied to other 50%.

Result same as for 'self-weighting'

IV. Regular behavior of weights vs Jet Energy -
possibility for correct Energy reconstruction
procedure.

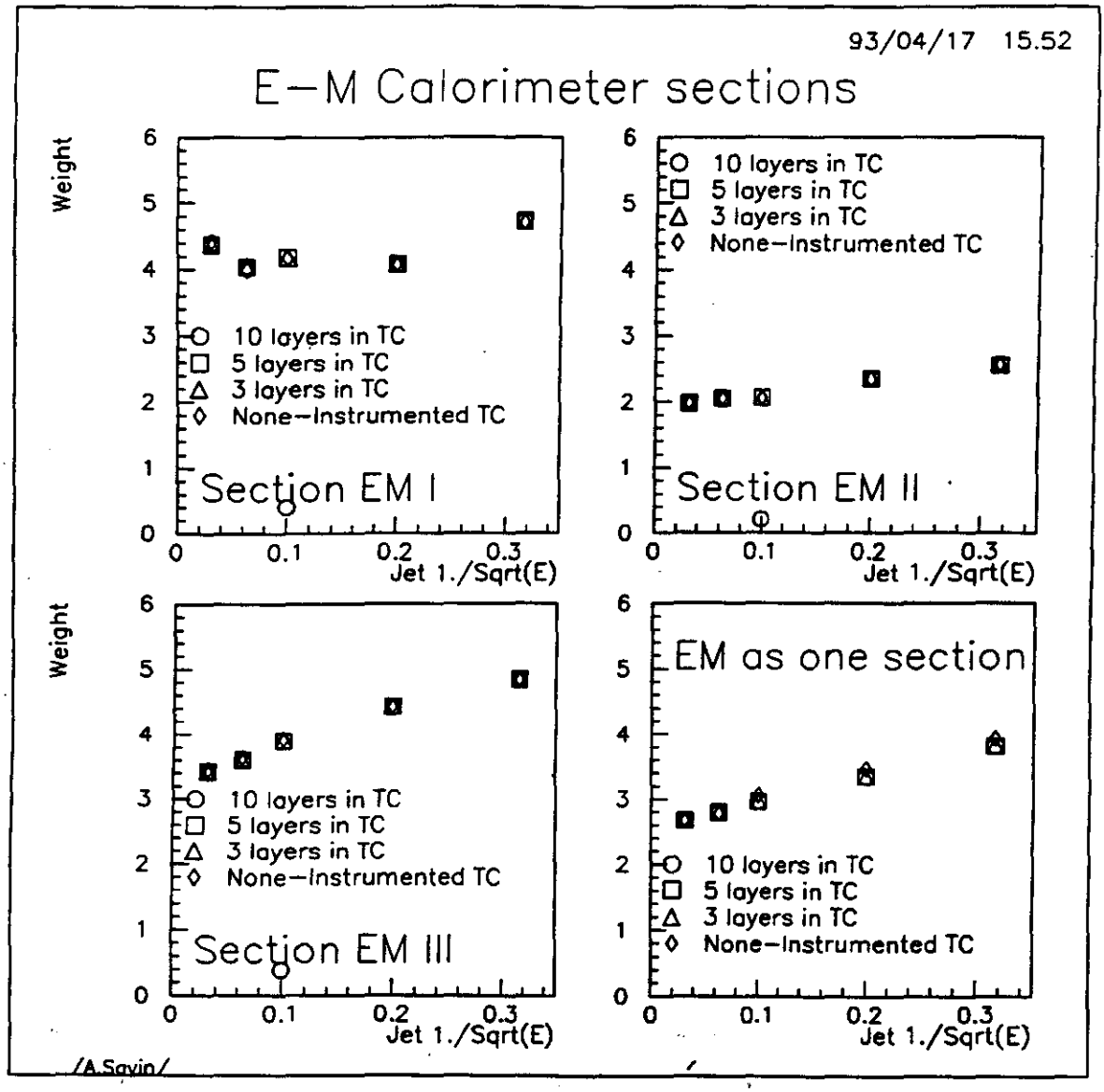

Figure 8: ***Weights for EM sections***

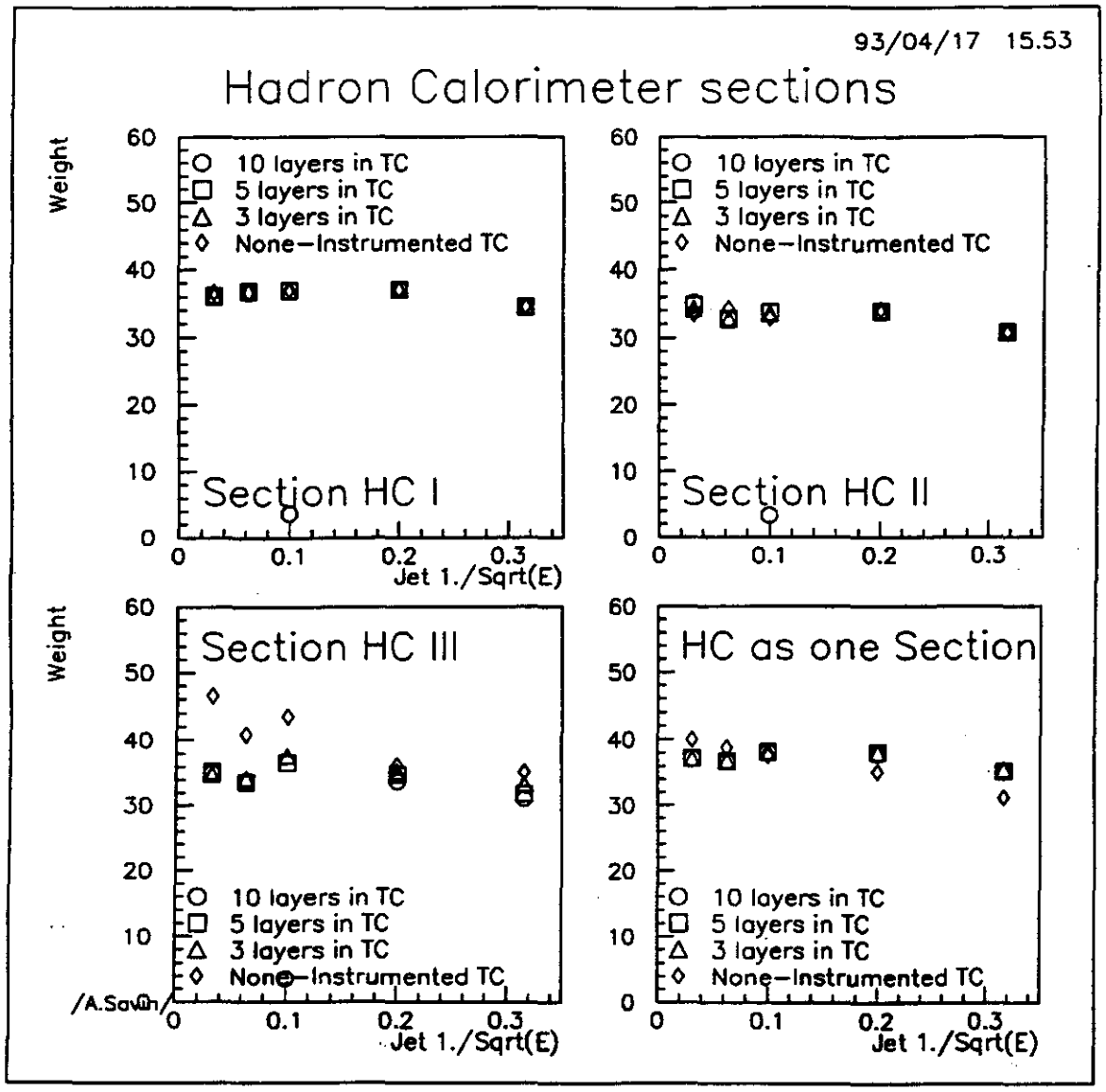

Figure 9: ***Weights for HC sections***

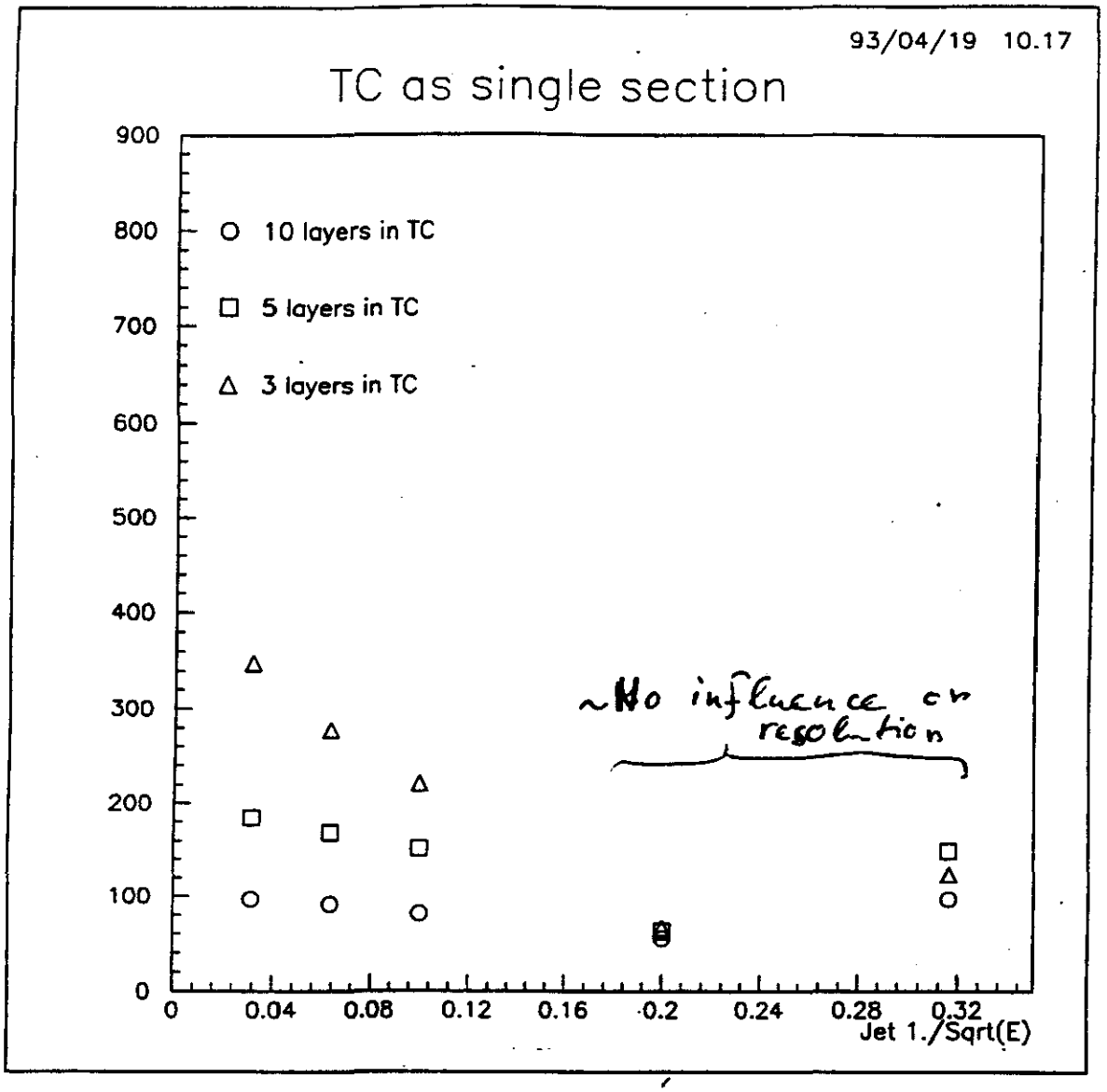

Figure 10: ***Weight for Scintillating Barell calorimeter***

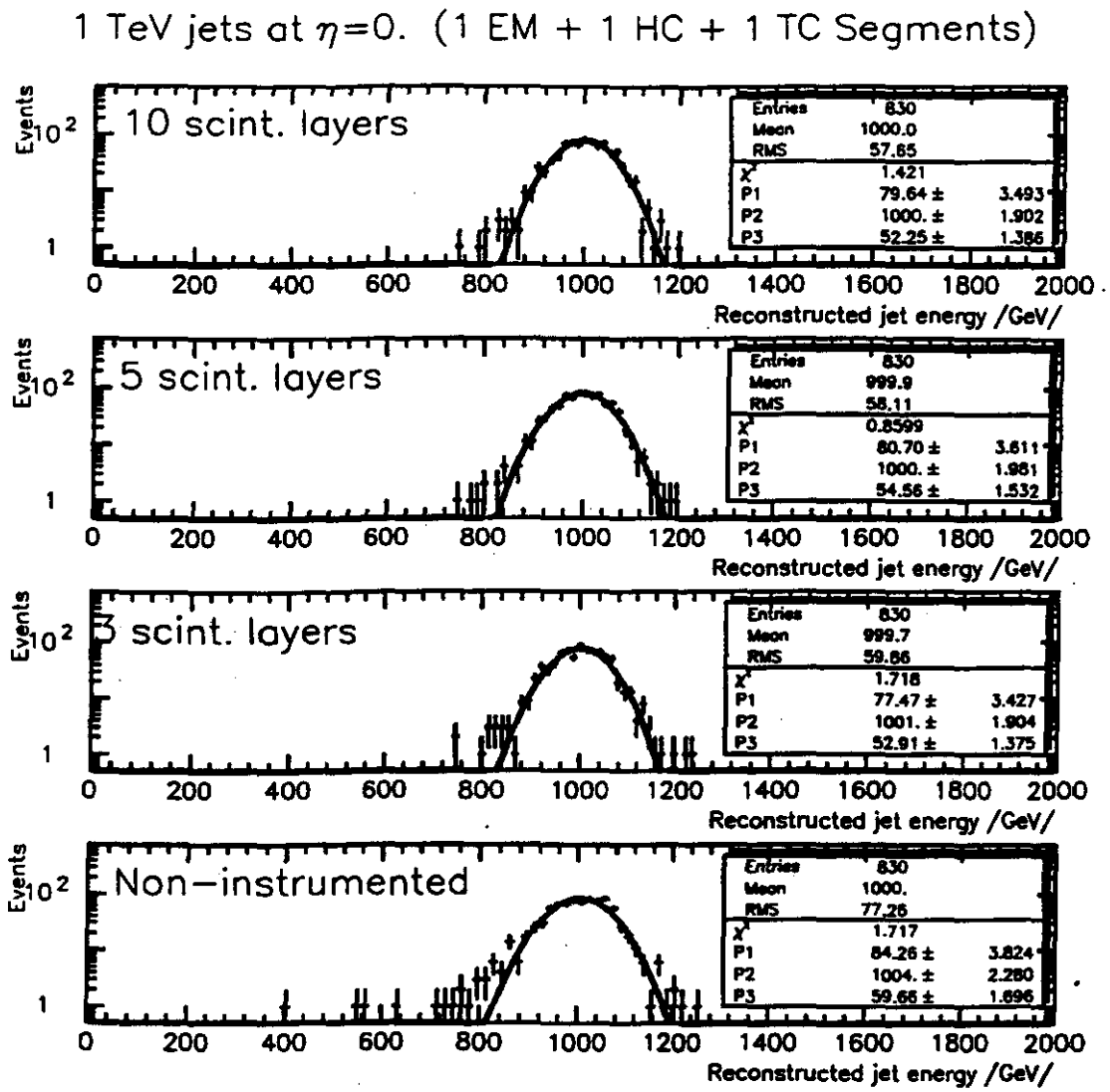

Figure 11: ***Response spectrum for 1 TeV jet (no segmentation in EM and HC)***

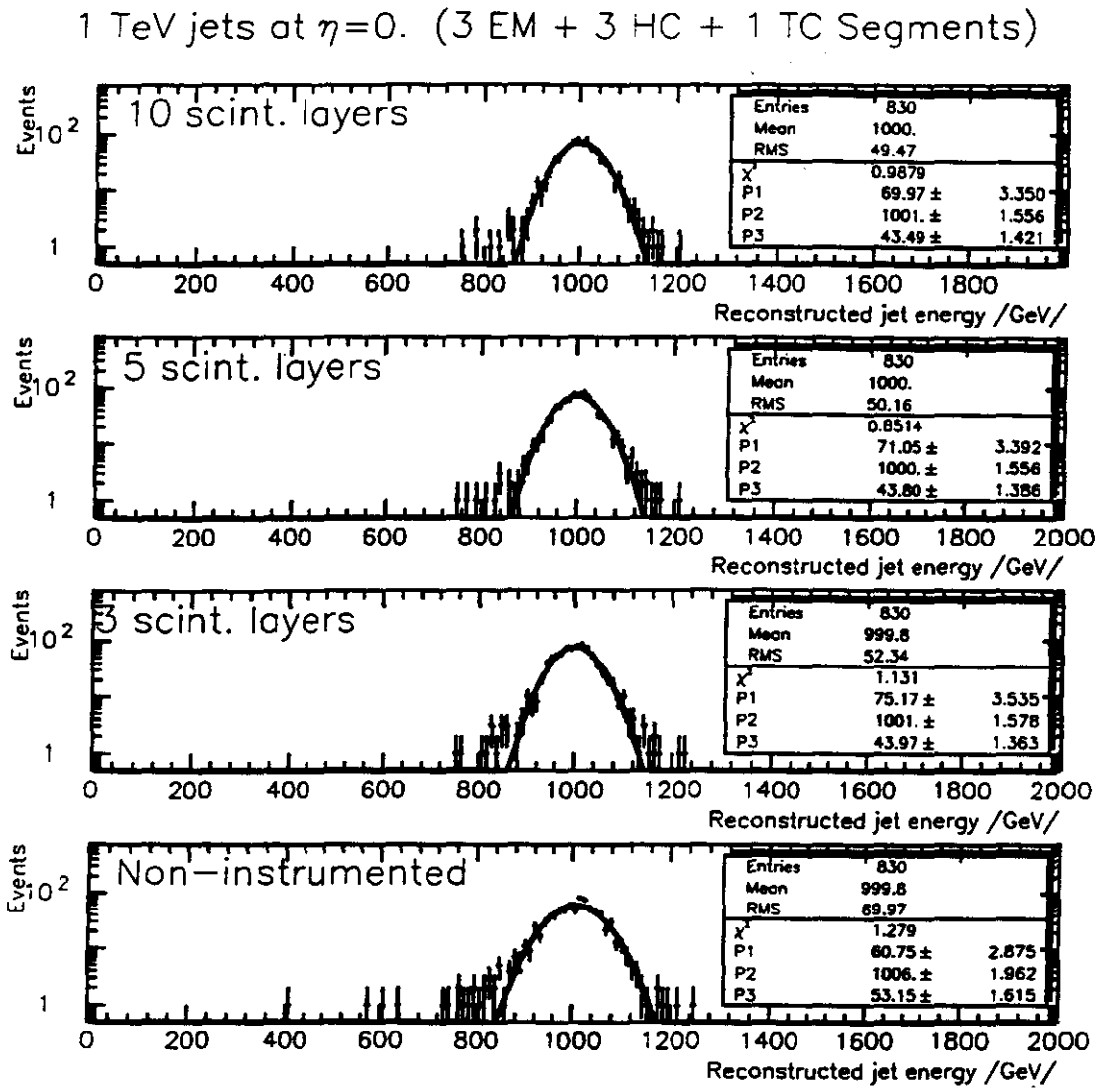

Figure 12: ***Response spectrum for 1 TeV jet (3 segments in EM and 3 in HC)***

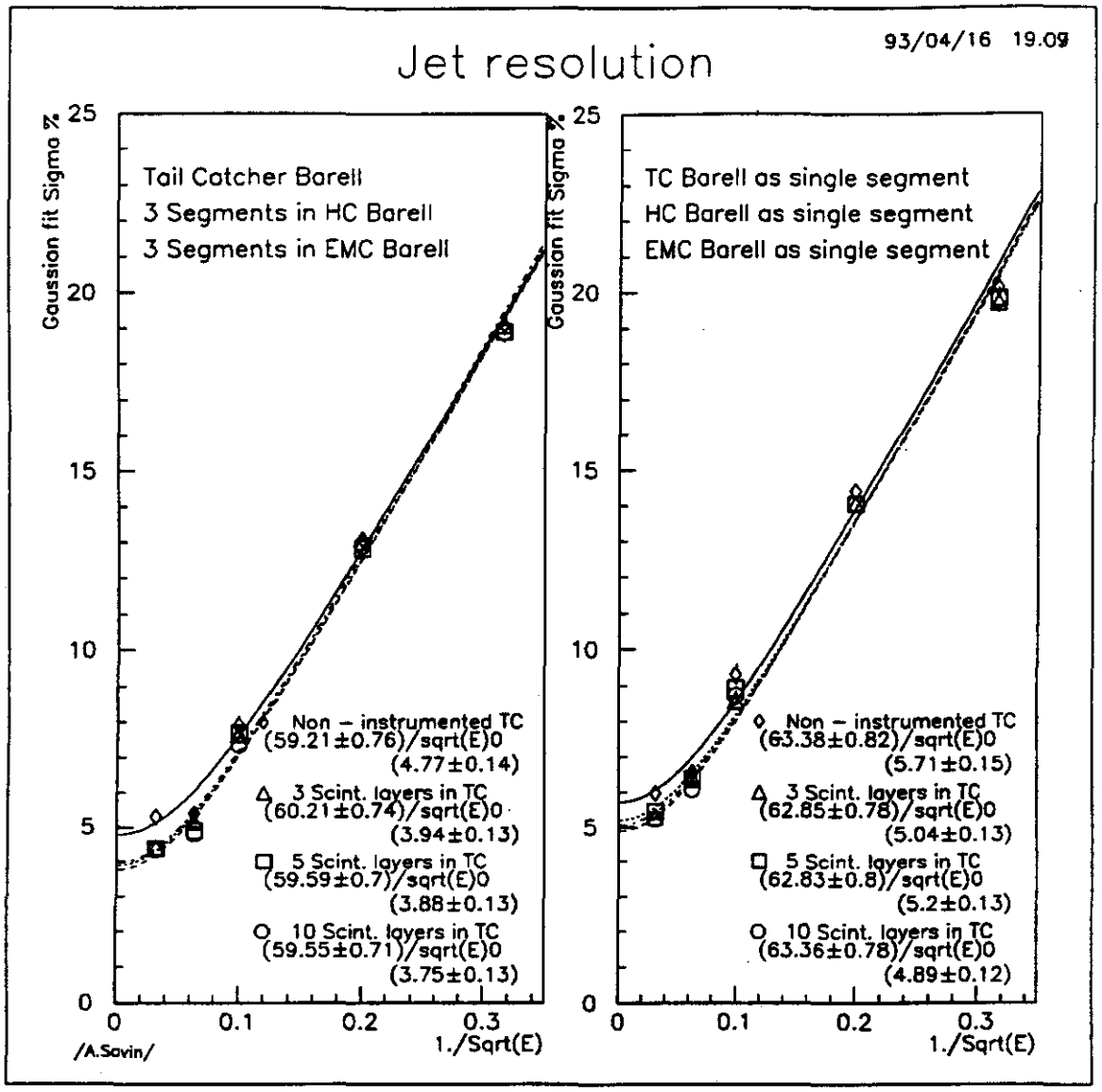

Figure 13: ***Parametrization of jet resolution***

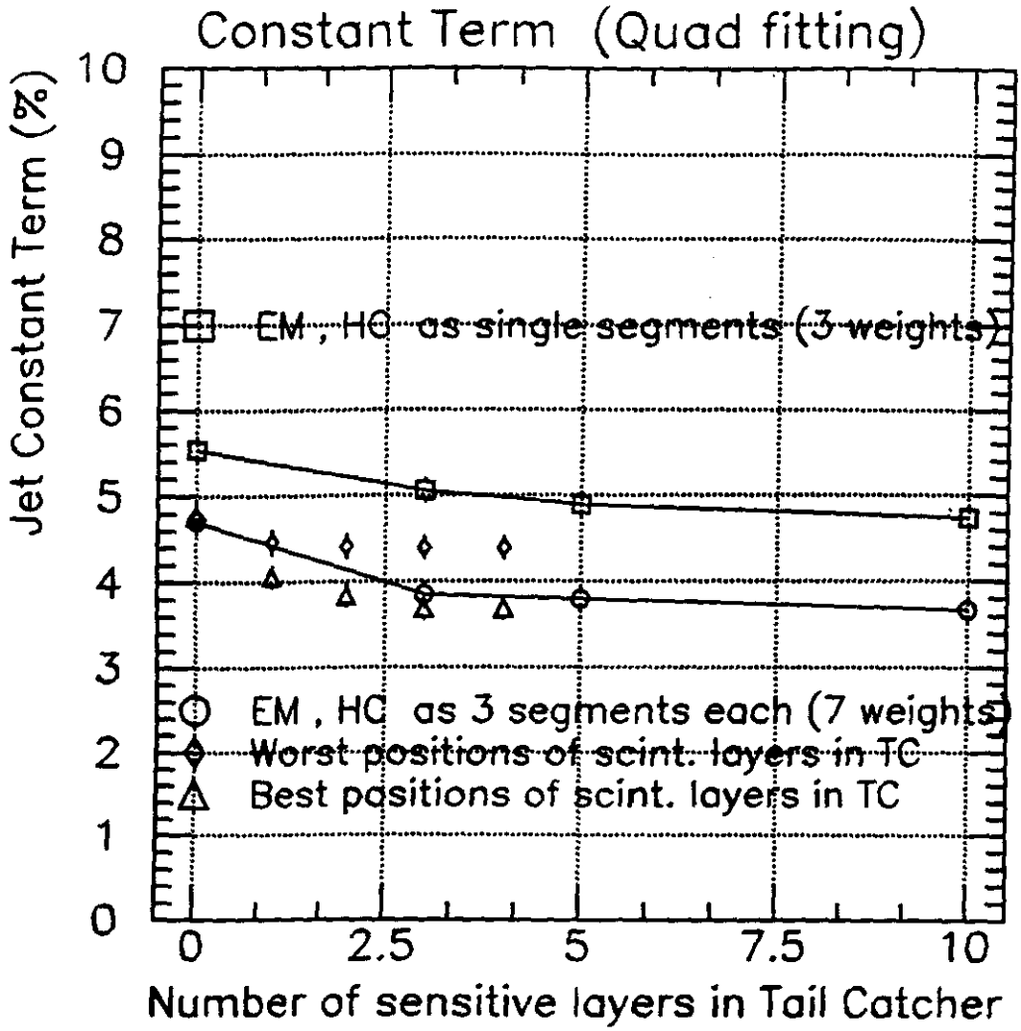

Figure 14: ***Constant term for different instrumentation of SB/TC***

Conclusion on jet detection

1. Instrumented SB improves constant term in jet resolution from 4.8% to 3.7 %

2. Longitudinal segmentation of EM and HC is as helpful in jet energy resolution as whole instrumented SB

3. 3-4 active layers in SB looks appropriate

gem

γeμ

Presentation by:

K. Shmakov
ITEP/ORNL

Missing E_T in Jets due to leakages into Scintillating Calorimeter

Konstantin Shmakov
ITEP/ORNL

June 7-8, 1993
ITEP

1 Parametrisation of the tails of hadronic showers in Scint.Calorimeter, GEANT

2 Standart Model missing E_T backgrounds
PYTHIA 5.6

3 Missing E_T due to SC (if non-instrumented)
$|\eta| < 1.28$, events + parametrization

4 Attemts to reduce Standart Model background. What is the impact on missing E_T from SC?

100 GeV π^-

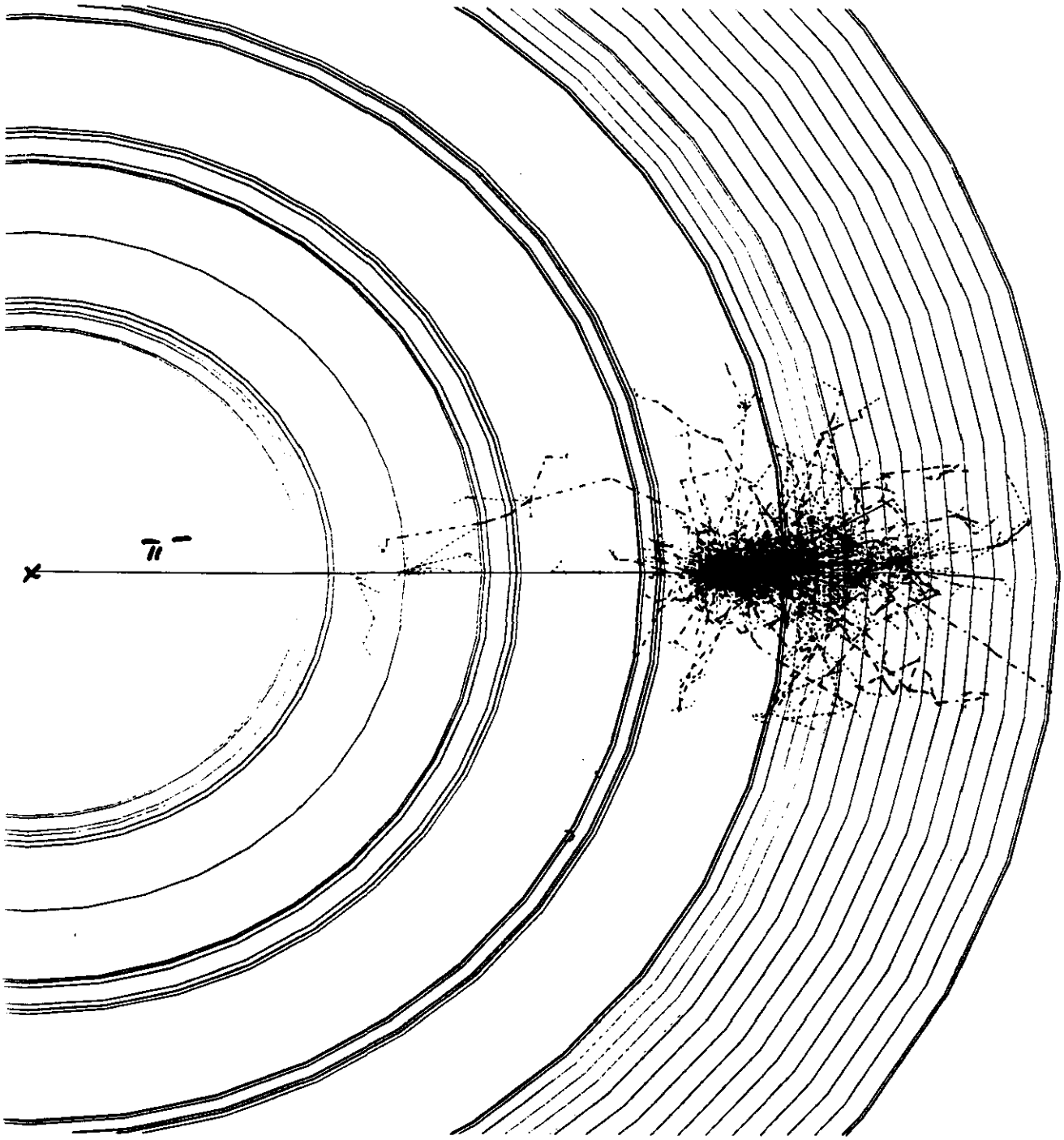

100 GeV π^-

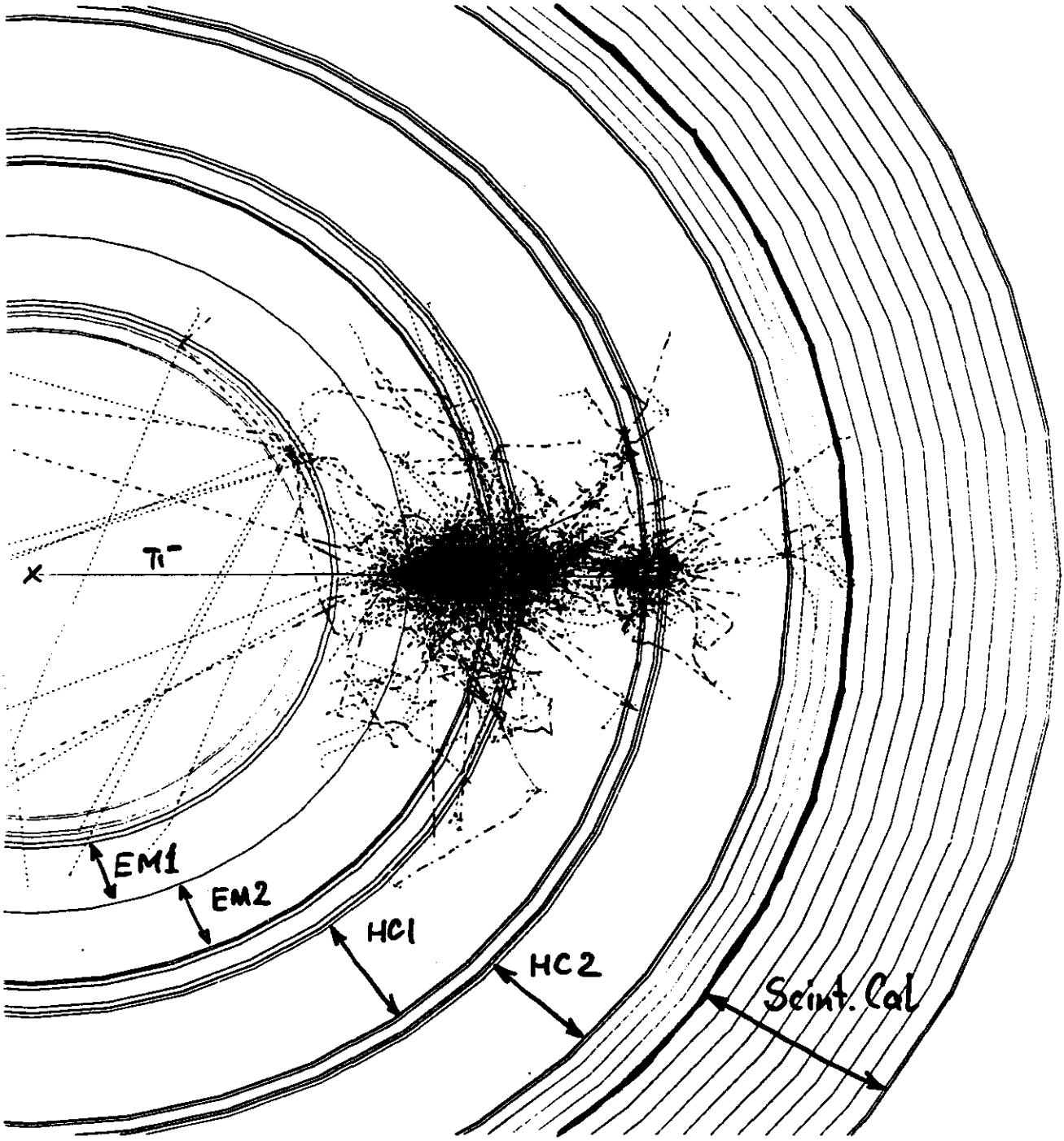

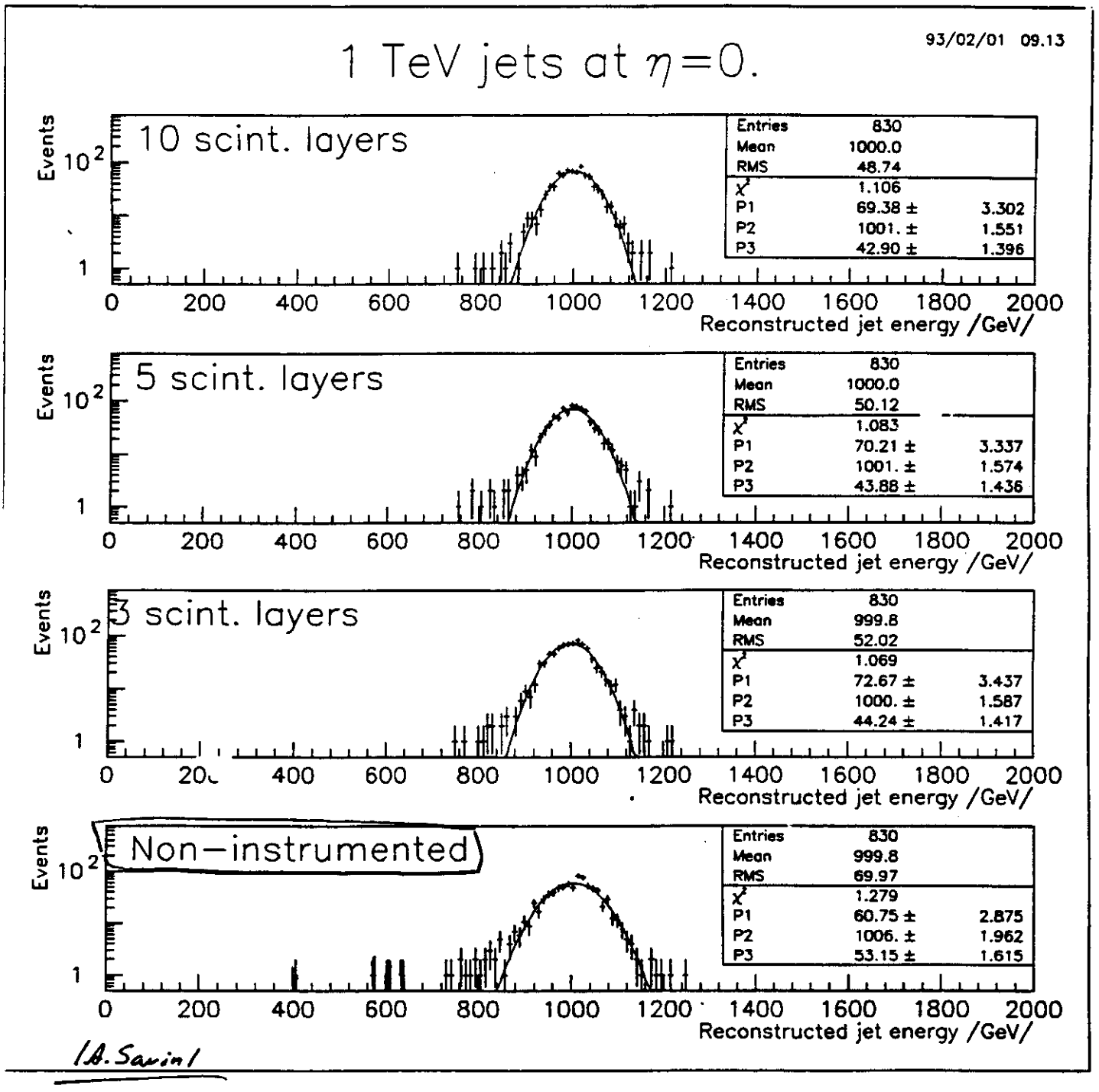
93/02/01 09.13
1 TeV jets at η=0.
10 scint. layers
Entries 830
Mean 1000.0
RMS 48.74
χ² 1.106
P1 69.38 ± 3.302
P2 1001. ± 1.551
P3 42.90 ± 1.396
5 scint. layers
Entries 830
Mean 1000.0
RMS 50.12
χ² 1.083
P1 70.21 ± 3.337
P2 1001. ± 1.574
P3 43.88 ± 1.436
3 scint. layers
Entries 830
Mean 999.8
RMS 52.02
χ² 1.069
P1 72.67 ± 3.437
P2 1000. ± 1.587
P3 44.24 ± 1.417
Non−instrumented
Entries 830
Mean 999.8
RMS 69.97
χ² 1.279
P1 60.75 ± 2.875
P2 1006. ± 1.962
P3 53.15 ± 1.615
Events
Reconstructed jet energy /GeV/
(A. Savin)

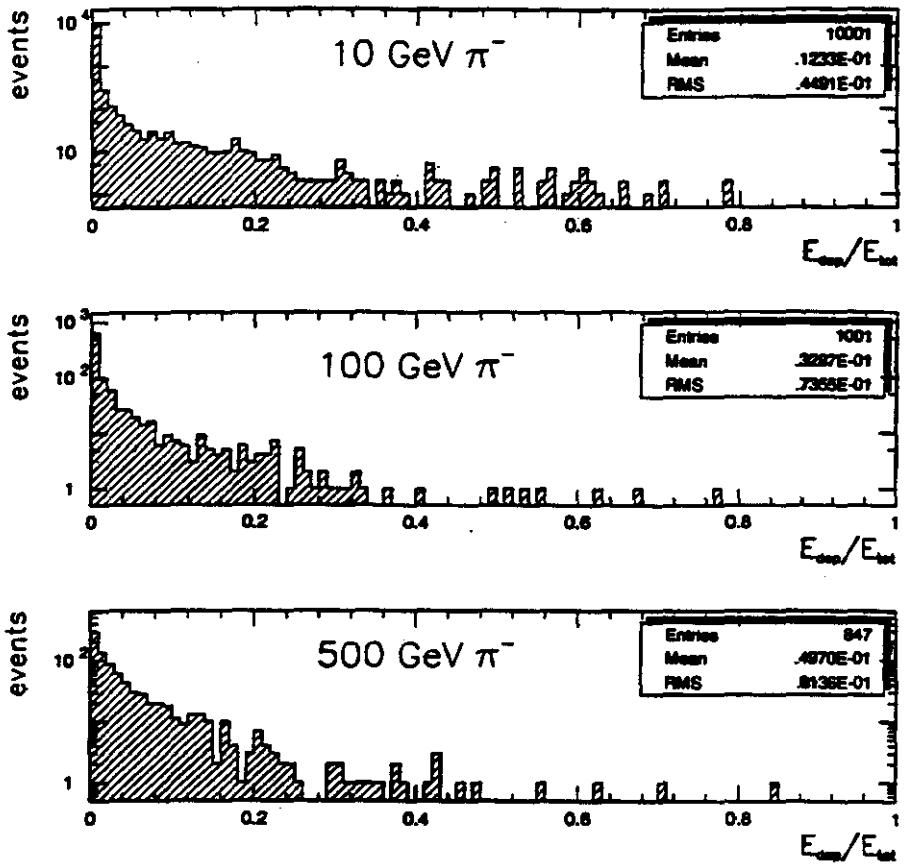

Spectrums of 10,100 and 500 GeV π^- in Scint.Cal. at 90°. The average energy deposition in Scint:Cal. is 1.2 % at 10 GeV 3.3 % at 100 GeV and 5.0 % at 500 GeV. One can see events with more than 300 GeV deposition in SC at 500 GeV.

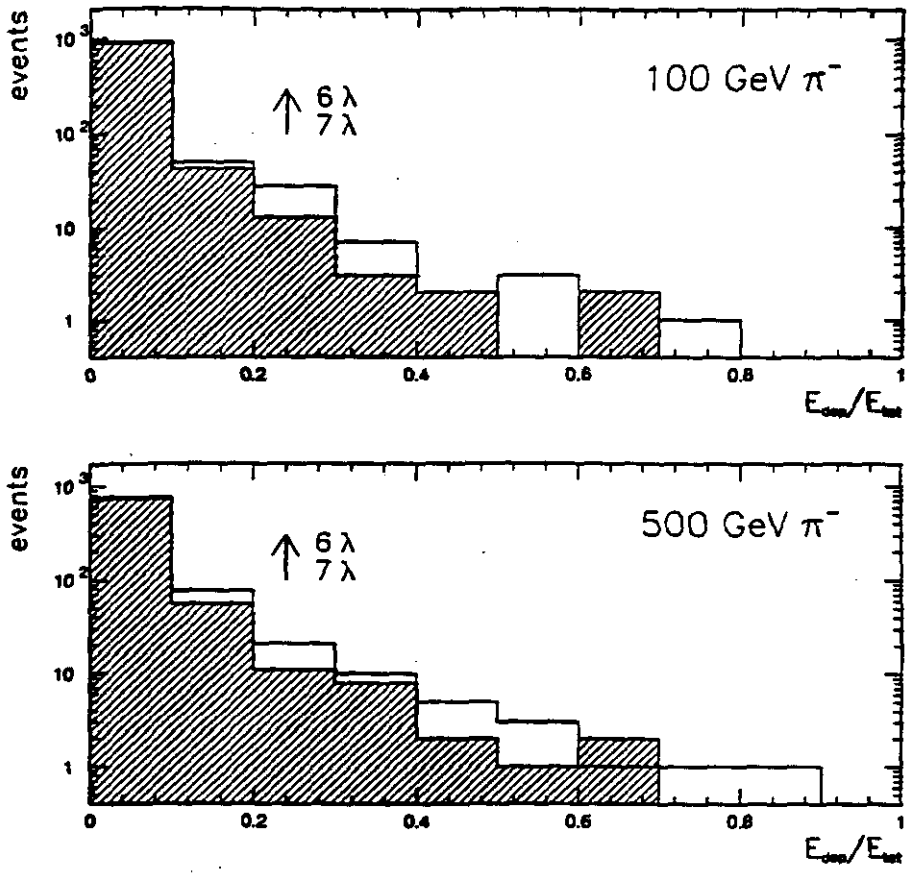

Spectrums of 100 and 500 GeV hadrons in Scint.Cal. after 6 and 7 λ. One can see that ratio factor of about 2 exists for events in a tail – close to the expected law $\exp -x/\lambda$.

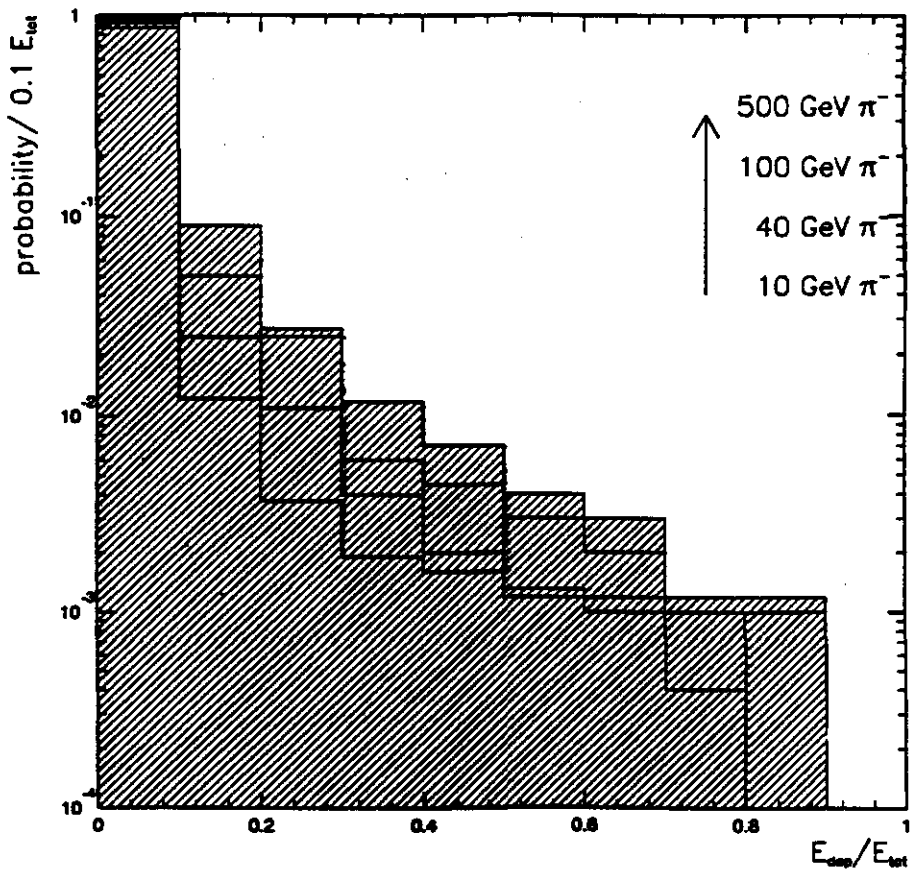

Parameterization of the hadron energy deposition in Scint.Cal. at 90° (6 λ). Probability is plotted for the $0.1E_{tot}$ bin as a function of the ratio E_{dep}/E_{tot} - fraction of the total energy deposited in Scint.Cal., (0.-1.)E_{tot} scale. One can see that all histograms looks similar and differs only by factor 2-3 in a tail.

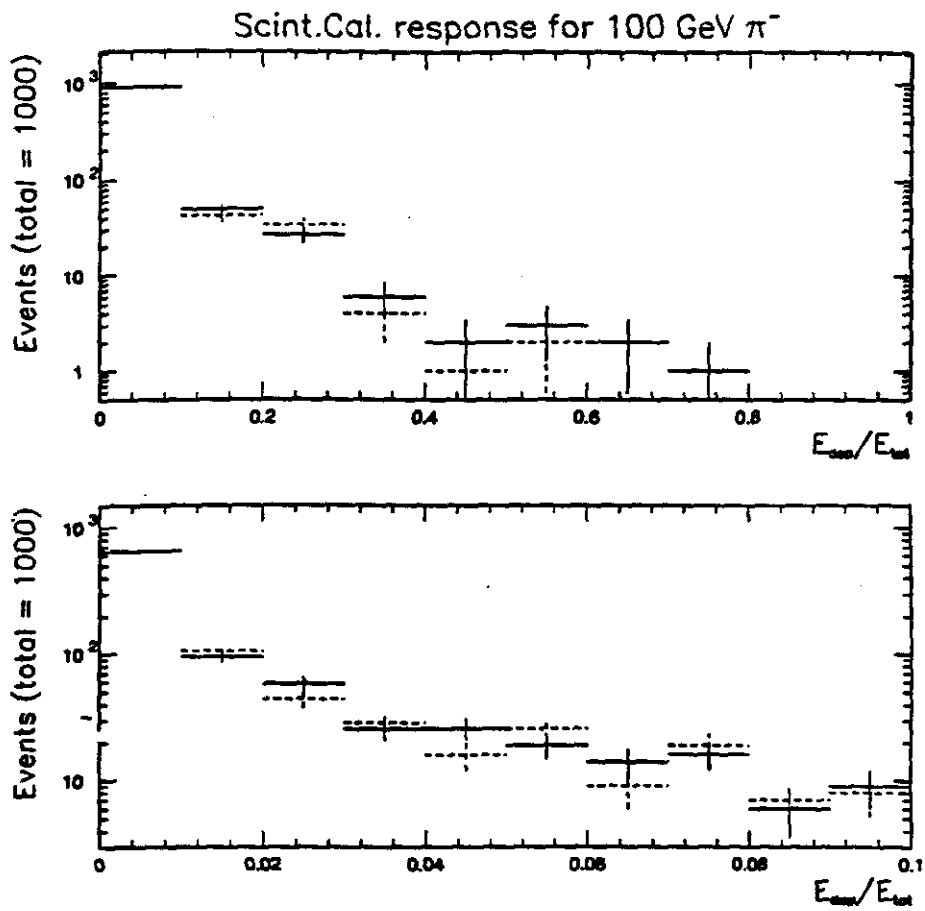

Parameterization versus GEANT full Monte-Carlo for 100 GeV π^- in two scales a) 0.-1. E_{tot}, b) 0.0-0.1 E_{tot}. Solid points - GEANT3.15, dashed points - parameterization. Total number of events - 1000.

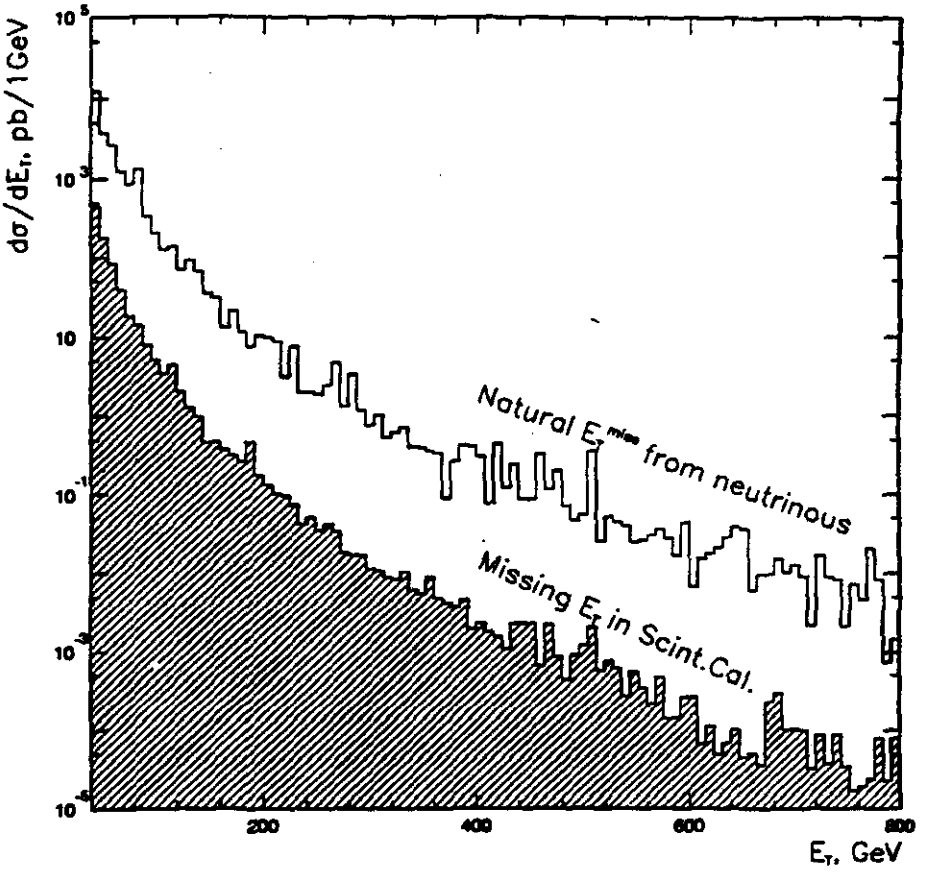

Natural E_T^{miss} spectrum from neutrinous (Standard Model Background) and E_T^{miss} spectrum originated in Scint.Cal. in case of no measurements there. This plots were generated as a sum of 12 distributions of 100,000 PYTHIA events with different p_T^q with corresponding cross-sections.

Conclusion

1. $\not{E}_T$ due to non-instumented Scint. Cal. ($|\eta| < 1.28$) is factor <u>20 less</u> than the Standard Model background.

2. Though if GEANT is not correct for high energy dep. in a tail? Factor 2 can be.

3. Attempts to reduce SM background can give factor > 2.

4. Factor ~10 is not safe enough to conclude that SC is not needed to be instrumented.

Is GEANT correct ?

H1 Test Beam

NIM (A290, 1990, p469)

GEANT vs DATA

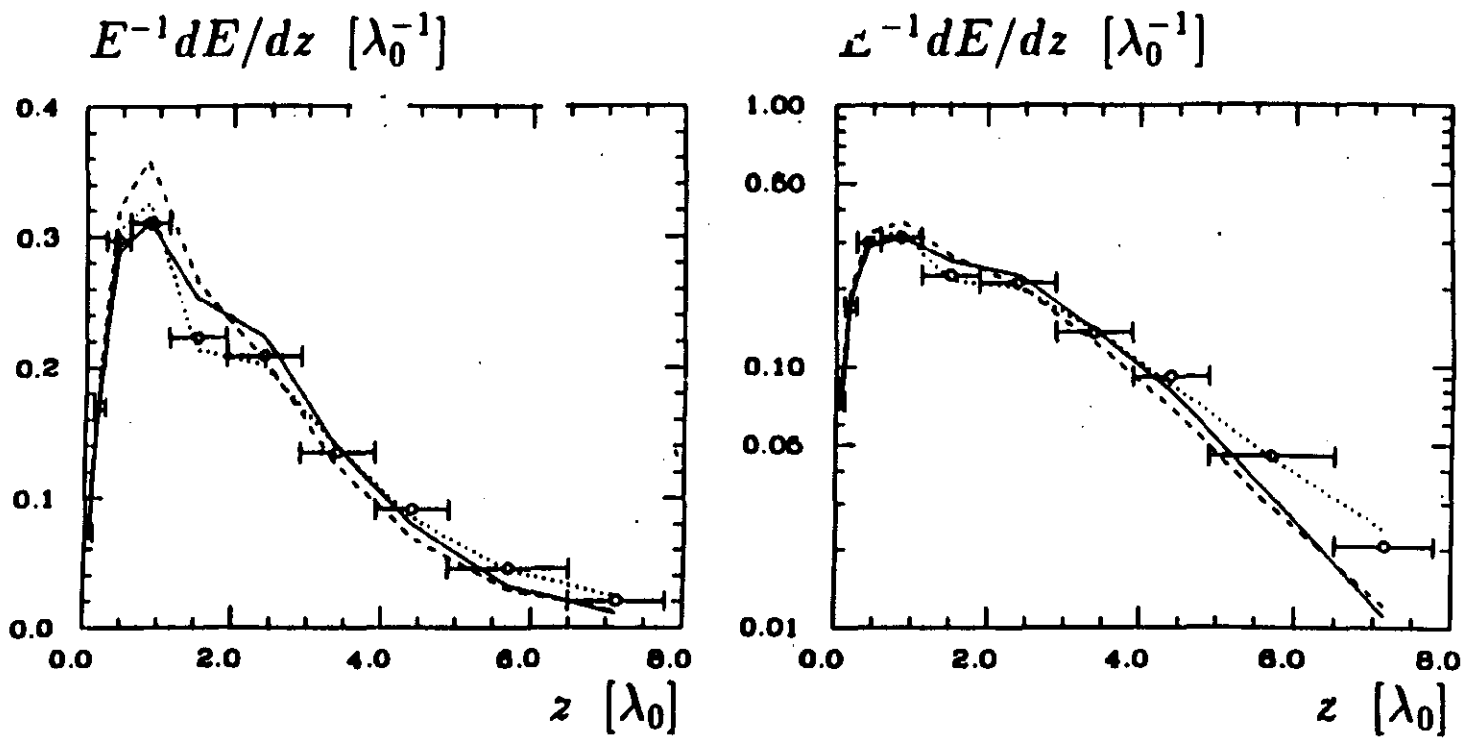

Fig. 9. Mean longitudinal energy profile for 30 GeV π^- showers: experiment (o), GFLASH (·····), GEANT311 (— — —), and GHEISHA8 (———).

H1 Test Beam

(From NIM A290, 1990, p469)

GEANT vs DATA in TailCatcher

TC – After ≈ 5. λ

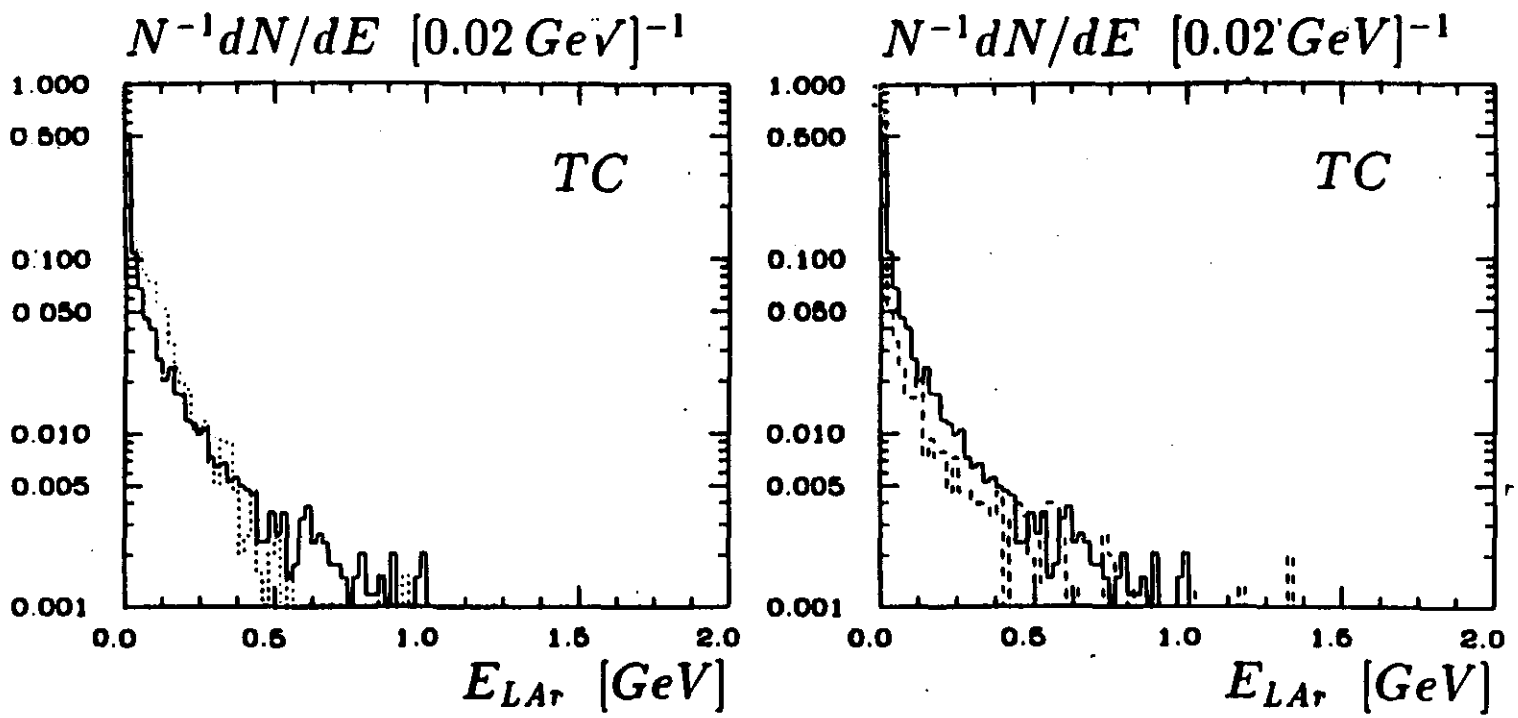

Fig. 15. Energy distributions in the modules EC, HC, and TC for 30 GeV π^- showers: experiment (———), GFLASH (·····), and GEANT (— — —).

gem

γeμ

Presentation by:

Yu. Kamyshkov
(for Efremenko)
ITEP/ORNL

Muons in the calorimeter.

Y.Efremenko
ITEP/ORNL

1. Muon Pt.
2. Muon energy loss correction in calorimeter
3. Noise in calorimeter.
4. Instrumentation of SBC
5. Endcap region.
6. Conclusion

As was shown before (GEM-TN-269, 349) for muon with Pt higher,then 100 GeV the calorimeter influence on the muon resolution is negligible.

At the same time, muons with the low Pt (10-40 GeV) are very important for the Higgs detection.

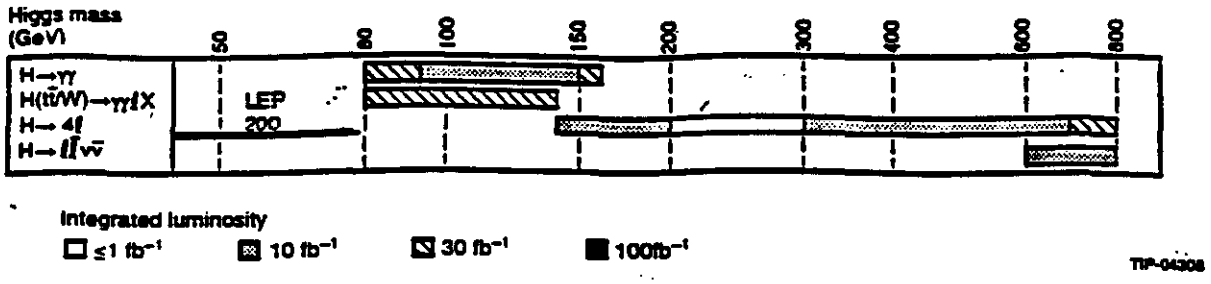

The more difficult for detection Higgs in 4μ is the Higgs with the mass 140 - 185 GeV where the Z0 mass constrain doesn't work.

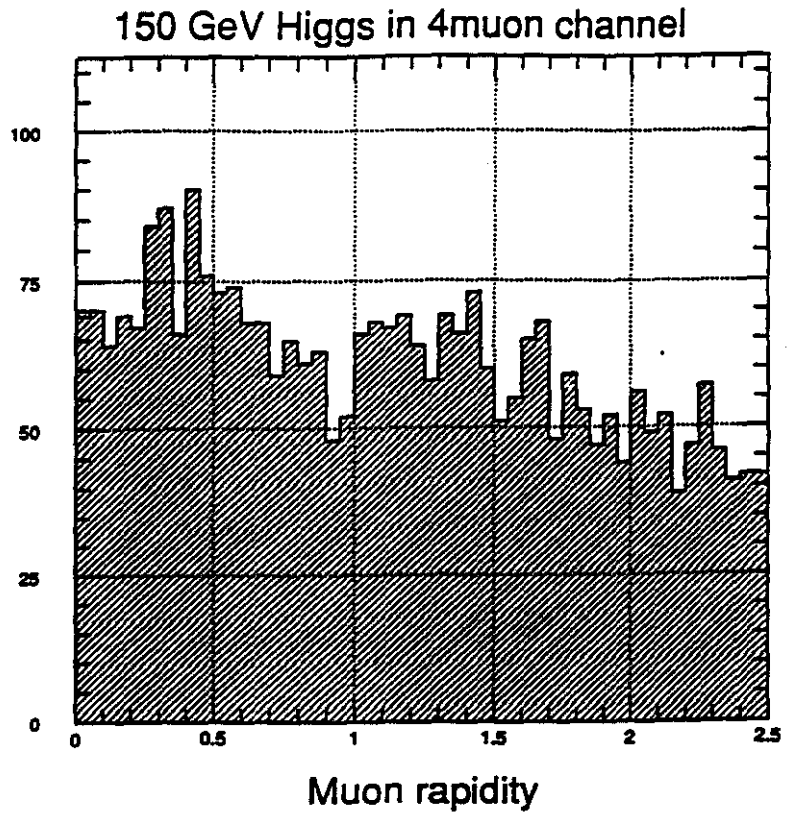
150 GeV Higgs in 4muon channel
100
75
50
25
0
0
0.5
1
1.5
2
2.5
Muon rapidity

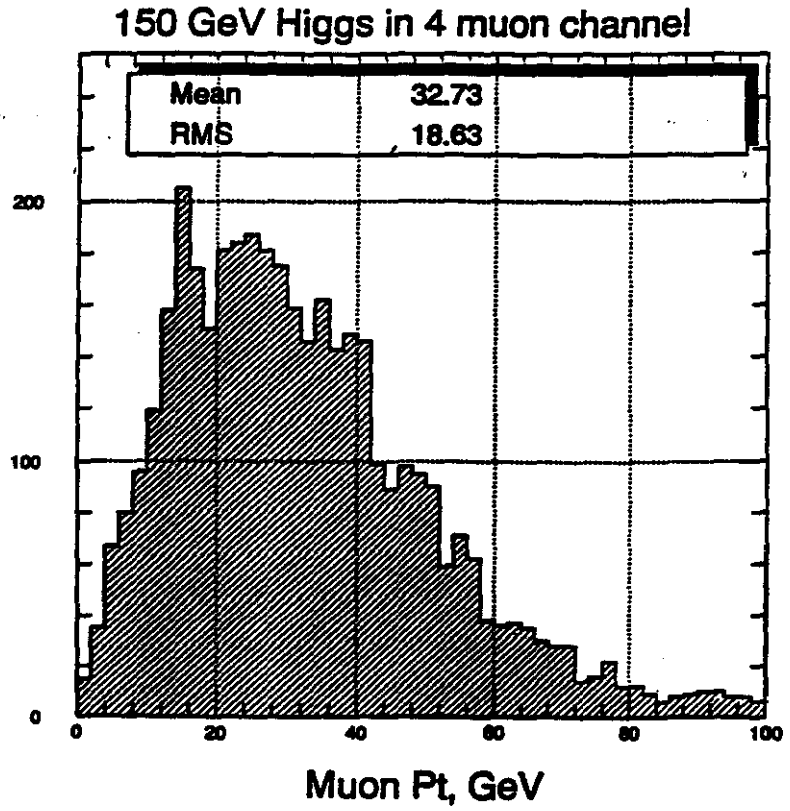
150 GeV Higgs in 4 muon channel
Mean 32.73
RMS 18.63
200
100
0
0
20
40
60
80
100
Muon Pt, GeV

Geant simulation.

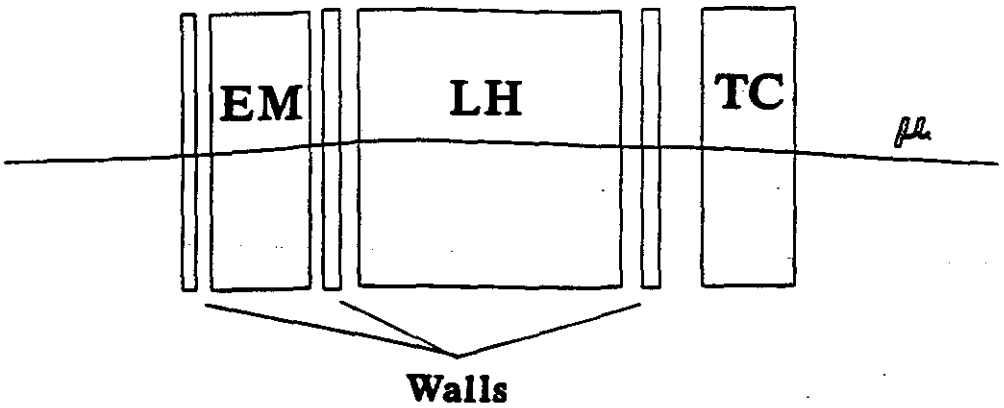

Muons Pt 10, 20, 50, 100, 500 GeV

Rapidity region near 0.0 and 0.9

One point for endcap Pt 20 GeV η 2.0

$$\Delta E_\mu = E_\mu^0 - (P_\mu + k_1 E_{EM} + K_2 E_H + K_3 E_{TC} + C)$$

Contribution from calorimeter only if $\delta P_\mu / P_\mu = 0$

Muons in the Tail Catcher

$\Delta P_\mu / P_\mu = 0.$

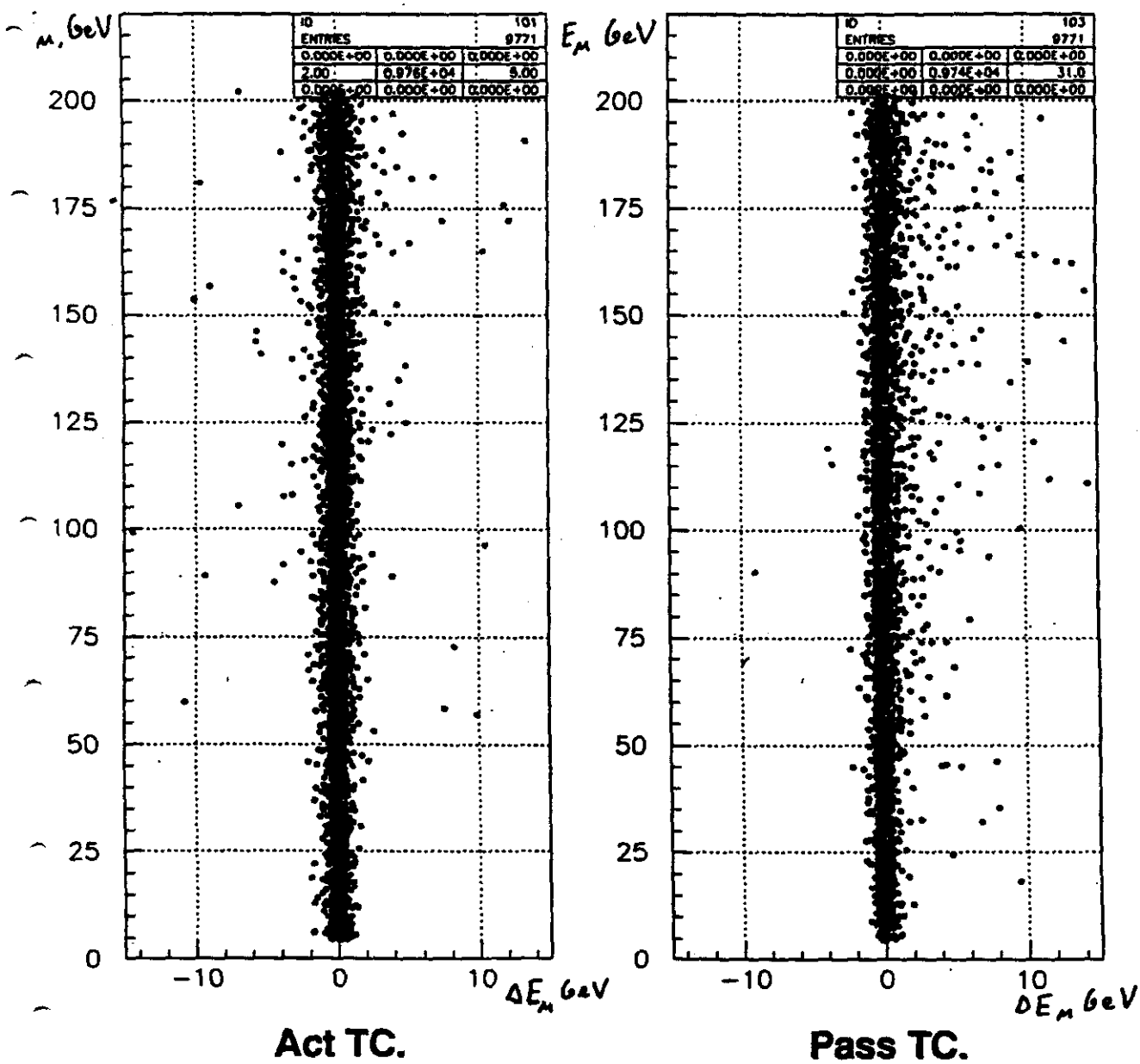

Act TC. **Pass TC.**

Muons in the Tail Catcher

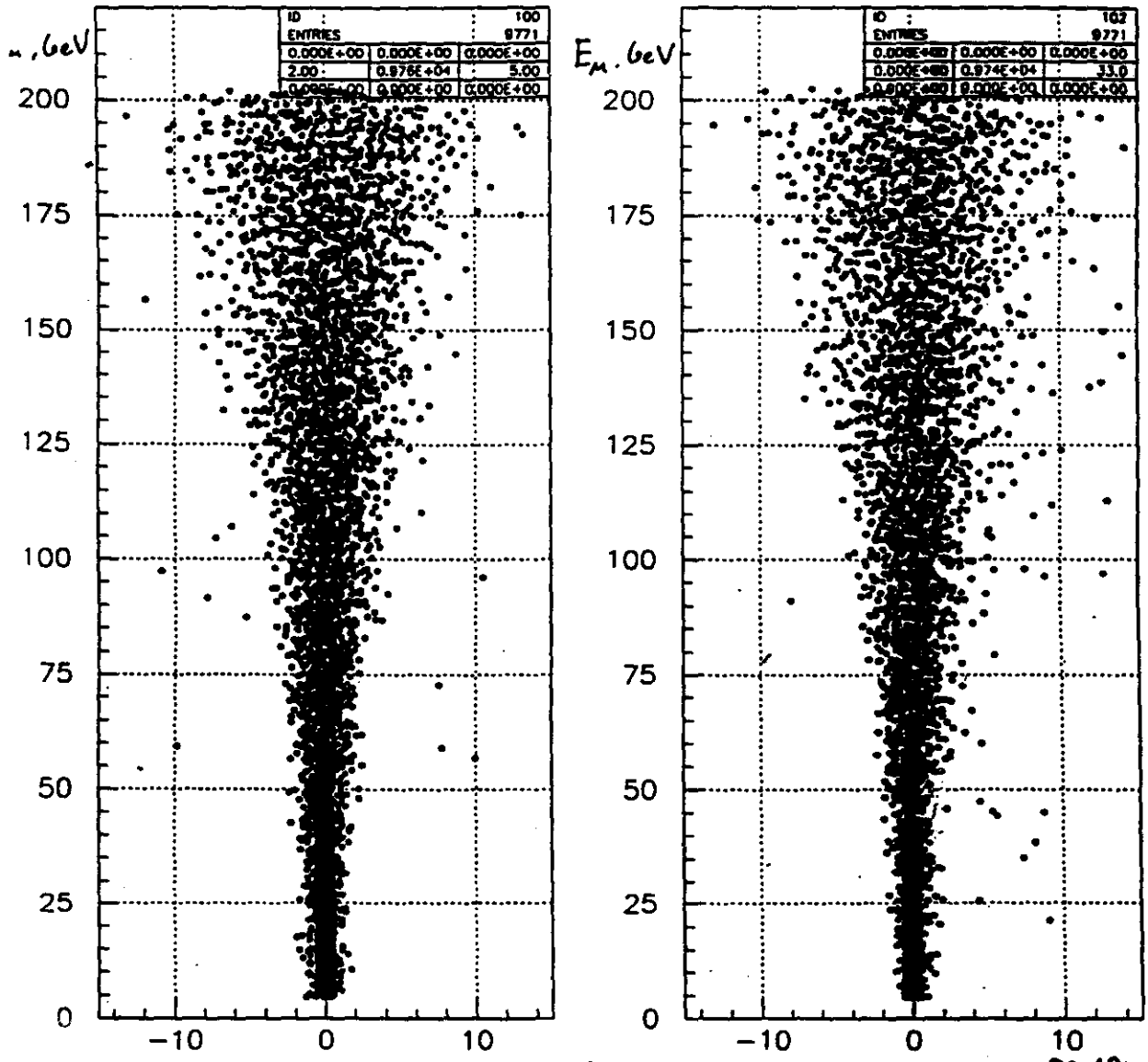

99.5% < 3σ μ res

Act TC. $50 < E_\mu < 200$ GeV

99.1% < 3σ μ res.

Pass TC. $50 < E_\mu < 200$ GeV

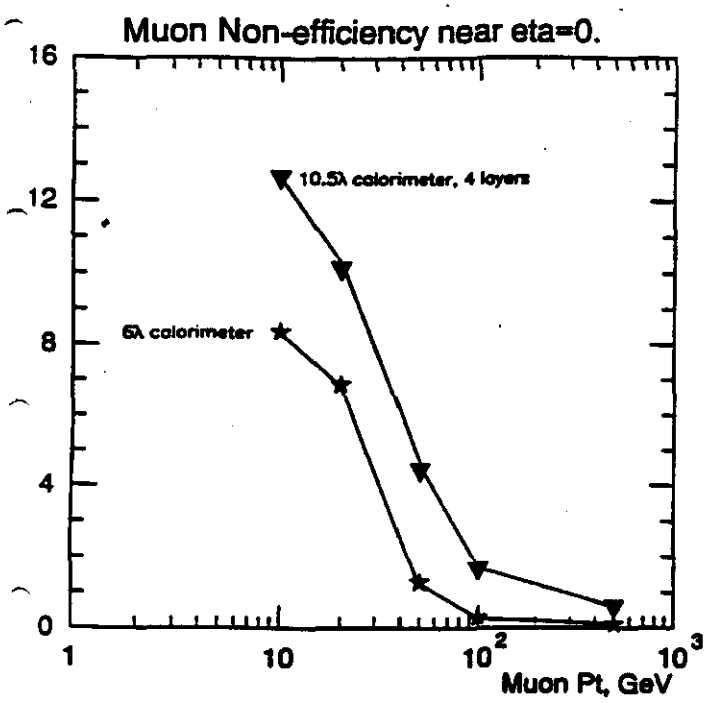
Muon Non-efficiency near eta=0.
10.5λ calorimeter, 4 layers
6λ calorimeter
Muon Pt, GeV

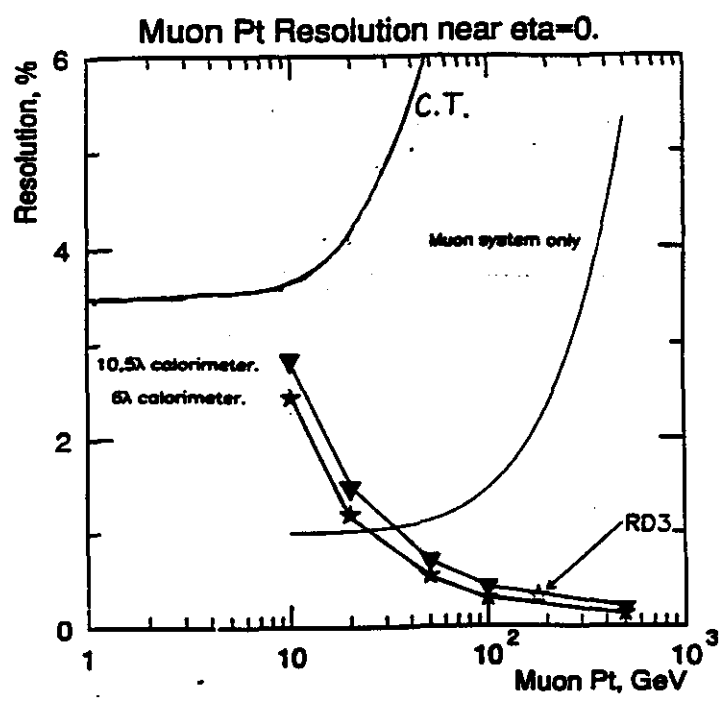
Muon Pt Resolution near eta=0.
Resolution, %
C.T.
Muon system only
10.5λ calorimeter.
6λ calorimeter.
RD3
Muon Pt, GeV

Muon energy loss correction in calorimeter.

1. Using calorimeter information
2. Using the most probable value

→ Combination.

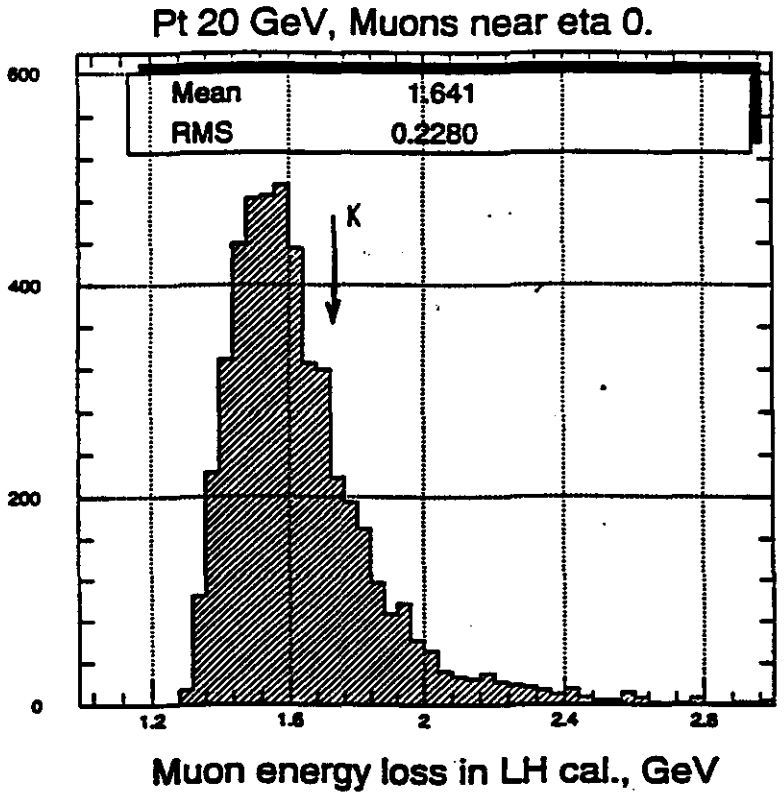

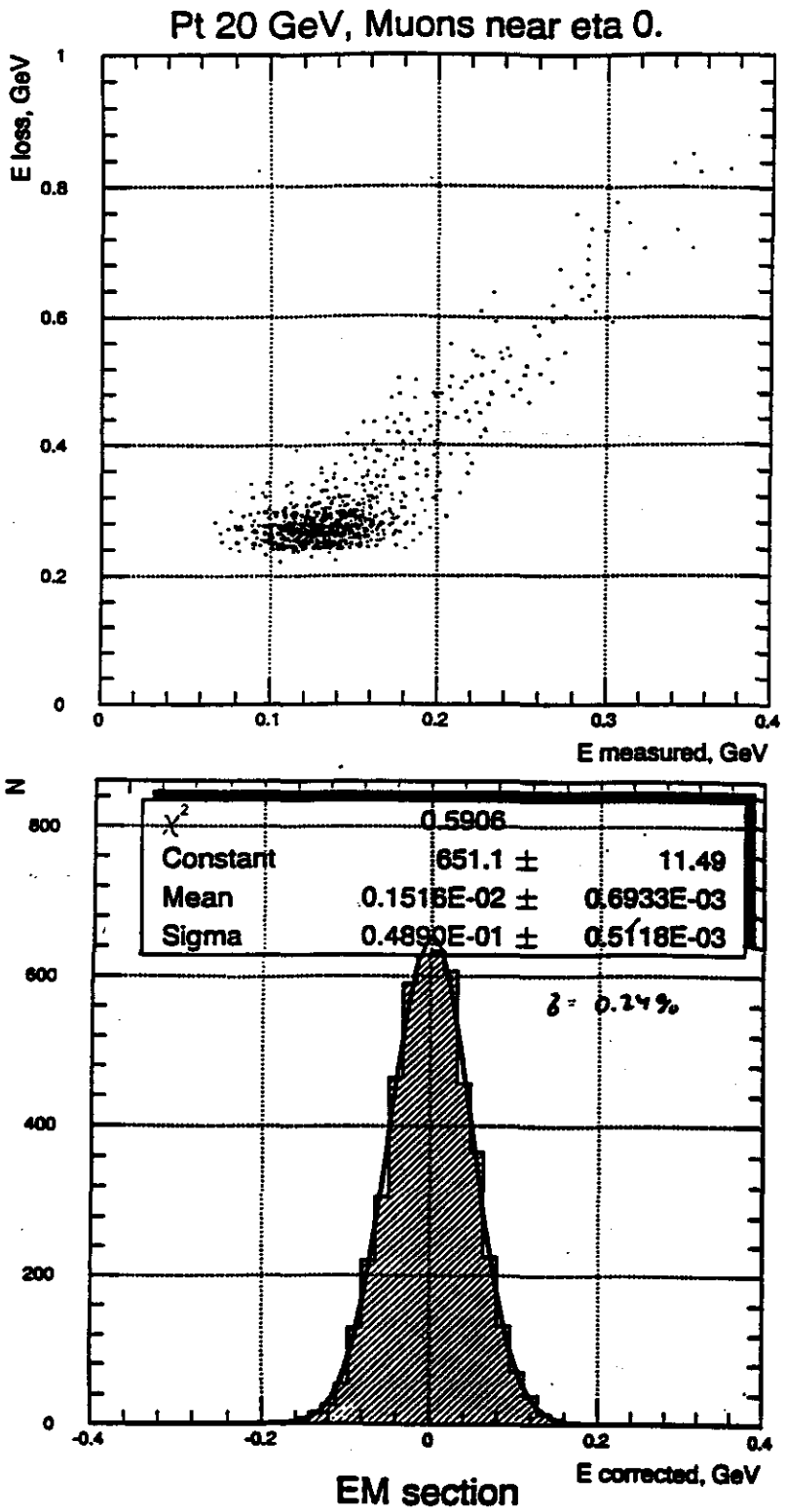
Pt 20 GeV, Muons near eta 0.
E loss, GeV
E measured, GeV
N
χ^2 0.5906
Constant 651.1 ± 11.49
Mean 0.1516E-02 ± 0.6933E-03
Sigma 0.4890E-01 ± 0.5118E-03
σ = 0.24%
E corrected, GeV
EM section

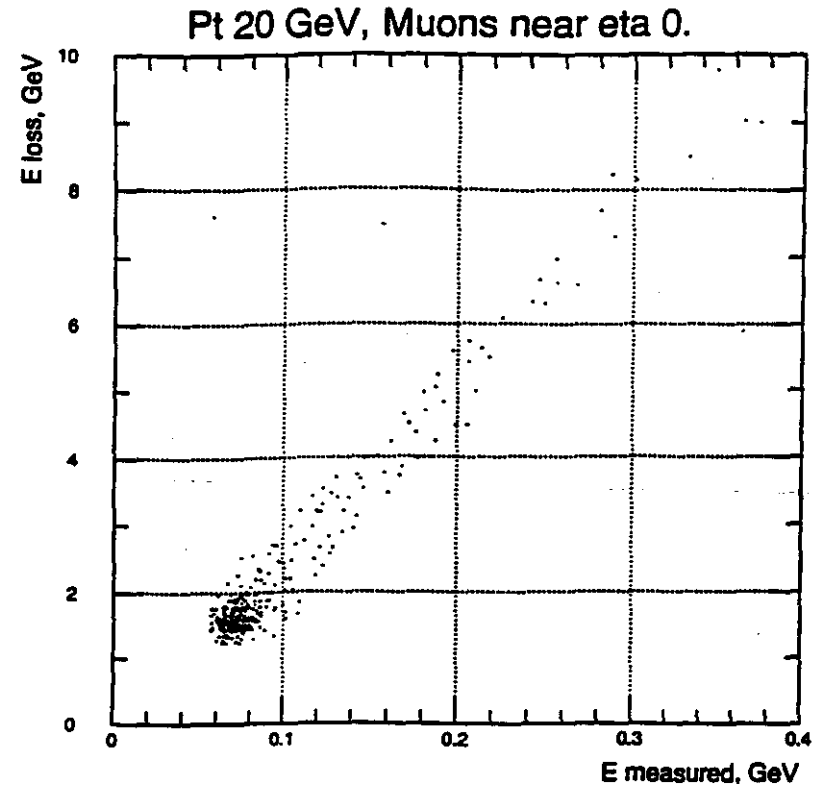
Pt 20 GeV, Muons near eta 0.
E loss, GeV
E measured, GeV

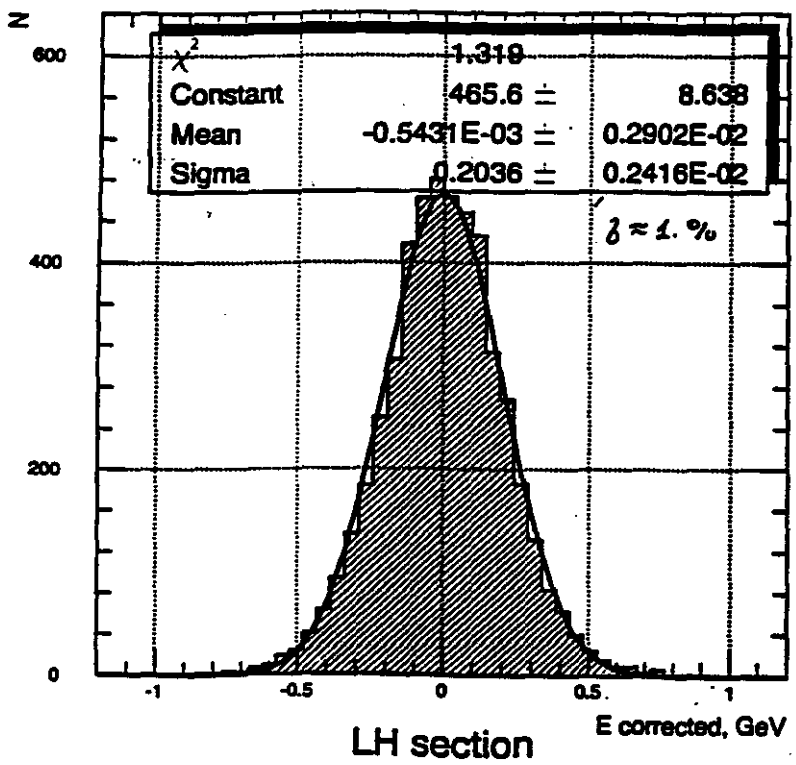
N
χ^2 1.319
Constant 465.6 ± 8.638
Mean -0.5431E-03 ± 0.2902E-02
Sigma 0.2036 ± 0.2416E-02
$\delta \approx 1.\%$
E corrected, GeV
LH section

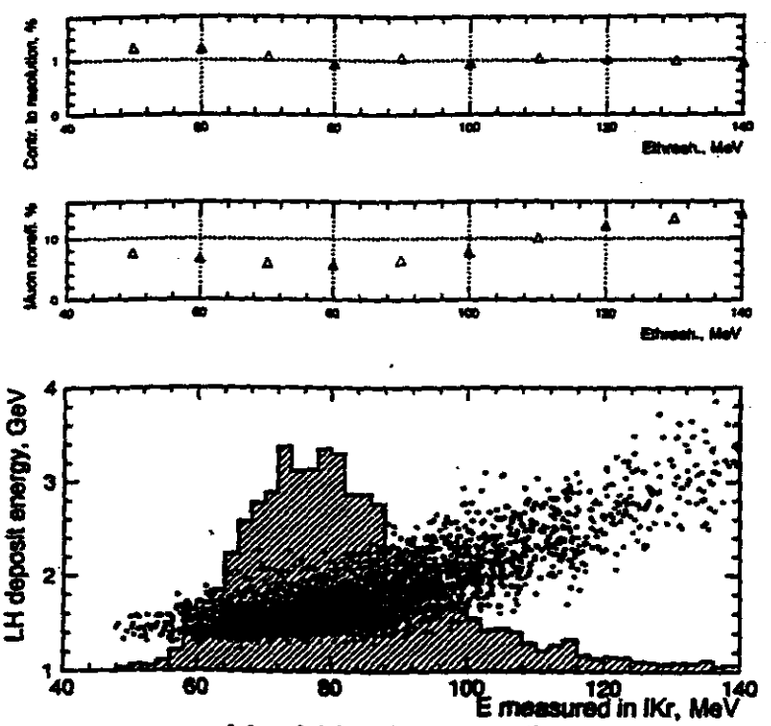

Liquid hadron section

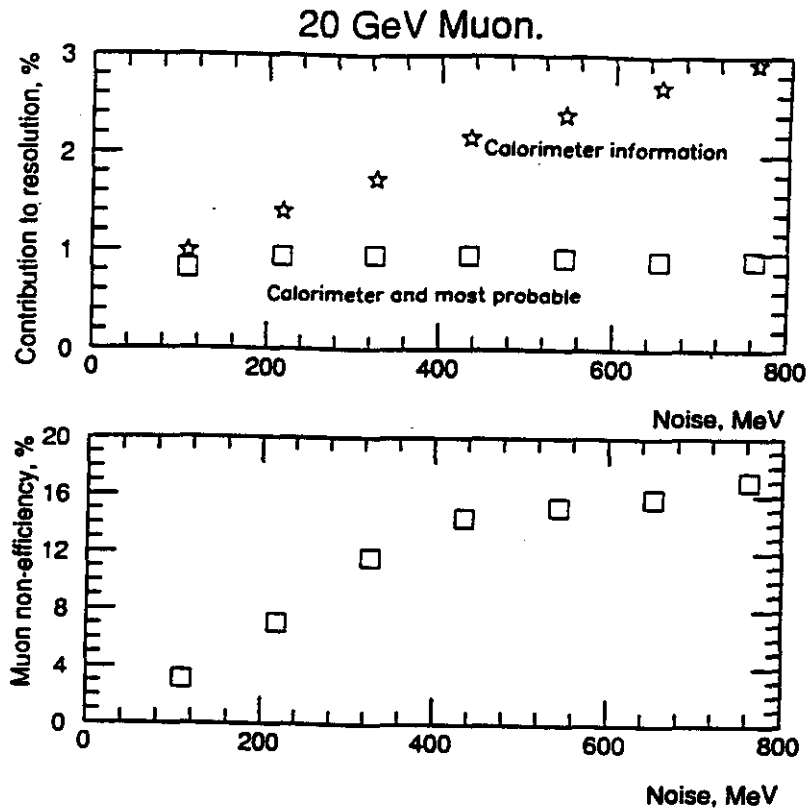

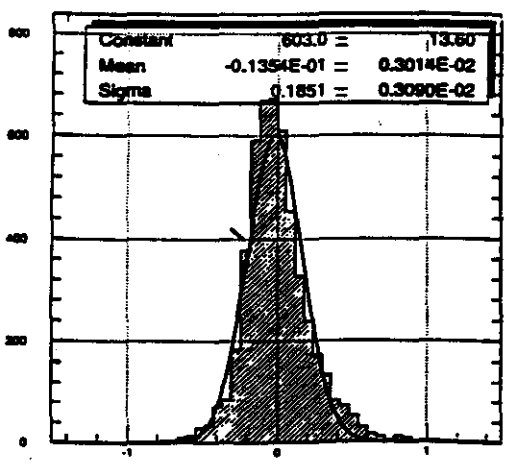

Loss correction in 6 liquid section

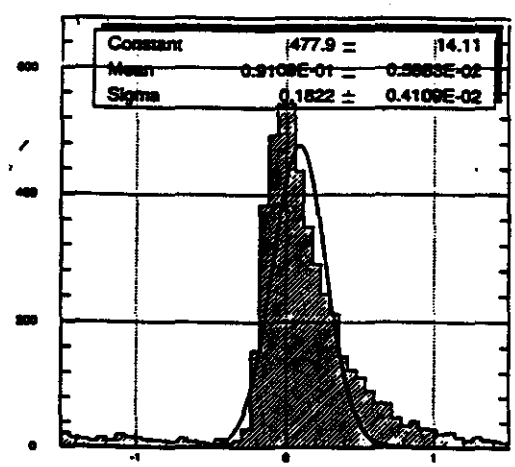

Loss correction in 6 liquid section

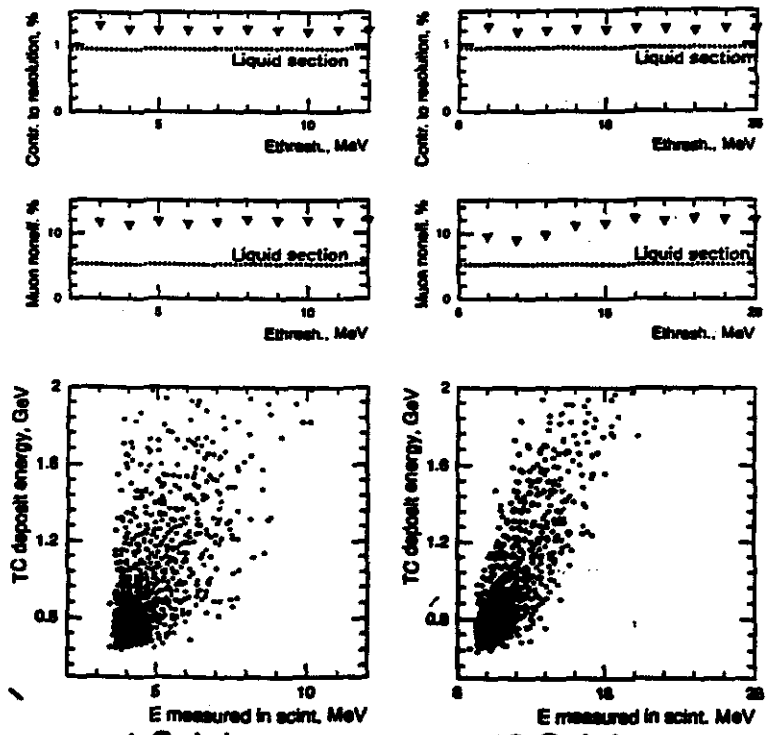

4 Sci. layers 10 Sci. Layers

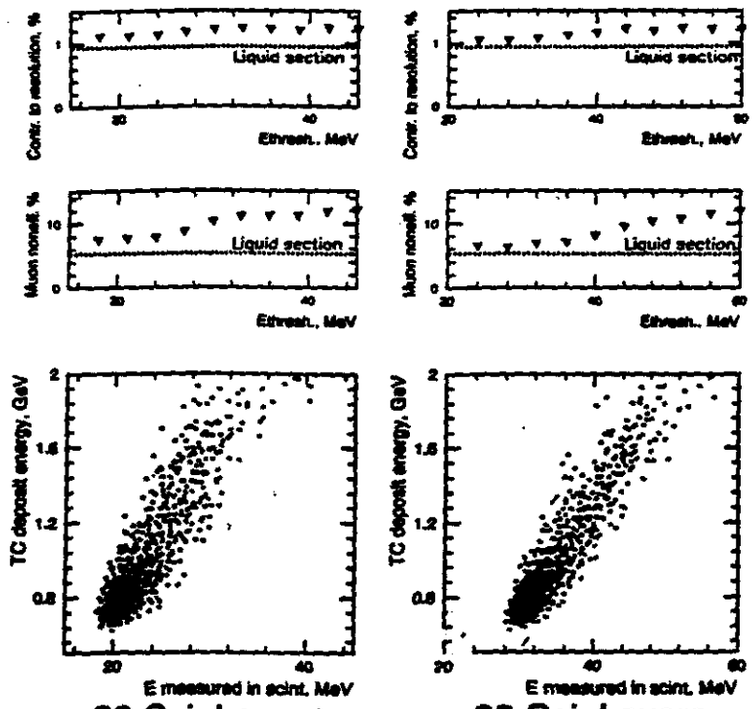

20 Sci. Layers 30 Sci. Layers

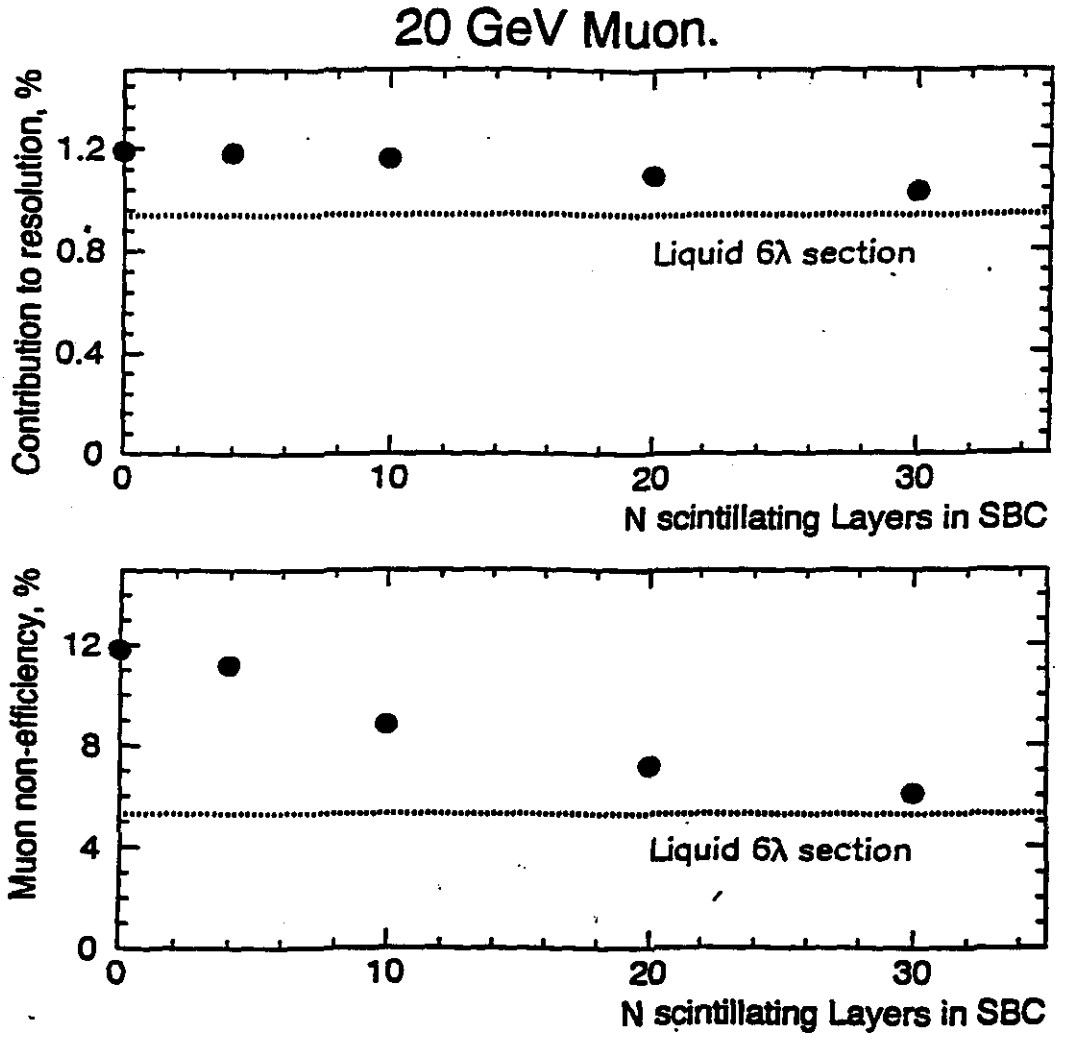
20 GeV Muon.
Contribution to resolution, %
1.2
0.8
0.4
0
Liquid 6λ section
0
10
20
30
N scintillating Layers in SBC
Muon non-efficiency, %
12
8
4
0
Liquid 6λ section
0
10
20
30
N scintillating Layers in SBC

CONCLUSION

1. Barrel calorimeter is strongly affect on the resolution of muons with Pt less than 30 GeV.

2. Influence of the Endcap calorimeter on the muon is low.

3. Increasing of the pileup noise at the high luminosity will strongly affect on the efficiency or resolution of the low Pt muons.

4. For the low momenta muon there is almost no difference how many sensitive layers (from zero to ten) are in SBC.

   The real improvement will appear if SBC would have more than 25 sensitive layers.

gem

γeμ

Presentation by:

N. Akchurin
Iowa University

Photomultiplier Tube (PMT) Requirements:

- Operation with good gain (10^5) in high magnetic ($\sim 1\,T$) field,
- High quantum efficiency,
- Green-extended response,
- Low dark current,
- Suitable physical dimensions,
- Current linearity $\lesssim 1\,A$
-

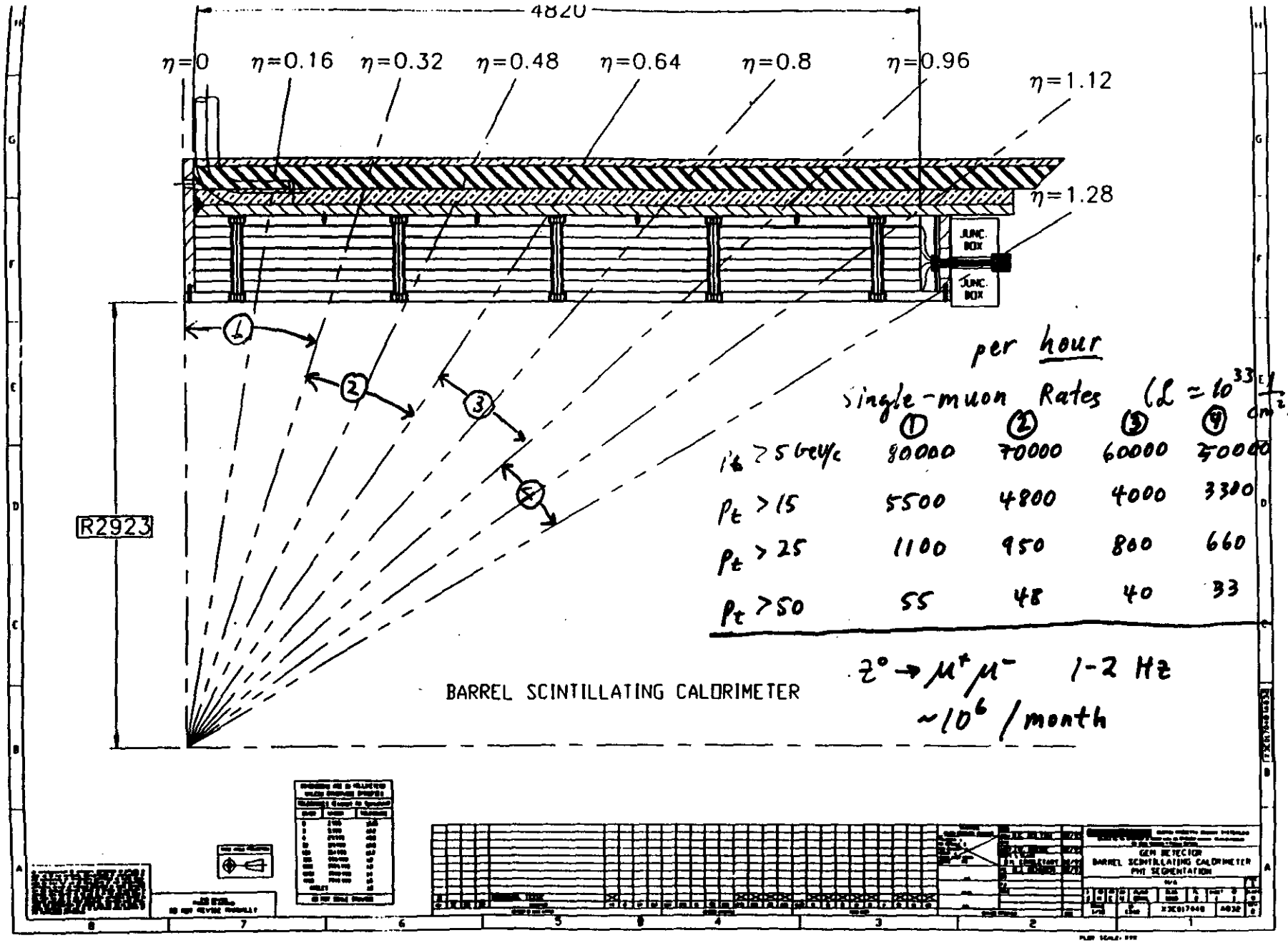
4820
η=0
η=0.16
η=0.32
η=0.48
η=0.64
η=0.8
η=0.96
η=1.12
η=1.28
JUNC. BOX
JUNC. BOX
R2923
BARREL SCINTILLATING CALORIMETER
per hour
single-muon Rates (ℒ = 10^33 cm^-2 s^-1)
① ② ③ ④
pt > 5 GeV/c 80000 70000 60000 50000
pt > 15 5500 4800 4000 3300
pt > 25 1100 950 800 660
pt > 50 55 48 40 33
Z° → μ+μ- 1-2 Hz
~10^6 / month
GEM DETECTOR
BARREL SCINTILLATING CALORIMETER
PMT SEGMENTATION

TRASVERSE SOURCE SCANS

BACK

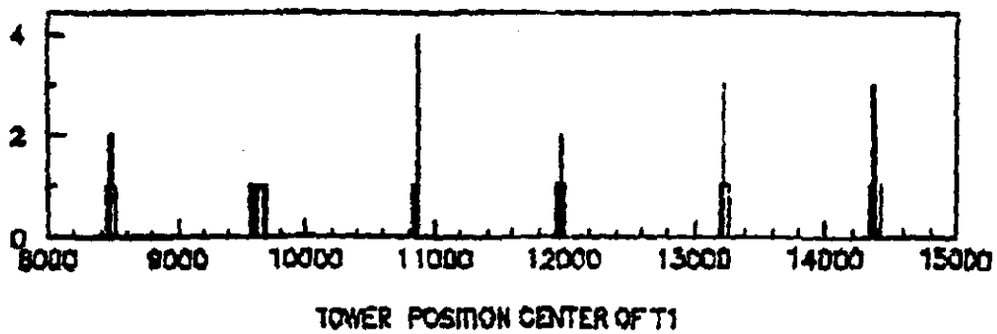

MIDDLE

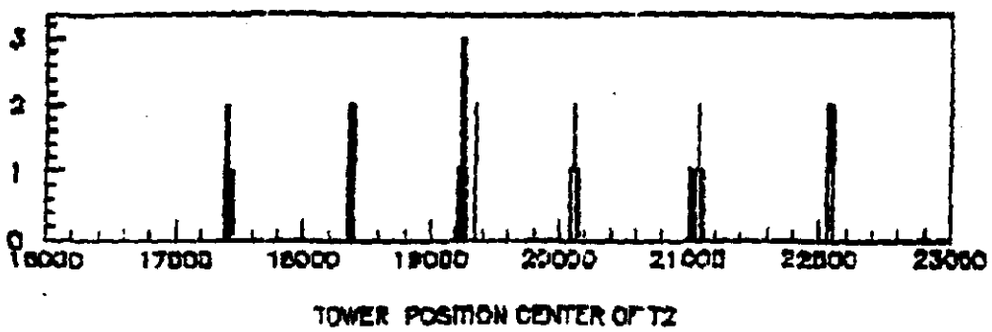

FRONT

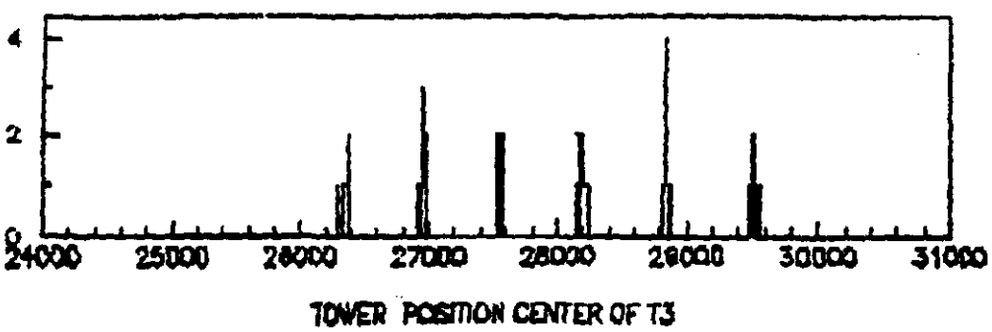

Useful for positions, uniformity checks, etc...
Reproducible.

Comparison between source and beam calibration techniques (~6% av. agreement)

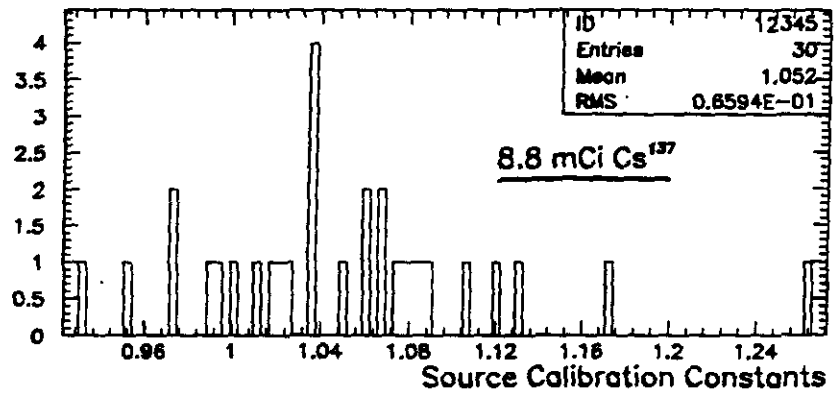

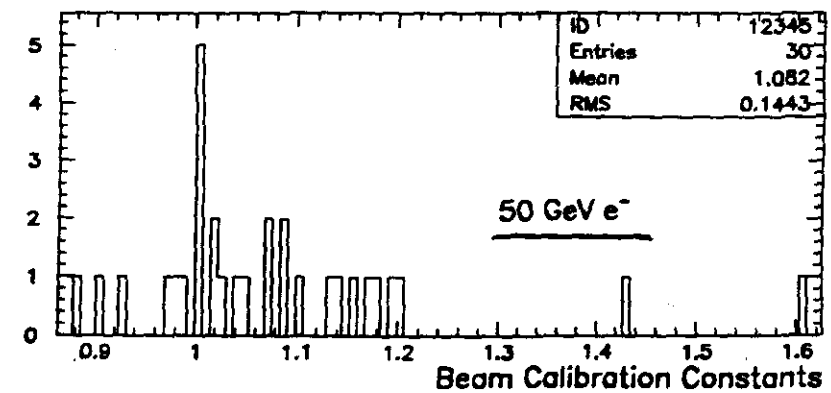

C-LINE #62013
CLEAR TOPPER

C-LINE #6201.3
CLEAR TOPPER

Radioactive Source Tube Locations in Calorimeter

C-G92-414

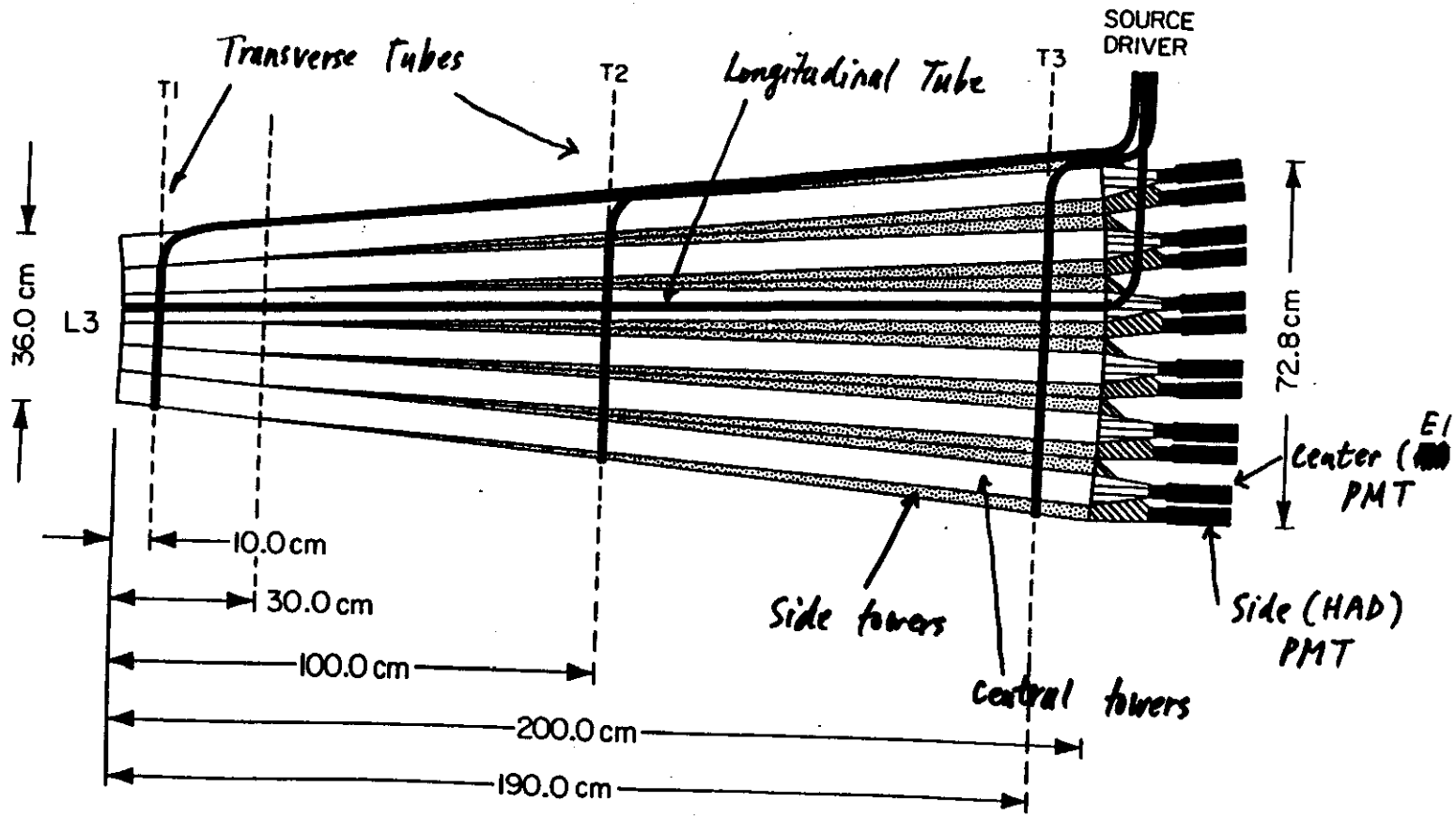

C-LINE #62013
CLEAR TOPPER

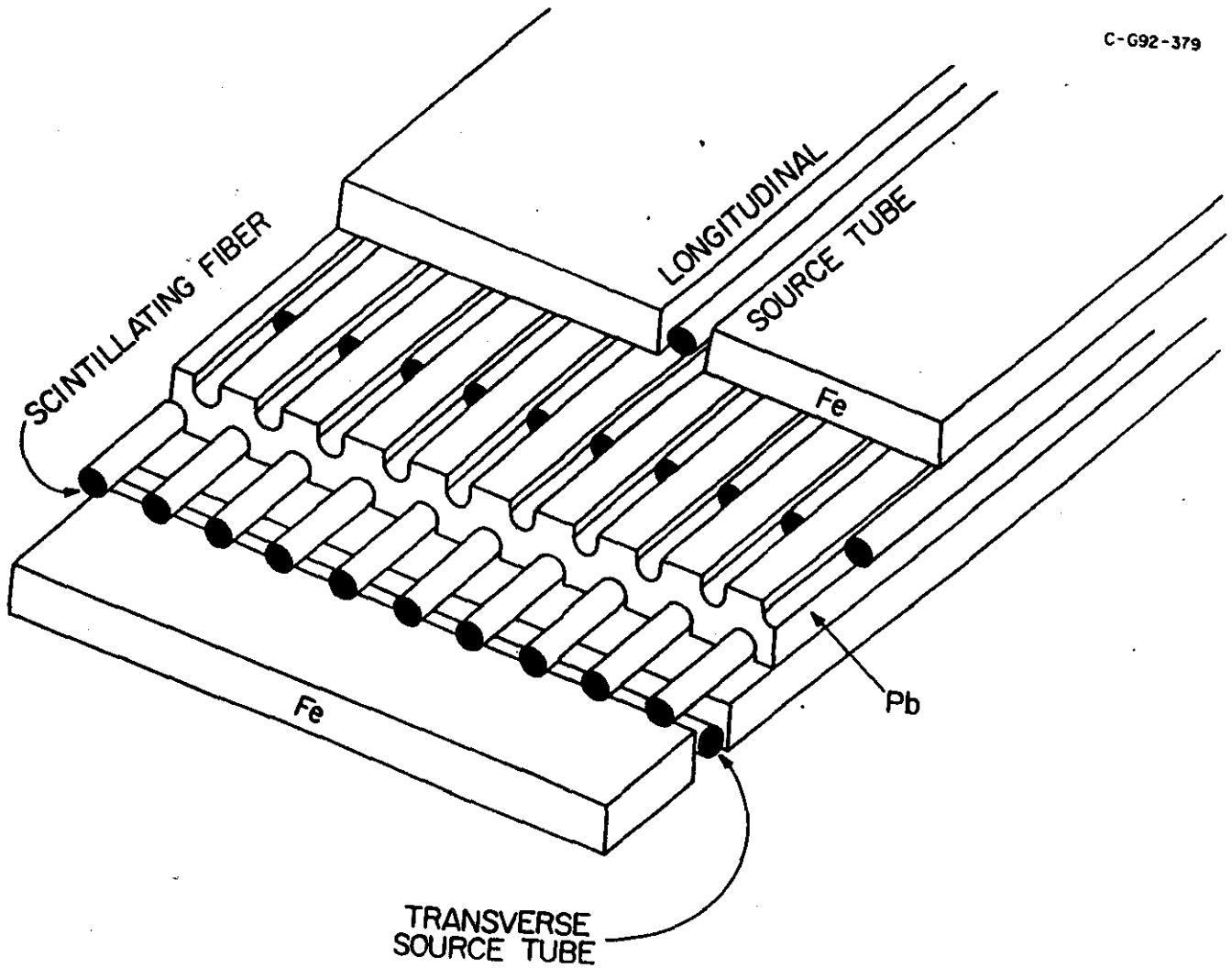

TRANSVERSE SOURCE SCANS FOR B-TOWER
(T2)

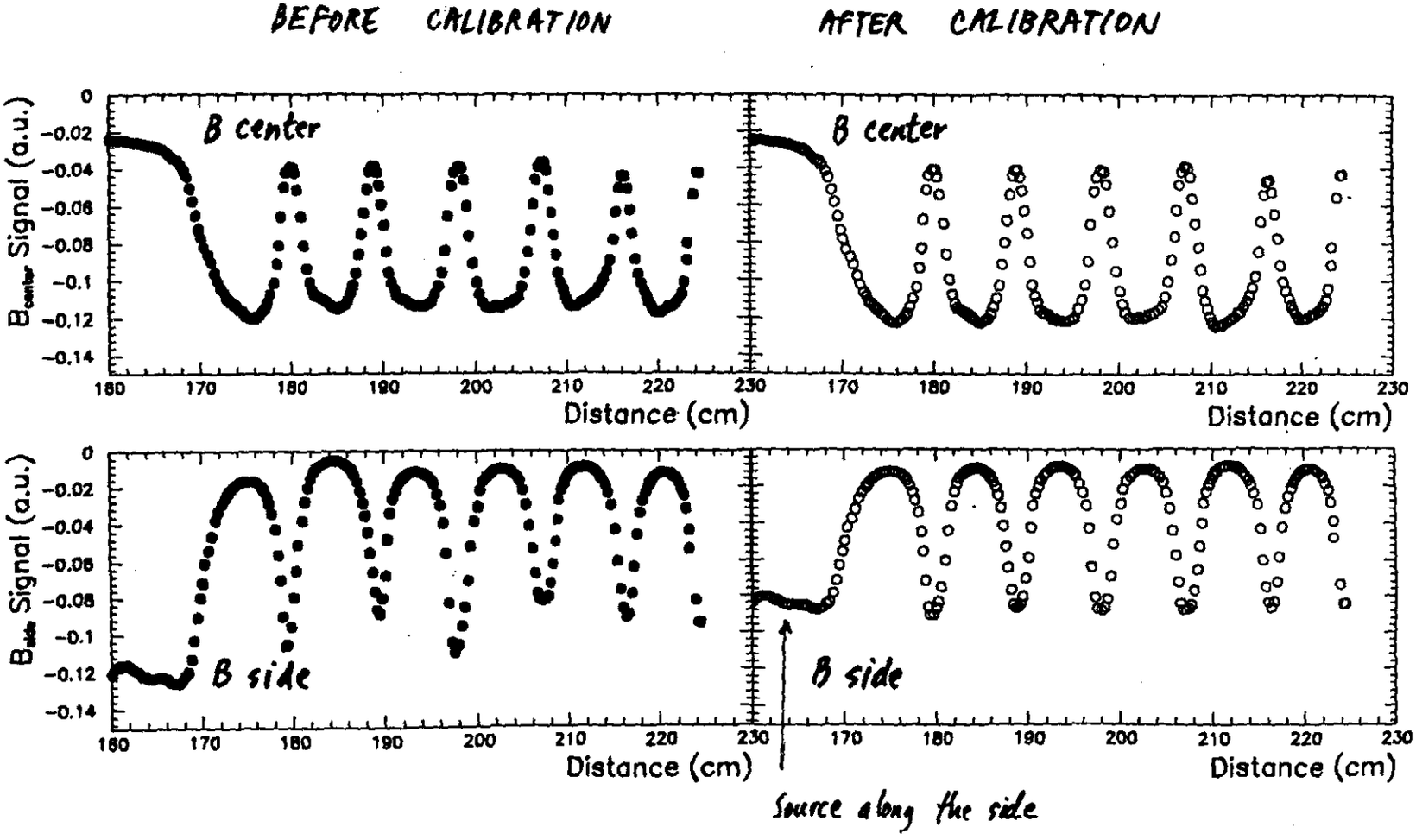

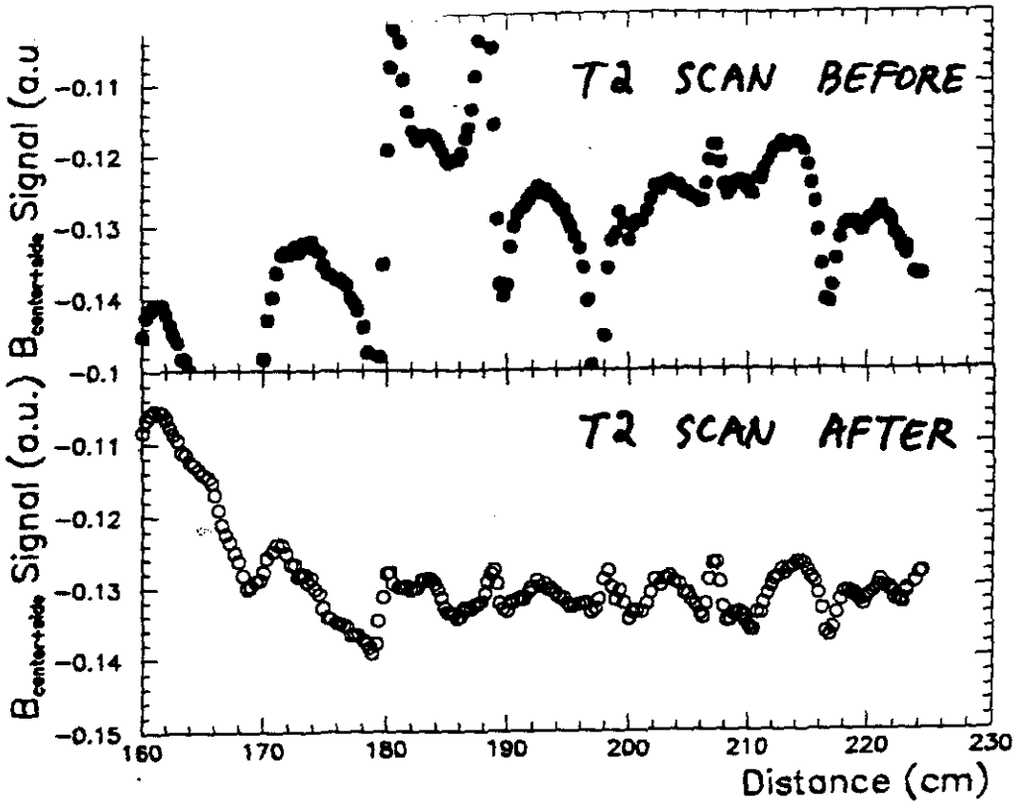

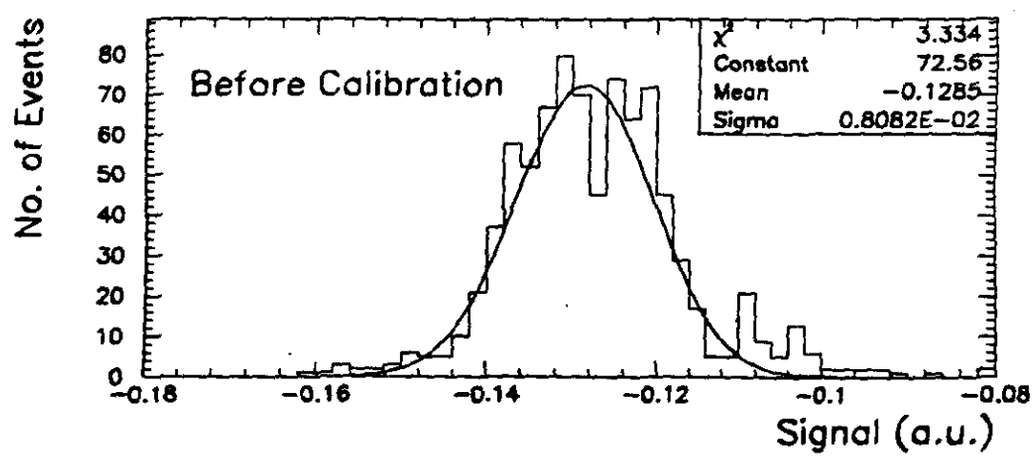

6.2 %

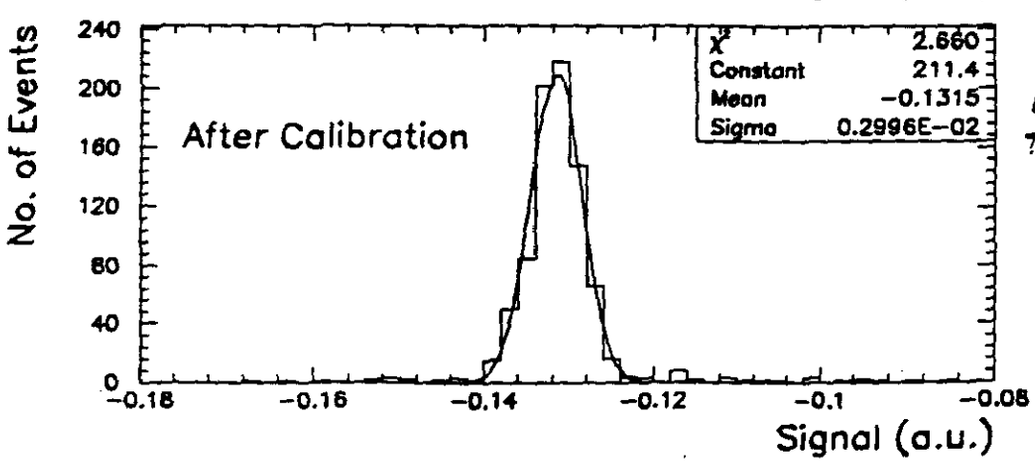

For all towers

2.2 %

Longitudinal Source Scan

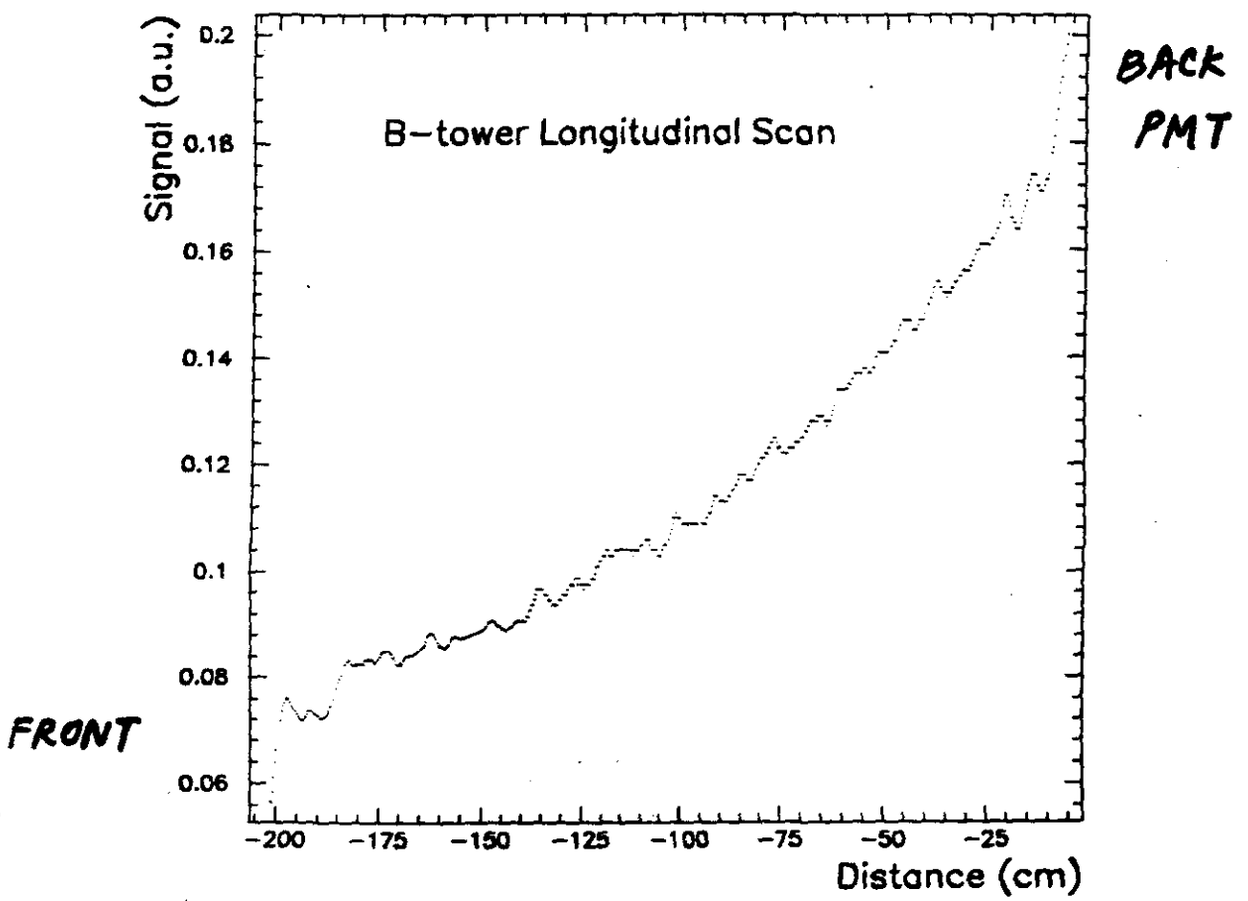

Useful for

- Fiber attenuation length measurement per module.
- Uniformity check (localized problems...)
- Radiation damage checks

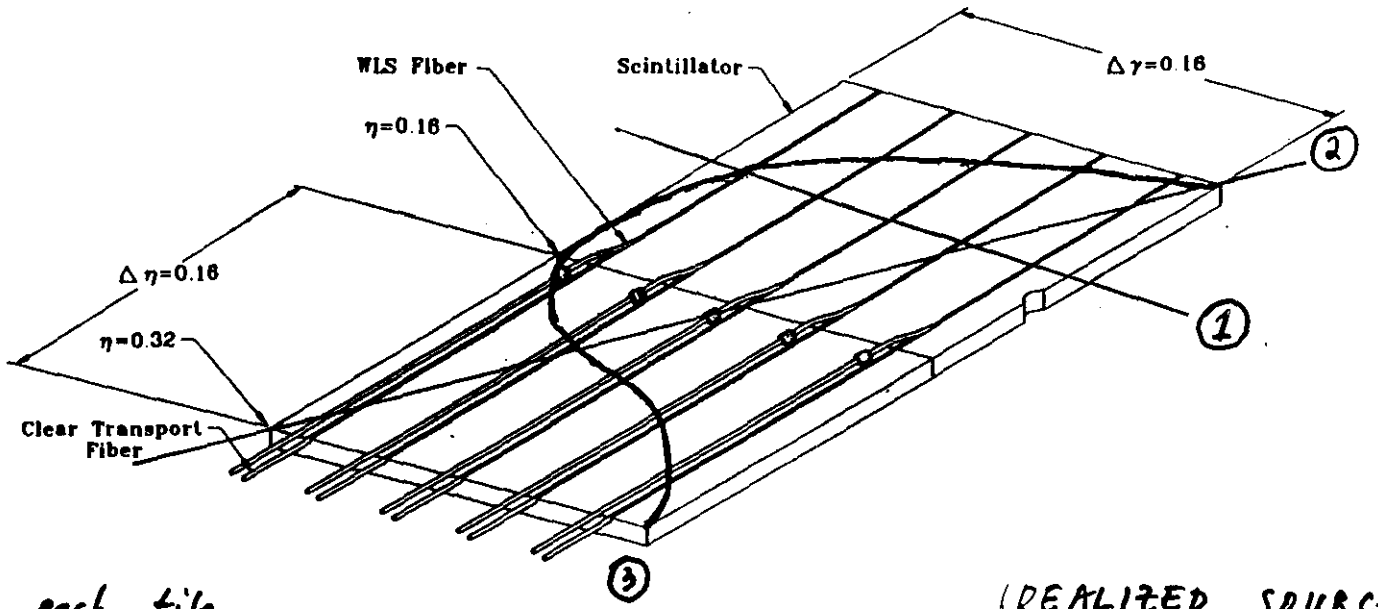

1. Check each tile,
2. Check the "crack",
3. Scan one tile across,
4. Scan the entire layer,

⋮

etc.

IDEALIZED SOURCE TUBE POSITIONS

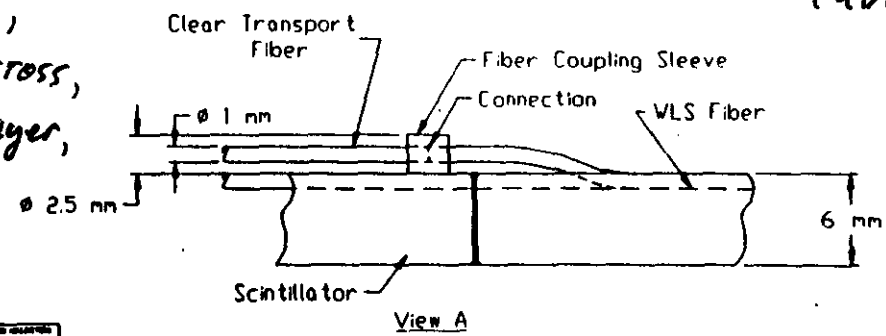

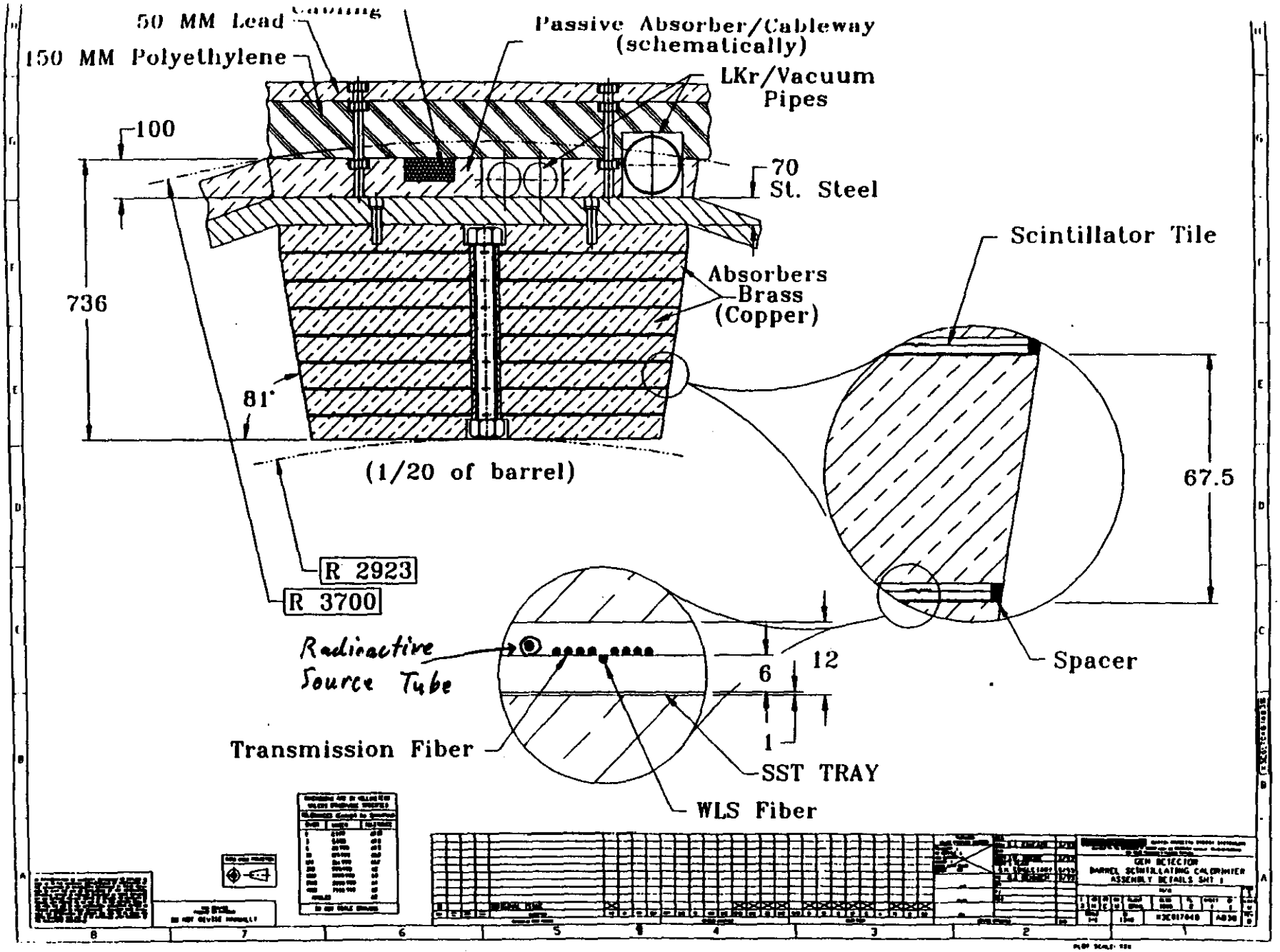
50 MM Lead
150 MM Polyethylene
Passive Absorber/Cableway
(schematically)
LKr/Vacuum
Pipes
100
70
St. Steel
736
Absorbers
Brass
(Copper)
Scintillator Tile
81°
(1/20 of barrel)
67.5
R 2923
R 3700
Radioactive
Source Tube
12
6
1
Spacer
Transmission Fiber
SST TRAY
WLS Fiber

STAINLESS STEEL SOURCE TUBE AND THE SOURCE DIMENSIONS

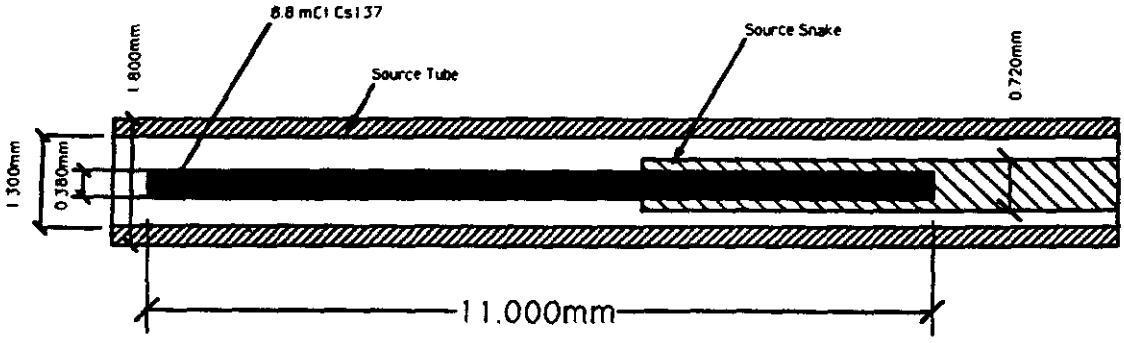

Possible radioactive Sources:

	E_γ	τ	I (nA/mCi)
Co^{57}	0.12	0.75 yr	~0.2
Cs^{137}	0.68	30 yr	~1.5
Mn^{54}	0.84	0.86	~2.0

Possible physics "Sources":

jet + jet (M = 1 TeV), 10^9 $\frac{\text{events}}{\text{SSC yr}}$

isolated μ's (?) $10^5 - 10^7$ $\frac{\text{events}}{\text{SSC yr}}$

WHAT KIND OF A LASER DO WE NEED?

$$N_\gamma = 10^6 \text{ pe/ch} \; \frac{1}{0.15} \; \frac{1}{0.10} \; \frac{1}{0.50} \; \frac{1}{0.20} \; 400 \; \phi$$

PMT. Q.E. ← $\frac{1}{0.15}$

Light capture ← $\frac{1}{0.10}$

Reflection ← $\frac{1}{0.50}$

Loss at gaps,... ← $\frac{1}{0.20}$

N.ch. ← 400

ϕ ← fib. accept to point source

$d_{fib} = 1$ mm , $d_{core} = 0.8$ mm 20 bunches × 20 fibs = 400

$$\pi r^2_{bunch} = 20\left(\pi (0.5\text{ mm})^2\right)\frac{1}{0.907} = 17.32 \text{ mm}^2$$

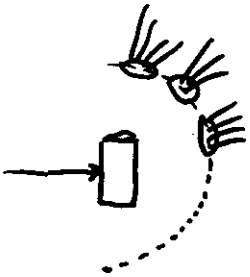

$$r_{bunch} = 2.35 \text{ mm}$$

$$S = 4\pi R^2_{sphere} = 17.32 \text{ mm}^2 \times 20 \times 2 \times \frac{1}{0.907} = 763.84 \text{ mm}^2$$

$$R^2_{sph} = 7.79 \text{ mm}$$

$$\phi_{acc} \simeq \frac{\text{Area by fibs}}{\text{Area of sph}} = \frac{400\left(\pi (0.4)^2\right)}{763.82} \simeq 0.24$$

$\therefore$ N_γ needed $\simeq 6.4 \times 10^{10} \sim 10^{11}$ photons

$1\,\mu J = 2.5 \times 10^{12}$ photons at 450 nm

$\therefore$ we are ok.

LASER (DYES)

10 μJ – 200 μJ per pulse

~10 Hz rep rate

Many dyes are available.

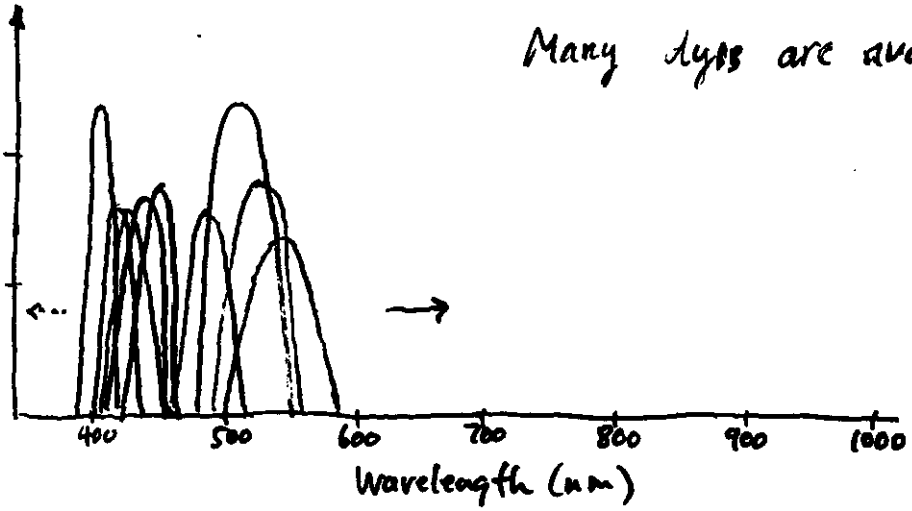

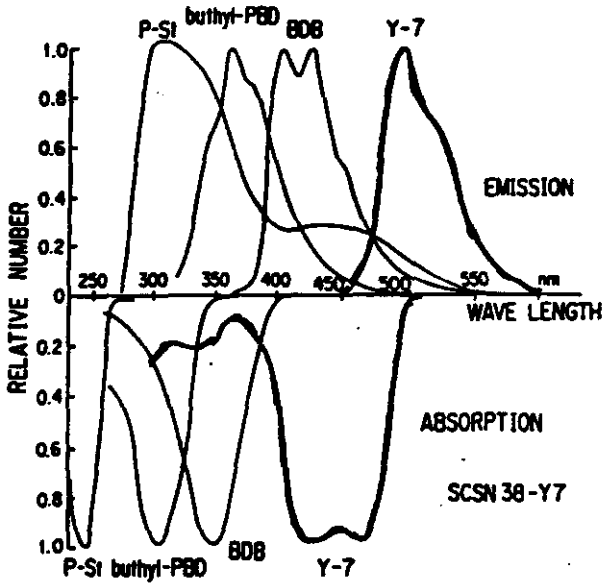

Use tunable laser

N_2 + dye

2 DIFFERENT DYES

- MATCH ABSORBTION SPECTRUM OF SCINTILLANING TILE ($\lambda_{SCI\,ABS}$)

  $\lambda_{SCI\,ABS} \simeq 400-500$ nm

- MATCH λ_{PMT}

  $\lambda_{PMT} \simeq 400-450$ nm

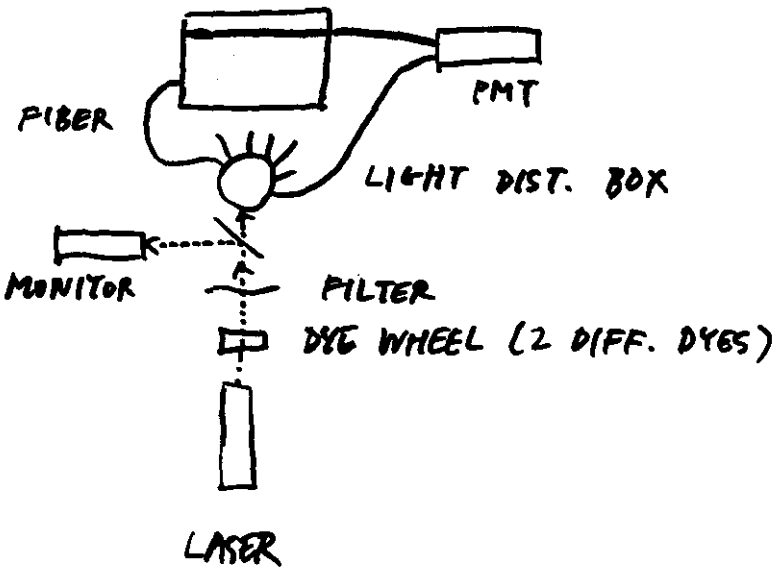

LASER SYSTEM

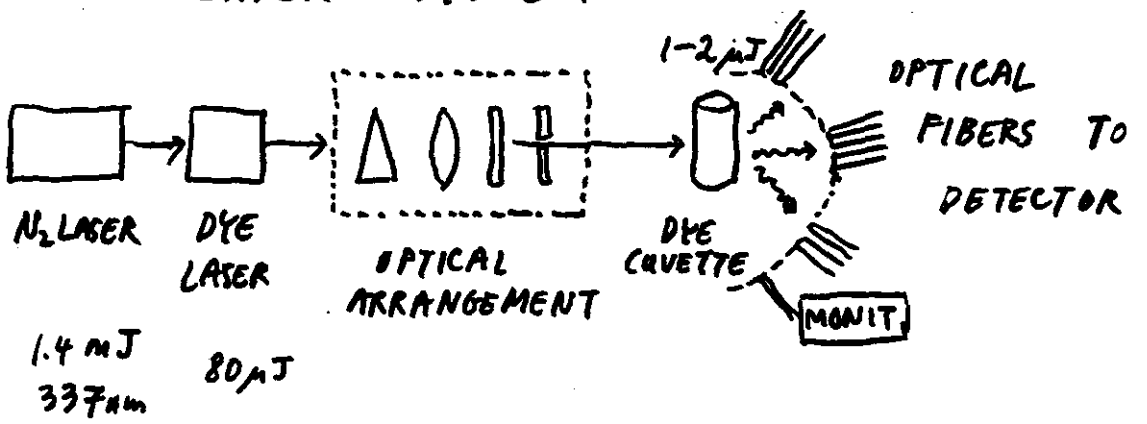

Check gain, linearity, timing, ...

Typical laser prop.

- 20-50 Hz rep rate
- 200-600 ps pulse width
- ±5 % Energy
- ±2 ns trigger
- 100's of μJ
- Large spectrum with dyes (~330-800 nm)

GENERIC CALORIMETER BLOCK

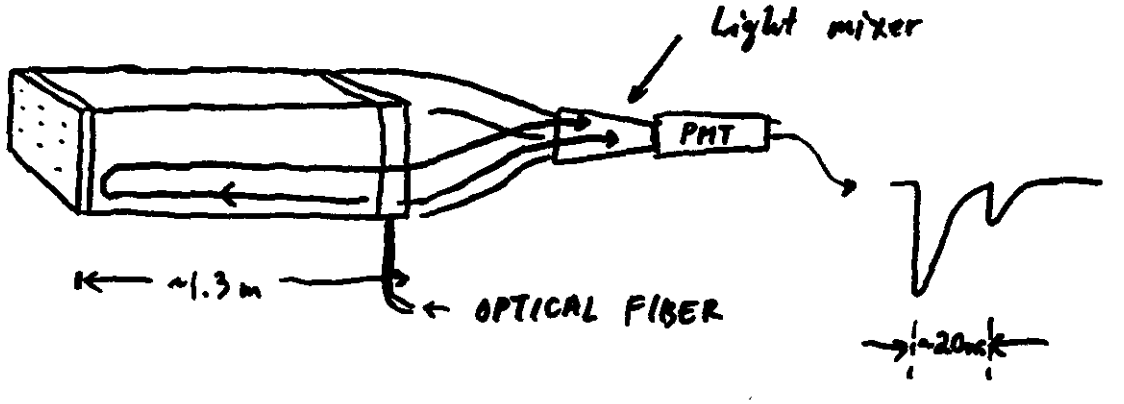

MONITORING:

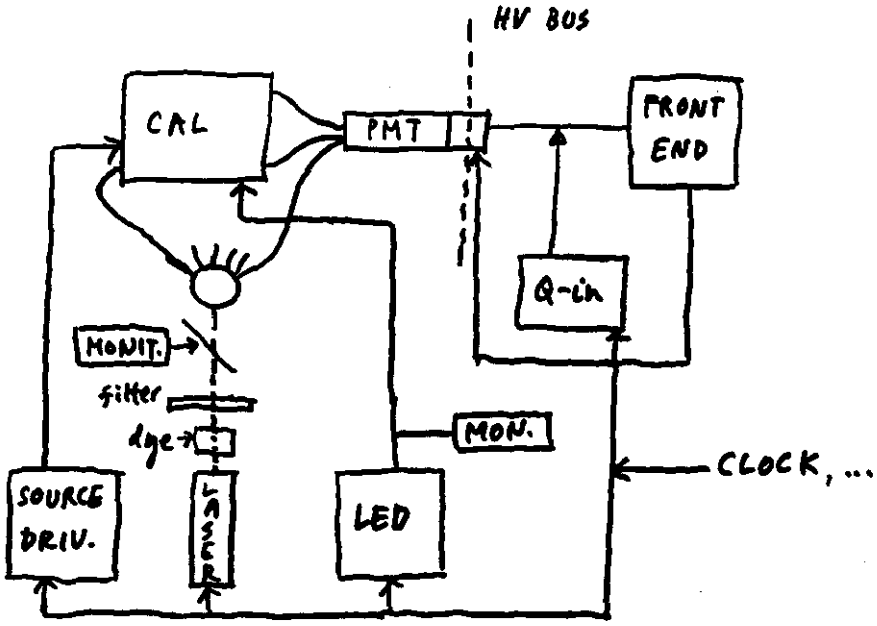

LASER : N_2 laser + dye (357 - 710 nm)
Large photon yield, 10 μJ @ 20-100 Hz
200 ps pulse width
Trigger jitter 2-3 ns
Intensity variation ±5 % but can be monitored.

LED : Temp. stabilization
Monitoring is possible < 1 % (done by several exp.)
Use PIN diodes

SOURCE :
Accurate, reproducible source driver exists
Method established for calibration
Cs^{137} 8.8 mCi
How do we put source tubes in detector?

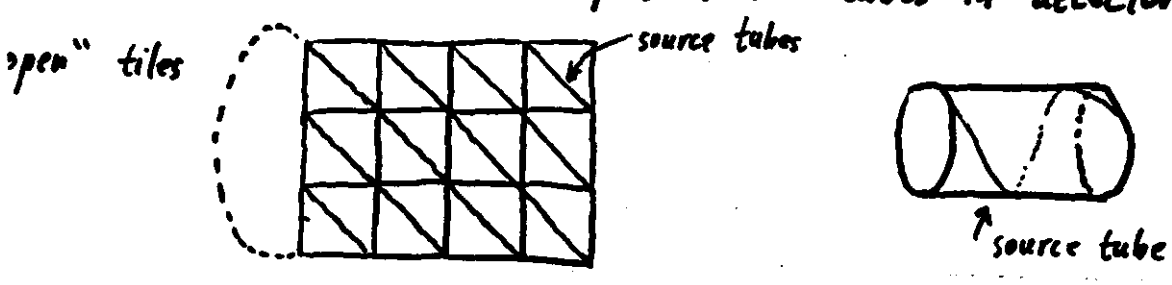

HAMAMATSU

TENTATIVE DATA
Oct. 1992

MULTIANODE PHOTOMULTIPLIER TUBE ASSEMBLY H4140-20

Position Sensitive 256 (16 × 16 Matrix Array) Multianode
Very Low Crosstalk Less than 2%
Stable Operation in High Magnetic Fields beyond 1.5 Tesla
3 Inch Square, Bialkali Photocathode, Proximity 16-stage Fine Mesh Dynodes
Multi-pin Connector Output with Built-in Voltage Divider Circuit

10 K$ per PSPM7

GENERAL

Parameters		Ratings	Units
Spectral Response		300 to 650	nm
Wavelength of Maximum Response		420 ± 50	nm
Photocathode	Material	Bialkali	–
	Minimum Effective Area	40 × 40 (square)	mm
Window	Material	Borosilicate glass	–
	Shape	Plano-plano	–
Dynode	Structure	Proximity fine mesh	–
	Number of Stages	16	–
Anode	Number	256 (16 × 16)	–
	Pixel Size	1.8	mm dia.
	Pitch	2.54	mm

MAXIMUM RATINGS (Absolute Maximum Values)

Parameters		Ratings	Units
Supply Voltage	Between Anode and Cathode	2700	Vdc
	Between Anode and Last Dynode	250	Vdc
Average Anode Current (Total)		0.1	mA
Ambient Temperature		-30 to +50	℃

CHARACTERISTICS (at 25℃)

Parameters		Min.	Typ.	Max.	Units
Cathode Sensitivity	Quantum Efficiency at 400nm	–	20	–	%
	Luminous (2856K)	–	60	–	μA/lm
	Blue (CS No. 5-58 filter)	–	7	–	μA/lm-b
Anode Sensitivity *	Luminous (2856K)	–	60	–	A/lm
Current Amplification *		–	1.0×10^6	–	–
Anode Dark Current (after 30min. storage in darkness) **		–	300	–	nA
Time Response *	Anode Pulse Rise Time	–	2.7	–	ns
Crosstalk at One Adjacent Anode		–	2	–	%

* At -2500V and no magnetic field
** Anode Dark Current : at connecting whole anodes

Information furnished by HAMAMATSU is believed to be reliable. However, no responsibility is assumed for possible inaccuracies or ommissions. Specifications are subjected to change without notice. No patent rights are granted to any of the circuits described herein.

CROSS-TALK

Table 1 Cross-Talk Characteristics of Newly Developed 8x8 MA-PMT

0.1	0.3	0.3	0.3	0.1
0.3	1.0	Y-7	1.2	0.4
0.4	[illegible]	[illegible]	1.0	0.5
0.4	1.2	[illegible]	1.4	0.5
0.1	0.4	0.5	0.4	0.1

Nomalized at Anode # 28 Output
Supply Volts : -2000 V / Y-7 Bundle of 4x 0.83 mm ϕ

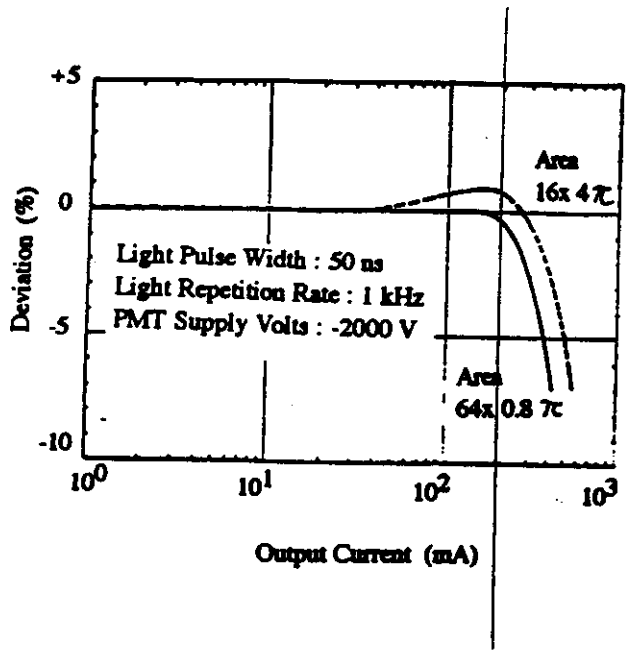

Current Linearity

(Dynamic Range)

200 mA

200 μ GRID DYNODE

3/5

(DETAILS OF GRID STRUCTURE)

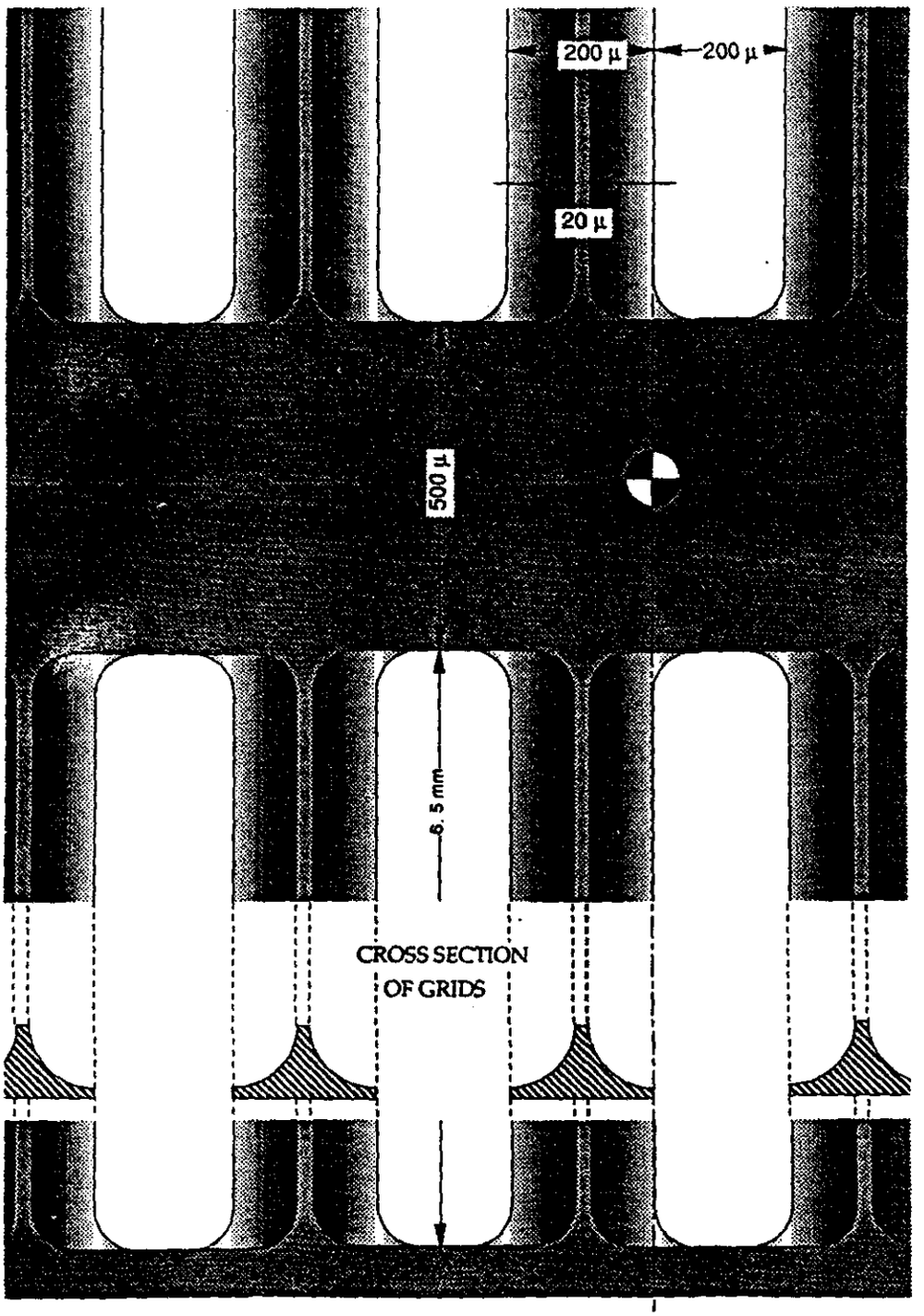

(Designed by K. KURODA)

200 μ GRID DYNODE

1/5

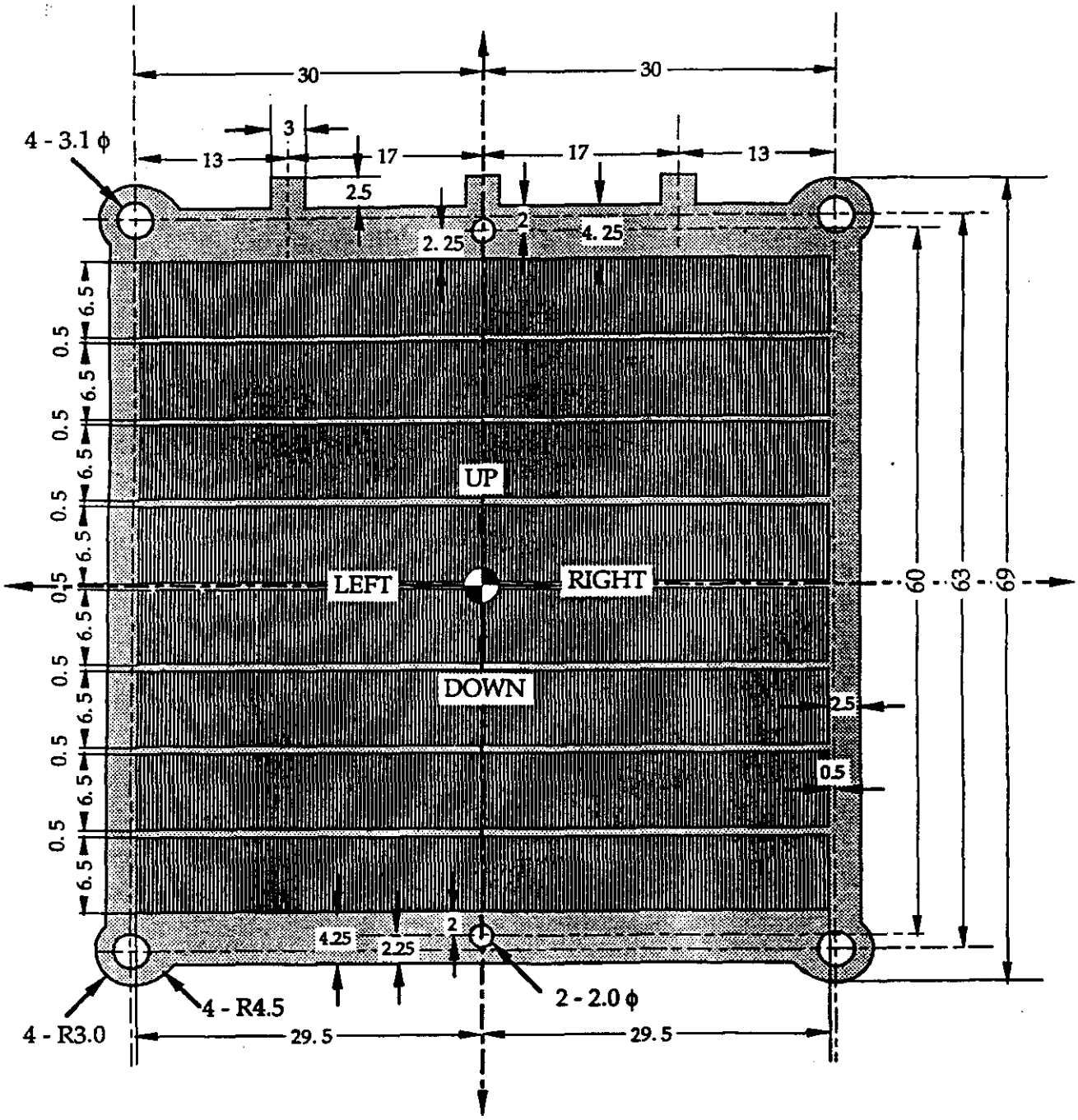

(Designed by K. KURODA)

a) Conventional Type

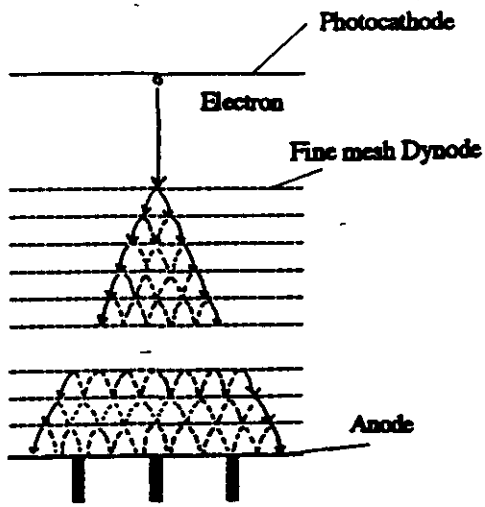

b) Newly Developed Type

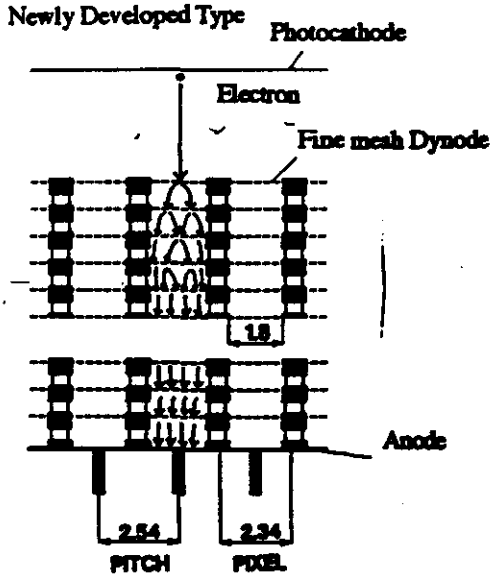

CROSS-TALK REDUCTION SCHEME

(Hamamatsu)

ALTERNATIVE

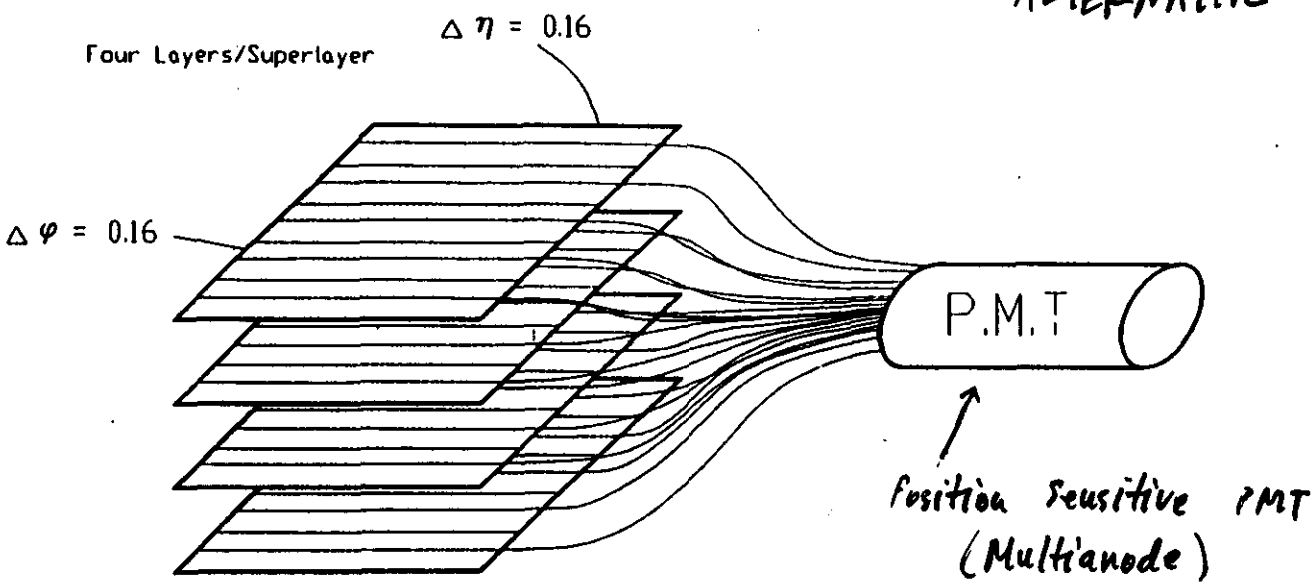

GEM DETECTOR
BARREL SCINTILLATING CALORIMETER
READOUT CHANNEL - ISOMETRIC

Can we imagine other realistic possibilities ?

Input :

- Read each fiber individually,
- Possible ϕ information for SBC,
- Summing combination of individual fibers may prove useful,
- Do not sacrifice gain compared to usual PMT
- Operate in $\vec{B}$

Output :

- Consider position sensitive PMT
- \$\# ??

$$\frac{\$\ 1250}{20\ \text{fib}} = 62.50\ \$/\text{fiber} \qquad 3432\text{-}01$$

$$\frac{\$\ 10000}{256\ \text{fib}} = 39\ \$/\text{fiber} \qquad 4140\text{-}20$$

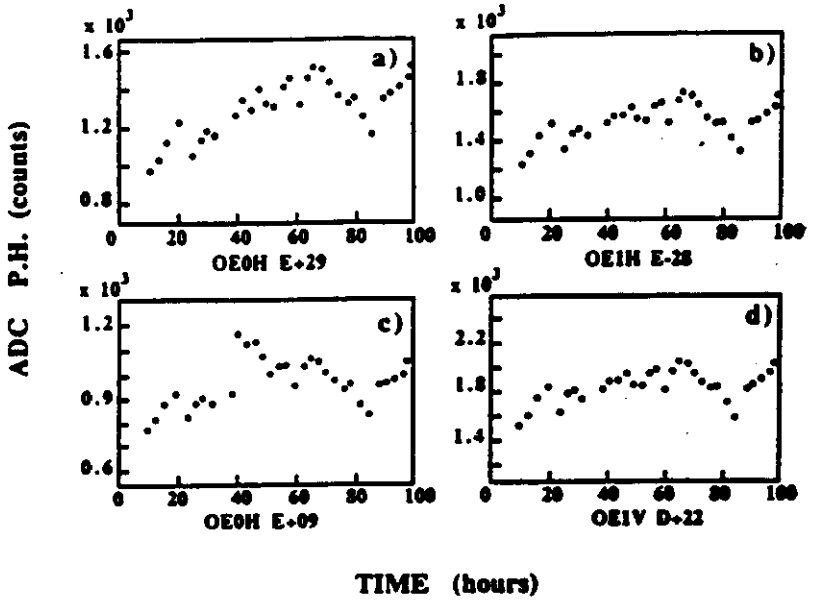

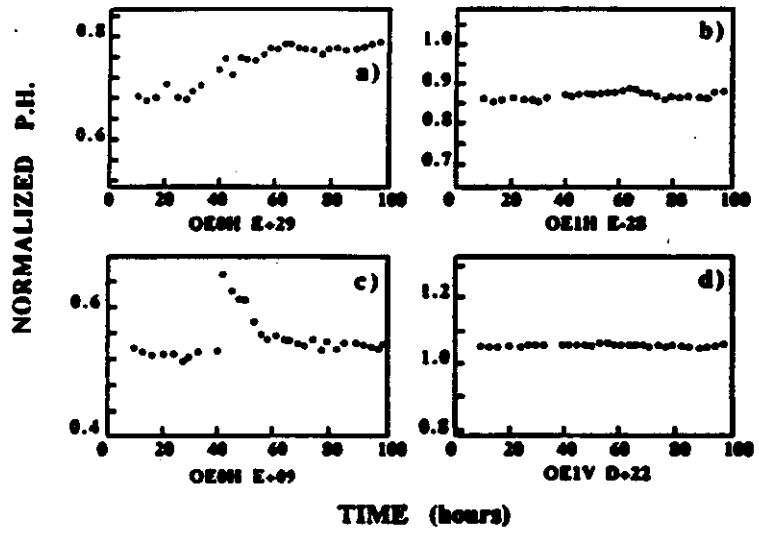

E687 LASER MONITORING SYSTEM
FNAL

H. Kichimi et al., NIM A 325 (1993) 451-457

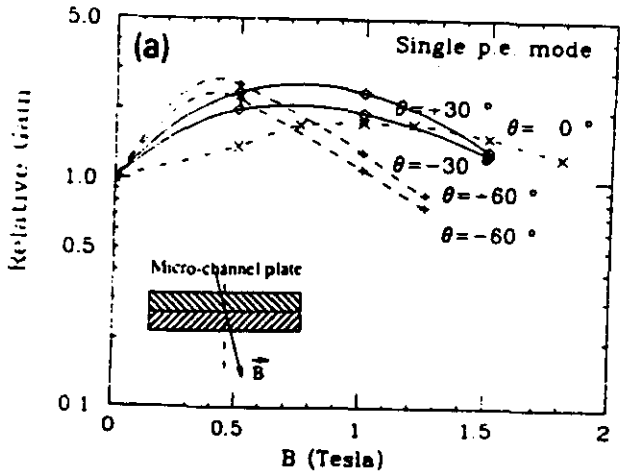

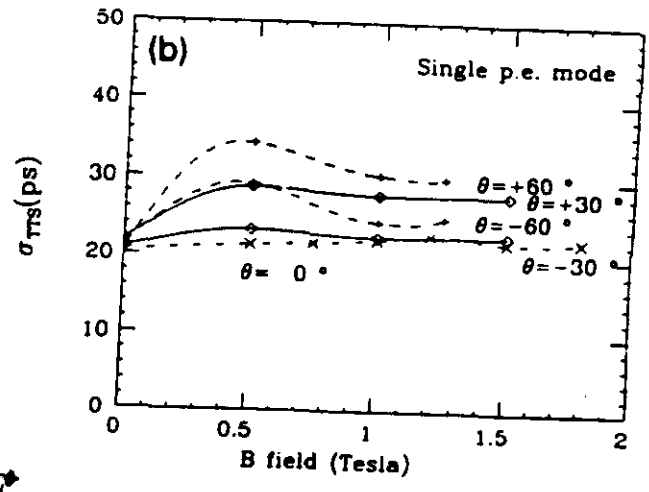

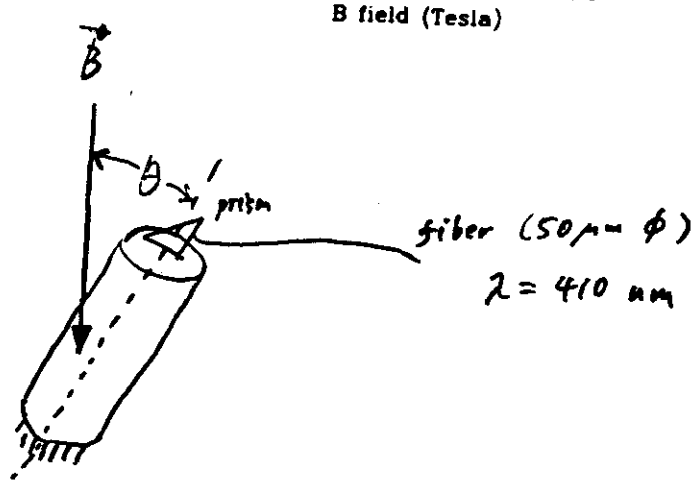

2" FM

2496-05

RELATIVE GAIN

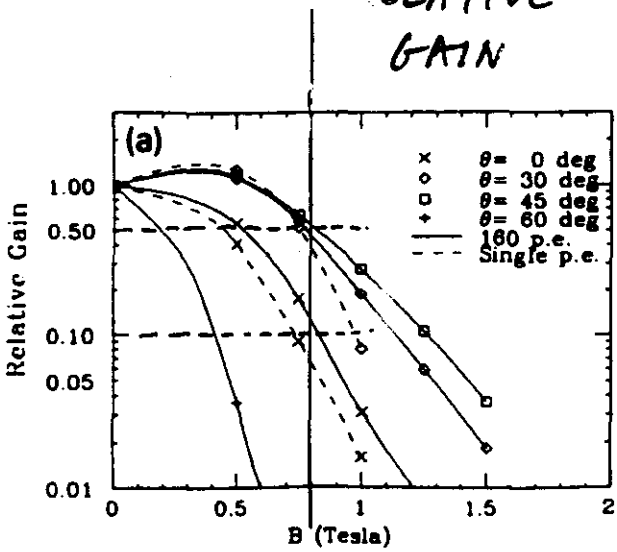

TRANSIT TIME SPREAD

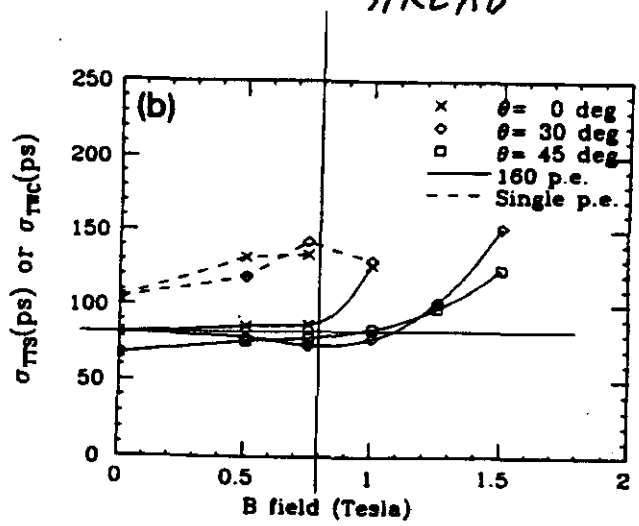

0.8T { At 0° ⇒ ~10%
At 30°-45° ⇒ ~50%

30° ≤ θ ≤ 45°

0.8 T $\sigma_{TTS} \leq 100$ ps

Hamamatsu R2490 #ZD9980 2" PMT @ −2200V

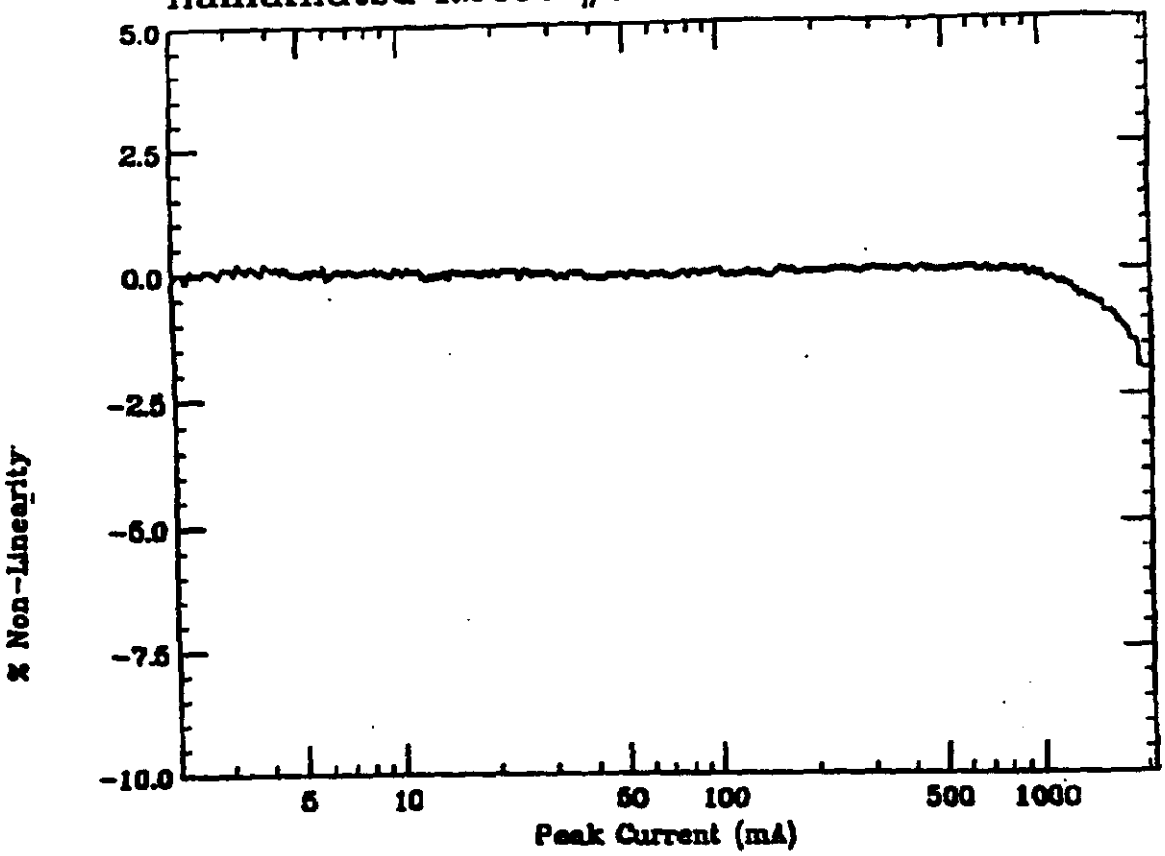

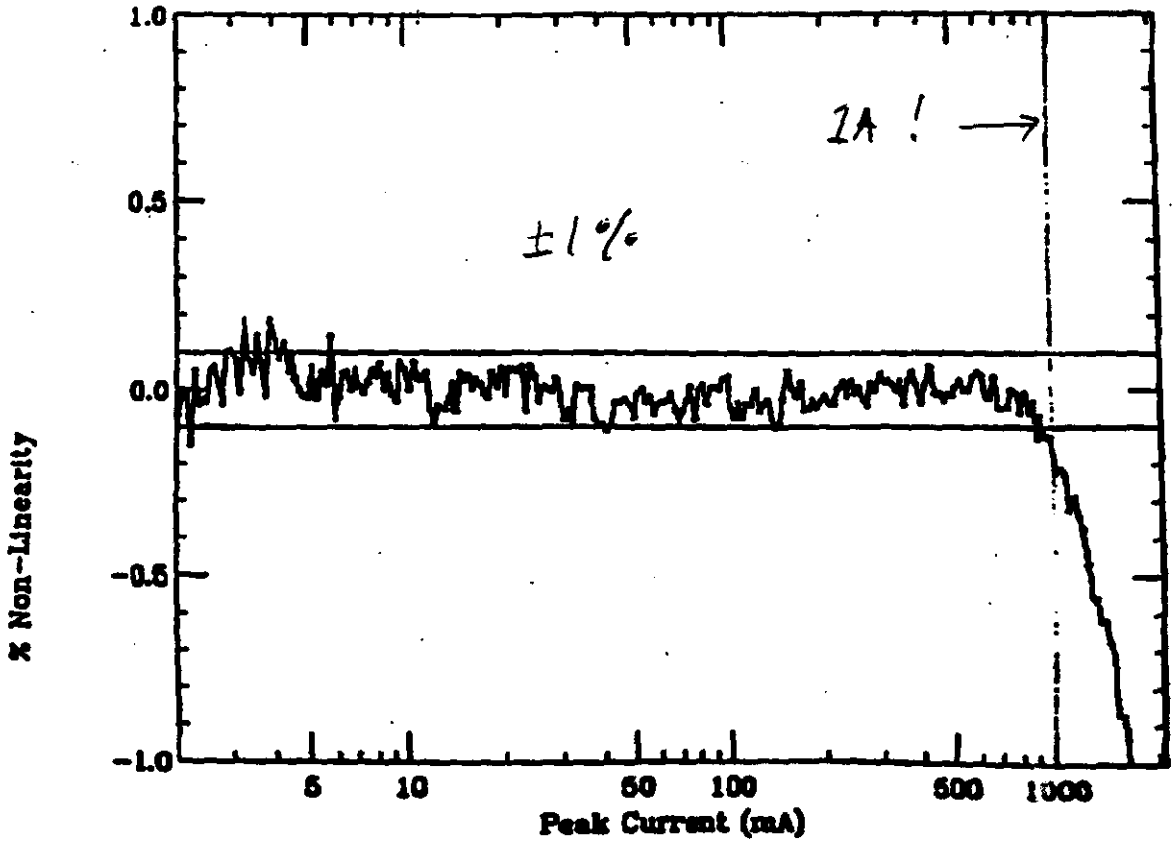

Hamamatsu R2490 #ZD9980 2" PMT @ -2200V

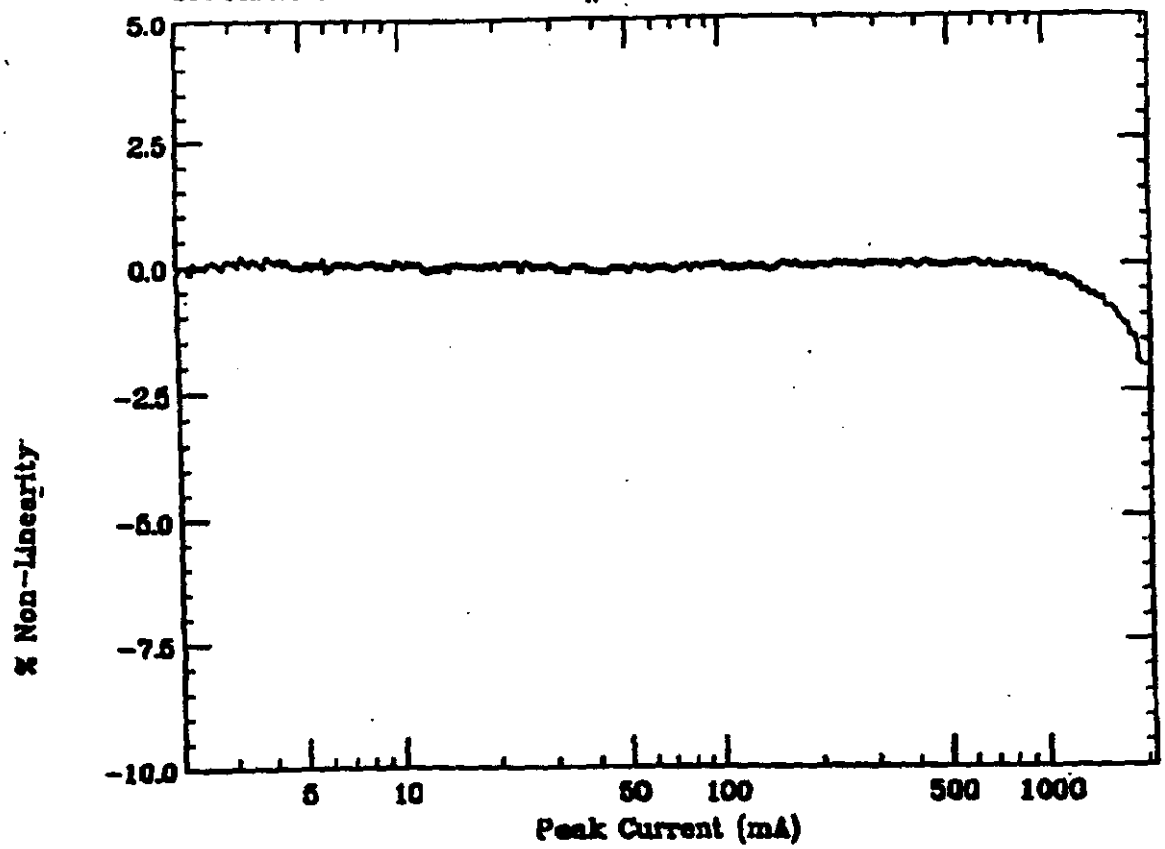

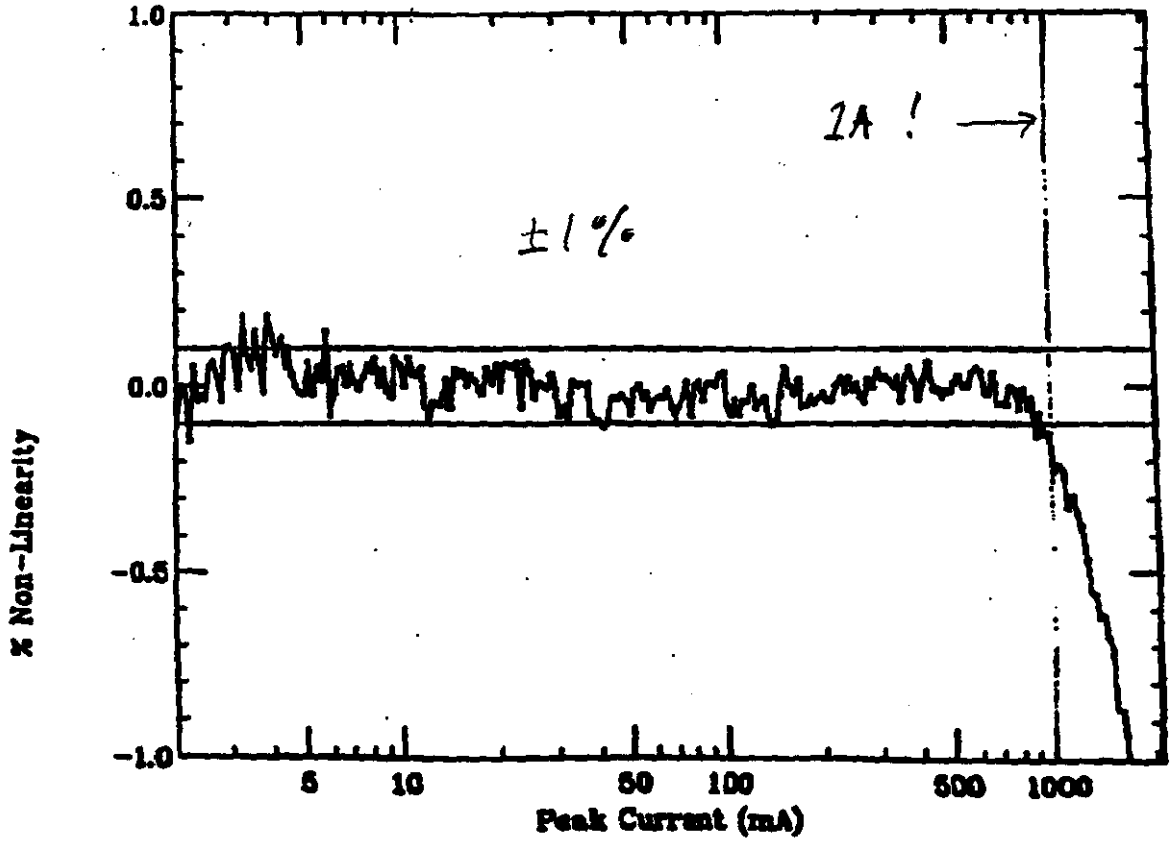

Figure 1: Typical Spectral Response

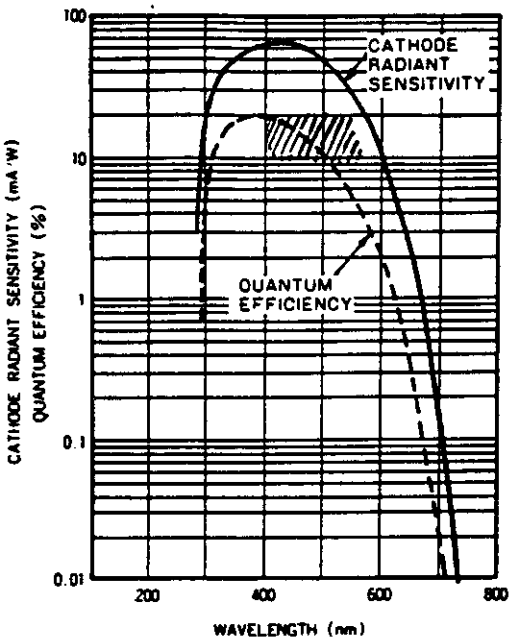

Q.E. ≃ 10-15 %

Figure 2: Dimensional Outline and Basing Diagram (Unit:mm)

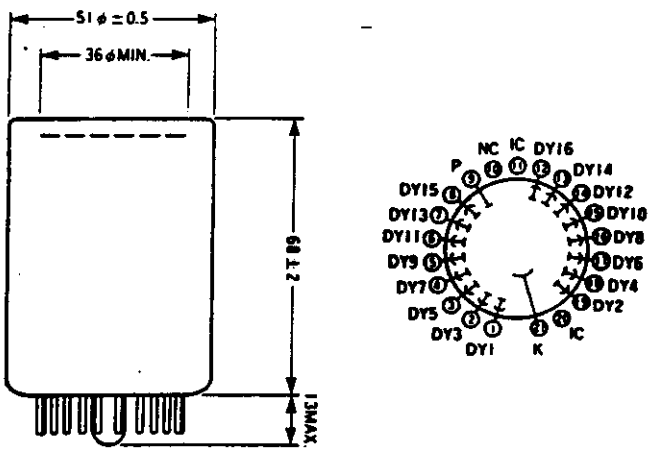

HAMAMATSU

TENTATIVE DATA
June 1990

PHOTOMULTIPLIER TUBE R2490-05

FOR HIGH MAGNETIC ENVIRONMENTS

Stable Operation in High Magnetic Fields beyond 1 Tesla(Gain:2.7 × 10^5 at 1T.) 2 Inch Diameter, Proximity Photocathode and Mesh Dynodes Regrade of R2490-01 with Same Configuration

$ 2204 per PMT

GENERAL

Parameters		Ratings	Units
Spectral Response		300 to 650	nm
Wavelength of Maximum Response		420 ± 50	nm
Photocathode	Material	Bialkali	–
	Minimum Useful Diameter	36	mm dia.
Window	Material	Borosilicate glass	–
	Shape	Plano-plano	–
Dynode	Secondary Emitting Surface	Bialkali	–
	Structure	Proximity mesh	–
	Number of Stages	16	–
Base		21-pin glass base	–
Suitable Socket		E678-21A (supplied)	–

MAXIMUM RATINGS (Absolute Maximum Values)

Parameters		Ratings	Units
Supply Voltage	Between Anode and Cathode	2700	Vdc
	Between Anode and Last Dynode	250	Vdc
Average Anode Current		0.1	mA
Ambient Temperature		-80 to +50	℃

CHARACTERISTICS (at 25℃)

Parameters		Min.	Typ.	Max.	Units
Cathode Sensitivity	Quantum Efficiency at 390nm	–	20	–	%
	Luminous (2856K)	50	60	–	μA/lm
	Blue (CS No.5-58 filter)	6	7	–	μA/lm-b
Anode Sensitivity	Luminous (2856K)	50	180	–	A/lm
Current Amplification	At 0 tesla	–	3.0 × 10^5	–	–
	At 0.5 teslas		2.2 × 10^5	–	–
	At 1 tesla		2.7 × 10^5	–	–
Anode Dark Current (after 30min. storage in darkness)		–	200	2000	nA
Time Response	Anode Pulse Rise Time	–	2.1	–	ns

VOLTAGE DISTRIBUTION RATIO AND SUPPLY VOLTAGE

Electrode	K	Dy1	Dy2	Dy3	Dy4	Dy5	Dy6	·····	Dy16	P
Ratio	2	1	1	1	1	1		·····	1	1

Supply Voltage : 2500Vdc, K : Cathode, Dy : Dynode, P : Anode

nformation furnished by HAMAMATSU is believed to be reliable. However, no responsibility is assumed for possible inaccuracies or ommission. Specifications are subjected to change without notice. No patient right are granted to any of the circuits described herein.

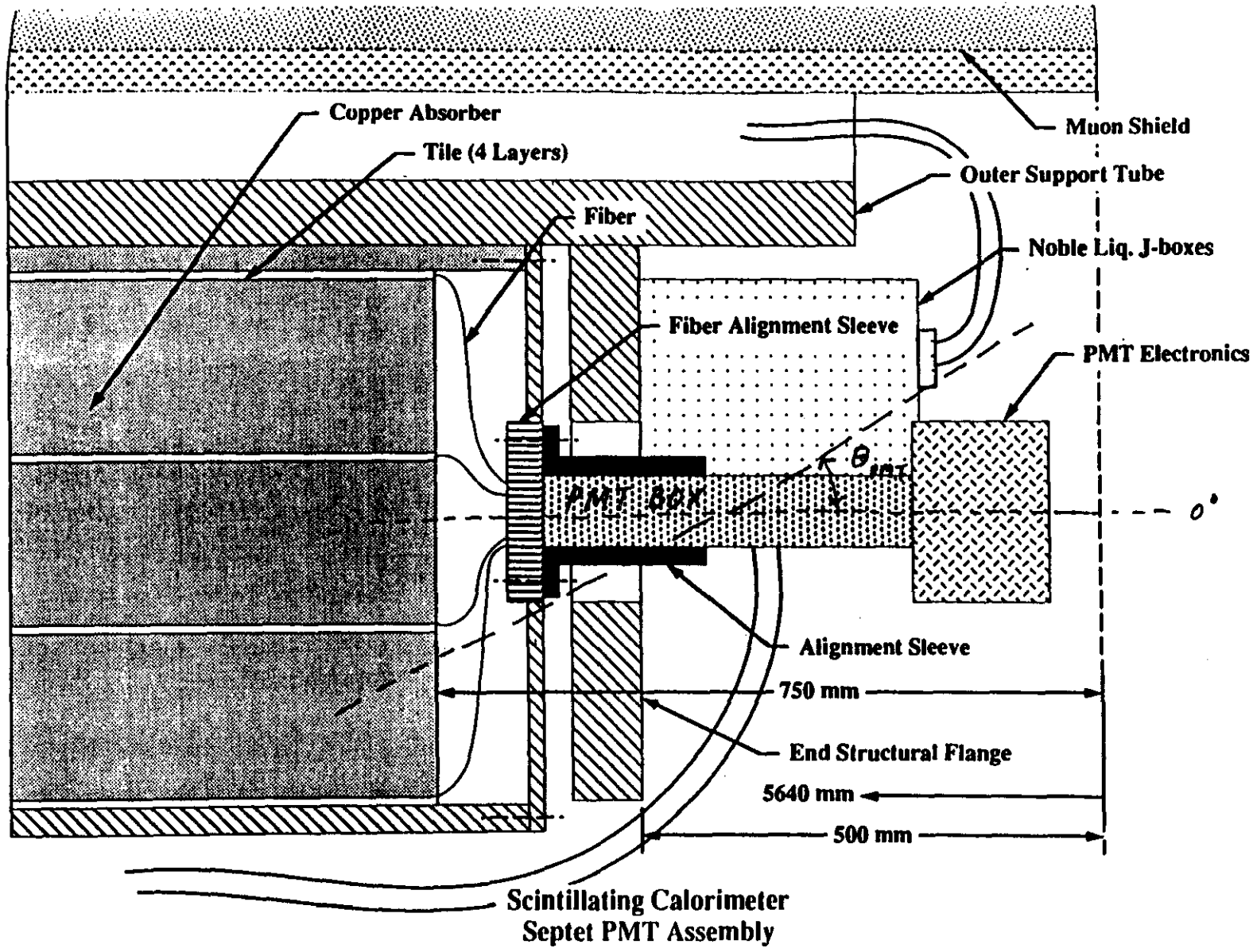

G.TC.009

ORNL

$30° \lesssim \theta_{PMT} \lesssim 45°$

Figure 3: Typical Current Amplification and Dark Current in Magnetic Field (Parallel to Tube Axis)

gain = 7×10^5

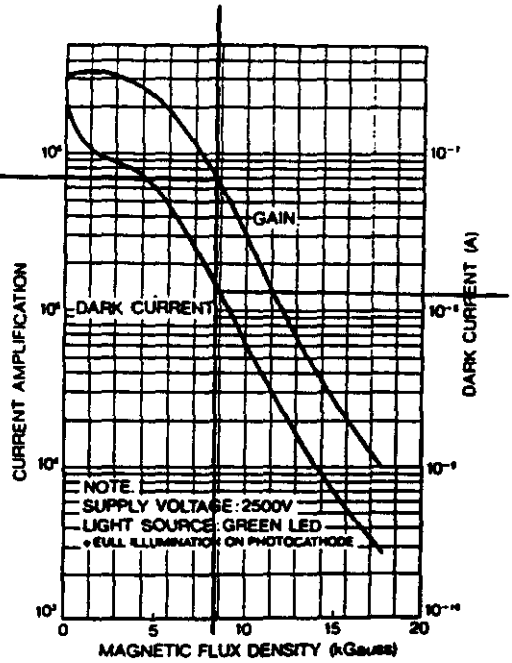

~ 0.8 Tesla

dark current ≃ 10 nA

Both gain and dark current decrease logarithmically with increasing magnetic field.

Figure 4: Typical Current Amplification vs. Magnetic Flux Direction

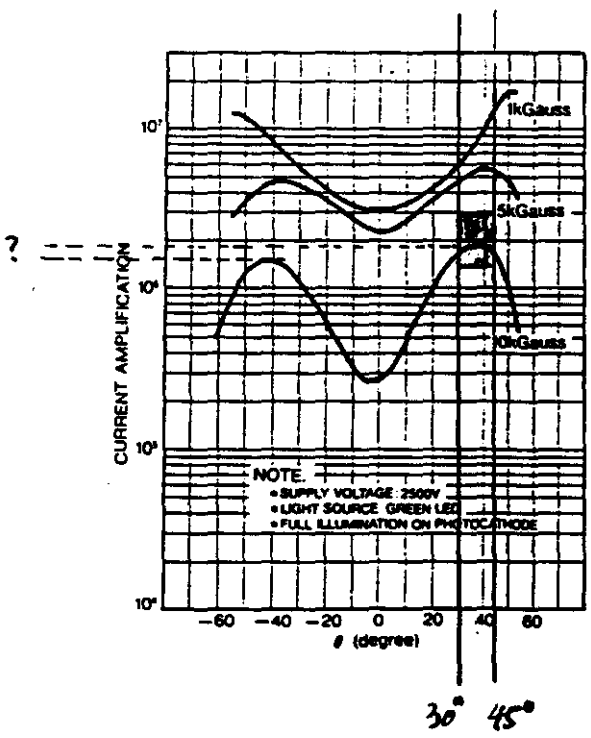

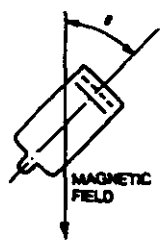

θ is important!

$30° \leq \theta \leq 45°$

at 0.8 Tesla

gain can be 2×10^6

Figure 1: Typical Spectral Response

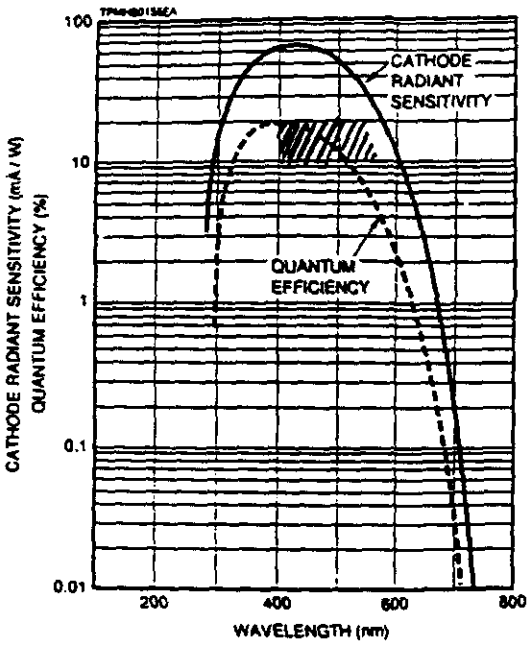

Q.E. ≃ 10-15 %

Figure 2: Current Amplification in Magnetic Field (Parallel to Tube Axis)

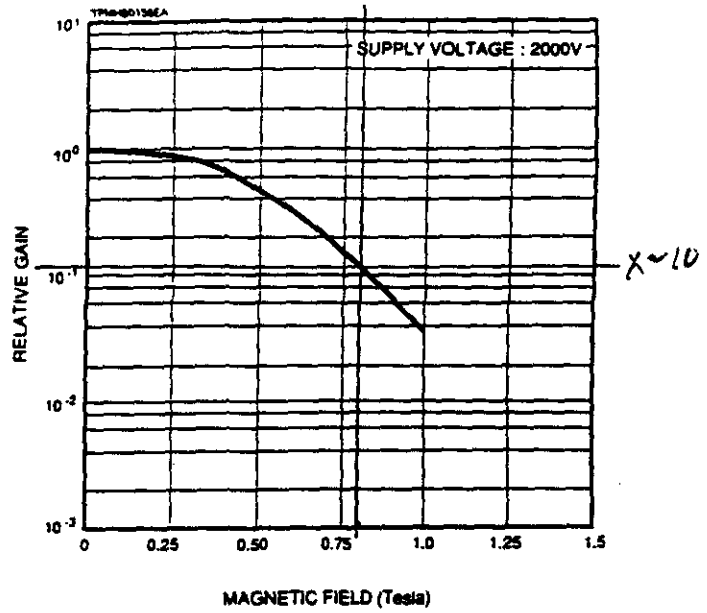

0 Tesla gain ≃ 5×10^5
1 Tesla gain ≃ 2×10^4

Figure 3: Dimensional Outline and Basing Diagram (Unit:mm)

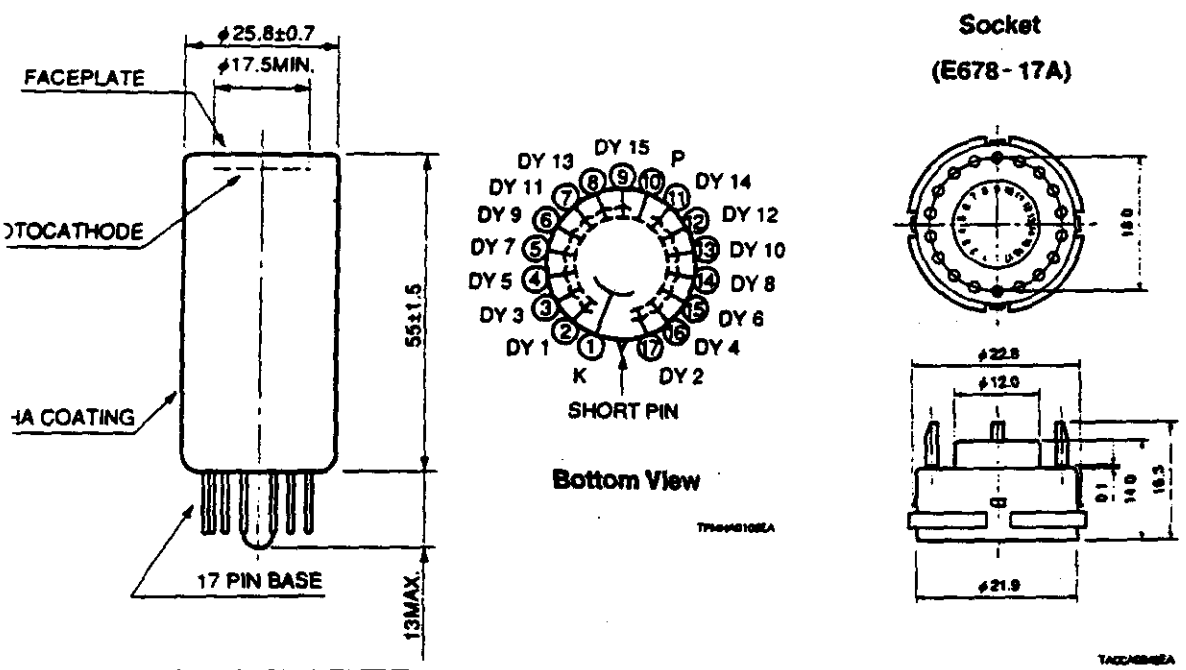

HAMAMATSU
HAMAMATSU PHOTONICS K.K., Electron Tube Center
Hamamatsu-mokanzo, Toyooka-village, Iwata-gun, Shizuoka-ken, 438-01 Japan, Telephone:0539/62-5248, Fax:0539/62-2205 Telex:4289-625
Hamamatsu Corporation: 360 Foothill Road, P.O.Box 6910, Bridgewater, N.J. 08807-0910, Telephone:1-908-231-0960, Fax:1-908-231-1216
Hamamatsu Photonics Deutschland GmbH:Arzbergerstr. 10, D-82256 Herrsching am Ammersee, Telephone:49-8152-3750, Fax:49-8152-2658, Telex:527731
Hamamatsu Photonics France S.A.R.L.: Z.A. ORLYTECH-BT 523, 3, Allee Du CDT-Mouchotte, Parcy Vieille Poste, 91781 Wissous Cedex,
Telephone:33-(1)46 76 69 80, Fax:33-(1)46 76 56 67, Telex:262062
Hamamatsu Photonics UK Limited:Lough Point, 2 Gladbeck Way, Windmill Hill, Enfield, Middlesex EN2 7JA, Telephone:44-81-367-3560, Fax:44-81-367-6384, Telex:927617 Photon G
Hamamatsu Photonics Norden AB:Kanalvagen 20 6th Floor, 194 61 Upplands Vasby, Sweden, Telephone:46-760-32190, Fax:46-760-94657
Hamamatsu Photonics Italia S.R.L.:Via Monte Grappa 30, 20020 Arese, Milano,Telephone:39-(2)935 81 733, Fax:39-(2)935 81 741
Hamamatsu Photonics Espana S.L.:Calle Sabadell, 41-08191-Rubi, Barcelona, Telephone:34-3 699 65 53, Fax:34-3 699 19 66

Cat. No. TPMH1053E01
OCT. 1992 E
Printed in Japan (800)

HAMAMATSU

TECHNICAL DATA
Oct. 1992

PHOTOMULTIPLIER TUBE
R3432-01

Stable Operation in High Magnetic Fields beyond 1 Tesla
1 Inch Diameter, Proximity Photocathode and Mesh Dynodes

$ 1250 per PMT

GENERAL

Parameters		Ratings	Units
Spectral Response		300 to 650	nm
Wavelength of Maximum Response		420 ± 50	nm
Photocathode	Material	Bialkali	–
	Minimum Effective Area	17.5	mm dia.
Window	Material	Borosilicate glass	–
	Shape	Plano-plano	–
Dynode	Secondary Emitting Surface	Bialkali	–
	Structure	Proximity mesh	–
	Number of Stages	15	–
Base		17-pin glass base	–
Suitable Socket		E678-17A (supplied)	–

MAXIMUM RATINGS (Absolute Maximum Values)

Parameters		Ratings	Units
Supply Voltage	Between Anode and Cathode	2500	Vdc
	Between Anode and Last Dynode	250	Vdc
Average Anode Current		0.01	mA
Ambient Temperature		-80 to +50	℃

CHARACTERISTICS (at 25℃)

Parameters		Min.	Typ.	Max.	Units
Cathode Sensitivity	Quantum Efficiency at 420nm	–	20	–	%
	Luminous (2856K)	50	60	–	μA/lm
	Blue (CS No. 5-58 filter)	6	8	–	μA/lm-b
Anode Sensitivity	Luminous (2856K)	–	30	–	A/lm
Current Amplification	At 0 tesla	–	5.0×10^5	–	–
	At 1 tesla	–	2.0×10^4		–
Anode Dark Current (after 30min. storage in darkness)		–	10	100	nA
Time Response	Anode Pulse Rise Time	–	1.5	–	ns
	Transit Time Spread (T.T.S.)	–	0.35	–	ns

※ Anode characteristics are measured with a voltage distribution ratio shown below.

VOLTAGE DISTRIBUTION RATIO AND SUPPLY VOLTAGE

Electrodes	K	Dy1	Dy2	Dy3	Dy4	Dy5	Dy6	·····	Dy15	P
Ratio	2	1	1	1	1	1	·····		1	1

Supply Voltage : 2000Vdc, K : Cathode, Dy : Dynode, P : Anode

※ R4722 (UV window) is also available.

Information furnished by HAMAMATSU is believed to be reliable. However, no responsibility is assumed for possible inaccuracies or ommissions. Specifications are subjected to change without notice. No patent rights are granted to any of the circuits described herein.

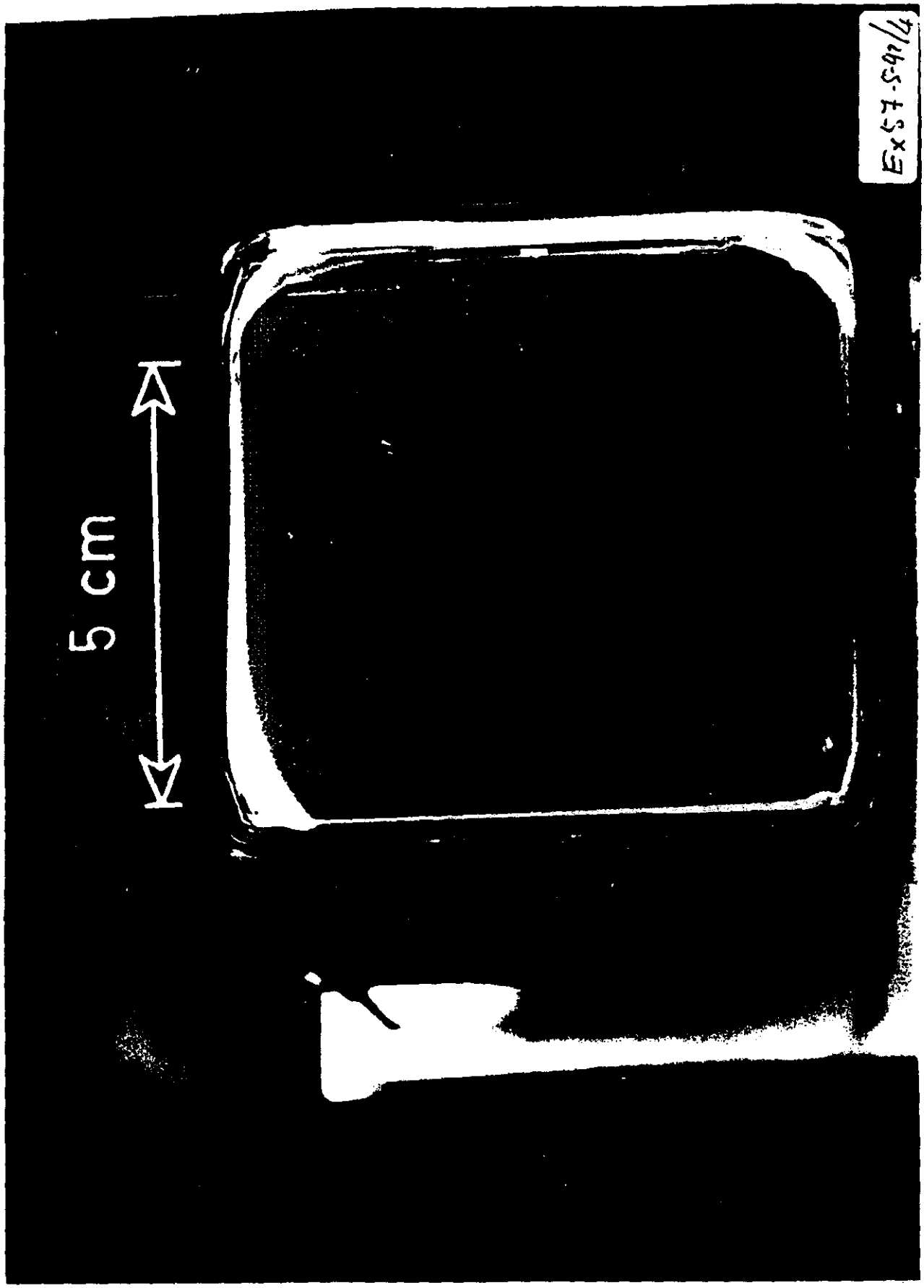
5 cm
Ex57-S42/4

Microchannel Plate

(a) R2809U(MCP)

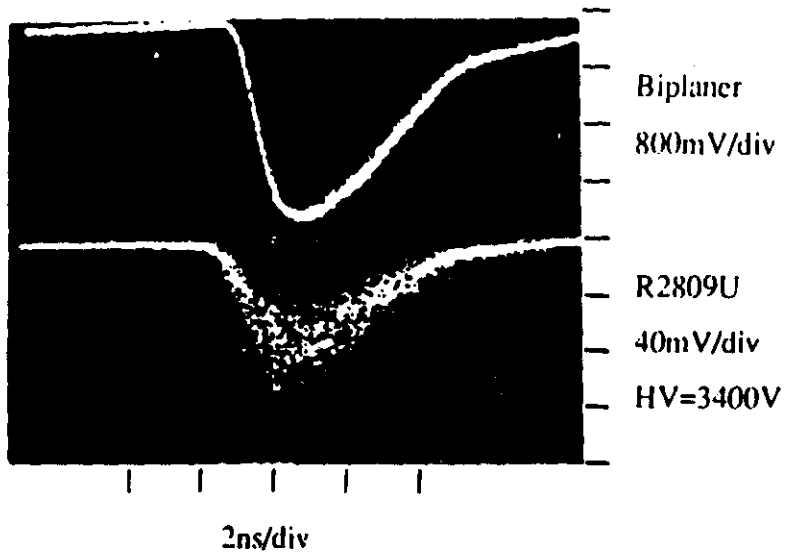

- Higher rise-time jitter but faster rise-time (sensitive to scintillation process)
- long term stability & lifetime not studied
- high rate maybe a problem
- $\sigma_{TTS} \simeq 30$ ps

Fine Mesh

(b) R2490-05(FM)

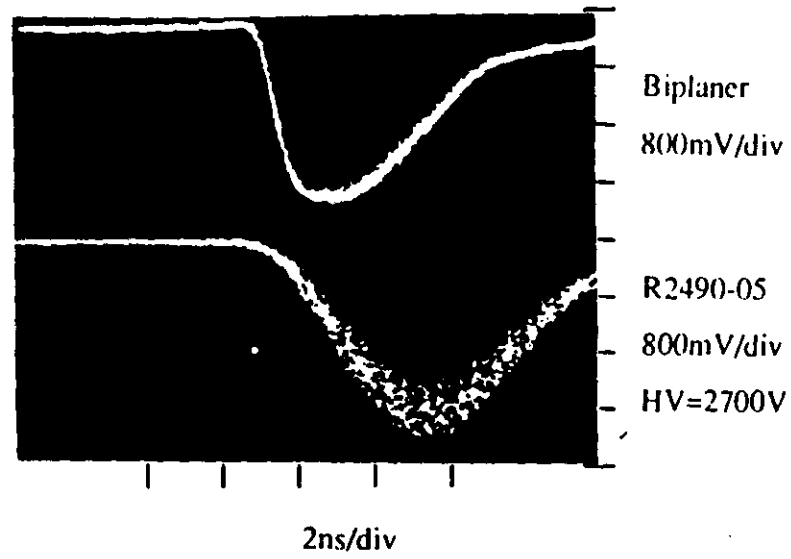

- slower rise-time (~2-3 ns)
- larger pulse
- $\sigma_{TTS} \simeq 100-150$ ps 1 Tesla

gem

γeμ

Presentation by:

E. Tarkovsky
ITEP/ORNL

E. TARKOVSKY
ITEP/ORNL

LIGHT COLLECTION IN BARREL SCI CAL

Size of tiles is approximately 9 x 50-80 sq.cm to match segmentation in Liquid Barrel Calorimeter ($\Delta\eta \times \Delta\varphi = 0.16 \times 0.16$) (6 tiles)

Question to be answered

1. How thick have to be tiles to have high efficiency (number of photoelectrons/MIP)?
2. How uniform is the response over all the tile area?
3. If WLSF readout - how many fibers per tile, haw arrange fibers to tile?

2 variants of coupling of WLSF fibers to tile have been considered:

1) at side facets,
2) at top facet

The advantages of the second method are:

1) Less dead space at the edges of a tile.
2) One can use one tile per physical tower (increasing number of fibers).
3) Fibers distributed more uniformly over the area.

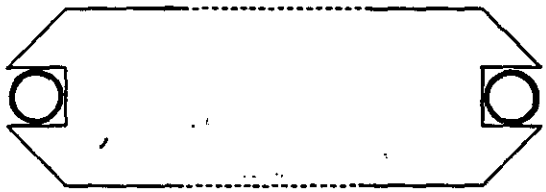

CONFIGURATION #1

CONFIGURATION #2

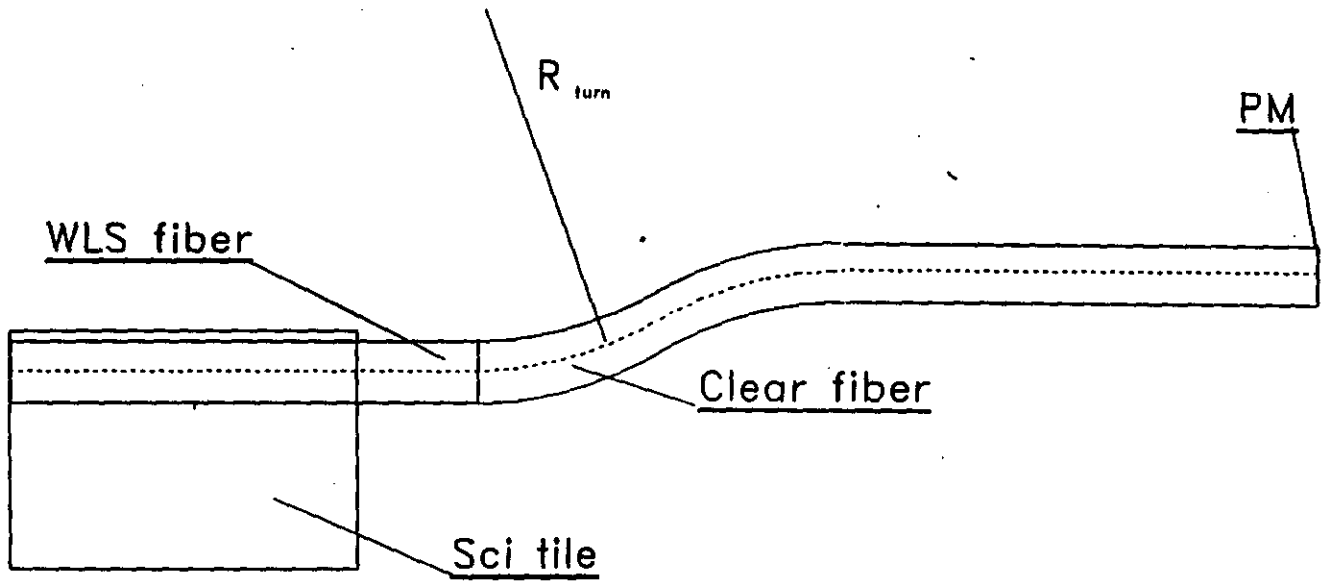
R turn
PM
WLS fiber
Clear fiber
Sci tile

1.Ionization losses in media (dE/dx).

2.Scintilator efficiency (dE/dN_{photon}).

3.Up to 3 components of emitted light with relative weights and different emission time constants.

4.Spectral light absorption in scintillator, in the core and cladding of WLS and clear (transport) fiber.

5.Spectral light reemission in WLSF.

6.Absorption at different surfaces.

7.Secular and diffuse reflection of painted and mirror surfaces.

8.Reflection/refraction at the boundary of two transparent media

9.Light propagation through WLSF and clear fibers.

10.Response of the PMT photocathodes.

11.Time development of light propagation.

Light Collection in Barrel Sci Tiles
Materials

1. Plastic scintillator BC-412
   - light output - 60% of anthracene
   - decay time - 3.3 ns
   - refraction index - 1.58
   - light attenuation length - 50 cm
2. WLS fiber BCF-91A (400 ppm dye concentration)
   - decay time - 12 ns
   - core refraction index - 1.58
   - cladding refraction index - 1.49
3. Clear fiber BCF-28
   - core refraction index - 1.58
   - cladding refraction index - 1.49
4. The green extended photocathode was used as photodetector
   q.e. = 66 mA/W @ 525 nm

E.Tarkovsky/ORNL/02-02-93

Scintillating tiles with WLS fiber

Spectral properties of materials

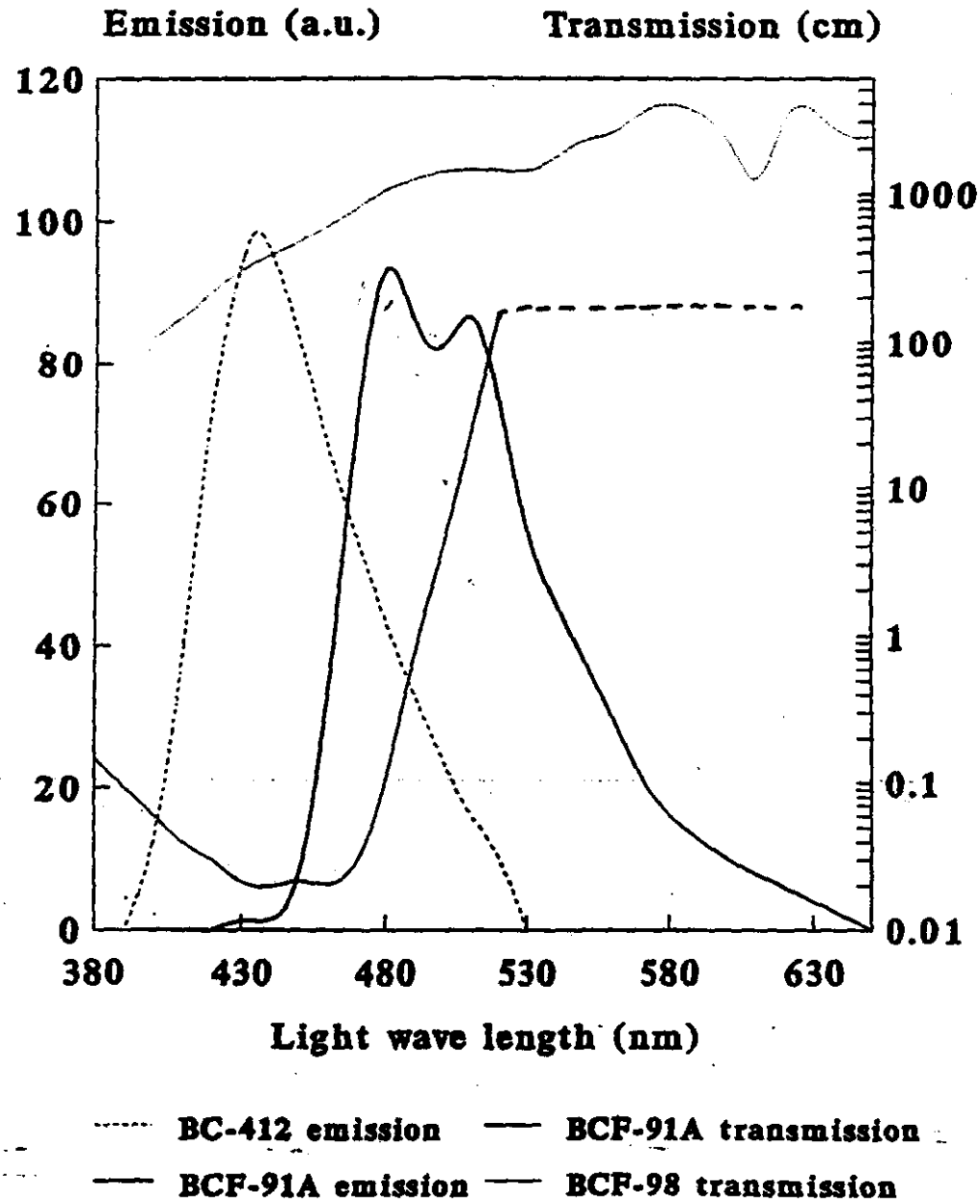

E.Tarkovski/ORNL/12-01-92

Geometry description	Glue in grooves	Efficiency (%)	Transversal nonuniformity R.M.S.(%)
tile: 50 * 9 * 0.6 cm^3, configuration # 1	yes	1.10	7.9
tile: 50 * 9 * 0.6 cm^3, configuration # 1	no	0.60	13.9
tile: 50 * 9 * 0.6 cm^3, 2 fibers in configuration # 2	yes	1.20	3.2
tile: 50 * 9 * 0.6 cm^3, 2 fibers in configuration # 2	no	0.56	6.8
tile: 50 * 9 * 0.6 cm^3, 1 fiber in configuration # 2	no	0.78	5.3

Table 3: *Light collection efficiency for different tile/fiber configurations*

Wrapping	Efficiency ($x10^{-2}$)	Transversal nonuniformity R.M.S.(%)
perfect aluminized mylar with 100% efficiency	1.21	3.2
aluminized mylar with 80% efficiency	0.93	4.2
aluminized mylar with 60% efficiency	0.77	3.5
aluminized mylar with 40% efficiency	0.65	4.5
aluminized mylar with 20% efficiency	0.55	3.7
aluminized mylar with 0% efficiency	0.46	4.6
white diffuse wrapping	1.15	5.4

Table 4: *Light collection efficiency for different tile wrappings. Tile size: 50 x 9 x 0.6 cm^3, 2 WLS fibers of 1 mm diameter glued in the grooves at the top of the tile. Clear fiber length is 100 cm.*

Al mirror at the WLS fiber far end	WLS fiber length (cm)	Clear fiber length (cm)	$\epsilon_{WLSF}*\epsilon_{tr}$ (%)	Longitudinal nonuniformity R.M.S.(%)
no	50	100	2.35	18.4
yes	50	100	3.58	7.0
no	65	100	2.06	12.6
yes	65	100	3.10	4.7
yes	65	200	2.91	4.3
yes	65	300	2.77	4.2
yes	65	400	2.61	4.0
yes	65	500	2.47	4.0
no	80	100	1.78	9.9
yes	80	100	2.76	3.7

Table 5: *WLS and transport fibers efficiency $\epsilon_{WLSF}*\epsilon_{tr}$ for different WLS and clear transport fiber lengths. Tile length: 50 cm.*

Photocathode	Average quantum efficiency (%)
standard bialkali	6.6
green extended	12.3
trialkali	12.6

Table 6: *Comparison of calculated quantum efficiencies of different photocathodes for the light emitted by WLS fiber of 65 cm length. Fiber glued in a tile of 50 x 9 x 0.6 cm^3 size wrapped with perfect aluminized mylar; light is transported along the 100 cm long clear fiber. Fiber diameters are 1 mm.*

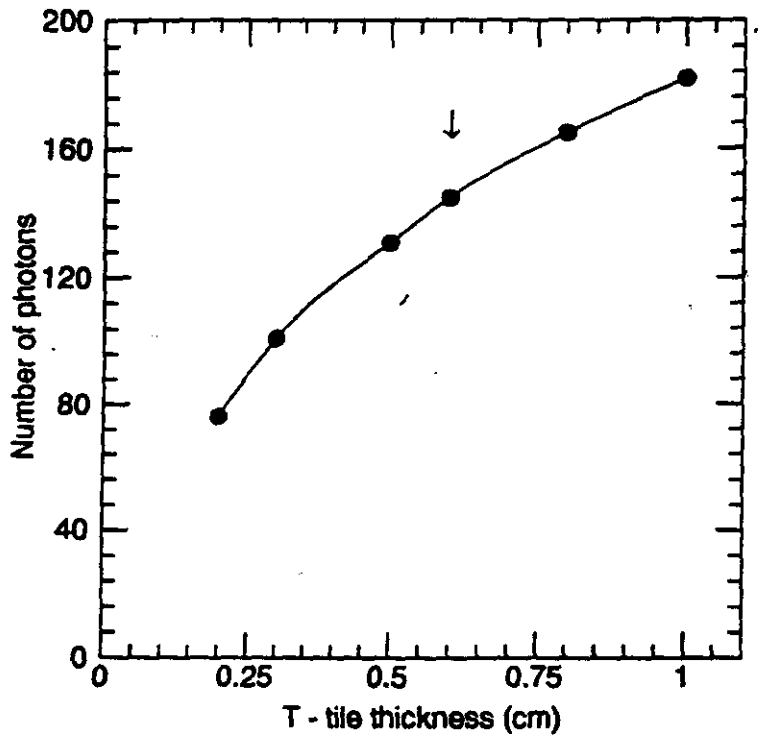

Figure 33: *Number of photons per MIP collected at photodetector vs tile thickness. Tile area size: 50 x 9 cm², 2 WLS fibers of 1 mm diameter glued in grooves, aluminized mylar wrapping, 1 m long clear fiber.*

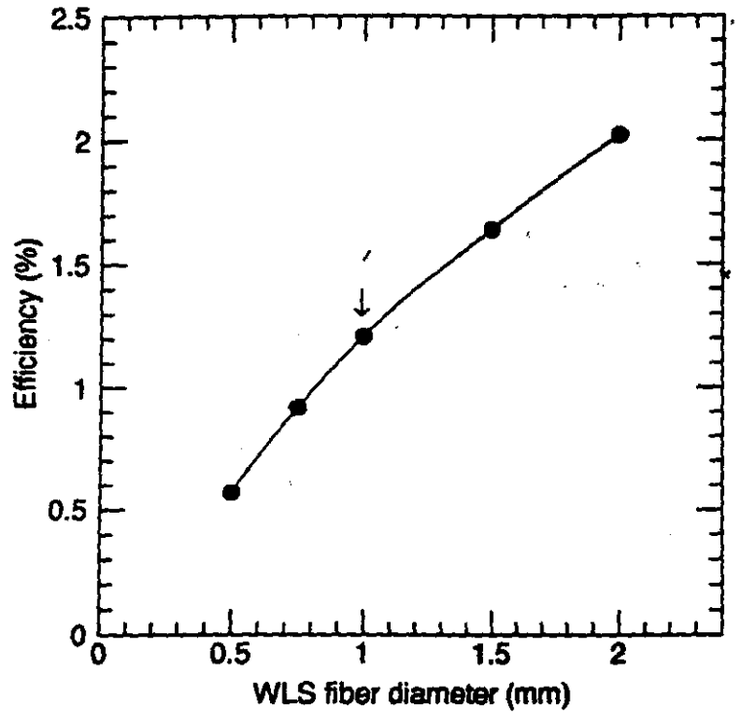

Figure 34: *Light collection efficiency vs fiber diameter. Tile size: 50 x 9 x 0.6 cm^3, 2 WLS fibers glued in grooves, aluminized mylar wrapping, 1 m long clear fiber.*

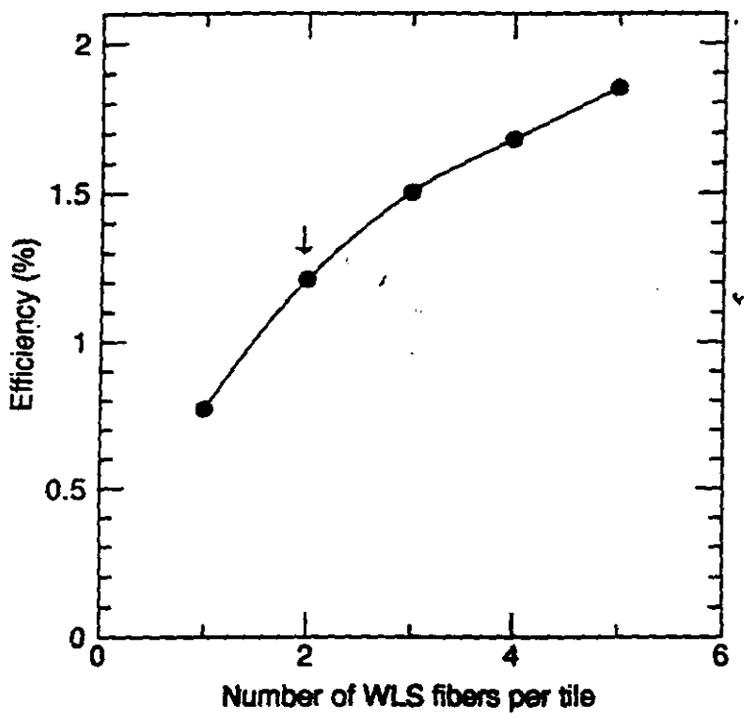

Figure 35: *Light collection efficiency vs number of WLS fibers. Tile size: 50 x 9 x 0.6 cm^3, WLS fibers of 1 mm diameter glued in grooves, aluminized mylar wrapping, .1 m long clear fiber.*

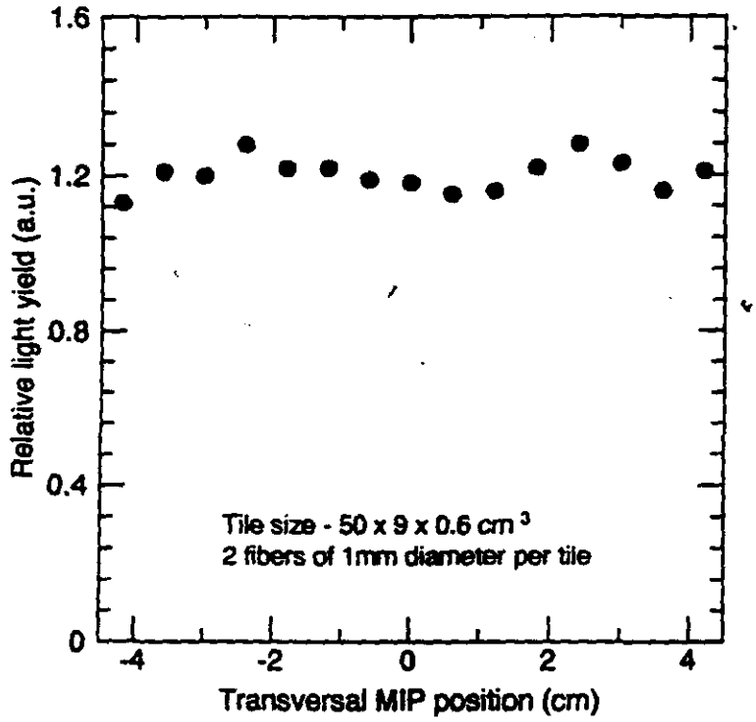

Figure 36: *Transversal nonuniformity of tile response for 2 fiber readout. Tile size: 50 x 9 x 0.6 cm³, WLS fibers of 1 mm diameter glued in grooves, aluminized mylar wrapping, 1 m long clear fiber.*

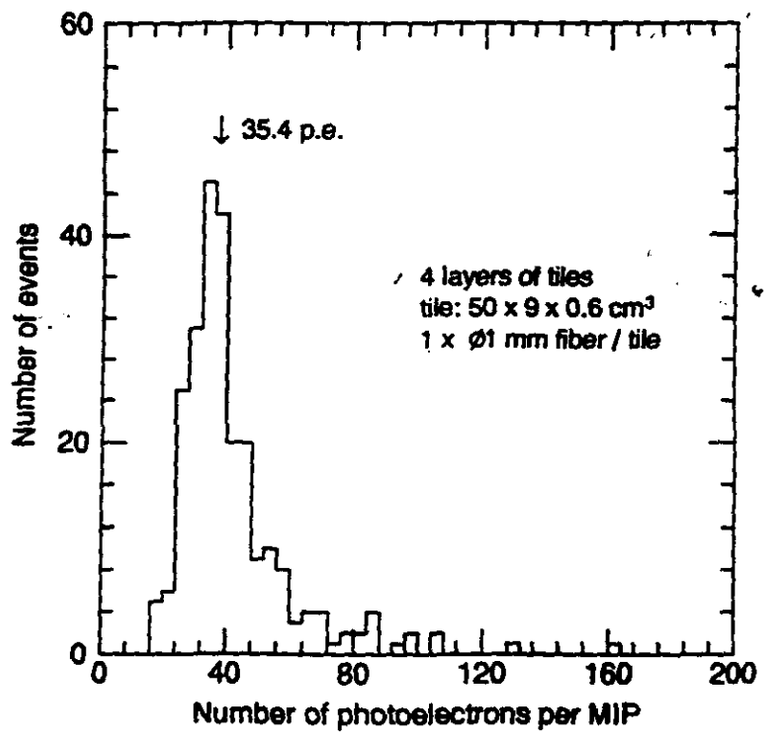

Figure 37: *Response of 4 layer tower to 50 GeV/c muons with 1 glued in WLS fiber of 1 mm dia.*

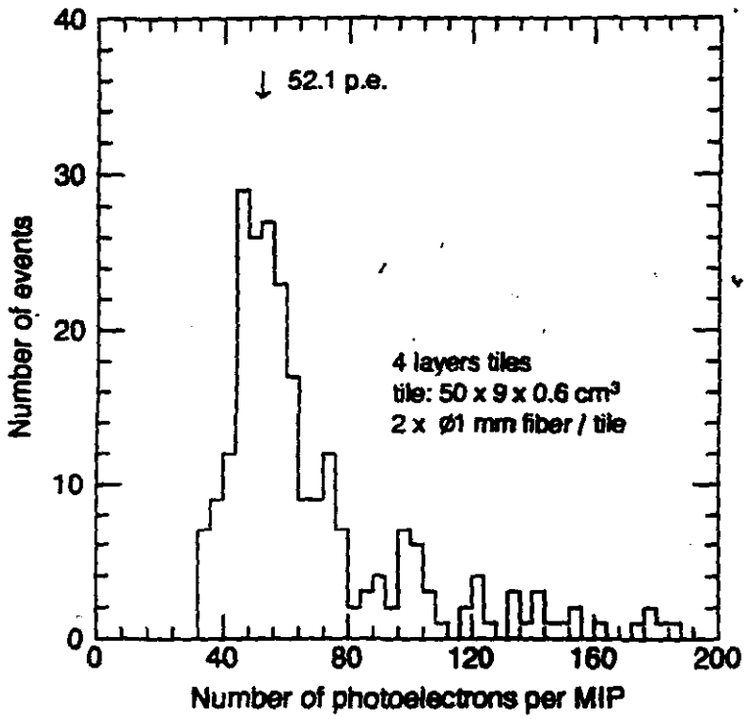

Figure 38: *Response of 4 layer tower to 50 GeV/c muons with 2 glued in WLS fibers of 1 mm dia.*

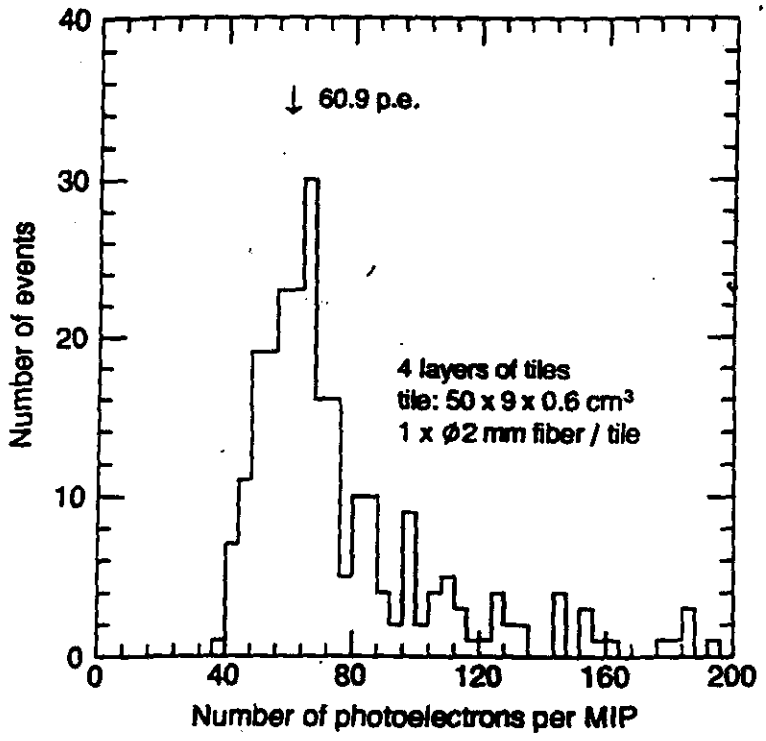

Figure 40: *Response of 4 layer tower to 50 GeV/c muons with 1 WLS fiber of 2 mm dia glued in.*

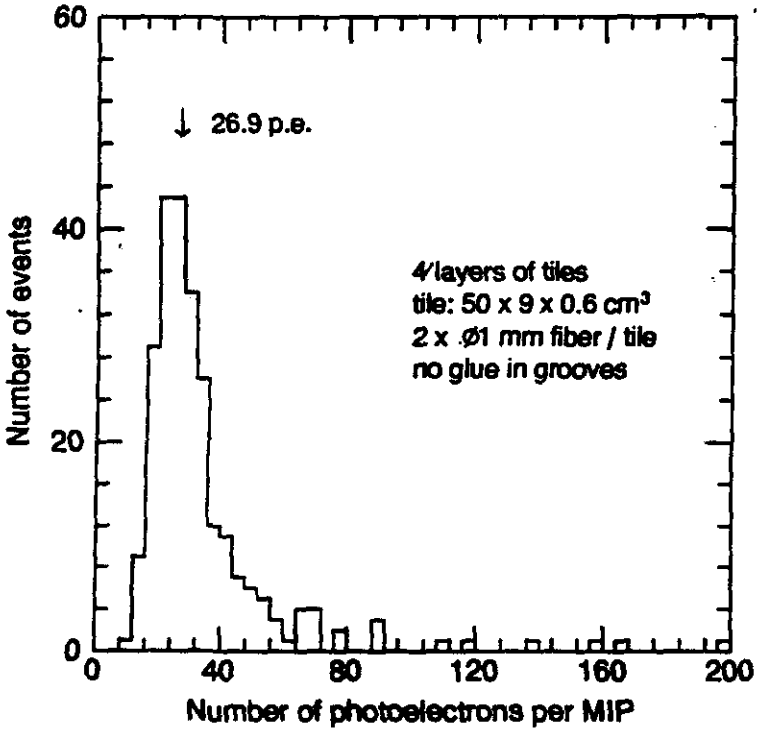

Figure 39: *Response of 4 layer tower to 50 GeV/c muons with 2 not glued in WLS fibers of 1 mm dia.*

Tile/fiber geometry	Average response (p.e./μ)	Arrival time r.m.s.(ns) (threshold 4 p.e.)	Total response nonuniformity (%)
1 fiber 1 mm dia glued in	44.3	1.6	7.6
2 fibers 1 mm dia glued in	77.5	1.4	4.5
1 fiber 2 mm dia glued in	79.5	1.1	7.4
2 fibers 1 mm dia not glued in	26.9	1.9	9.7

Table 7: *Results of simulation of 4 layer tower response to 50 GeV muons for different tile/fiber geometries. Tile size: 50 x 9 x 0.6 cm^3. WLS fiber length: 65 cm. Clear fiber length: 5 m.* $< \Delta E_\mu > = 6.4$ *MeV.*

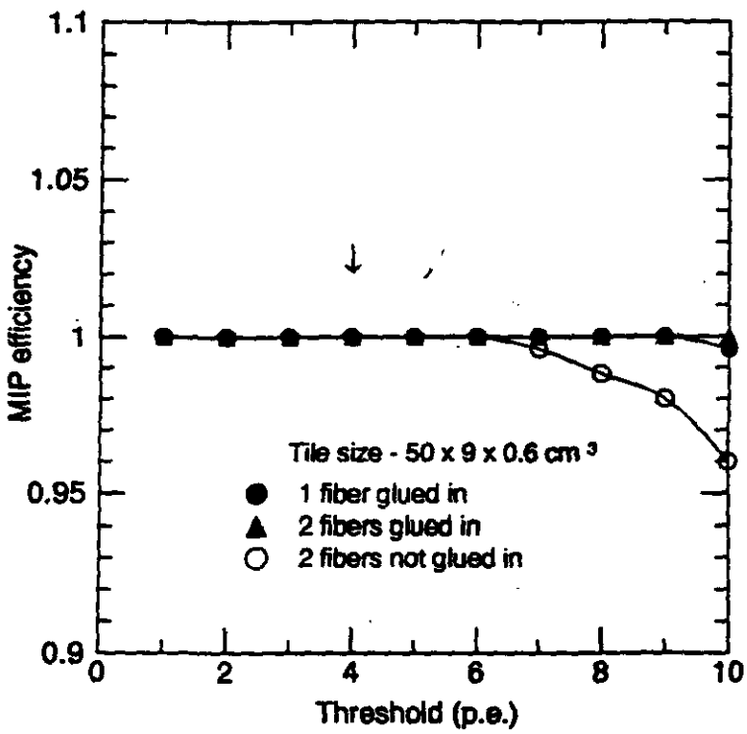

Figure 41: *Efficiency of MIP registration vs threshold. for different readout schemes from 4 layer tower.*

IN ORDER TO ESTIMATE THE RELIABILITY OF LTRANS WE SIMULATE CEBAF SETUP.

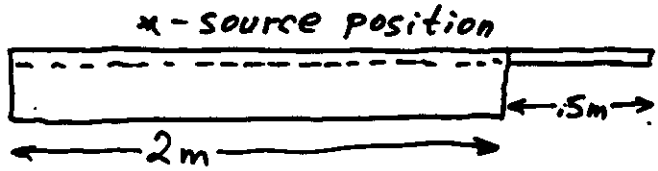

BC-408 scintillator $200 \times 10 \times 1\ cm^3$

5 BCF-91A FIBERS Ø 2mm., 2.5m Long

Far ends of fibers were blackened.

They measured 5.6 p.e /MeV - response without glue.

LTRANS gives 5.5 p.e /MeV.

glue/no glue ratio measurement - 1.85
simulation - 1.88

gem

γeμ

Presentation by:

B. Wisniewski
SSC Laboratory

GEM DETECTOR LAYOUT

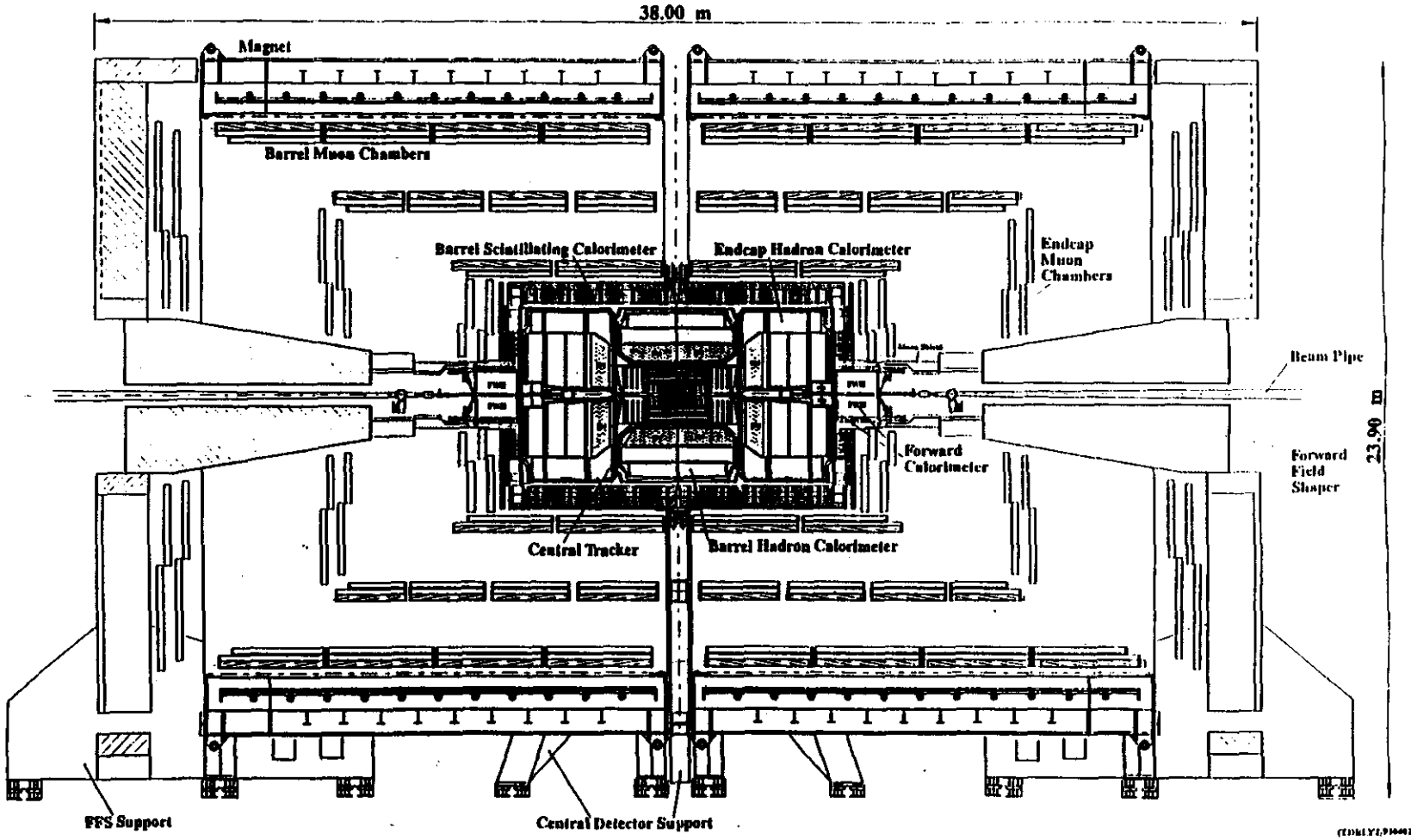

Schedule/Milestones

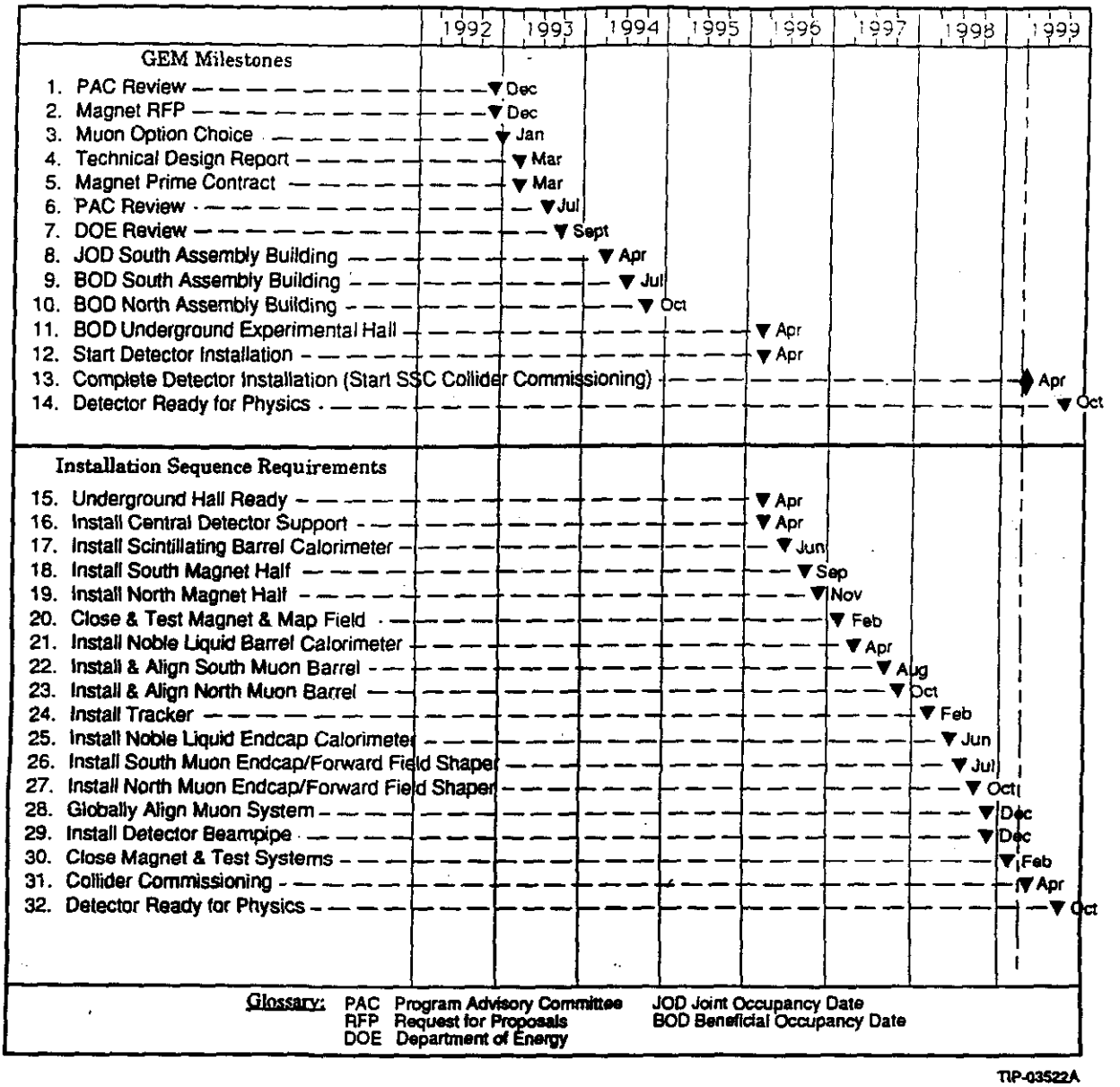

TIP-03522A

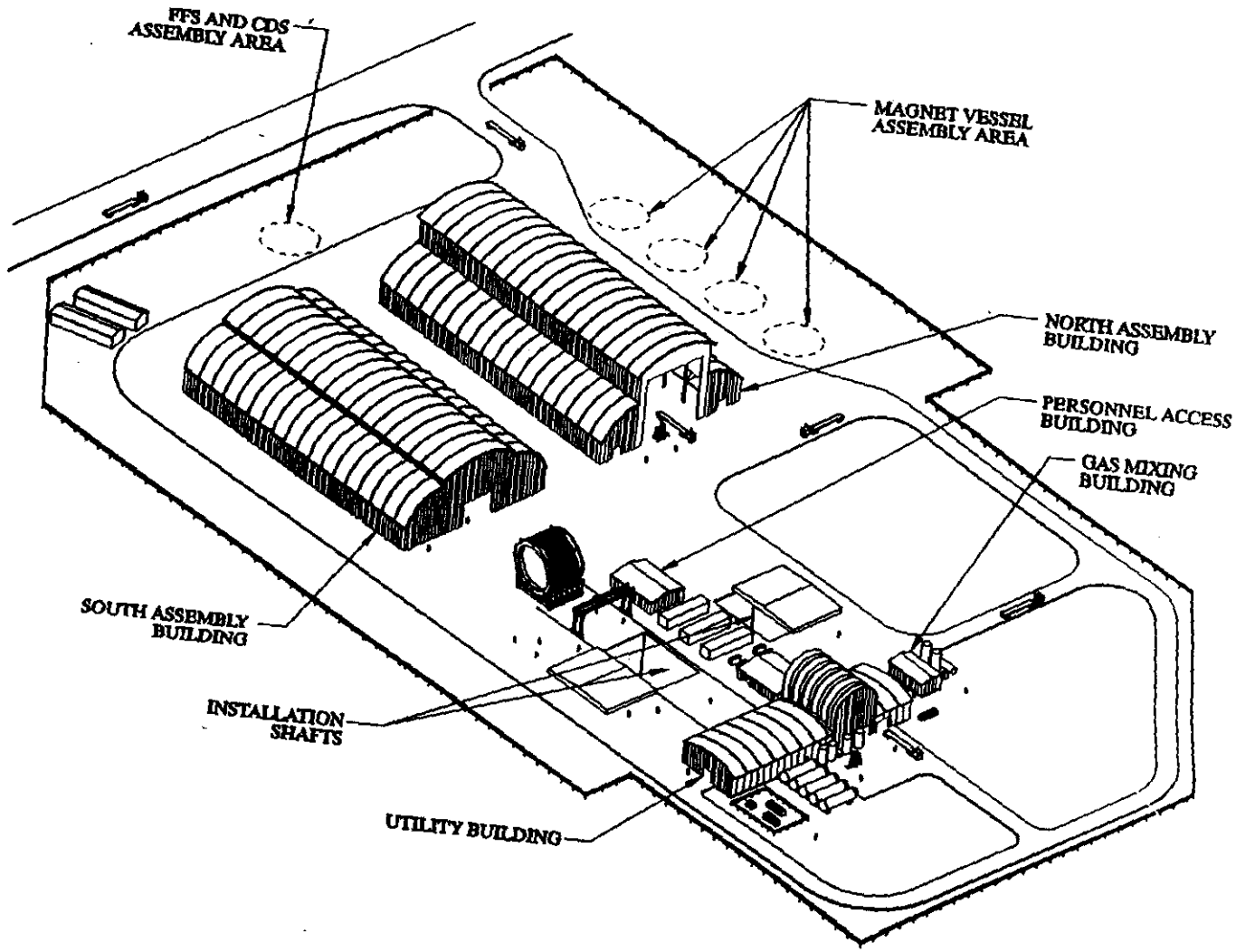
FFS AND CDS ASSEMBLY AREA
MAGNET VESSEL ASSEMBLY AREA
NORTH ASSEMBLY BUILDING
PERSONNEL ACCESS BUILDING
GAS MIXING BUILDING
SOUTH ASSEMBLY BUILDING
INSTALLATION SHAFTS
UTILITY BUILDING

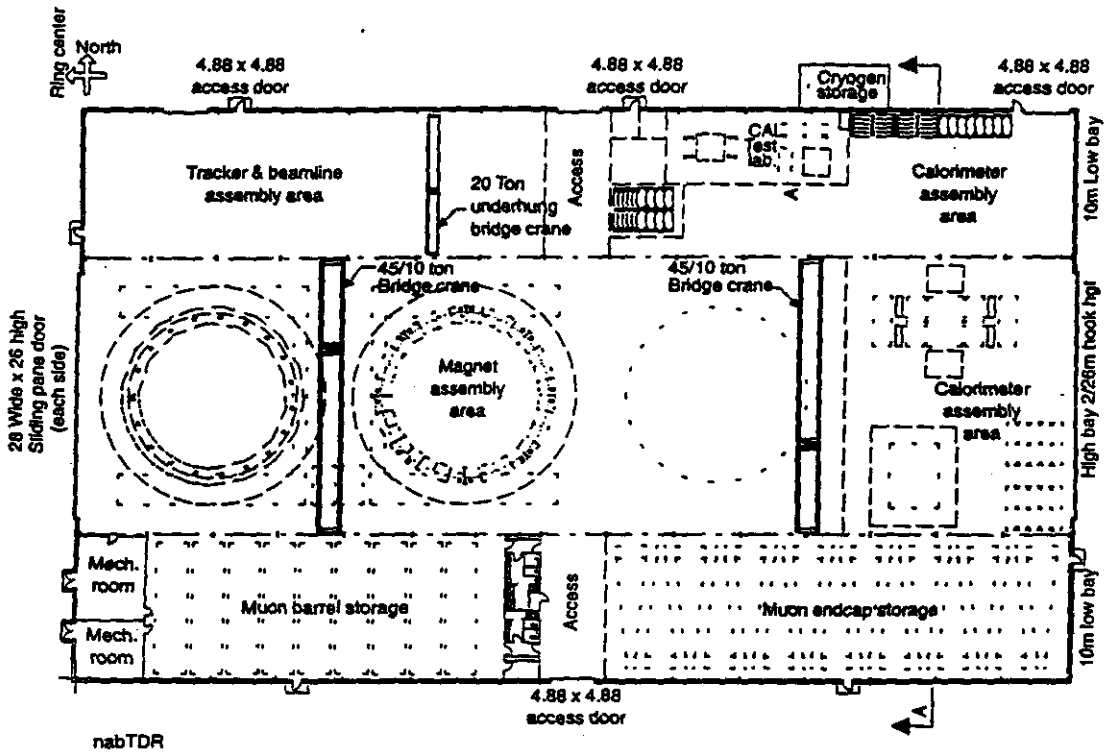
Ring center
North
4.88 x 4.88
access door
4.88 x 4.88
access door
Cryogen
storage
4.88 x 4.88
access door
Tracker & beamline
assembly area
20 Ton
underhung
bridge crane
Access
CAL
test
lab
A
Calorimeter
assembly
area
10m Low bay
28 Wide x 26 high
Sliding pane door
(each side)
45/10 ton
Bridge crane
Magnet
assembly
area
45/10 ton
Bridge crane
Calorimeter
assembly
area
High bay 2/26m hook hgt
Mech.
room
Mech.
room
Muon barrel storage
Access
Muon endcap storage
10m low bay
4.88 x 4.88
access door
A
nabTDR

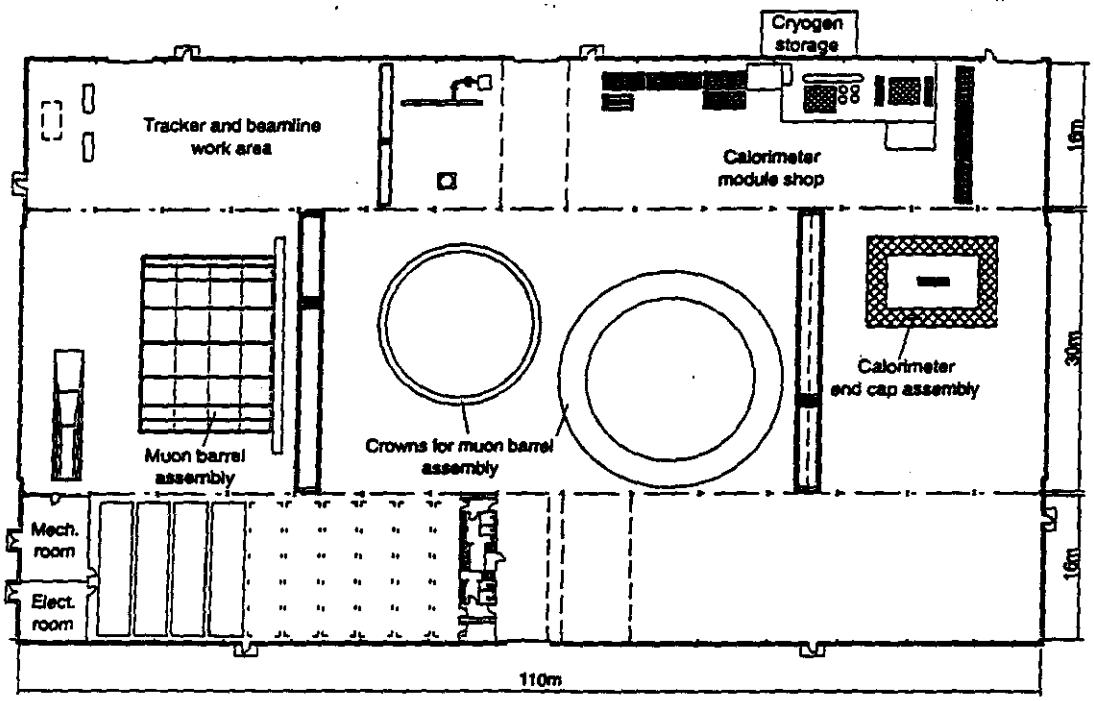
Cryogen storage
Tracker and beamline work area
Calorimeter module shop
16m
30m
16m
Calorimeter end cap assembly
Muon barrel assembly
Crowns for muon barrel assembly
Mech. room
Elect. room
110m

TDRnab1

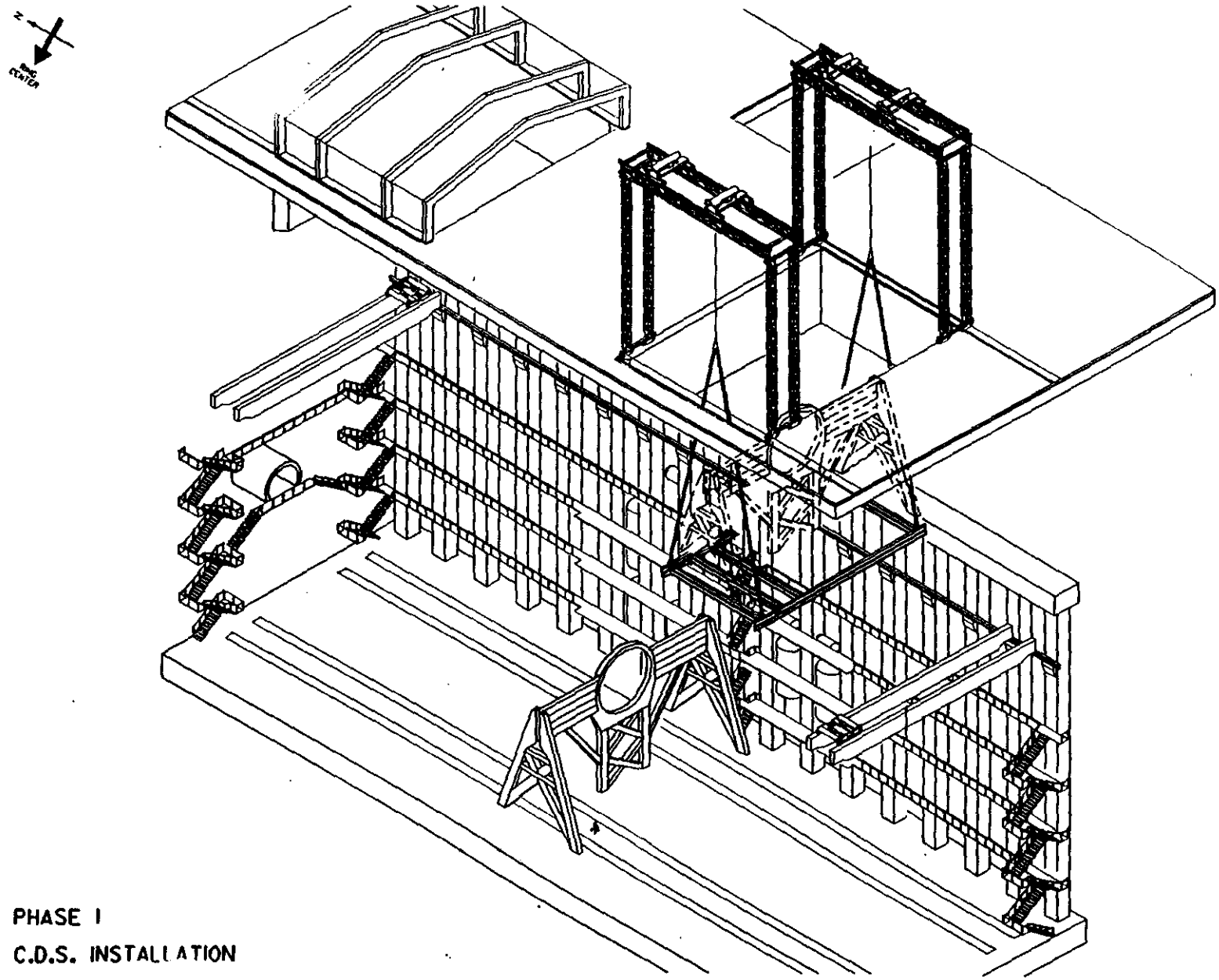

PHASE I

C.D.S. INSTALLATION

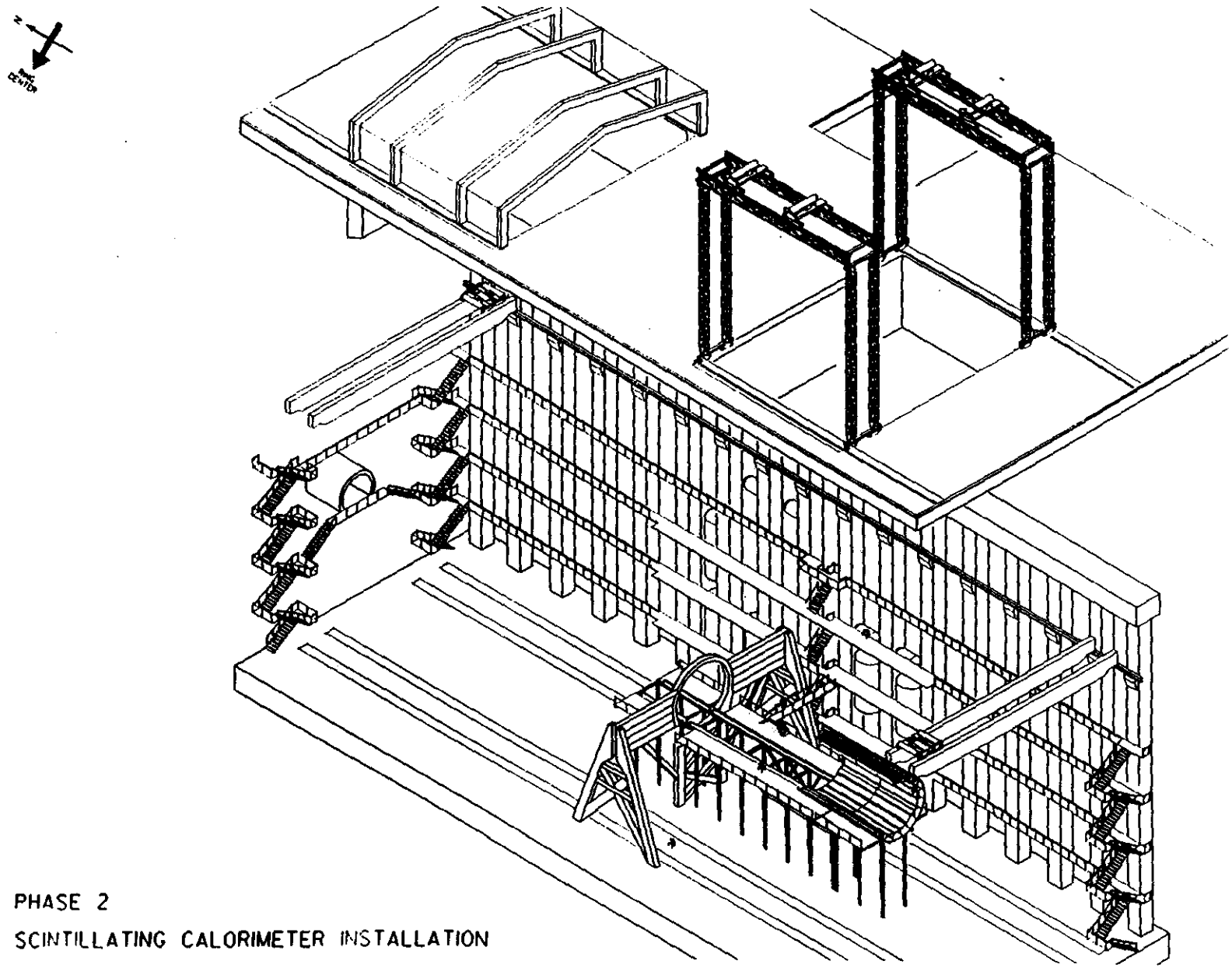

PHASE 2

SCINTILLATING CALORIMETER INSTALLATION

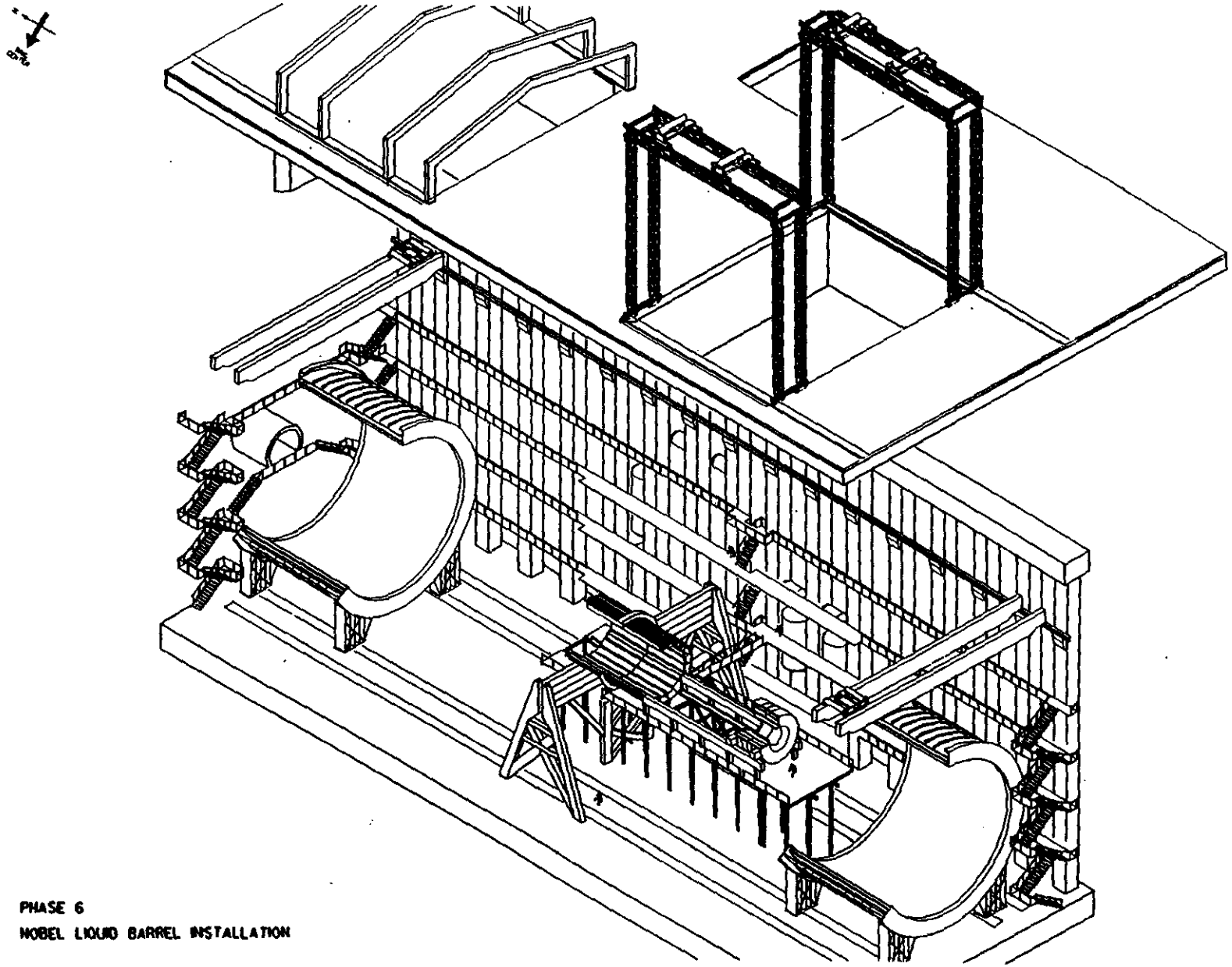

PHASE 6
NOBEL LIQUID BARREL INSTALLATION

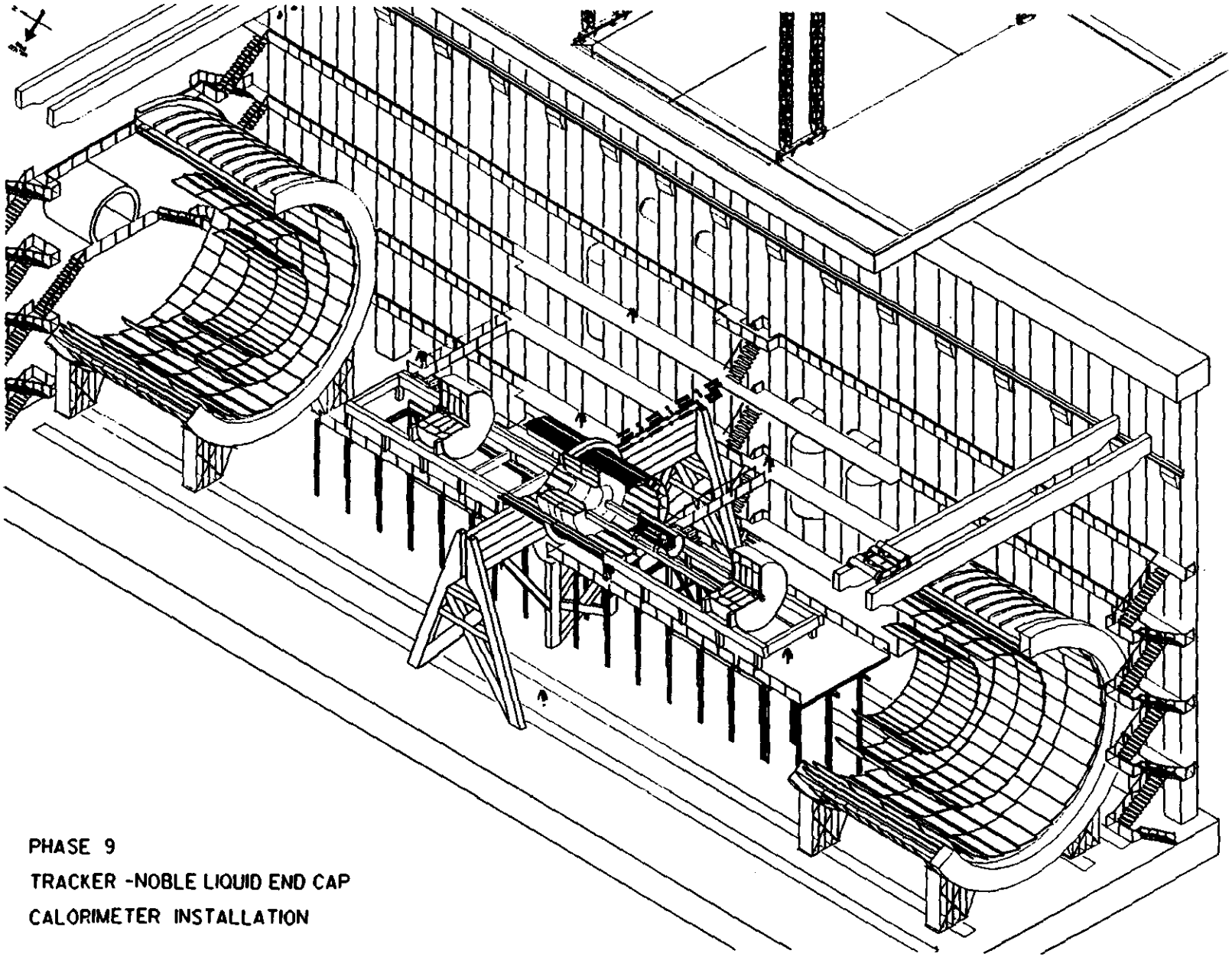

PHASE 9
TRACKER -NOBLE LIQUID END CAP
CALORIMETER INSTALLATION

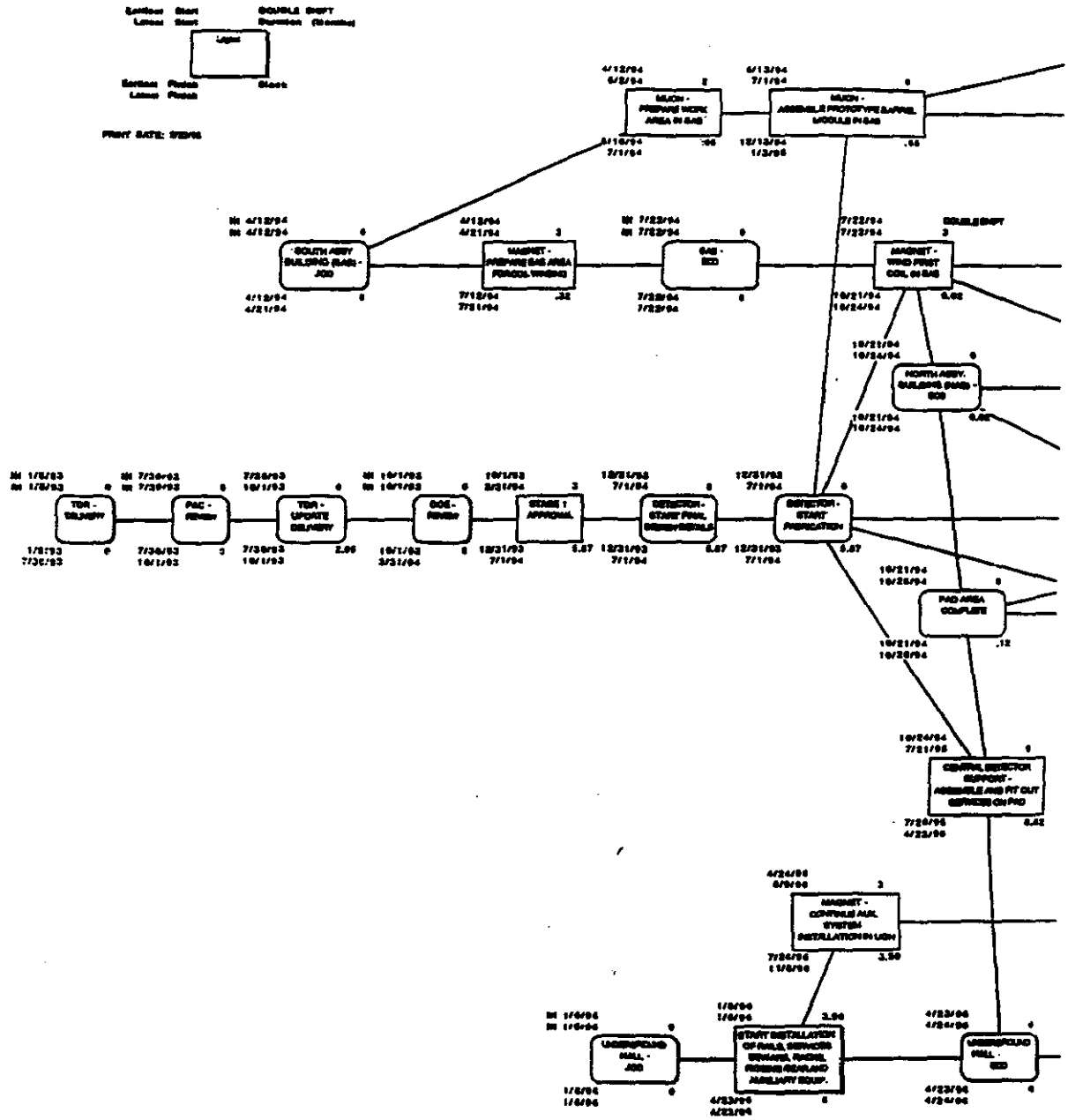
TDR - DELIVERY
PAC - REVIEW
TDR - UPDATE DELIVERY
DOE - REVIEW
STAGE 1 APPROVAL
DETECTOR - START FABRICATION
SOUTH ABSY BUILDING (SAB) - JOD
MAGNET - WIND FIRST COIL IN SAB
NORTH ABSY. BUILDING (SAB) - EOD
PAD AREA COMPLETE
MAGNET - CONTROLS AUX. SYSTEM INSTALLATION IN UGH
UNDERGROUND HALL - JOD
UNDERGROUND HALL - EOD

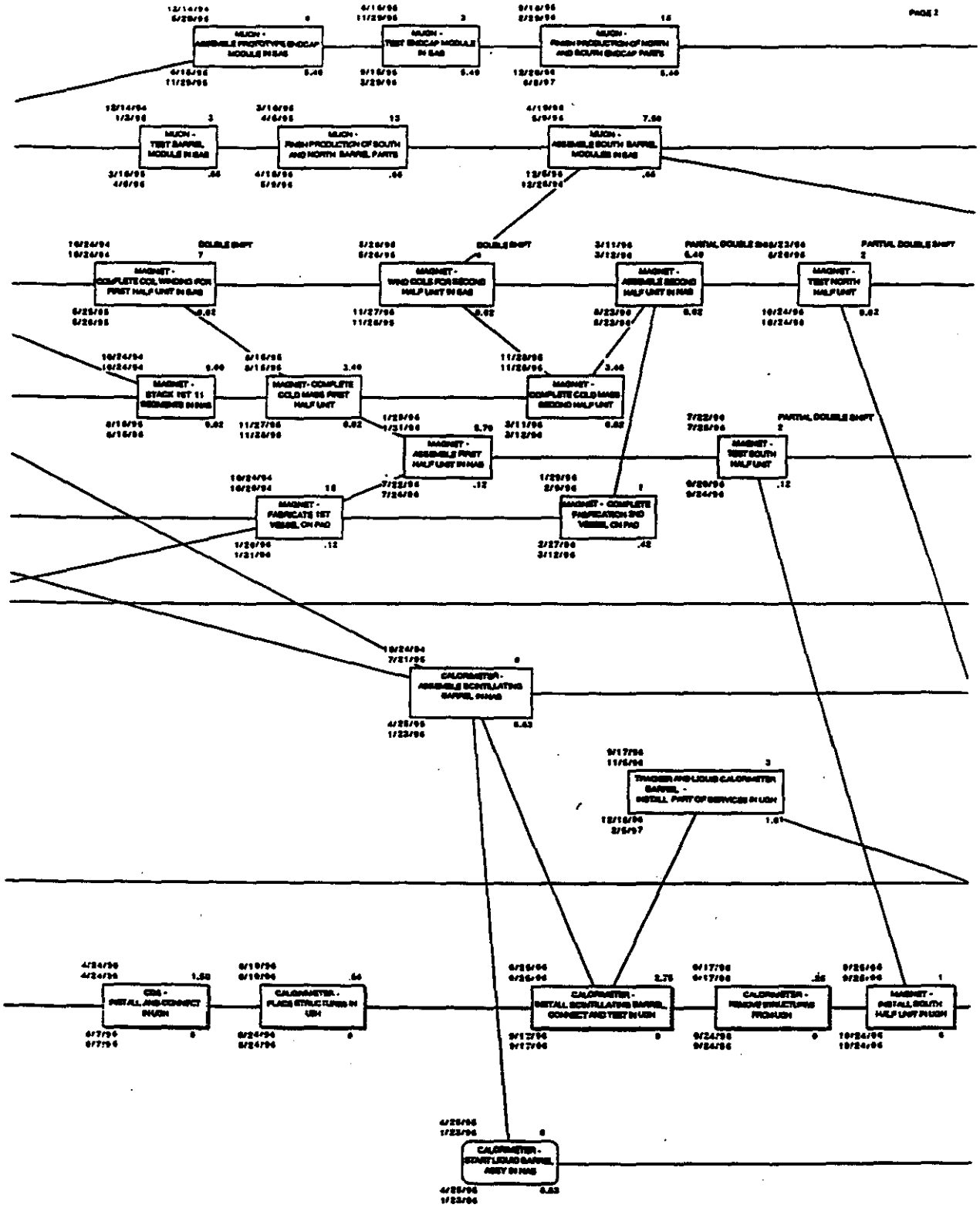
PAGE 2
MUON - ASSEMBLE PROTOTYPE ENDCAP MODULE IN SAS
MUON - TEST ENDCAP MODULE IN SAS
MUON - FINISH PRODUCTION OF NORTH AND SOUTH ENDCAP PARTS
MUON - TEST BARREL MODULE IN SAS
MUON - FINISH PRODUCTION OF SOUTH AND NORTH BARREL PARTS
MUON - ASSEMBLE SOUTH BARREL MODULES IN SAS
MAGNET - COMPLETE COIL WINDING FOR FIRST HALF UNIT IN SAS
MAGNET - WIND COILS FOR SECOND HALF UNIT IN SAS
MAGNET - ASSEMBLE SECOND HALF UNIT IN HAS
MAGNET - TEST NORTH HALF UNIT
MAGNET - STACK 1ST 11 SEGMENTS IN HAS
MAGNET - COMPLETE COLD MASS FIRST HALF UNIT
MAGNET - COMPLETE COLD MASS SECOND HALF UNIT
MAGNET - ASSEMBLE FIRST HALF UNIT IN HAS
MAGNET - TEST SOUTH HALF UNIT
MAGNET - FABRICATE 1ST VESSEL ON PAD
MAGNET - COMPLETE FABRICATION 2ND VESSEL ON PAD
CALORIMETER - ASSEMBLE SCINTILLATING BARREL IN HAS
THICKER AND LIQUID CALORIMETER BARREL - INSTALL PART OF SERVICES IN UGH
CDM - INSTALL AND CONNECT IN UGH
CALORIMETER - PLACE STRUCTURES IN UGH
CALORIMETER - INSTALL SCINTILLATING BARREL, CONNECT AND TEST IN UGH
CALORIMETER - REMOVE STRUCTURES FROM UGH
MAGNET - INSTALL SOUTH HALF UNIT IN UGH
CALORIMETER - START LIQUID BARREL ASSY IN HAS

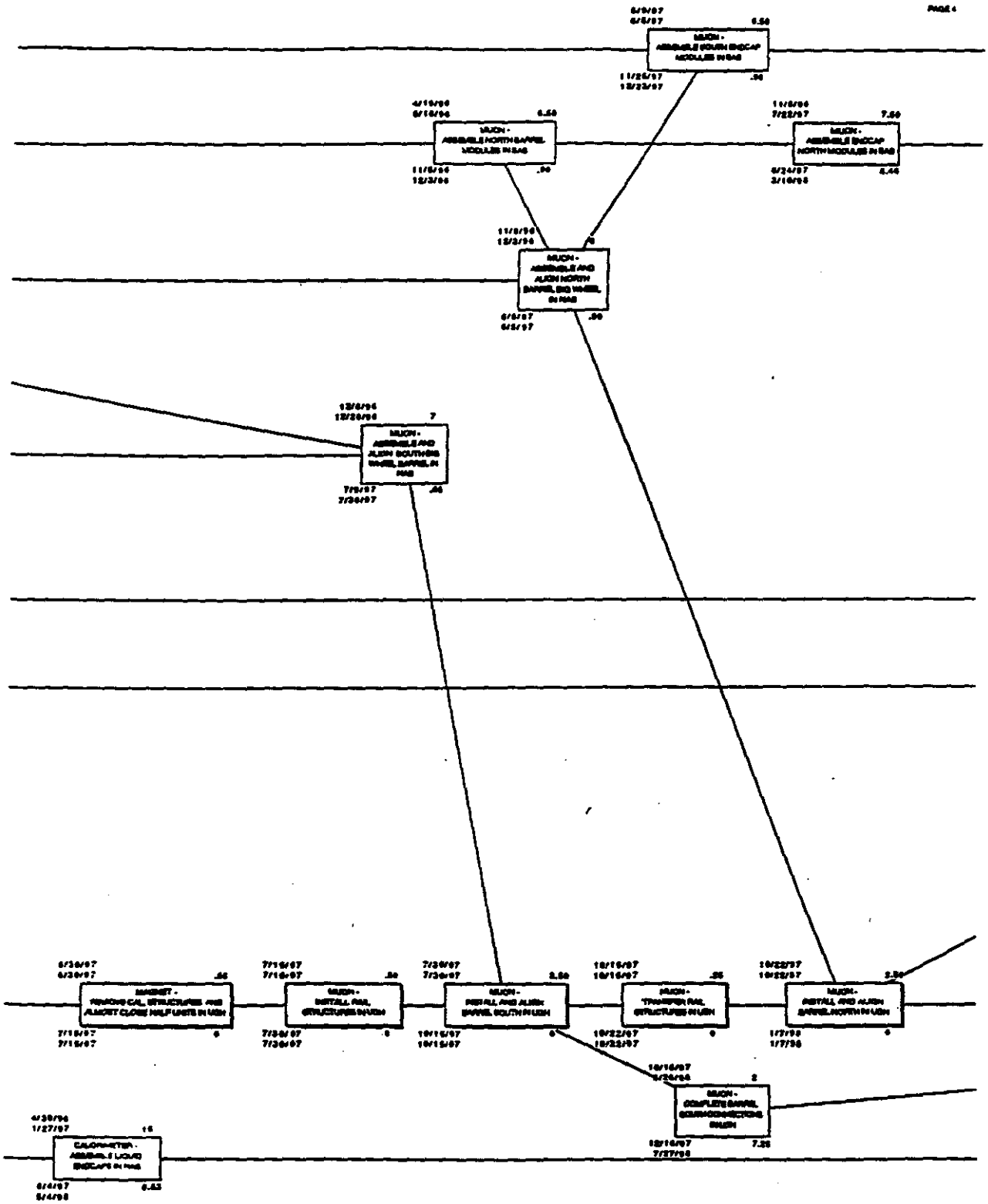
PAGE 4
MUON - ASSEMBLE NORTH BARREL MODULES IN BAS
MUON - ASSEMBLE AND ALIGN NORTH BARREL END WHEEL IN MAS
MUON - ASSEMBLE AND ALIGN SOUTH END WHEEL BARREL IN MAS
MUON - INSTALL AND ALIGN BARREL SOUTH IN UGH
MUON - INSTALL AND ALIGN BARREL NORTH IN UGH
MUON - COMPLETE BARREL INTERCONNECTIONS IN UGH
CALORIMETER - ASSEMBLE LIQUID ENDCAPS IN MAS

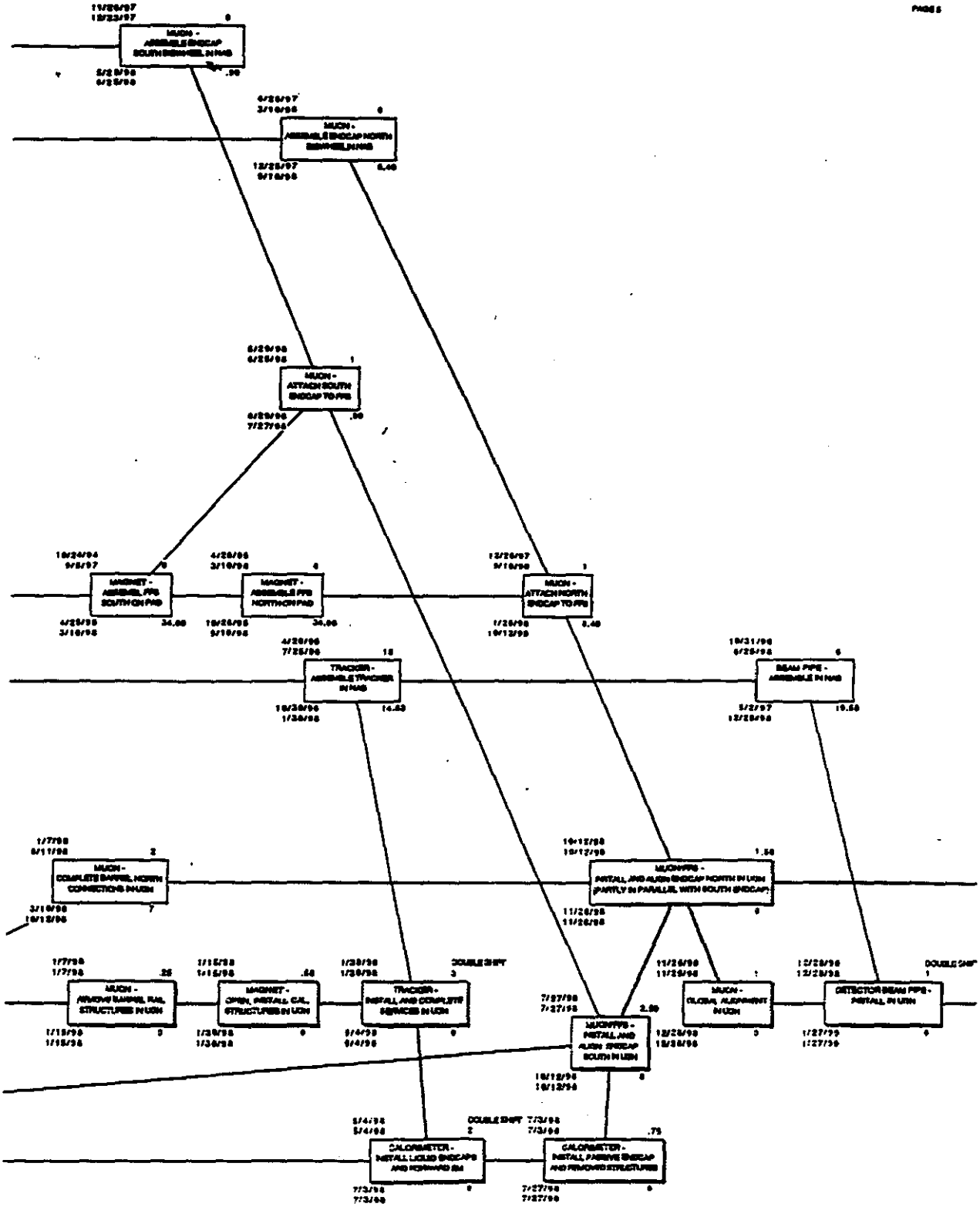
MUON - ASSEMBLE ENDCAP SOUTH BARREL IN NAB
MUON - ASSEMBLE ENDCAP NORTH BARREL IN NAB
MUON - ATTACH SOUTH ENDCAP TO PB
MAGNET - ASSEMBLE PB SOUTH ON PAD
MAGNET - ASSEMBLE PB NORTH ON PAD
MUON - ATTACH NORTH ENDCAP TO PB
TRACKER - ASSEMBLE TRACKER IN NAB
BEAM PIPE - ASSEMBLE IN NAB
MUON - COMPLETE BARREL NORTH CONNECTIONS IN UGH
MUON - INSTALL AND ALIGN ENDCAP NORTH IN UGH (PARTLY IN PARALLEL WITH SOUTH ENDCAP)
MUON - REMOVE BARREL RAIL STRUCTURES IN UGH
MAGNET - OPEN, INSTALL CAL STRUCTURES IN UGH
TRACKER - INSTALL AND COMPLETE SERVICES IN UGH
MUON - GLOBAL ALIGNMENT IN UGH
DETECTOR BEAM PIPE - INSTALL IN UGH
MUON - INSTALL AND ALIGN ENDCAP SOUTH IN UGH
CALORIMETER - INSTALL LIQUID ENDCAPS AND FORWARD EM
CALORIMETER - INSTALL PASSIVE ENDCAP AND REMOVED STRUCTURES
DOUBLE SHIFT

Superconducting
Super Collider
Laboratory

Cryogenics Group

Physics Research Division

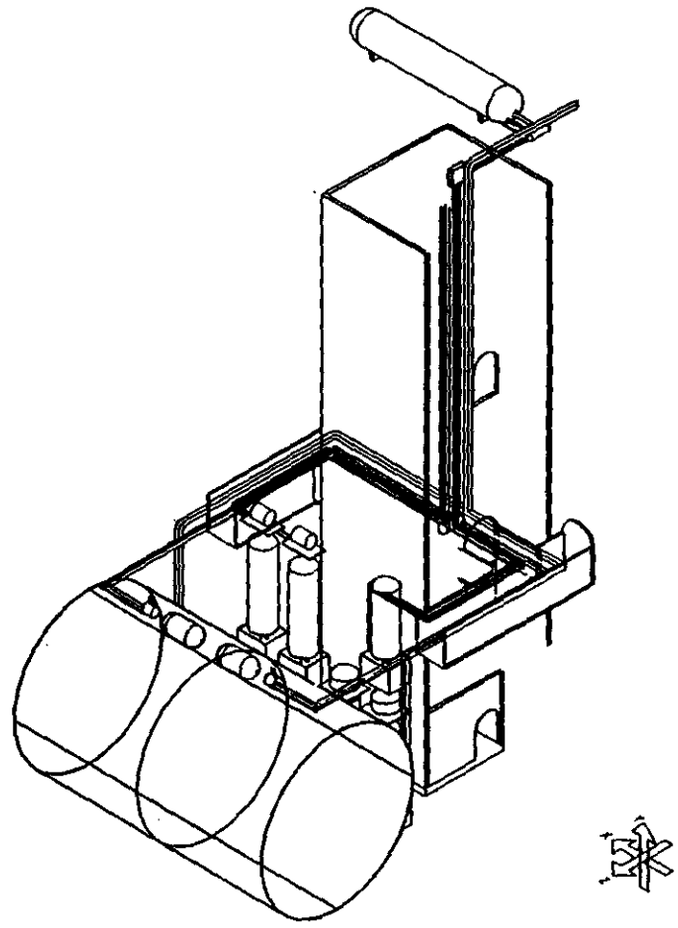

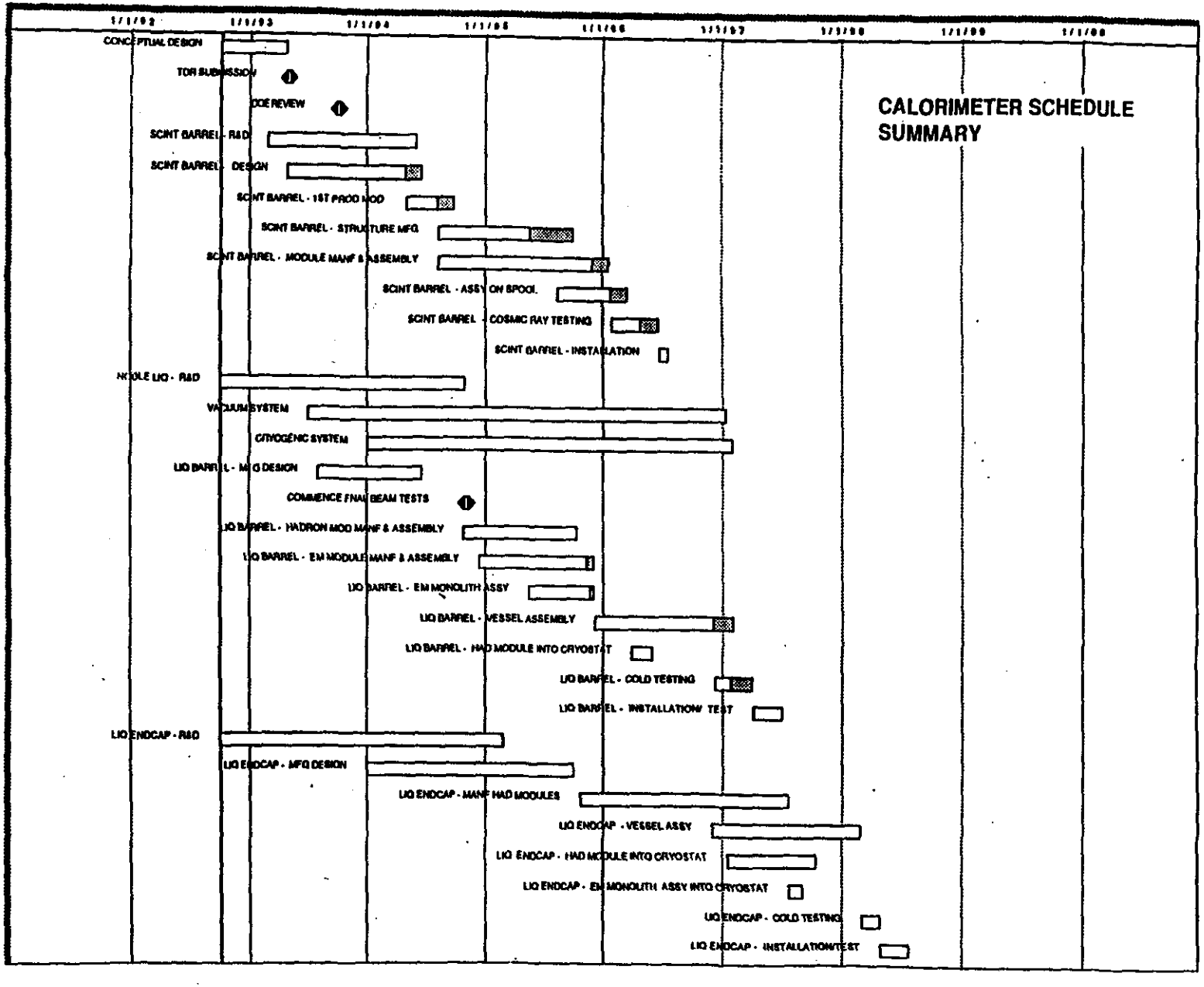
CALORIMETER SCHEDULE SUMMARY
1/1/92
1/1/93
1/1/94
1/1/95
1/1/96
1/1/97
1/1/98
1/1/99
1/1/00
CONCEPTUAL DESIGN
TDR SUBMISSION
DOE REVIEW
SCINT BARREL - R&D
SCINT BARREL - DESIGN
SCINT BARREL - 1ST PROD MOD
SCINT BARREL - STRUCTURE MFG
SCINT BARREL - MODULE MANF & ASSEMBLY
SCINT BARREL - ASSY ON SPOOL
SCINT BARREL - COSMIC RAY TESTING
SCINT BARREL - INSTALLATION
MODULE LIQ - R&D
VACUUM SYSTEM
CRYOGENIC SYSTEM
LIQ BARREL - MFG DESIGN
COMMENCE FNAL BEAM TESTS
LIQ BARREL - HADRON MOD MANF & ASSEMBLY
LIQ BARREL - EM MODULE MANF & ASSEMBLY
LIQ BARREL - EM MONOLITH ASSY
LIQ BARREL - VESSEL ASSEMBLY
LIQ BARREL - HAD MODULE INTO CRYOSTAT
LIQ BARREL - COLD TESTING
LIQ BARREL - INSTALLATION/ TEST
LIQ ENDCAP - R&D
LIQ ENDCAP - MFG DESIGN
LIQ ENDCAP - MANF HAD MODULES
LIQ ENDCAP - VESSEL ASSY
LIQ ENDCAP - HAD MODULE INTO CRYOSTAT
LIQ ENDCAP - EM MONOLITH ASSY INTO CRYOSTAT
LIQ ENDCAP - COLD TESTING
LIQ ENDCAP - INSTALLATION/TEST

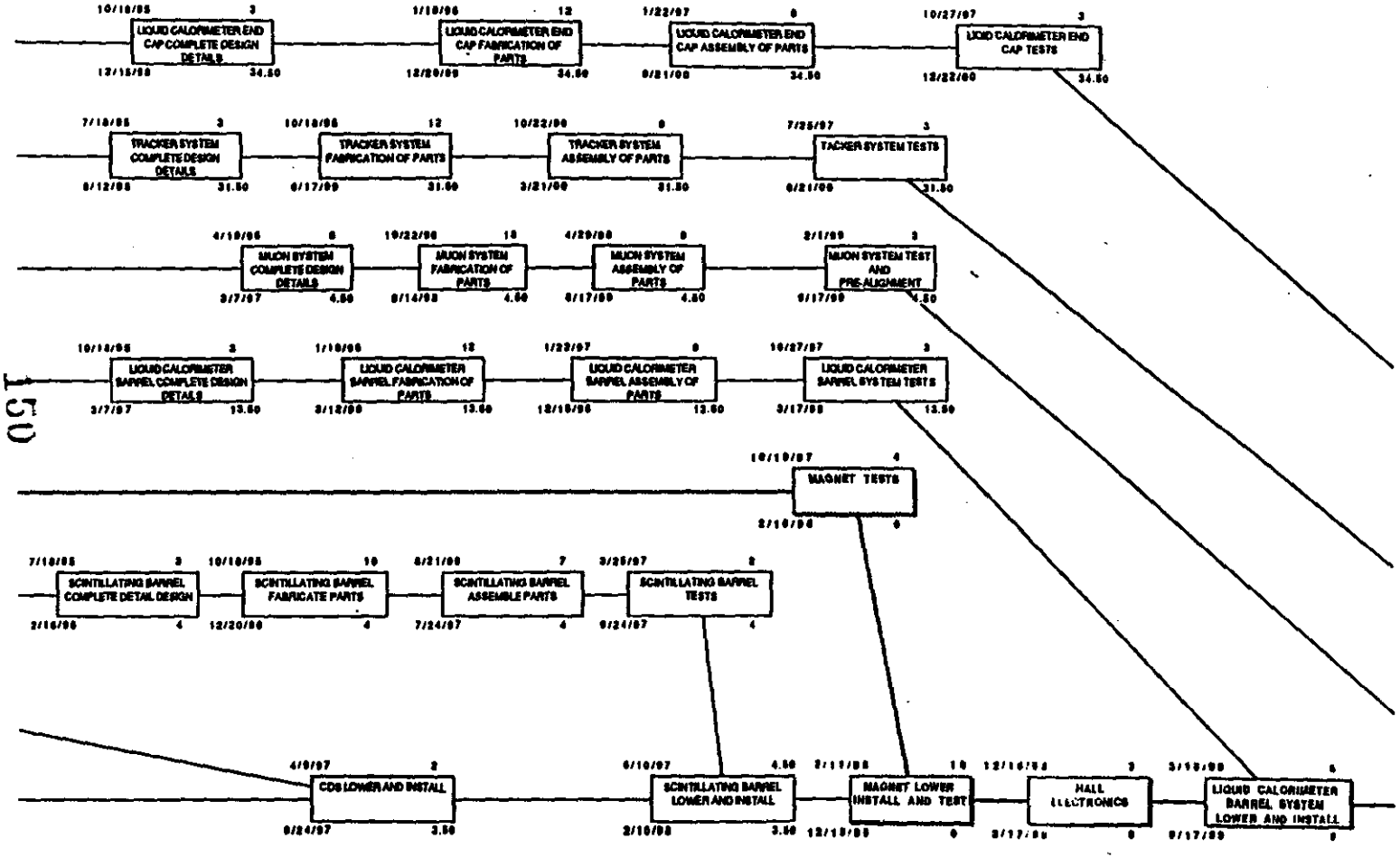
LIQUID CALORIMETER END CAP COMPLETE DESIGN DETAILS
LIQUID CALORIMETER END CAP FABRICATION OF PARTS
LIQUID CALORIMETER END CAP ASSEMBLY OF PARTS
LIQUID CALORIMETER END CAP TESTS
TRACKER SYSTEM COMPLETE DESIGN DETAILS
TRACKER SYSTEM FABRICATION OF PARTS
TRACKER SYSTEM ASSEMBLY OF PARTS
TRACKER SYSTEM TESTS
MUON SYSTEM COMPLETE DESIGN DETAILS
MUON SYSTEM FABRICATION OF PARTS
MUON SYSTEM ASSEMBLY OF PARTS
MUON SYSTEM TEST AND PRE-ALIGNMENT
LIQUID CALORIMETER BARREL COMPLETE DESIGN DETAILS
LIQUID CALORIMETER BARREL FABRICATION OF PARTS
LIQUID CALORIMETER BARREL ASSEMBLY OF PARTS
LIQUID CALORIMETER BARREL SYSTEM TESTS
MAGNET TESTS
SCINTILLATING BARREL COMPLETE DETAIL DESIGN
SCINTILLATING BARREL FABRICATE PARTS
SCINTILLATING BARREL ASSEMBLE PARTS
SCINTILLATING BARREL TESTS
CDS LOWER AND INSTALL
SCINTILLATING BARREL LOWER AND INSTALL
MAGNET LOWER INSTALL AND TEST
HALL ELECTRONICS
LIQUID CALORIMETER BARREL SYSTEM LOWER AND INSTALL

TOP LEVEL SCHEDULE 2002/1 MH 4/12/93

Durations to be checked with subsystem leaders.

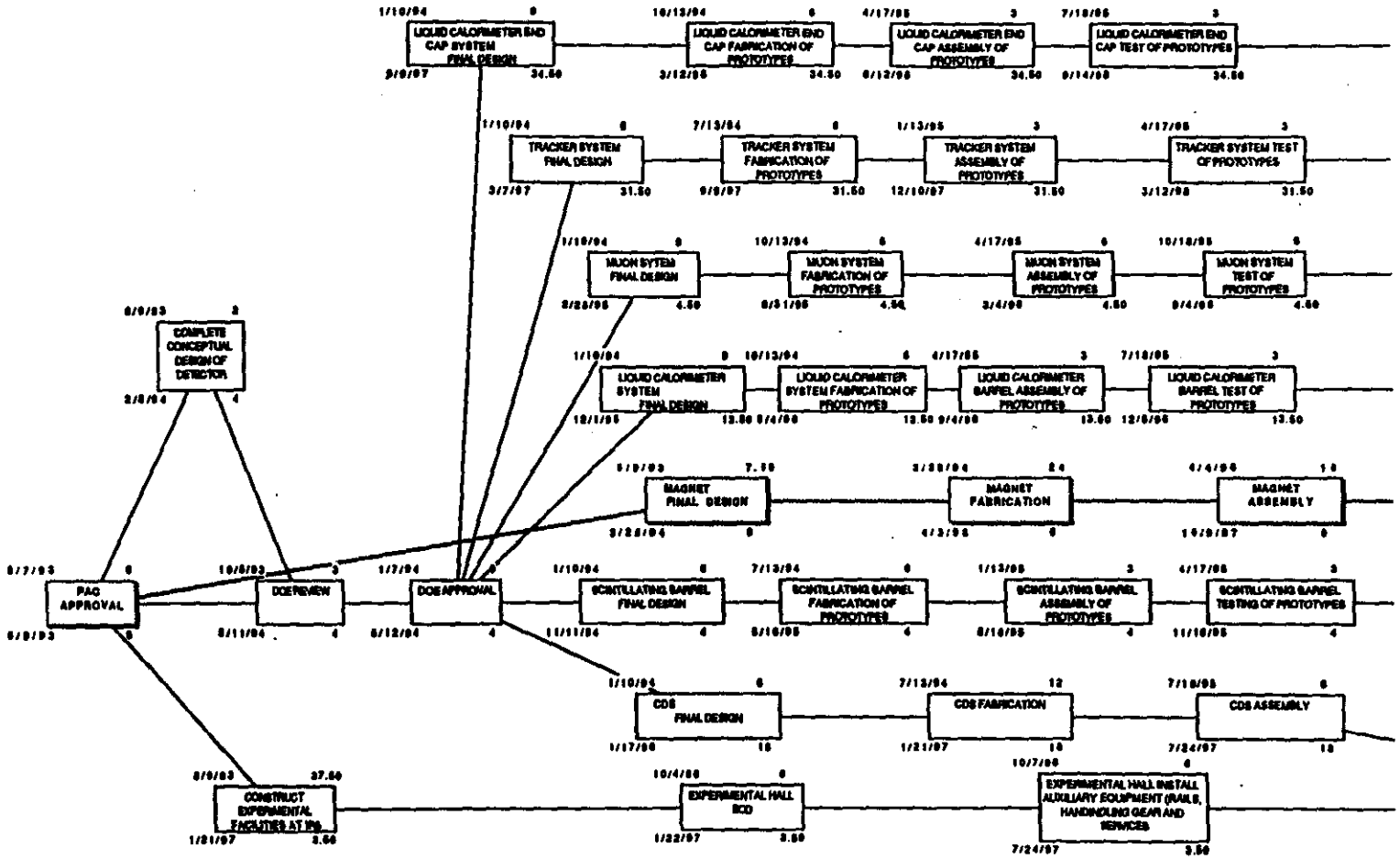

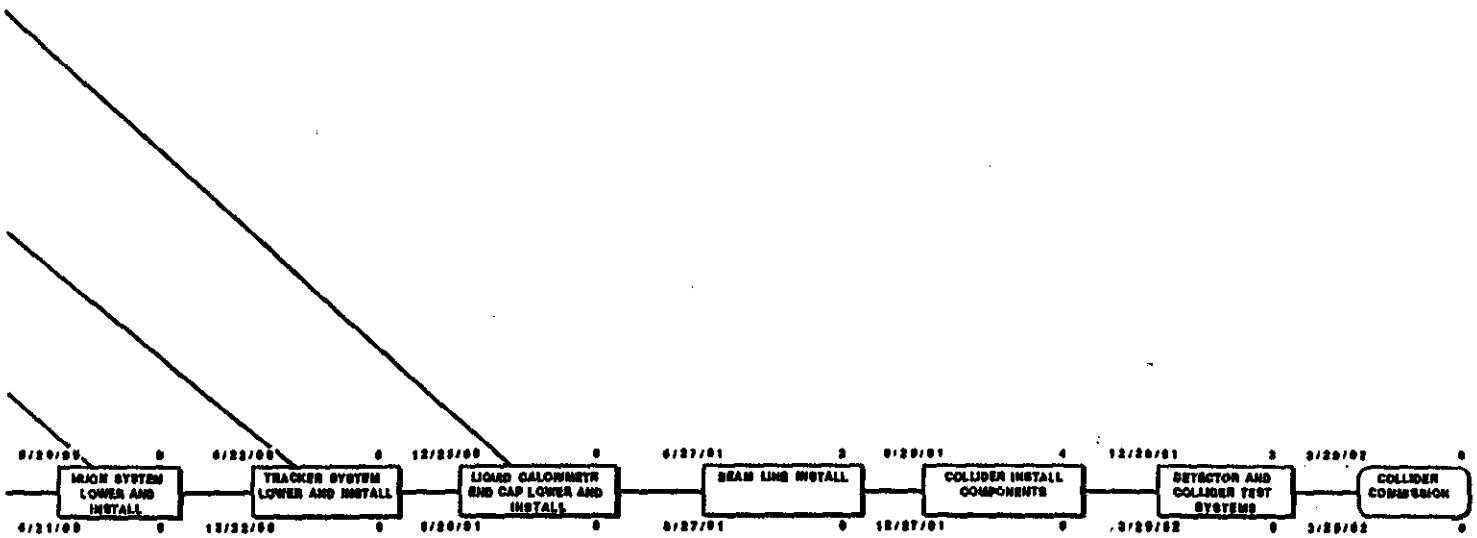
MUON SYSTEM LOWER AND INSTALL
TRACKER SYSTEM LOWER AND INSTALL
LIQUID CALORIMETR END CAP LOWER AND INSTALL
BEAM LINE INSTALL
COLLIDER INSTALL COMPONENTS
DETECTOR AND COLLIDER TEST SYSTEMS
COLLIDER COMMISSION

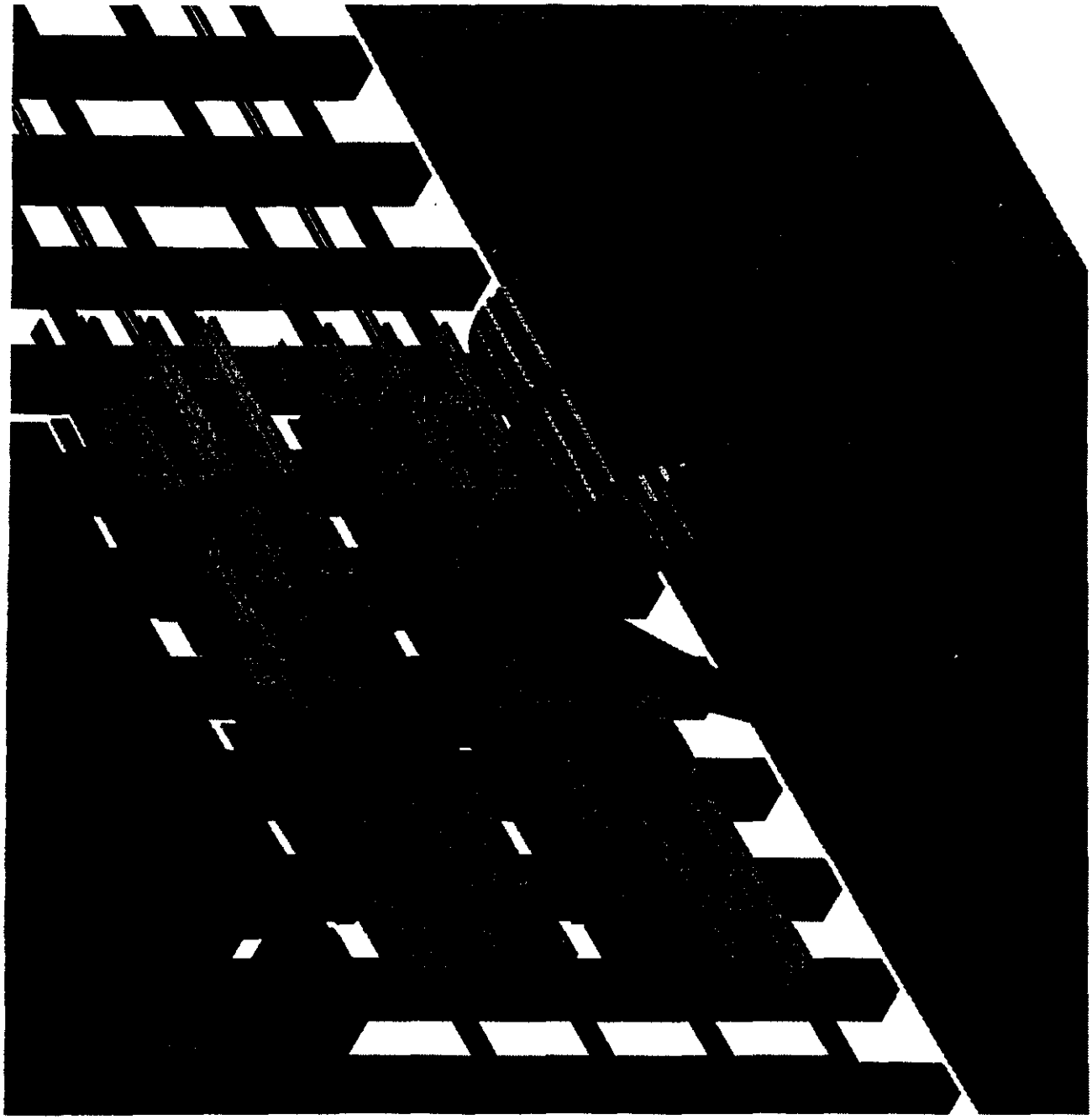

gem

γeμ

Presentation by:

J. Reidy

SBC R&D Program :

(schedules are subject to change)

1. Studies of scint. tile/fiber optical assemblies

   (Iowa, LSU, UMiss, ORNL, UT, MSU; Coordinator : J.Reidy)
   (activity period : April 93 - October 93)

2. Selection of PMT and study of PMT performance in mag.field

   (BU, Iowa, Fairfield, ORNL; Coordinator : Y.Onel)
   (activity period : April 93 - October 94)

3 Readout electronics

   (BU, ORNL; Coordinator : Yu.Kamyshkov)
   (activity period : April 93 - October 94)

4. Study of longevity of components in the rad. environment

   (ORNL, FU, UMiss, UT, TA&M; Coordinator : K.Young)
   (activity period : April 93 - June 94)

5. Study of n-activation of absorber and constr. materials

   (ORNL, UT, TA&M; Coordinator : H.Cohn)
   (activity period : April 93 - June 94)

6. Monitoring/calibration system

   (BU, Iowa, Fairfield; Coordinator N.Akchurin)
   (activity period : April 93 - October 93)

7. Construction and test of TTR SBC prototype

   (all Institutions; Coordinator : J.Reidy)
   (activity period : April 93 - April 94)

8. Construction of scint. module end mock-up

(UMiss, BU; Coordinator : J.Reidy)
(activity period : May 93 - December 93)

9. Construction of the full size pre-production prototypes

(US institutions and international collaborators;
Coordinator : M.Rennich)
(activity period : August 94 - March 95)

10. Development and construction of quality control equipment for mass production

(US institutions and international collaborators
Coordinators : J.Reidy, L.Sulak)
(activity period : April 93 - October 94)

11. Beam tests at FNAL

(US institutions and international collaborators;
Coordinator : J.Sullivan)
(activity period : March 94 - August 95)

12. SBC and passive absorber Monte Carlo simulations

(BU, ORNL, UT, UMiss; Coordinator : Yu.Kamyshkov)
(activity period : April 93 - January 94)

TILE/FIBER R+D

- study + adopt SDC/CDF experience
- choice of appropriate + cost effective materials for construction
- prepare recomm for tile/fiber construction of TTR prototype
- establish + test final technique for mass production
- gain experience + expertise in the construction + quality control of tile/fiber assemblies
- establish + exp confirm the parameters relevant for SBC performance
  - light yield per mip
  - uniformity
  - reproducibility of construction method
  - robustness

TILE/FIBER R+D 6/15-10/15

1) Scint, WLS
2) Size, shape
3) #fibers, depth, shape > Grooving
4) Glue?
5) Wrapping (Painting?)
6) Fiber (ov)ing
7) PMTs (?) - how many
8) PMT interface
9) Long term effects >10/15

TTR TEST 10/1-2/3/84

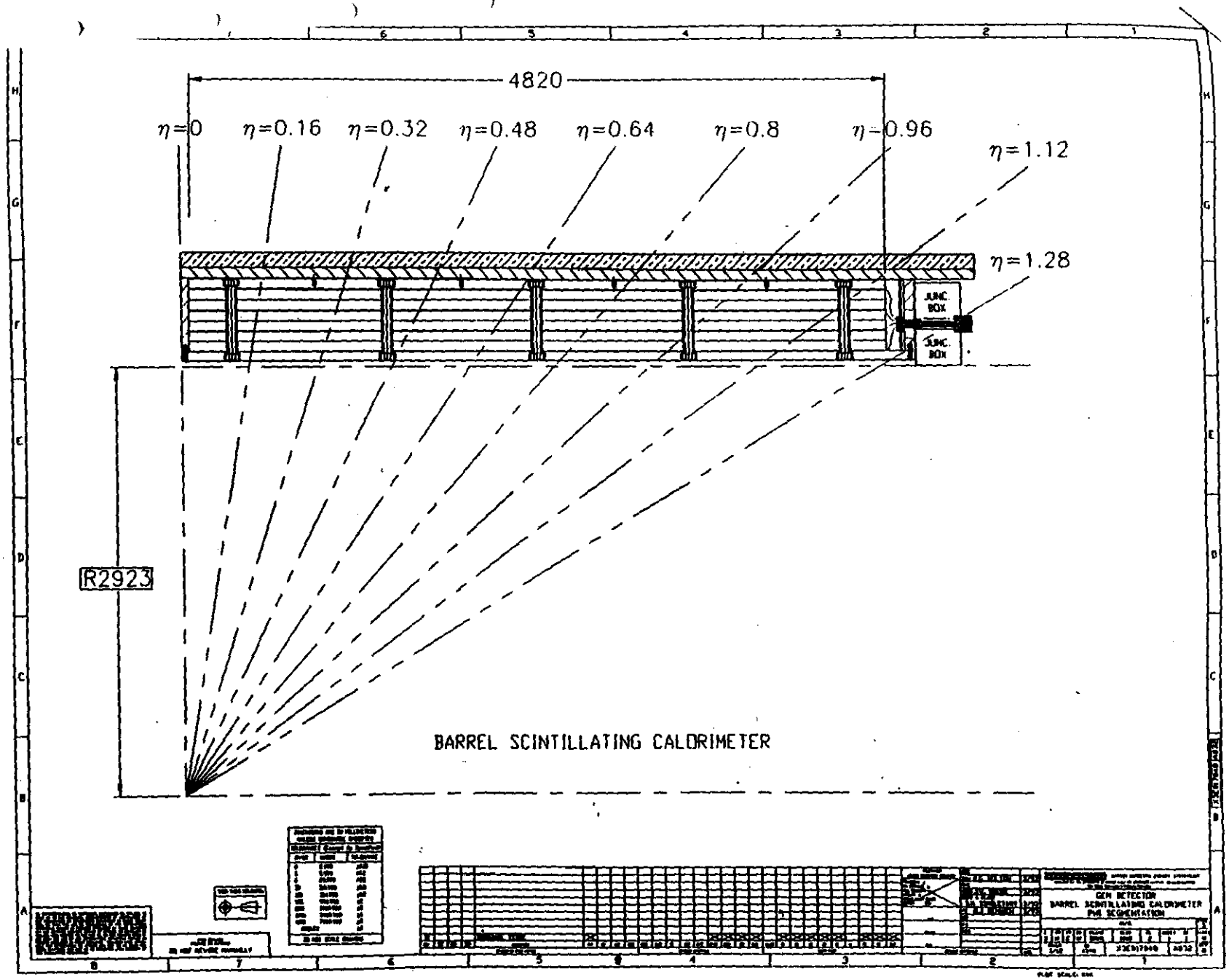
4820
η=0
η=0.16
η=0.32
η=0.48
η=0.64
η=0.8
η=0.96
η=1.12
η=1.28
JUNC. BOX
JUNC. BOX
R2923
BARREL SCINTILLATING CALORIMETER

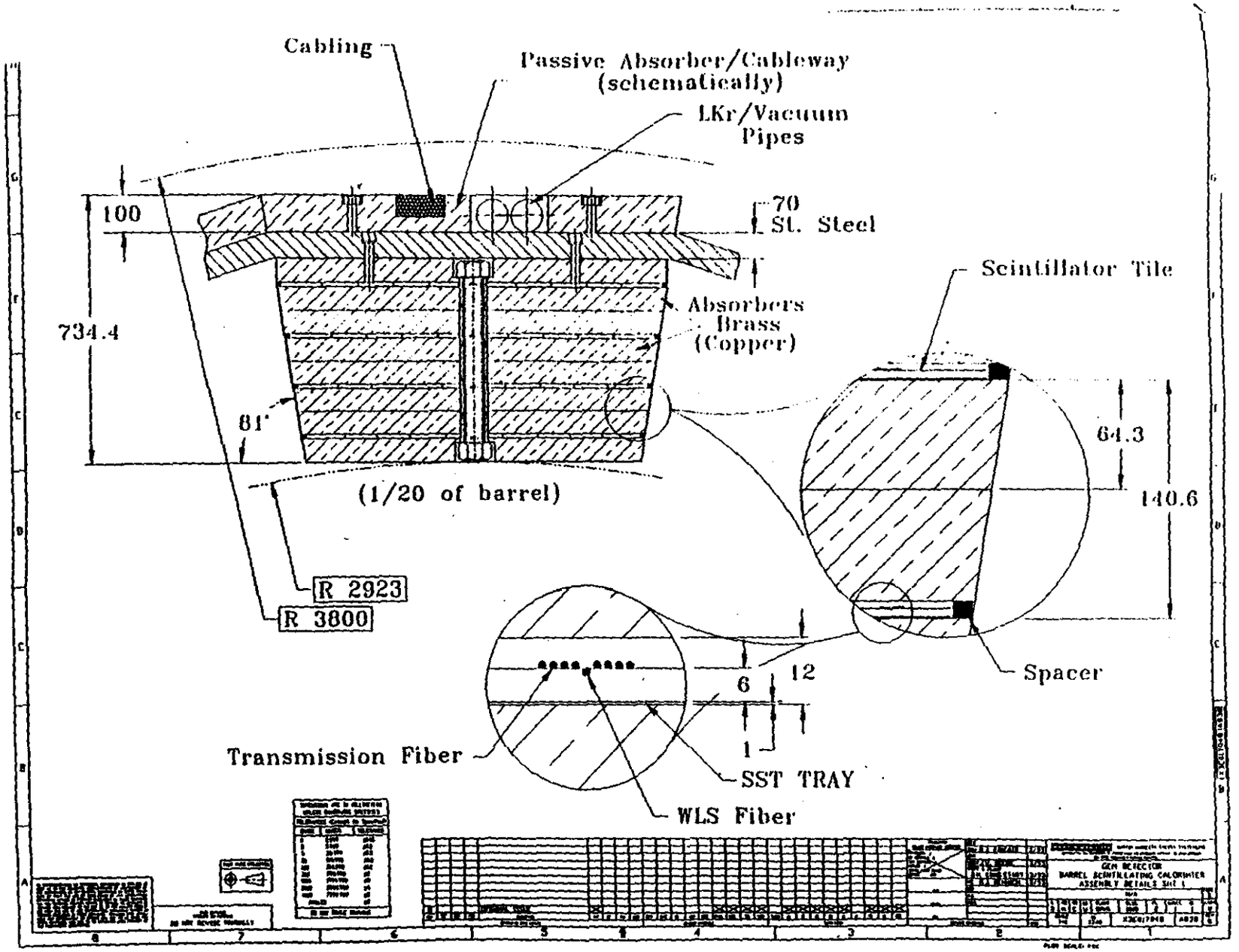
Cabling
Passive Absorber/Cableway
(schematically)
LKr/Vacuum
Pipes
100
70
St. Steel
734.4
Absorbers
Brass
(Copper)
81°
(1/20 of barrel)
R 2923
R 3800
Scintillator Tile
64.3
140.6
Spacer
6
12
1
Transmission Fiber
SST TRAY
WLS Fiber

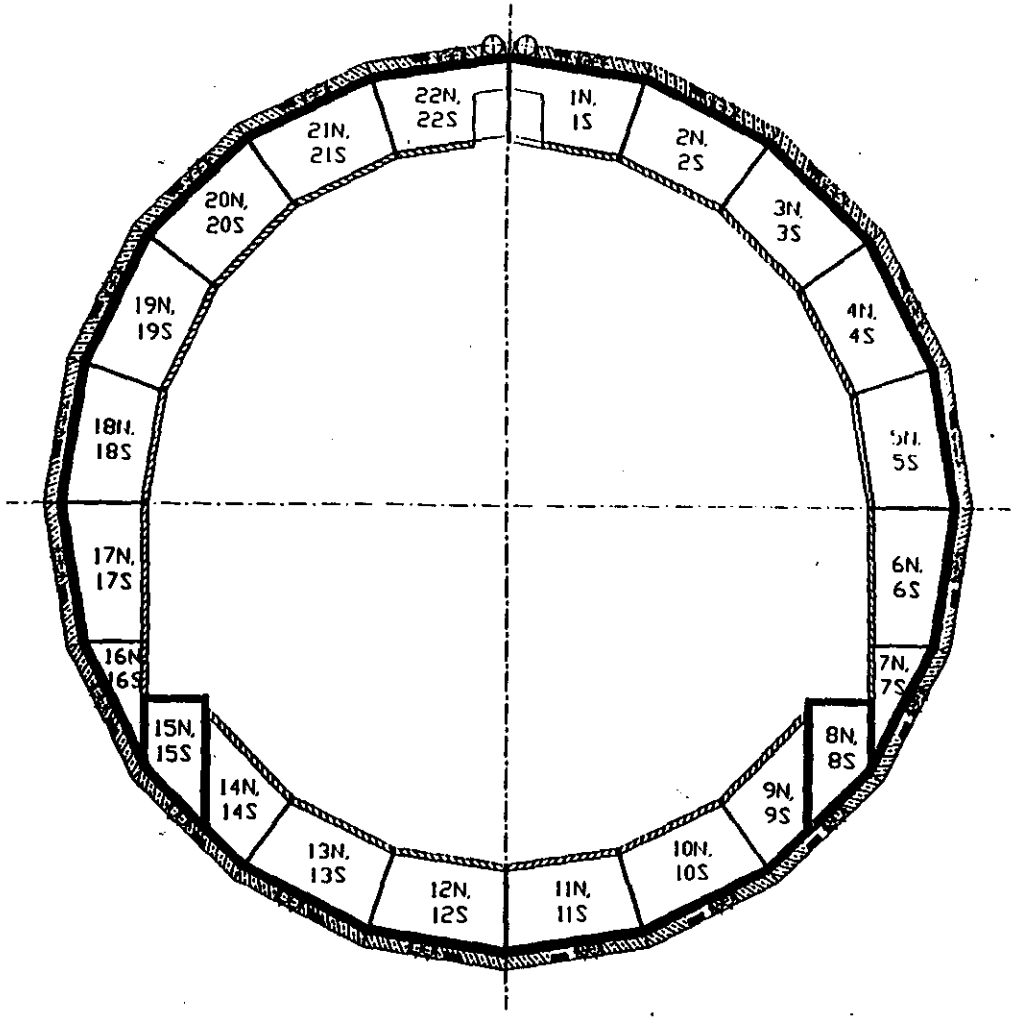

VIEW LOOKING SOUTH FROM NORTH

GEN DETECTOR
BARREL SCINTILLATING CALORIMETER
MODULE DESIGNATIONS

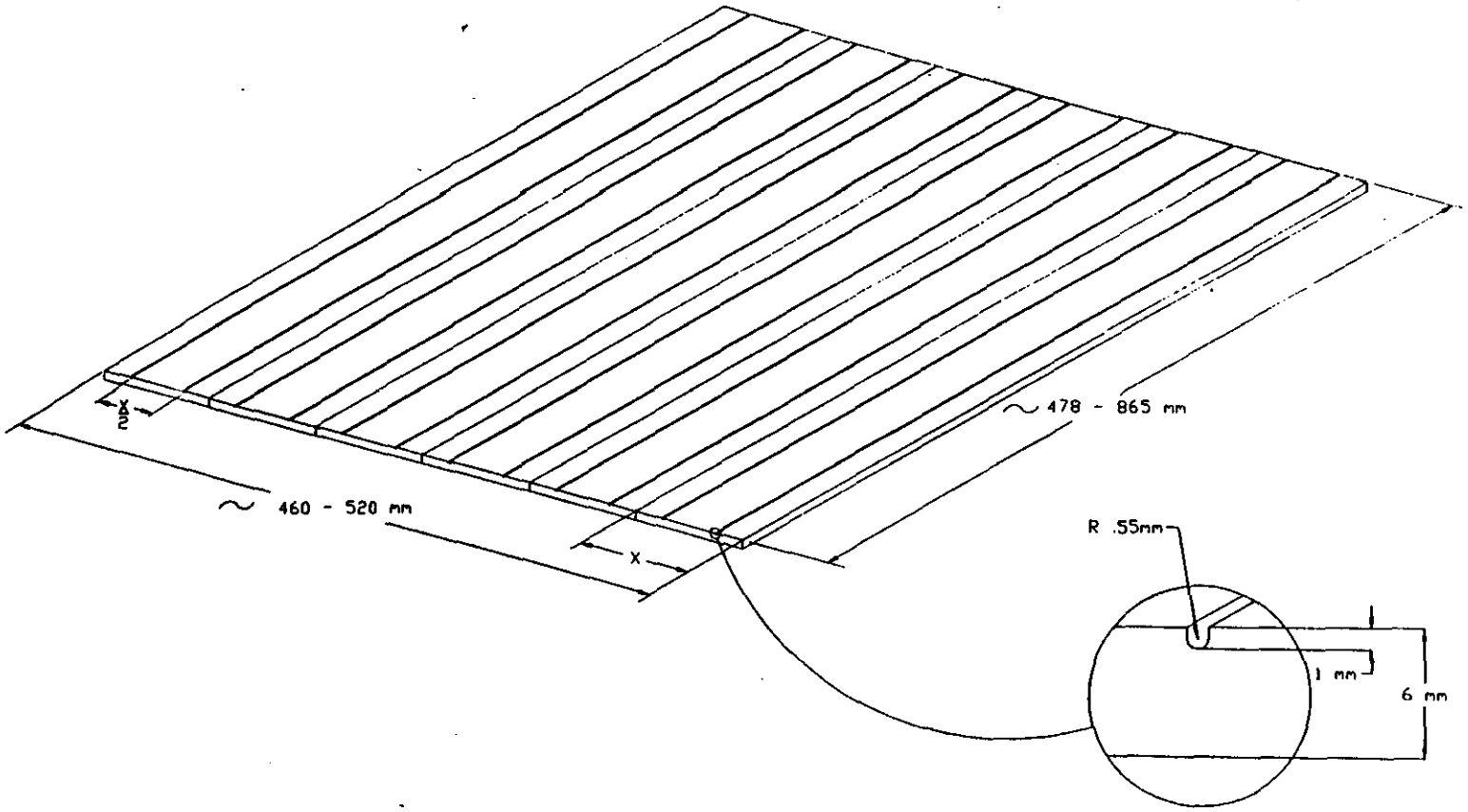

NOTE: X = W/6

NOTE: LENGTH AND WIDTH DIMENSIONS ARE APPROXIMATE.

GEM DETECTOR
BARREL SCINTILLATING CALORIMETER
TILE DETAIL (OPTION 2)

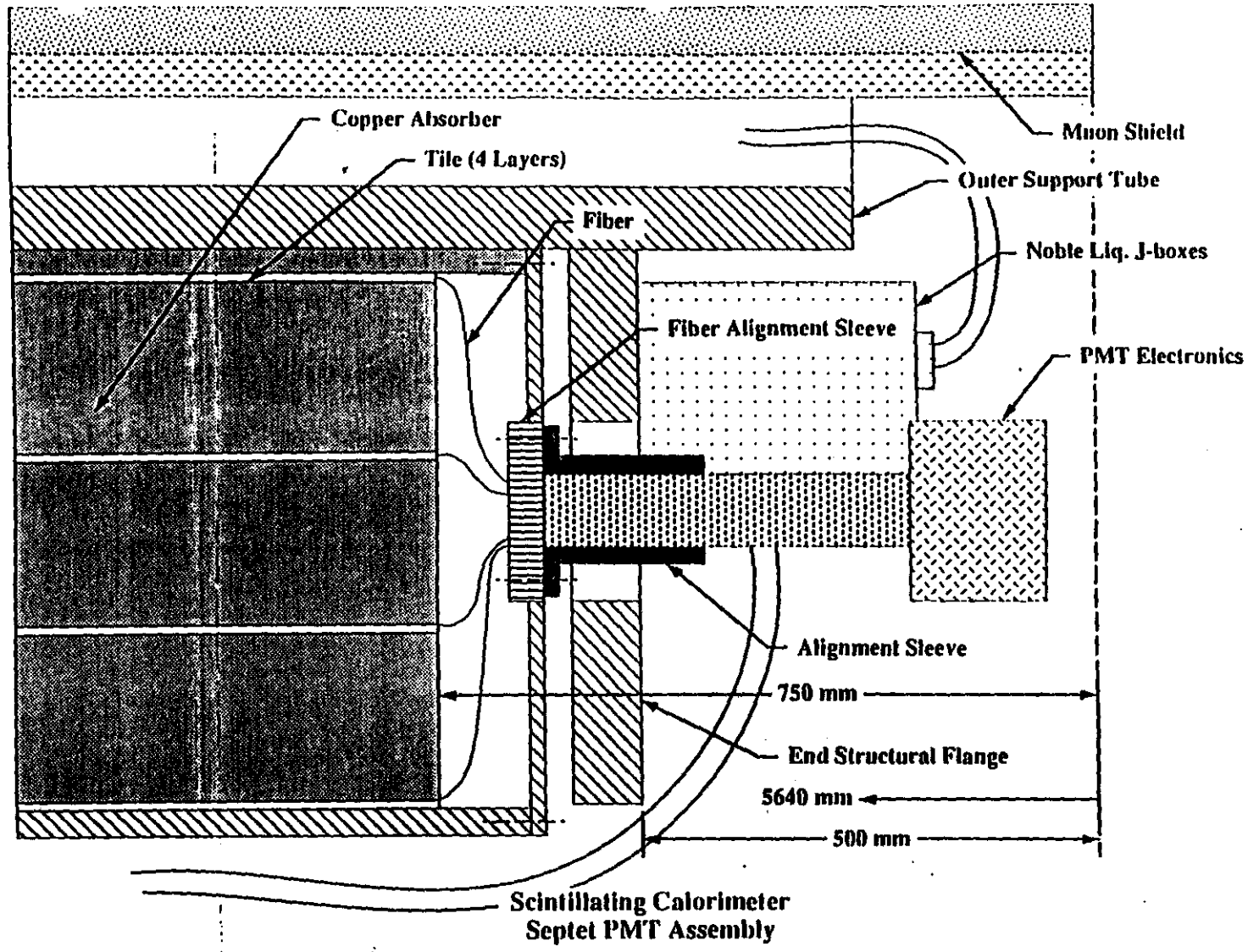
Copper Absorber
Tile (4 Layers)
Fiber
Muon Shield
Outer Support Tube
Noble Liq. J-boxes
Fiber Alignment Sleeve
PMT Electronics
Alignment Sleeve
750 mm
End Structural Flange
5640 mm
500 mm
Scintillating Calorimeter
Septet PMT Assembly

G.TC.009

ORNL

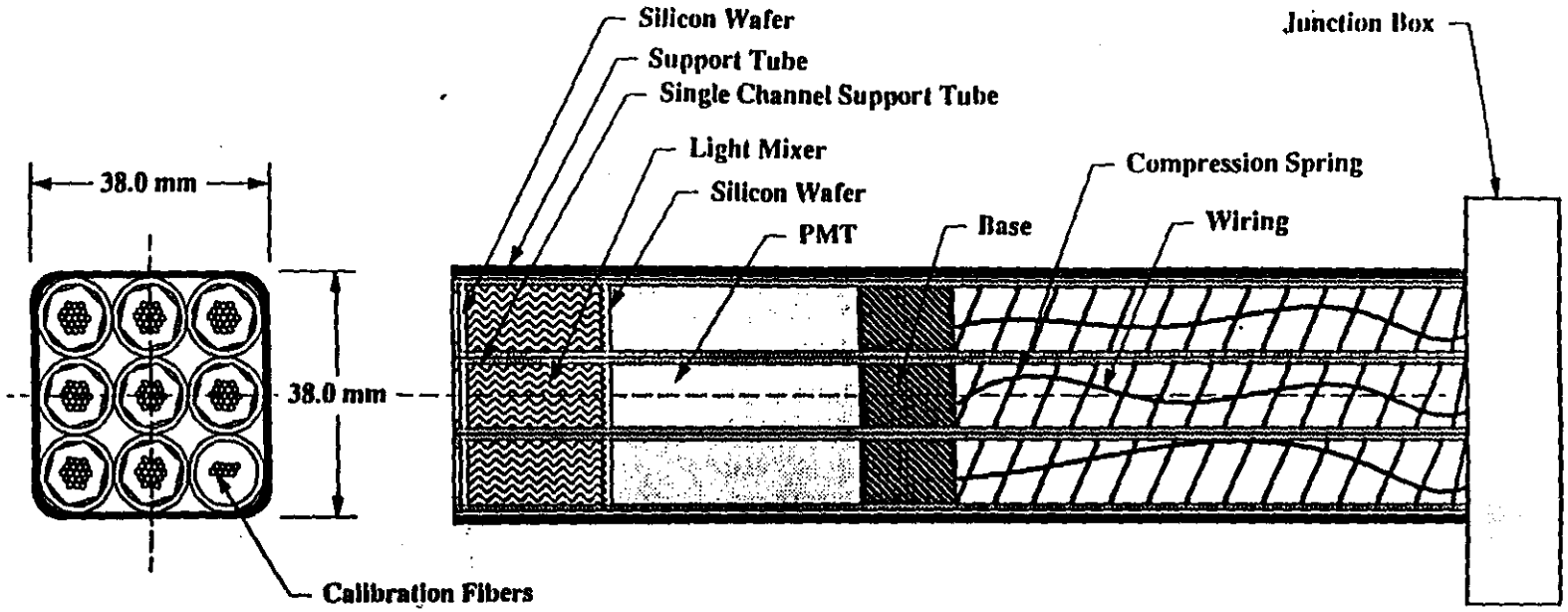

Scintillating Hadron Calorimeter
Eight PMT with One Calibration Channel
Readout Assembly

G.TC.014

ORNL
Feb 9, 1992

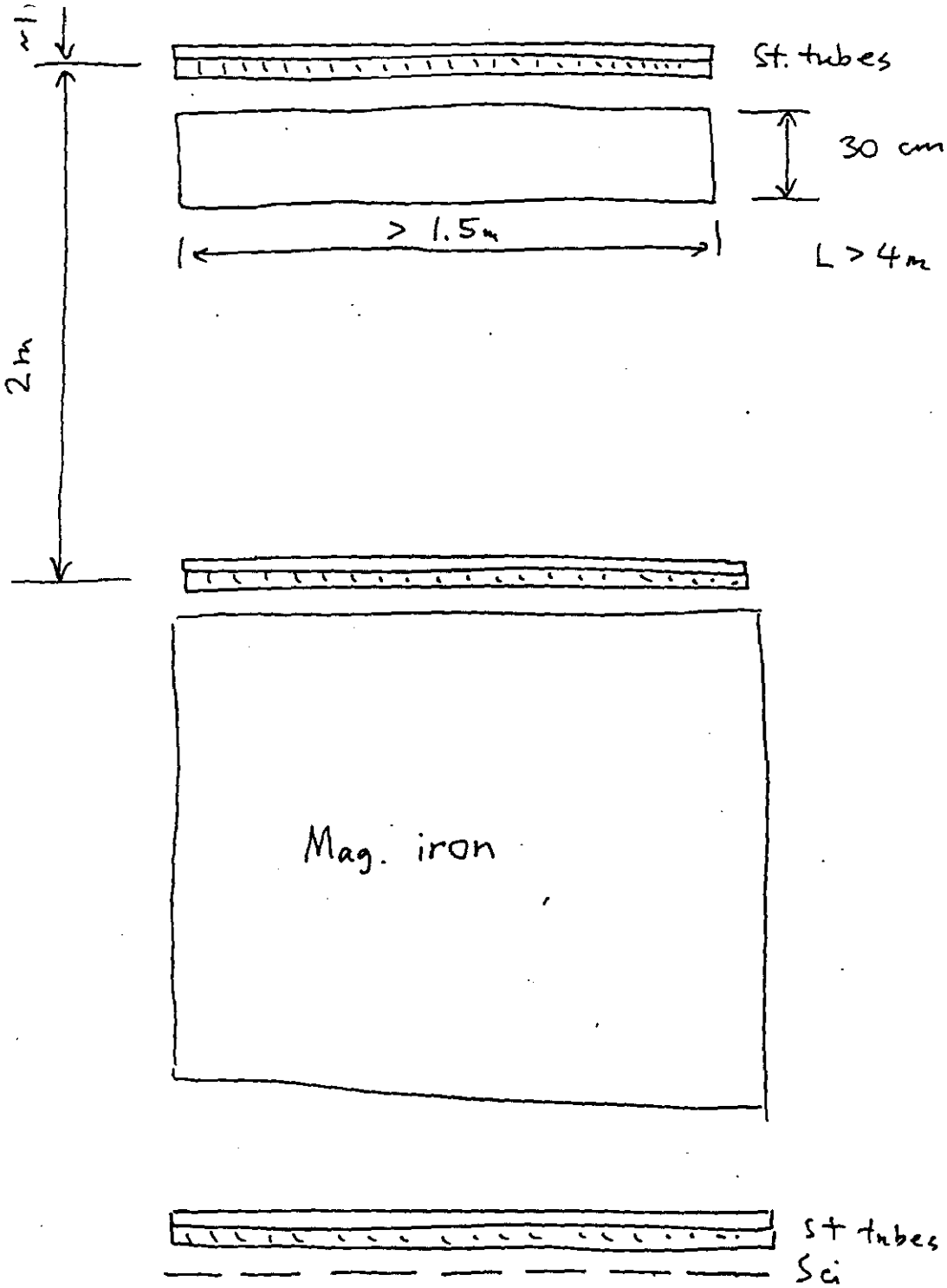

TTR test

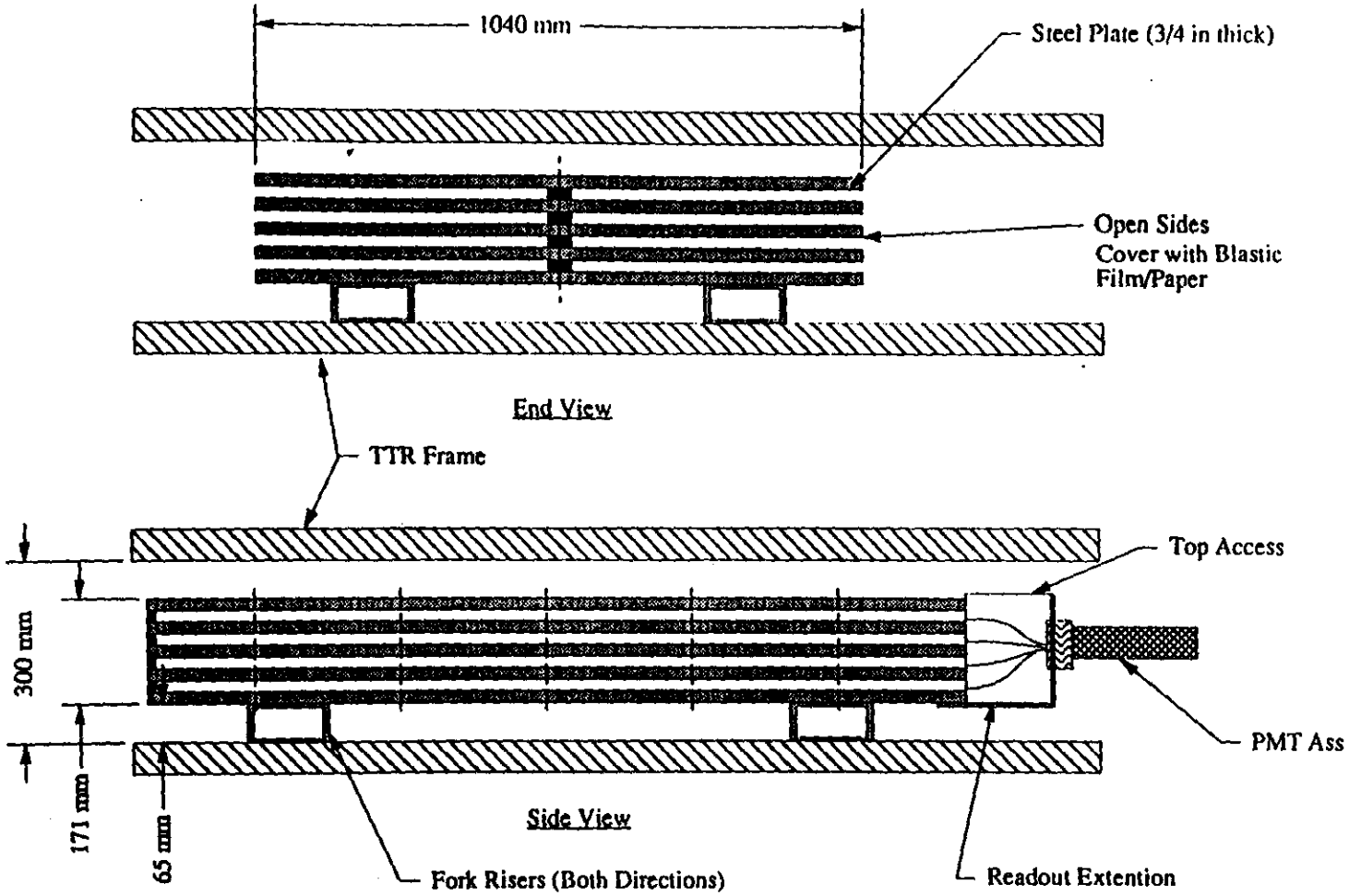

Texas Test Rig

ORNL 4/7/93

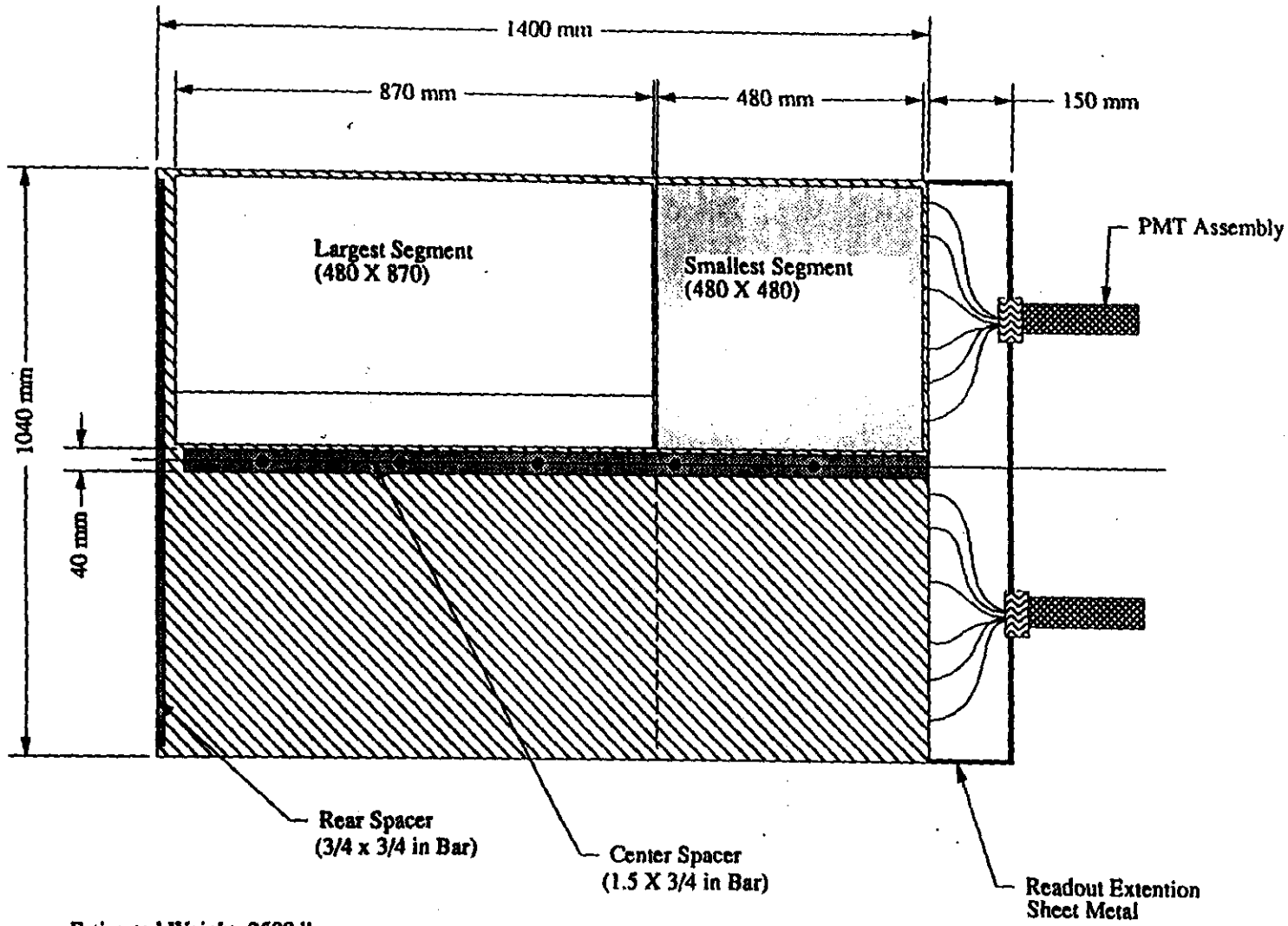

Estimated Weight: 2500 lbs

Texas Test Rig

ORNL 4/7/93

TTR TEST

- integration of tile/fiber, calibration/monitoring and PMT readout systems.
- robustness of optical assemblies
  - tile-fiber
  - fiber-fiber
  - fiber-PMT
- confirm light yield, uniformity, reproducibility
- study timing properties + shaping times
- study muon recognition + eff for muon trigger purpose
- gain experience with tile/fiber assemblies
- develop requirements for production QA tests

gem

γeμ

Presentation by:

R. Shang

Quality Control and Mass Production

Rencheng Shang

SSCL / Tsinghua Univ., Beijing

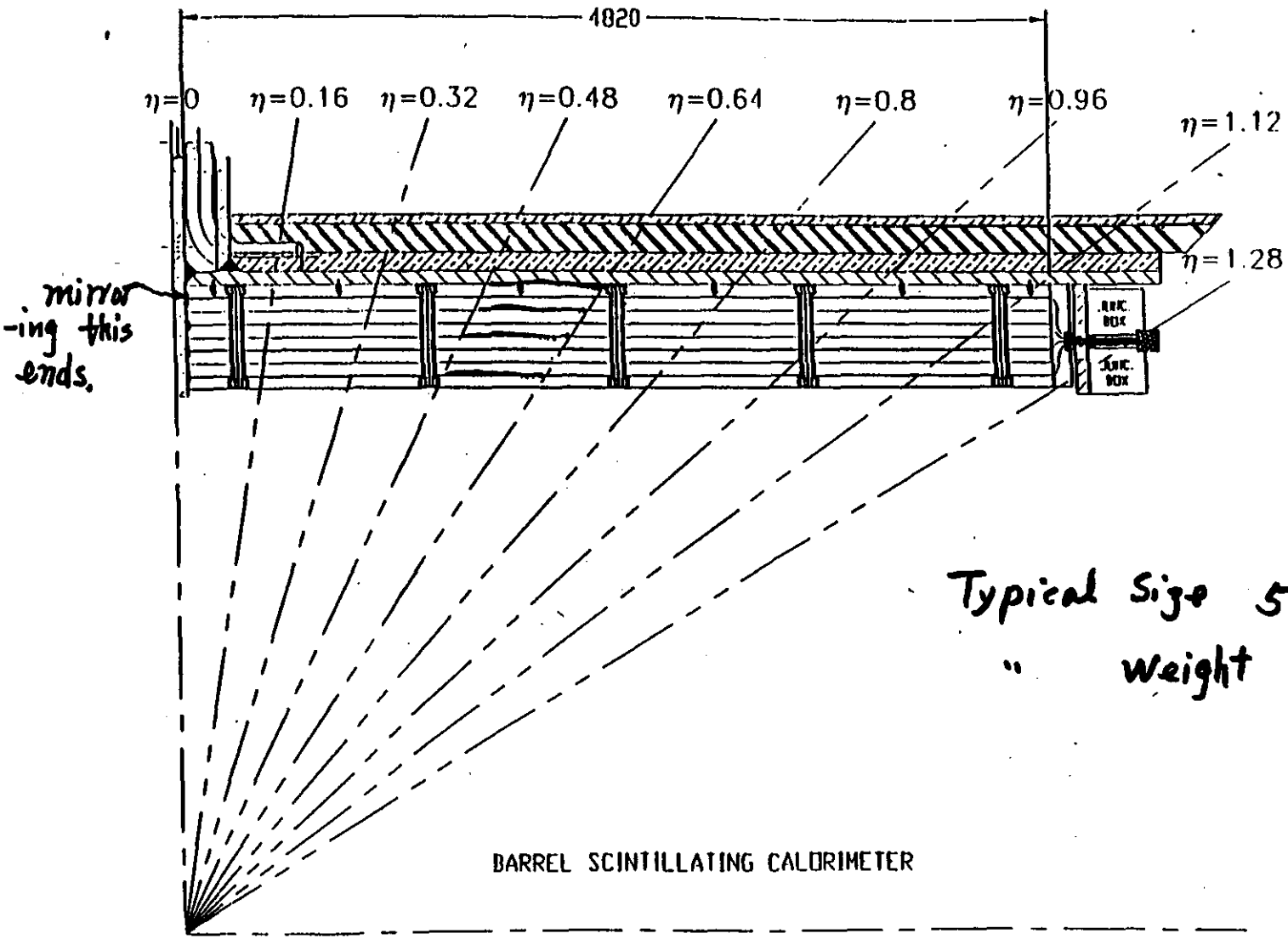
4020
η=0
η=0.16
η=0.32
η=0.48
η=0.64
η=0.8
η=0.96
η=1.12
η=1.28
mirror-ing this ends.
JUNC. BOX
JUNC. BOX
Typical Size 5m x 1m x 0.1m
" Weight 24 T.
BARREL SCINTILLATING CALORIMETER

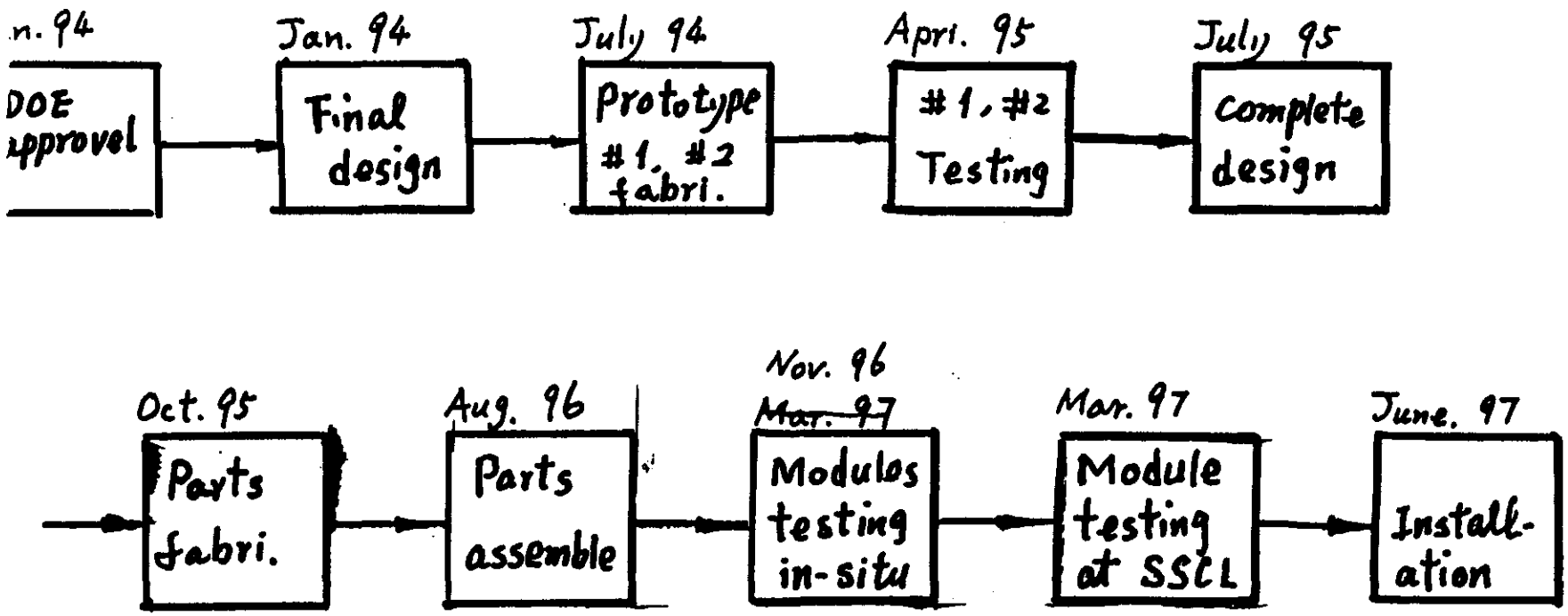

Milestone of fabrication and Q.A.

Fiber test setup

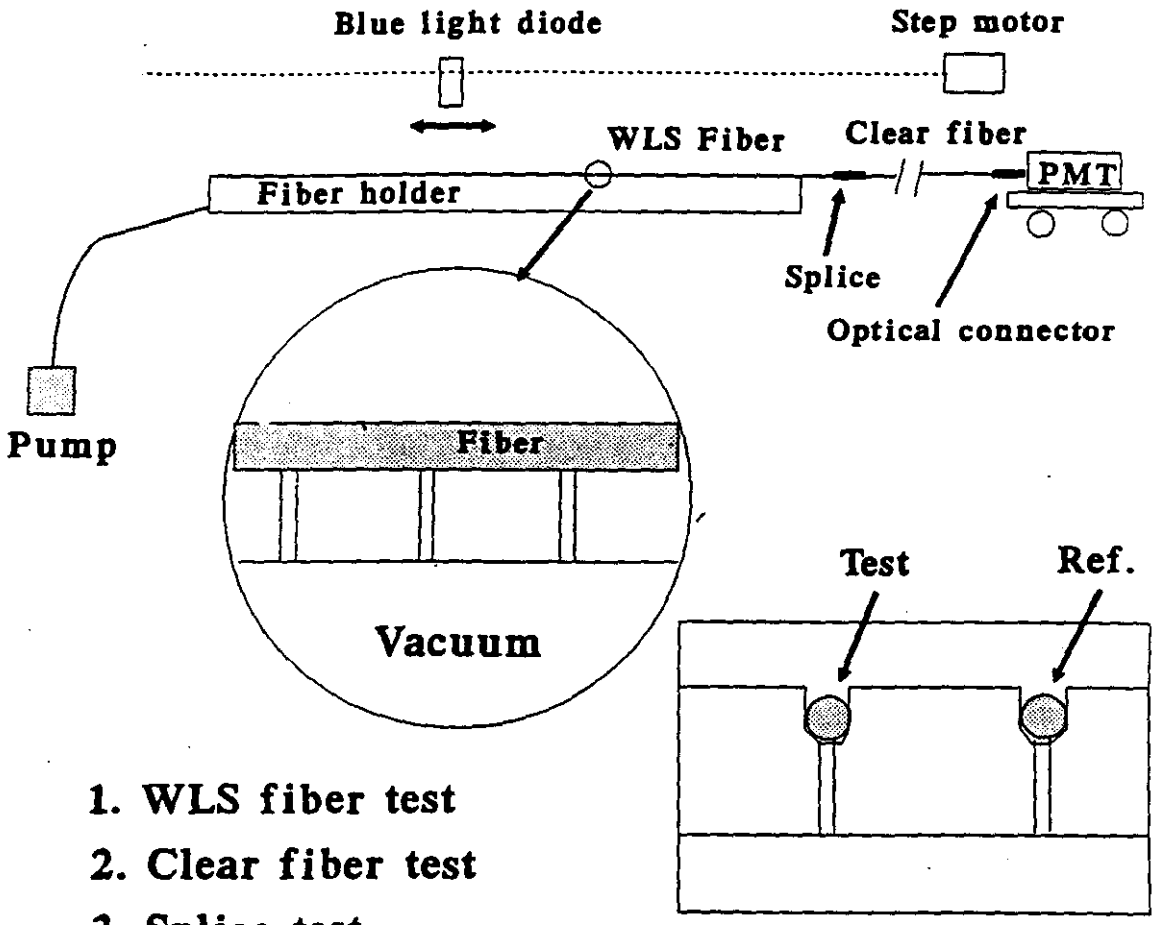

1. WLS fiber test
2. Clear fiber test
3. Splice test
4. Mirroring test

Module Production Flow Chart

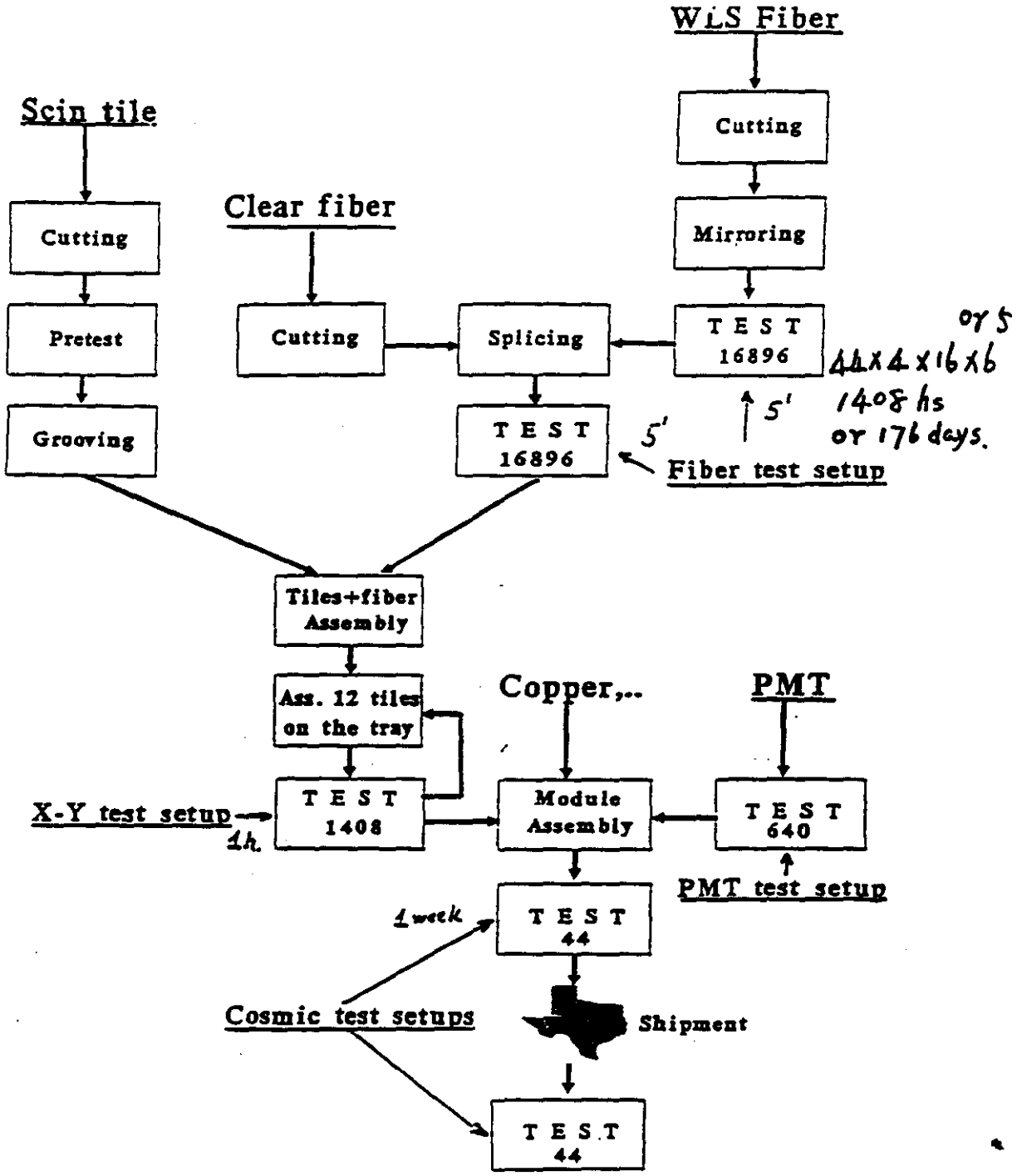

Tile test setup

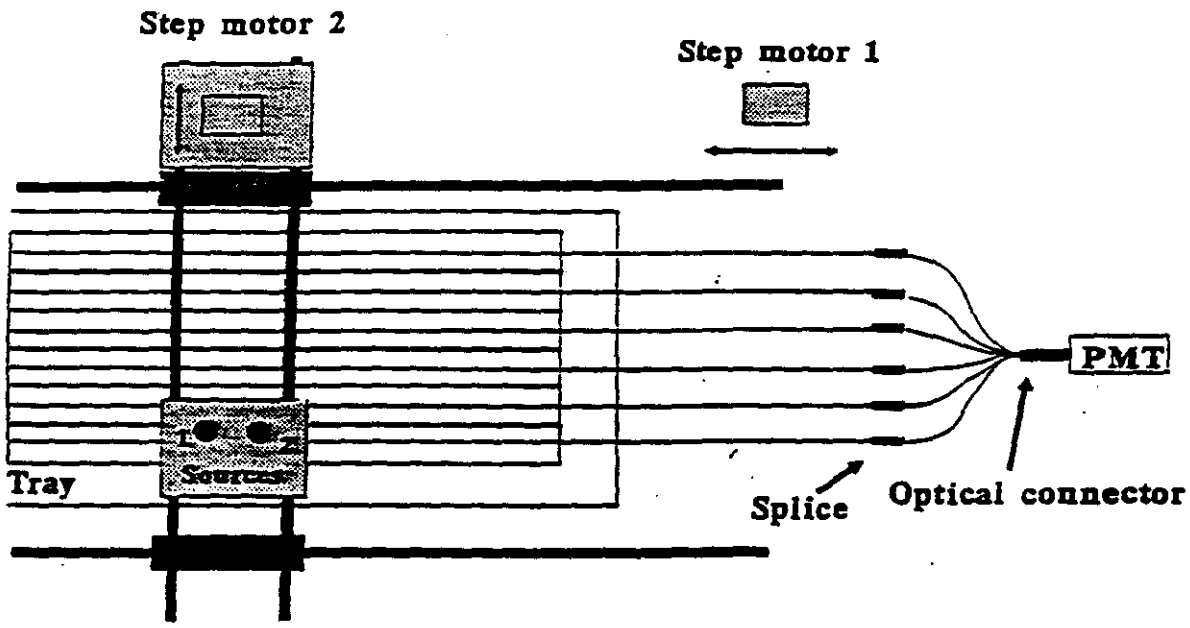

Source 1 is X-ray tube

Source 2 is Ru^{106} (up to 3.5 MeV)

or Bi^{207} (0.5, 1.0 MeV.)

1. Tiles test
2. Fiber gluing test
3. Tile wrapping test
4. Absolute light output test

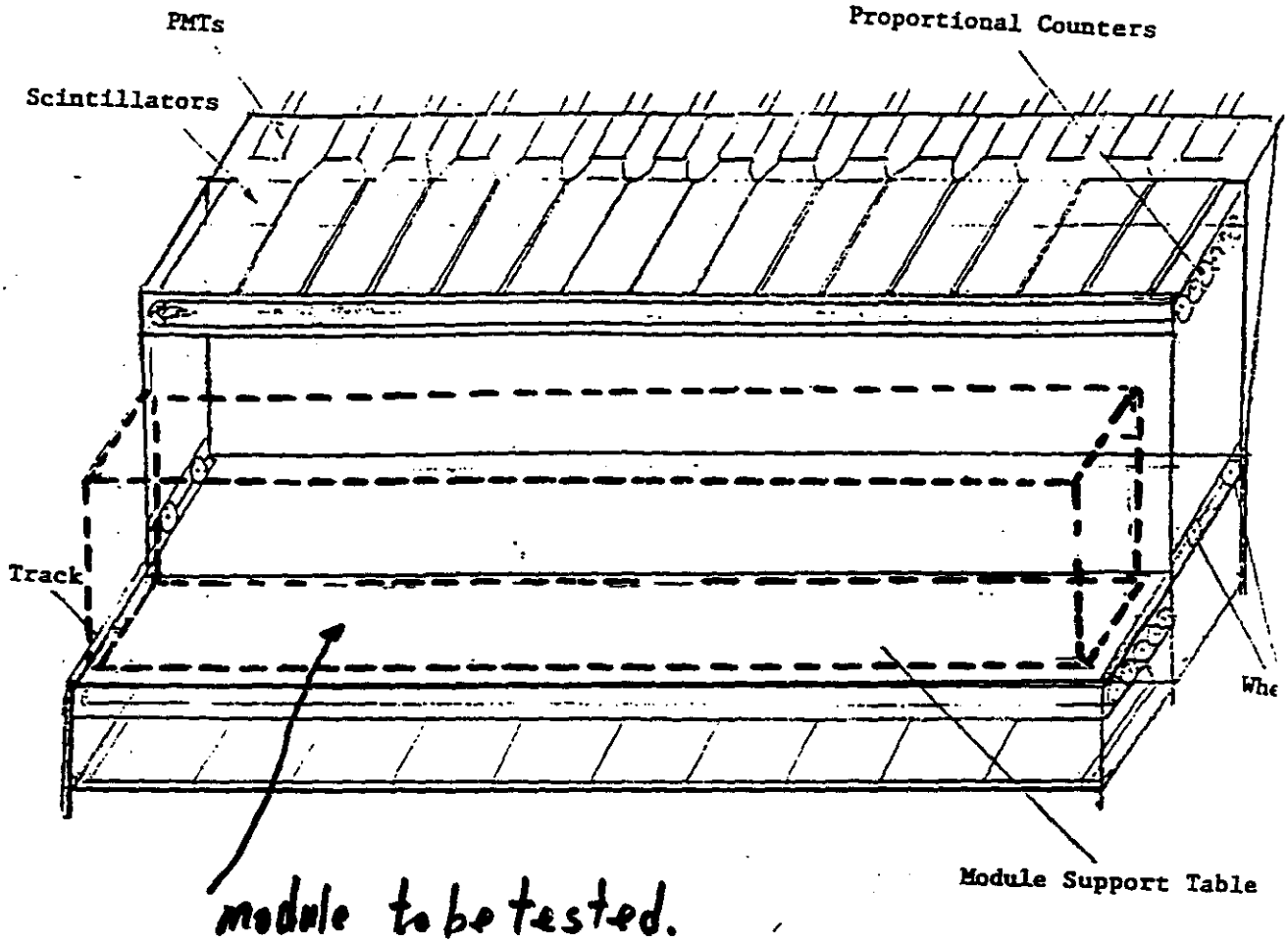

Casmic Ray Test Stand for Scintillating
Calorimeter Modules

Requirement for CRTS

1. Can support and handel module of 5m×1m×0.7m 24T. a crane of 30T must be available.
2. One at fabricating site, One at SSCL. measurements at two stands should be coinsistance
3. long term reliable working ~ 1 year.
4. MIP signals' nonuniformity < 5% small E, θ range
5. mesh size ~ 5 cm × 5 cm.
6. Trigger rate / mesh > ~~0.1~~ 0.025 / sec.
7. Auto-control and data base recording

Testing requirement:

1. nonuniformity within a tower < 10%.
2. statistical precision < 3%
   (Total counts / mesh ~ 1000)

Testing time ~ ~~6~~ 12 hours / . . .

gem

γeμ

Presentation by:

S. Chae
ORNL

OVERALL GEM SCHEDULE MILESTONES

Complete GEM Baseline II concept and TDR	-	April 1993
Complete DOE and SSCL Reviews of GEM detector	-	October 1993
Receive DOE approval to begin fabrication	-	May 1994
Begin Installation of GEM in experimental hall	-	October 1996
GEM detector commisioning	-	February 2002
SSCL Beam Line commissioning	-	March 2002

Scintillating Barrel Production Milestones:

Discuss Production Plans with Collaborators	- January-June 1993
Complete Final Production Plans with Collaborators	- June-December 1993
Complete Manufacturing Pre-Prod. Module	- November 1994
Install Module Prototype for Fermi test	- March 1995
Complete Manufacturing Design	- November 1994
Begin Full Scale Manufacturing	- April 1995
Begin Barrel Structure Assembly @ SSCL	- May 1996
Complete Scintillating Modules and Barrel Fabrication	- August 1996
Begin Module Installation	- August 1996
Complete Scintillating Barrel Assembly (at SSCL)	- July 1997
Install Barrel in Experimental Hall	- September 1997

gem

γeμ

Presentation by:

M. Rennich
ORNL

Mark Kamnick, ORNL

(DRAFT- Five)

GEM Detector

Superconducting Super Collider Laboratory
Dallas, Texas, USA

External Calorimeter Collaboration

Preliminary Design Package

June 1, 1993

(DRAFT- Five)

Index

Introduction

1. System Description
2. Milestones and Schedule
3. Conceptual Design Figures
4. Material Specifications
5. Assembly Procedures
6. Quality Control Procedures
7. Communications
8. Engineering

Appendix A. ASTM Specifications

Appendix B. Work Breakdown Structure

Introduction

The GEM Collaboration recently completed the Technical Design Report for the GEM Detector which is proposed for installation in the Superconducting Super Collider Laboratory (SSCL) in Dallas, Texas. The collaboration is also developing an overall procurement plan for the final design and fabrication of the detector systems. The External Calorimeter subsystems discussed in this document are among the earliest components to be installed in the experimental hall, consequently, there is a strong motivation to proceed as quickly as possible with the development of a collaborative organization capable of designing and fabricating these systems. Our goal is to determine a proposed construction team and procedure befor August 1993.

GEM is a subatomic particle detector, consequently, physics requirements are paramount in the design and construction of the external calorimeter . Thus, the engineering and physics interact, primarily in two ways. First, the physics requirements are determined in a study of all the GEM Detector subsystems in a computational analysis based on 'monte carlo' techniques. Second, the computer software required to process signals from the detector is based on the physical characteristics of the detector. As a result of this interrelationship, external calorimeter physicists will be involved throughout the design and fabrication phases to insure that the subsystem is capable of the optimum performance.

In the next two months, institutes which express an interest in significant portions of the external calorimeter subsystems will be invited to participate in the development of a comprehensive physics analysis, engineering design and manufacturing plan. We are ready to answer questions and take suggestions on the attached information to aid with the development of this plan. We are also ready to visit institutes or receive visitors to discuss specific plans for involvement in this project.

Several fabrication and assembly scenarios have been proposed for the external calorimeter systems. The procedure which is finally selected will be based on two requirements. First, the arrangement shall be efficient and cost effective in order to make the best use of the resources of the SSCL and the collaborating institutes. Second, the direct involvement of the calorimeter physicists in the monitoring of all aspects of the design, fabrication and assembly must be included in all scenarios.

Of the many proposed scenarios three appear to be the most promising:

1. United States institutes and the SSCL assume responsibility for significant portions of the final assembly of the subsystems at the SSCL. Components and material would be provided by collaborators according to specific skills and availability. The US and other collaborators would provide students to perform appropriate assembly operations such as fiber bonding and installation.

2. A single institute or country commits to the fabrication and assembly of a complete subsystem (scintillating barrel, passive end caps or scintillating forward). This scenario assumes that a single organization would take responsibility for all fabrication aspects of the project from design through final assembly including material procurement. The responsible institute would coordinate activities with the SSCL and collaborating US institutes via formal documentation and communications established at the beginning of the project. It is assumed that the responsible institute would include the involvement of physicists with an oversight and analysis capability.

3. A single institute or country assumes responsibility for most of the assembly operations while other organizations provide material or components based on specific availability or skills. The responsible institute would coordinate activities with the SSCL and collaborating US institutes via formal documentation and communications established at the beginning of the project. It is assumed that the responsible institute would also include the involvement of physicists with an oversight and analysis capability. This scenario emphasizes the use of the strengths of many organizations. It has the disadvantage of requiring complex coordination by the SSCL.

Several international partners have already expressed an interest in aspects of the external calorimeter project. In addition to US collaborators they will be provided with this package. Specific international partners which are potential material and components sources are listed below:

Copper:	Albania and China
Stainless Steel structures:	China, Czech Republic and Russia
Scintillating tiles:	China, Czech Republic and Russia
Photomultiplier Tubes:	China, Czech Republic and Russia
Tungsten:	Belarus, China and Russia
Electronics:	China, Ecuador and Russia
Calibration and Monitoring:	India, China and Russia

International partners with possible interest in the assembly and manufacturing of subassemblies are:

Scintillating Barrel Modules:	Albania, China and Russia
Scintillating Barrel Ass. (at SSCL):	Albania, China and Russia
Passive end caps:	Albania, China and Russia
Forward Hadron:	Belarus, China and Russia

Final decisions concerning cost, schedule and sources will be undertaken in cooperation with the SSCL and GEM management. The final procurement and production plan will reflect a realistic use of the resources offered by potential collaborators as well as the management and oversight capabilities of the US institutes charged with the successful completion and operation of GEM.

Engineering will be performed under the guidance of Oak Ridge National Laboratory, acting on behalf of the SSCL, with the full participation of collaborating institutes. This will permit the use of the most efficient available manufacturing methods and equipment.

A preproduction prototype module of the scintillating barrel will be constructed in advance of the full scale fabrication effort to develop the working arrangements and plans for the final production of the calorimeter. The prototype may also be used in beam tests to demonstrate the functional characteristics of the detector.

Personnel

Lead Physicists

Yuri Kamyshkov
Oak Ridge National Laboratory
P. O Box 2008-6372
Oak Ridge, Tennessee 37831-6372

EMail: PHYVAX::Kamyshkov
Phone: 615-576-6914
FAX: 615-576-2822

Lawarence Sulak
Boston University
Physics Department; Room 255
590 Commonwealth Avenue
Boston, Massaschuetts, 02215

EMail: Sulak::BUPHYC
Phone: 617-353-9454
FAX: 617-353-9393

Lead Engineers:

Mark Rennich,
SCIGEM Lead Engineer

EMail: BITNET%"REN@ORNLSTC"
Phone: 615-574-0298

Clay Wynn,
Scintillating Barrel Lead Engineer

EMail: BITNET%"WYN@ORNLSTC"
Phone: 615-574-1279

Steve Chae,
Hadronic Forward Lead Engineer

EMail: BITNET%"CHAESM@ORNLSTC"
Phone: 615-576-8180

Oak Ridge National Laboratory
P. O Box 2008-6353
Oak Ridge, Tennessee
37831-6353

FAX: 615-574-7986

GEM Detector Staff:

Mike Harris;
GEM Lead Engineer

EMail: SSCVX1::Harris
Phone: 214-708-6043

Bill Wisnewski
GEM Calorimeter Lead

EMail: SSCVX1::WJW
Phone: 214-708-6018

Superconducting Super Collider
Physics Research Division
2550 Beckleymeade Ave
Dallas, Texas; 75237

FAX: 214-708-6088

GEM DETECTOR PHONE LIST

	PHONE	FAX	E-MAIL	INSTITUTE	POSITION
GEM MANAGEMENT					
Barish, Barry	818-356-6684	818-795-3951	BARISH@CITHEX	CALTECH	Spokesman
Harris, Mike	214-708-6143	214-708-6088	HARRIS@SSCVX1	SSCL	Project Engineer
Sanders, Gary	214-708-6189	214-708-6088	SANDERS@SSCVX1	LANL	Project Manager
Willis,Bill	914-591-8100	914-591-8120	Willis@Nevis	Columbia	Spokesman
Wisniewski, Bill	214-708-6018	214-708-6088	WJW@SSCVX1	SSCL	
EXTERNAL CALORIMETER PHYSICISTS					
Bugg, Bill	615-974-3342	974-7843	BUGG@SLACVM	U.T.	
Kamyshkov, Yuri	615-576-6914	615-576-2822	PHYVAX::KAMYSHKOV	ORNL	Lead Ext. Cal. Physicist
Paar, Hans	619-534-2568	619-534-0173	HPAAR@SDPHGG	UCSD	
Reidy, Jim	214-708-6386	214-708-6088	REIDY@UMSPHY	U. MISS	
Rutherfoord, John	602-621-2657		UAZHEP::RUTHERFO	Univ of Az	
Sulak, Larry	617-353-9454	617-353-9393	SULAK@BUPHYC	BOSTON UNIV.	Lead Ext. Cal. Physicist
Sullivan, Jim	MIT: 617-253-7537	617-258-0700		MIT	
	BU: 617-353-6034	617-353-9393	Sullivan@BUPHYC	BU	
Webb, Bob	409-845-4012	409-845-2590	Webb@tamphys	TEXAS A&M	
Worstell, Bill	617-353-9884	617-353-9393	WORSTELL@BUPHYC	BOSTON UNIV	
EXTERNAL CALORIMETER ENGINEERS					
Chae, Steve	615-576-8180	615-574-7986	CHAESM@ORNLSTC	ORNL	Lead Forward Cal. Eng.
Eberle, Cliff	214-708-6013	214-708-6088	EBERLE@SSCVX1	ORNL	Integration Engineer
Osborne, Dave	617-353-6022	617-353-9393		BOSTON UNIV.	
Rennich, Mark	615-564-0298	615-574-7986	REN@ORNL	ORNL	Lead Ext. Cal. Engineer
Wynn, Clay	615-574-1279	615-574-7986	WYN@ORNLSTC	ORNL	Lead Bar./End Cap Eng.
INDUSTRIAL PARTNERS					
Lyn Adams	41-22-734-4015	41-22-733-9301		Eurus Inc.	

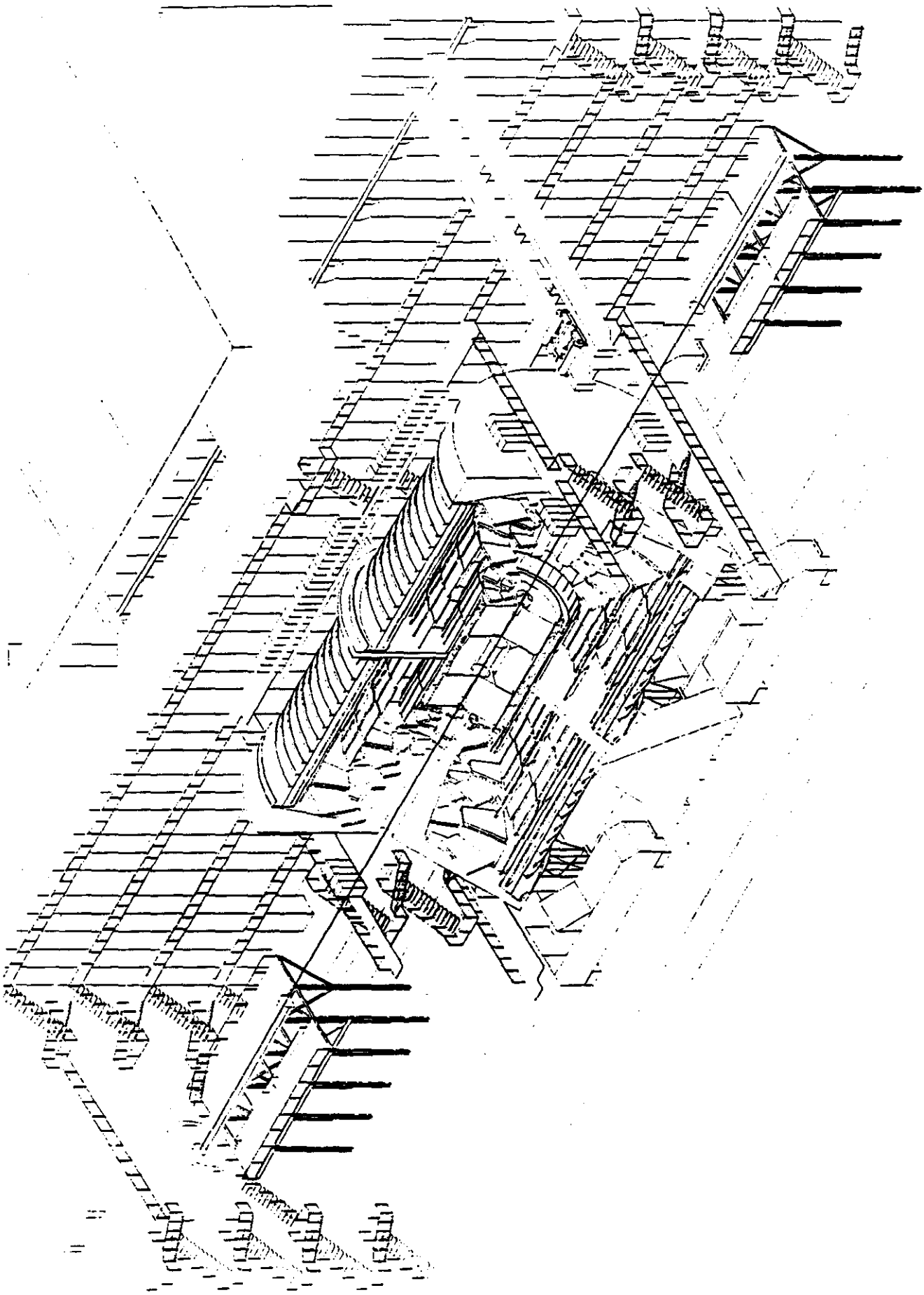

1. System Description

A. Scintillating Barrel Calorimeter

The scintillating barrel calorimeter surrounds the liquid calorimeter system increasing the system absorption length (up to 10.5 lambda at eta~=0) and providing structural support for three noble liquid cryostats and two end cap passive absorbers with embedded forward hadron units. As a detector the scintillating barrel serves as an outer hadron calorimeter providing tail catching for the hadron jets with modest improvement of jet energy resolution and missing Et measurements. The role of the scintillating barrel becomes more significant for the detection of very high, rear Pt (5-10 TeV) jet events. The detection system of the scintillating barrel calorimeter can also distinguish the minimum ionizing particles above the level of noise and neutron background with the resolution time of 12 ns.

The mechanical design is based on the available radial space, assembly procedures and structural rigidity requirements. Brass was chosen as an absorber material to provide maximum absorption length at minimal cost. Modular construction has been proposed to provide a means of manufacturing the scintillating calorimeter in collaborating institutes distant from the SSCL. Absorber plates will be will be rolled to the correct thickness at the mill then sized to fit the modular assemblies prior to shipment to the assembly site for installation into the modular assemblies. The forty-four modules are of a size and weight which can be handled and shipped via conventional means.

The scintillating barrel is mounted in the Central Detector Support (CDS) and is equipped with rails which are used for the support and installation of the liquid system and the passive end-caps. A round stainless steel tube provides the foundation for the scintillating barrel. The tube will be a single welded tube which will be attached to the CDS with bolted joints. The support tube will be manufactured off-site in shippable pieces which will be delivered to IR-5 at the SSCL where the pieces will be welded together in an assembly stand prior to installation of the modules. Major characteristics and parameters of the scintillating barrel calorimeter are give in the Table 1.

Table 1. Characteristics and Parameters of the Scintillator Barrel Calorimeter

Inner radius of the system	:	2923 mm
Outer radius of the system (including Pb and BPE)	:	3800 mm
Total z-extension (including readout)	:	± 5300 mm
Z-extension of absorber	:	± 4820 mm
Barrel Sections	:	2 Halves
Mechanical modules (total)	:	40
(in phi projection)	:	20
(in theta projection)	:	2
Total weight (support and modules)	:	1240 T
Weight of outer support tube	:	140 T
Weight of inner support shell	:	80 T
Weight of outer barrel passive absorber	:	130 T
Weight of 40 modules	:	890 T
Weight of the largest module	:	24 T
Thickness of Scintillator/Copper stack	:	607 mm
Number of Copper layers in module	:	8
Thickness of each Copper layer	:	69 mm
Weight of one Copper layer	:	approx. 2.0 T
Number of Scintillator layers	:	4
Gap for scintillator in the absorber	:	9 mm
Thickness of scintillator tiles	:	5 mm
Number of tiles in one module layer	:	2 (phi)x8 (theta)
	:	0.16 (phi) x 0.16 (theta)
Tile size	:	~ 50 cm x 50 - 87 cm
Eta coverage (scintillating barrel)	:	± 1.28 (31-149 degrees)
Number of WLS fibers per tile	:	5
Distance between fibers in one tile	:	~ 18 cm
Average WLS fiber length	:	70 cm
WLS fiber diameter	:	1 mm
Total number of WLS fibers	:	12,800
Total length of WLS fibers required	:	9 km
Transport fiber length (average)	:	350-4850 (2600) mm
Transport fiber diameter	:	1 mm
Total number of transport fibers	:	12,800
Total length of transport fibers required	:	33.3 km
Number of longitudinal readout sections	:	1
Total number of readout channels	:	640
Required photomultiplier tube gain	:	1×10^5
Time resolution for single 3 mm 50 x 50 cm2 tile	:	12 ns (MC)
MIP seen in one readout channel as minimum	:	22 p.e. (MC)
as maximum	:	35 p.e. (MC)
Tile response uniformity for 50 x 50 cm2 area	:	10% (phi) (MC)
		15% max (theta) (MC)
Hadron jet energy resolution (with 4 layer instrumented scintillating. barrel)	:	$60\%/\sqrt{(E)} + 3.5\%$

B. Passive End Cap

The passive end caps will be are bolted stacks of copper plates with a central support tube for the forward hadron calorimeters. The end caps will be assembled at the SSCL. The forward hadron assemblies will be fitted inside the end caps prior to installation of the combined systems in the GEM detector. Major characteristics and parameters of the passive end caps are given in the Table 2.

Table 2. Characteristics and Parameters of the Passive End Caps:

Number of Passive End Caps	: 2
Inner radius of the system	: 877 mm
Outer radius of the system	: 3800 mm
Front Z-extension	: ± 5210 mm
Back Z-extension	: ± 5690 mm
Total weight (st.st. support and absorber)	: 73 T
Weight of Forward support tube	: 20 T

C. Forward Hadron Calorimeters

The forward hadron calorimeters (FHC) will use liquid scintillator as a sense media. The liquid scintillator will be contained in small tubes which will be lined to improve reflectivity. The scintillating light will be transported to PMT's via quartz fibers. The stainless steel tubes will be parallel to the beam axis. [Note: An alternative design based on quartz rods or fibers and cherenkov light is also under consideration. The alternative design is very similar to the baseline configuration, consequently, it is assumed that it can be substituted at a later date following a comparison of test results].

The front face of the FHC will be located at 5,124 mm from the interaction point and will be approximately 2 meters in total length. The active length will be approximately 1315 mm (11.53 cm per lambda) and the total weight will be approximately 35 metric tons per side. With the inside diameter of 80 mm and the outside diameter of 1412 mm, the FHC will cover eta from 2.82 to 5.68 at the middle of the active section of the module. Each FHC side will consist of 960 channels. The readout section (readout fibers, light mixer, PMT's and cables) will require additional 600 mm. The segmentation will be adjusted to keep the dimensions in the eta and phi direction approximately the same.

The forward calorimeter design is based on commercially available 3 mm OD (0.15 mm thick) stainless steel tubes within an absorber matrix of tungsten heavymet. The inner wall of the tubing will be lined with 0.1 mm thick glass tubing to enhance the total internal reflection (TIR). Tungsten heavymet which contains about 92 - 95% tungsten and 5 - 8% non magnetic material (by weight) will be used as absorbing material. The tungsten absorber will make up 80% (by volume) of the active material of the forward calorimeter module. Each forward calorimeter will be contained in a stainless steel shell.

The scintillating liquid from each forward calorimeter module will be circulated through a filtration and purification system continuously to prevent excessive degradation of the liquid due to radiation damage. Each module will have a inlet manifold at the front end (facing the interaction point) and a discharge manifold at the back end. The filtration and purification systems for the scintillating liquid forward calorimeter will be placed in a utility room in the experiment hall. The scintillating liquid will be BC-5172 which has a

light mineral oil base with 5-15% pseudo cumine and a number of chemicals for further wave length shifting, Bis-MSB @0.1% and as a preservative.

The scintillation generated light in the capillaries will be collected at the back end of the super tower by the UVT plastic optical fibers across a small gap from the capillaries. Each tube will be extended into separate bore to prevent light mixing between the adjacent tube positions. Taper-end plastic optical fibers will be used for readout fibers at the end of each super tower. The large end (3 mm diameter) of the optical fiber will be aligned to each tube end to collect the scintillated light in the tube. The smaller end (1 mm diameter) of the optical fibers for each physics tower will be bundled into clusters and connected to the light mixers and/or photomultiplier tubes at the back end of the calorimeter. The readout fiber bundles will be designed to allow easy replacement of relatively small sections of radiation damaged fibers without draining the liquid from the forward calorimeter module.

Table 3. Characteristics and Parameters of the Forward Hadron Calorimeter
One Side Only

Inner radius of the system	:	41 mm
Outer radius of the system	:	706 mm
Length (including readout)	:	~2000 mm
Length of absorber	:	~1314 mm
Total weight (one side)	:	40 T
Weight of outer support tube	:	4 T
Weight of outer barrel passive absorber	:	~2 T
Weight of the Tungsten	:	~31 T
Tube Spacing	:	6.39 ± 0.13 mm
Copper tube Inside Diameter	:	2.7 ± 0.013 mm
Glass tube inside diameter	:	2.5 mm
Number of tubes	:	43,500 ea.
Tube length	:	1380 ± .8 mm
Total length of tubes required	:	60.1 km
Transport fiber length (average)	:	350 mm
Transport fiber diameter	:	Tapered 1-3 mm
Total number of transport fibers	:	43,500 ea.
Total length of transport fibers required	:	15.3 km
Number of longitudinal readout sections	:	1
Total number of readout channels	:	960 ea
Required photomultiplier tube gain	:	2000V
Time resolution	:	2.5 ns

D. Interface System Descriptions

A finite element analysis of the scintillating hadron barrel indicates that the constraining structural criteria is the amount of deflection resulting from the support of the liquid system and passive end caps. The predicted, maximum absolute deflection of the system is currently expected to be approximately 0.5 cm. This deflection will occur at the ends of the rails.

Connection of the support tube to the CDS will be accomplished via stand-off frames which are designed to accommodate the large cabling and piping bundles which will be routed through the CDS. The standoff frames will be welded to the scintillating barrel and bolted to the CDS in order to reduce the complexity of the assembly operations.

All the utilities and readout cabling for the tracker, noble liquid, forward and scintillating barrel will be routed around the outside of the barrel. The piping and cables will be embedded in grooves in a 100 mm layer of brass and covered with a stainless steel sheet metal shield. Final placement of the utilities will take place in the experimental hall.

GEM Detector
Scintillating Barrel Calorimeter

			Quantity	Units
20. 3. 2.	**Structural Tubes**			
20. 3. 2. 2. 1. 2. 1.	Outside Tube	SST	132,000	Kg
20. 3. 2. 2. 2. 2. 0.	End Flanges	SST	12,370	Kg
20. 3. 2. 2. 3. 2. 0.	Center Flanges	SST	12,370	Kg
20. 3. 2. 2. 4. 2. 0.	CDS Attachment	SST	30,680	Kg
20. 3. 3.	**Modules**			
20. 3. 3. 2. 1. 2. 0.	Absorber Plate	Brass	948,000	Kg
20. 3. 3. 2. 2. 1. 0.	WLS Fiber	WLS	1,280	M
20. 3. 3. 2. 2. 2. 0.	Trans. Fiber	Fiber	51,000	M
20. 3. 3. 2. 2. 3. 0.	Plastic Tile	Scintillating	770	M^2
20. 3. 3. 2. 2. 4. 0.	Mylar	Aluminized	1,540	M^2
20. 3. 3. 2. 2. 5. 0.	Tile Trays	Stainless St.	800	M^2
20. 3. 3. 2. 3. 1. 0.	Fasteners	Stainless ST	960	ea
20. 3. 3. 2. 3. 2. 0.	Banding Straps	Stainless ST	2,240	Meter
20. 3. 3. 2. 3. 3. 0.	Side Plates	16 GA. Stain.	4,500	Kg
20. 3. 3. 2. 3. 4. 0.	Spacers	Brass	756	M
20. 3. 3. 2. 3. 5. 0.	Protective Film	Mylar	1,540	M^2
20. 3. 4.	**Readout**			
20. 3. 4. 2. 1. 2. 1. 0	Photomultiplier Tubes		640	ea
20. 3. 4. 2. 1. 2. 2. 0	Individual PMT Structure		640	ea
	1 Tube	Aluminum	1	ea
	2 Spring	Stainless Steel	1	ea
	3 Clamp	Aluminum	1	ea
	4 Light Mixer	Acrylic	1	ea
20. 3. 4. 2. 1. 2. 3. 0	PMT Group Framing		80	ea
	1 Fiber Align. Fixture	Aluminum	1	ea
	2 Square Tube	Aluminum	1	ea
	3 Collet Jaws	Aluminum	9	ea
	4 Alignment Flange	Aluminum	1	ea
	5 J-box	Stainless Steel	1	ea
	6 Collet Screw	#6-32	9	ea
	7 Clamp Screw	#3-48	9	ea

20. 3. 4. 2. 2. 0. 0. 0	Electronics			
20. 3. 4. 2. 2. 2. 1. 0	Local Electronics		640	ea
20. 3. 4. 2. 2. 2. 2. 0	Base		640	ea
20. 3. 4. 2. 2. 2. 3. 0	Cabling/conn.		640	ea
20. 3. 5.	**Out. Barrel Pass. Absorber**			
20. 3. 5. 2. 0. 0. 0.	Material	Brass	223,490	Kg
20. 3. 6.	**Noble Liquid Install. Rails**			
20. 3. 6. 2. 0. 0. 0.	Material	Tool Steel	14,310	Kg

GEM Detector
Calorimeter Passive End Caps

20. 6. 2.	Passive End Caps		Quantity	Units
20. 6. 2. 1.	North			
20. 6. 2. 1. 1. 1.	Absorber Plate	Copper/Brass	73,600	Kg
20. 6. 2. 1. 1. 2.	Center Tube	Copper/Brass	6,620	Kg
20. 6. 2. 1. 1. 3.	Fasteners	Stainless Steel	120	ea
20. 6. 2. 2.	South			
20. 6. 2. 2. 2. 1.	Absorber Plate	Copper/Brass	73,600	Kg
20. 6. 2. 2. 2. 2.	Center Tube	Copper/Brass	6,620	Kg
20. 6. 2. 2. 2. 3.	Fasteners	Stainless Steel	120	ea

Hadronic Forward Calorimeter Materials

(for 2 Scintillating Liquid Forward Calorimeters)

Scintillator Section

Material	Quantity	Units
3 mm Copper Tubes	390,415	ft
2.7 mm Glass Tubes	390,415	ft
Tungsten Absorber	132,276	lbs
Inlet Manifold End Plates	2	ea
Exit Manifold End Plates	2	ea
Inlet Manifold	2	ea
Exit Manifold	2	ea
Manifold Flanges	736	ea
Fused Quartz Window	736	ea
SS Jacket	2	ea

Readout Section

Material	Quantity	Units
Readout Fiber End Plates	736	ea
Quartz Readout Fibers (300 micron CD)	696,760	ft
Light Mixers	736	ea
Photomultiplier Tubes (PMT)	736	ea
PMT Base	736	ea
PMT HV Power Supply & Cabling	736	ea
Preamps	736	ea
PMT Compartment	736	ea
Fastener	5,952	ea

Hadronic Forward Calorimeter Materials

(for 2 Scintillating Liquid Forward Calorimeters)

Structural Components

Material	Quantity	Units
Structural Ring	2	ea
Studs	128	ea
Liquid Piping on FCAL Ring (5 cm OD)	1,000	ft
Elbows for 5 cm Pipe	128	ea
Flanges for 5 cm Pipe	40	ea
PMT Support Structure	2	ea
Thermal Dome	2	ea
Passive Absorber(Cu)	3,946	lbs
fastener	300	ea

Auxiliary System

Material	Quantity	Units
Scintillating Liquid	6,600	liters
Liquid Piping in Hall (10 cm)	3,000	ft
Elbows for 10 cm Pipe	40	ea
Flanges for 10 cm Pipe	20	ea
Valves	10	ea
Liquid Handling Pumps (complete set)	2	ea
Storage & Monitoring Equip	1	ea
Filtering & Purification Equip	1	ea
Bolts	240	ea
Thermal Control Air Duct	300	ft

Calibration System

Material	Quantity	Units
Calibration Drive Assembly	2	ea
Calibration Electronics	1	ea

2. Milestones and Schedule

The following list of milestones are based on the current GEM schedule. As the design of the GEM detector progresses the milestone dates will be adjusted. Of particular concern are DOE budgetary constraints which may effect the start-up date for the SSC.

Collaborating institutes will be requested to provide detailed manufacturing and assemlby schedules for inclusion in the overall GEM schedule which will be maintained by the SSCL. See Section 7. Communications, concerning schedule reporting.

A. Overall GEM Schedule Milestones

Complete GEM Baseline II concept and TDR	April 1993
Complete DOE and SSCL Reviews of GEM detector	October 1993
Receive DOE approval to begin fabrication	May 1994
Begin Installation of GEM in experimental hall	October 1996
GEM detector commisioning	February 2002
SSCL Beam Line commissioning	March 2002

B. Production Milestones

Scintillating Barrel:

Discuss Production plans with collaborators	January-June 1993
Complete final production plans with collaborators	June-December 1993
Complete manufacturing pre-prod. module	November 1994
Install module prototype for Fermi test	March 1995
Complete Manufacturing Design	November 1994
Begin full scale manufacturing	April 1996
Begin Barrel Structure Assembly @ SSCL	May 1995
Complete scintillating modules and barrel fabrication	August 1996
Begin module installation	August 1996
Complete scintillating barrel assembly (at SSCL)	July 1997
Install barrel in experimental hall	Sepember 1997

Passive End Caps:

Begin preproduction fabrication	January 1997
Begin Full-scale Manufacturing	June 1997
Complete Passive End Cap Component Fabrication	June 1998
Compete Passive End Cap Assembly (at SSCL)	September 1998
Insert forward hadron in passive end caps	October 1998
Install Passive End Caps/Forward in Experimental Hall	July 1998

Forward Hadron:

Complete manufacturing design	May 1996
Begin PreProduction Manufacturing	June 1996
Begin full scale manufacturing	December 1996
Complete two forward hadron systems	December 1997
Complete Beam Test Assembly at Fermi	March 1998
Complete Final Assemlby @ SSCL	June 1998
Install Forward Systems (with Passive End Caps)	July 1998

3. Conceptual Design Figures

Conceptual design drawings of the GEM detector and the external calorimeter subsystem are attached. The figures define the current status of the detector design development and represent the GEM detector configuration as shown in the Technical Design Report (May 1993) which is the first major design report to the SSCL and the United States Department of Energy. Future changes in the detector design will be made through a formal change control process. The drawings are being converted to the SSCL format and will be filed at the SSCL as part of the design control system.

Collaborators involved in the manufacturing and assembly of the external calorimeter systems will be expected to participate in the completion of the final design of the detector. Consequently, these organizations will be required integrate their design activities such as drawing production and specification review into the overall GEM engineering organization. Engineering is discussed in more detail in Section 9.

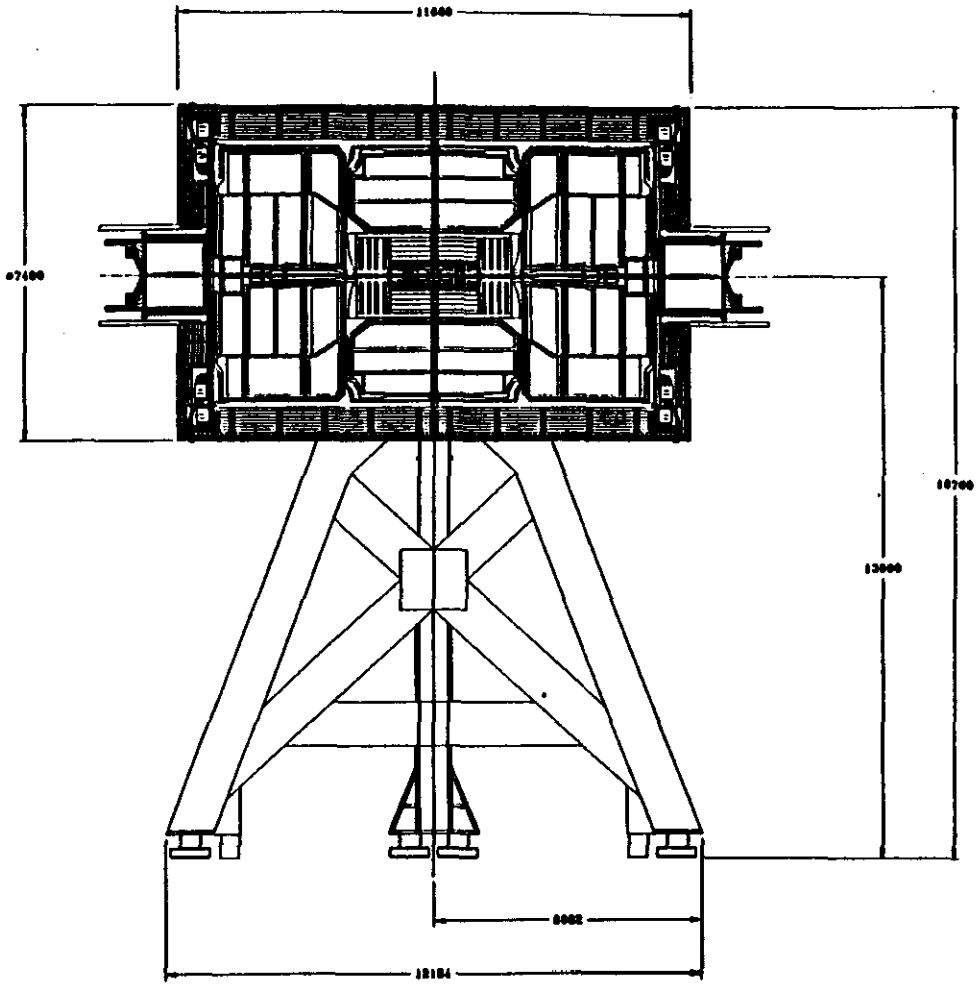

DIMENSIONS ARE IN MILLIMETERS UNLESS OTHERWISE SPECIFIED

TOLERANCES (Except as Specified)

OVER	UNDER	TOLERANCE
0	2.999	±0.15
3	5.999	±0.2
6	29.999	±0.3
30	119.999	±0.5
120	399.999	±0.8
400	999.999	±1
1000	2999.999	±3
3000	7999.999	±5
8000		±10
ANGLES		±0°

DO NOT SCALE DRAWING

DO NOT REVISE MANUALLY

ORIGINAL ISSUE

GEM DETECTOR
CALORIMETER
ASSEMBLY IN CDS SHT 1

A002

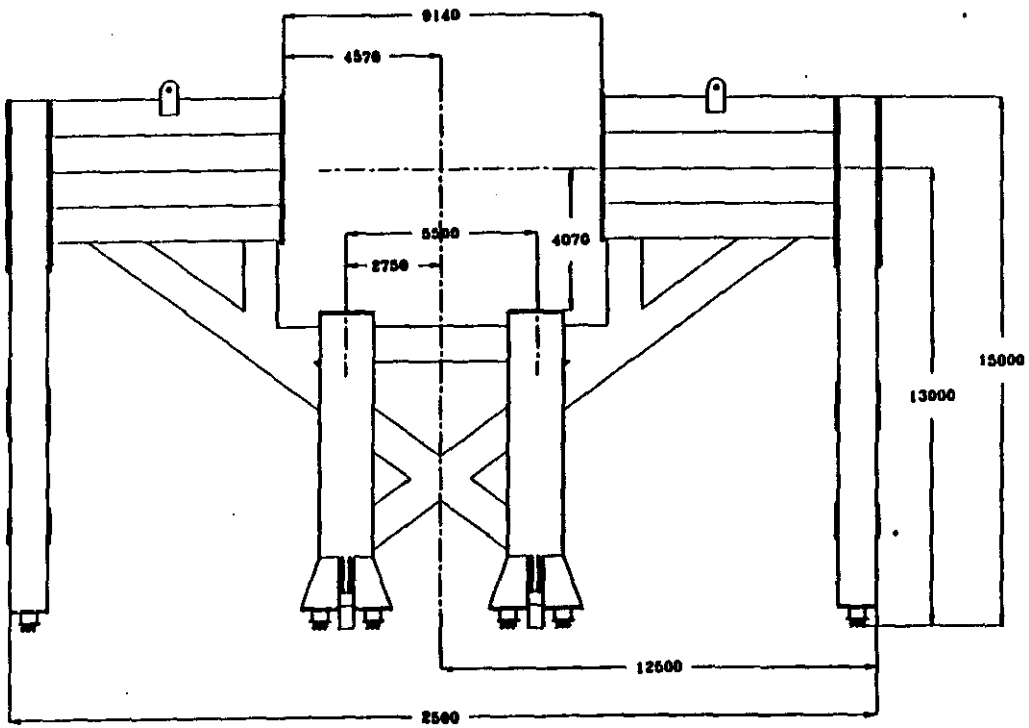

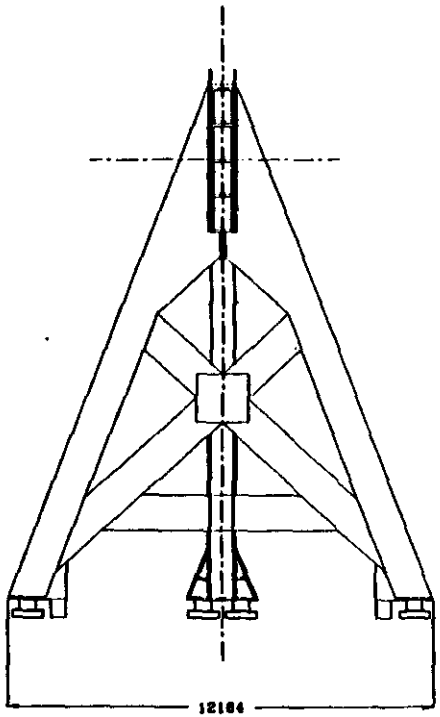

GEM DETECTOR
CALORIMETER
CENTRAL DETECTOR SUPPORT

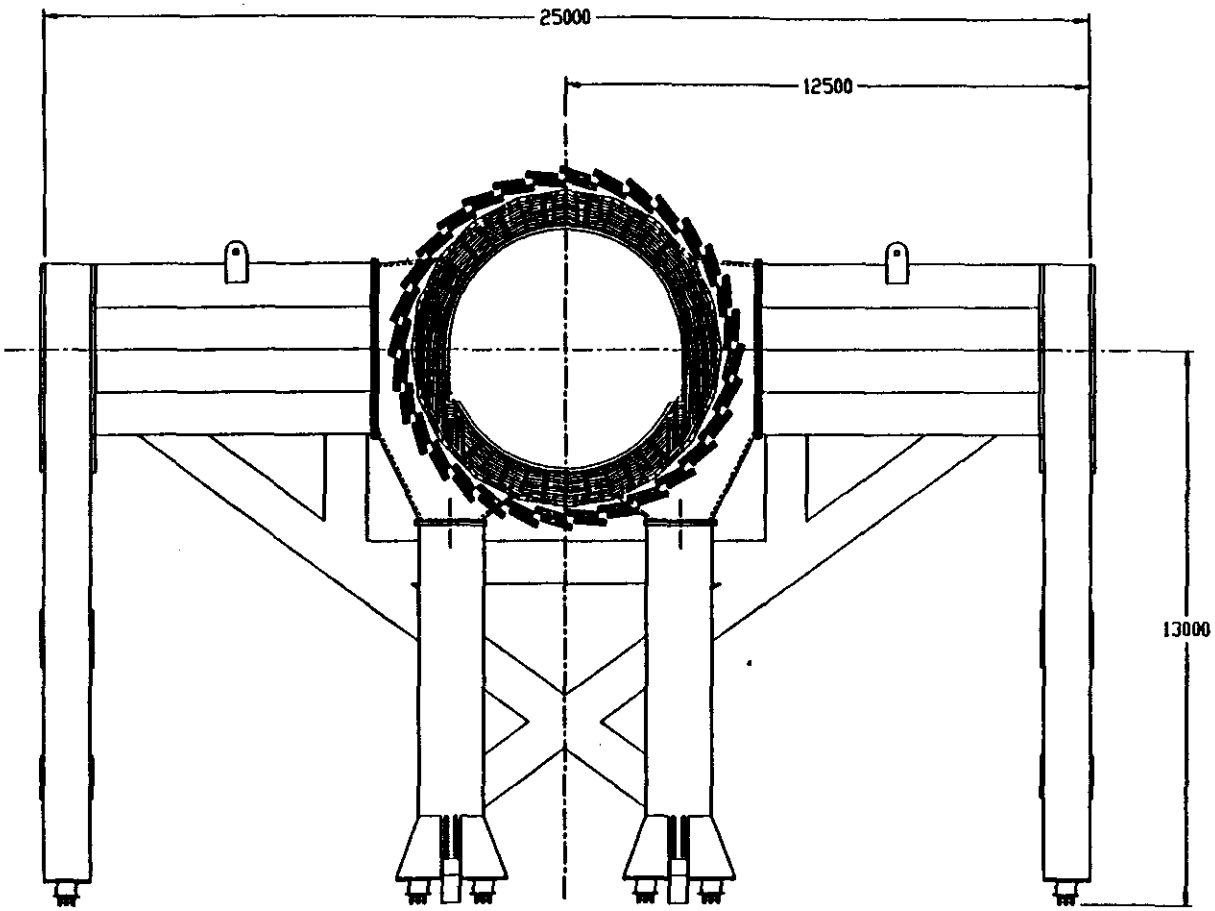

GEN DETECTOR
BARREL SCINTILLATING CALORIMETER
ASSEMBLY IN CDS SHT 2

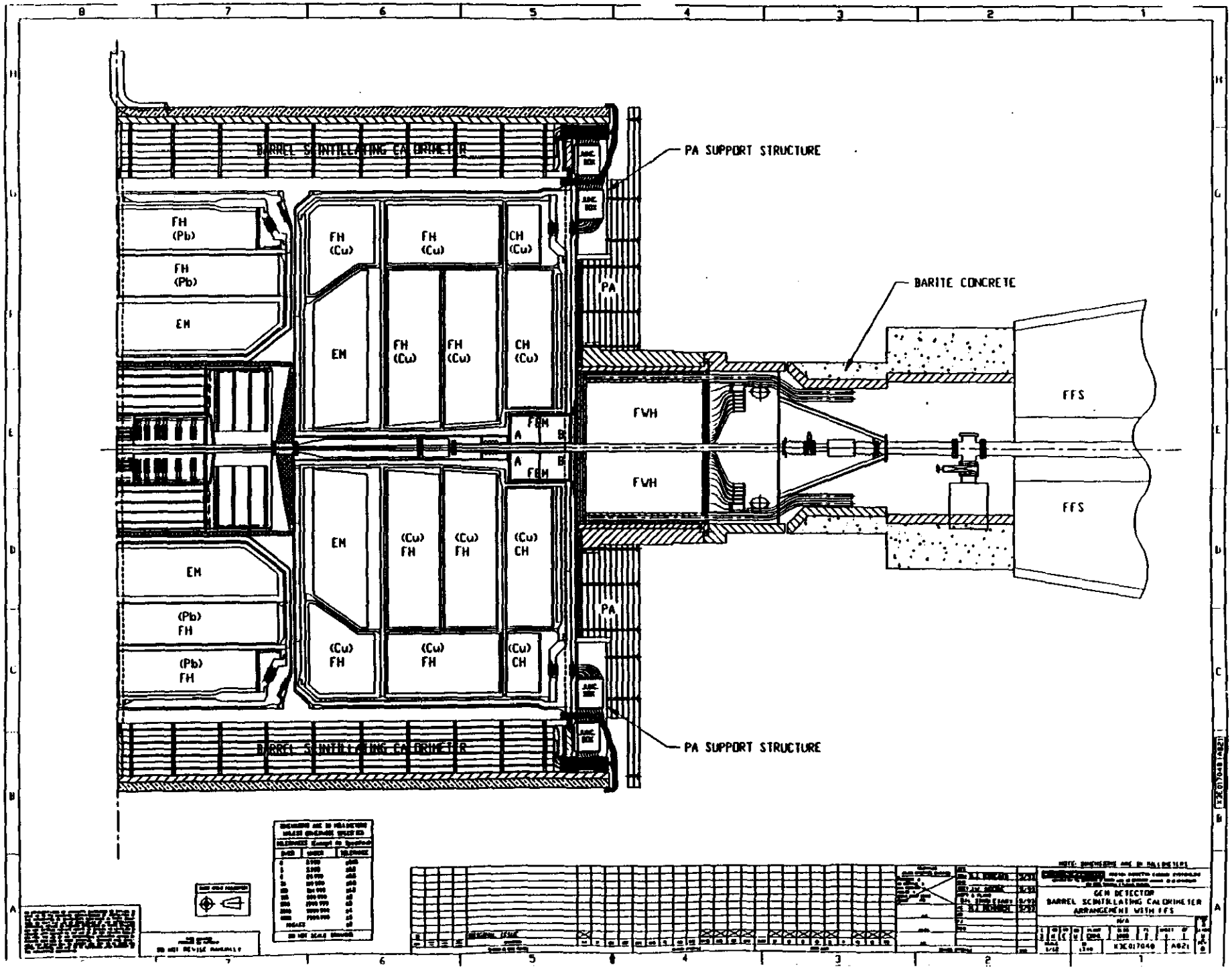
BARREL SCINTILLATING CALORIMETER
PA SUPPORT STRUCTURE
BARITE CONCRETE
FH (Pb)
FH (Pb)
EM
FH (Cu)
FH (Cu)
CH (Cu)
EM
FH (Cu)
FH (Cu)
CH (Cu)
PA
FWH
FWH
FFS
FFS
A
B
EM
(Cu) FH
(Cu) FH
(Cu) CH
EM
(Pb) FH
(Pb) FH
(Cu) FH
(Cu) FH
(Cu) CH
PA
BARREL SCINTILLATING CALORIMETER
PA SUPPORT STRUCTURE
GEM DETECTOR
BARREL SCINTILLATING CALORIMETER
ARRANGEMENT WITH FFS
KXC017040
A021

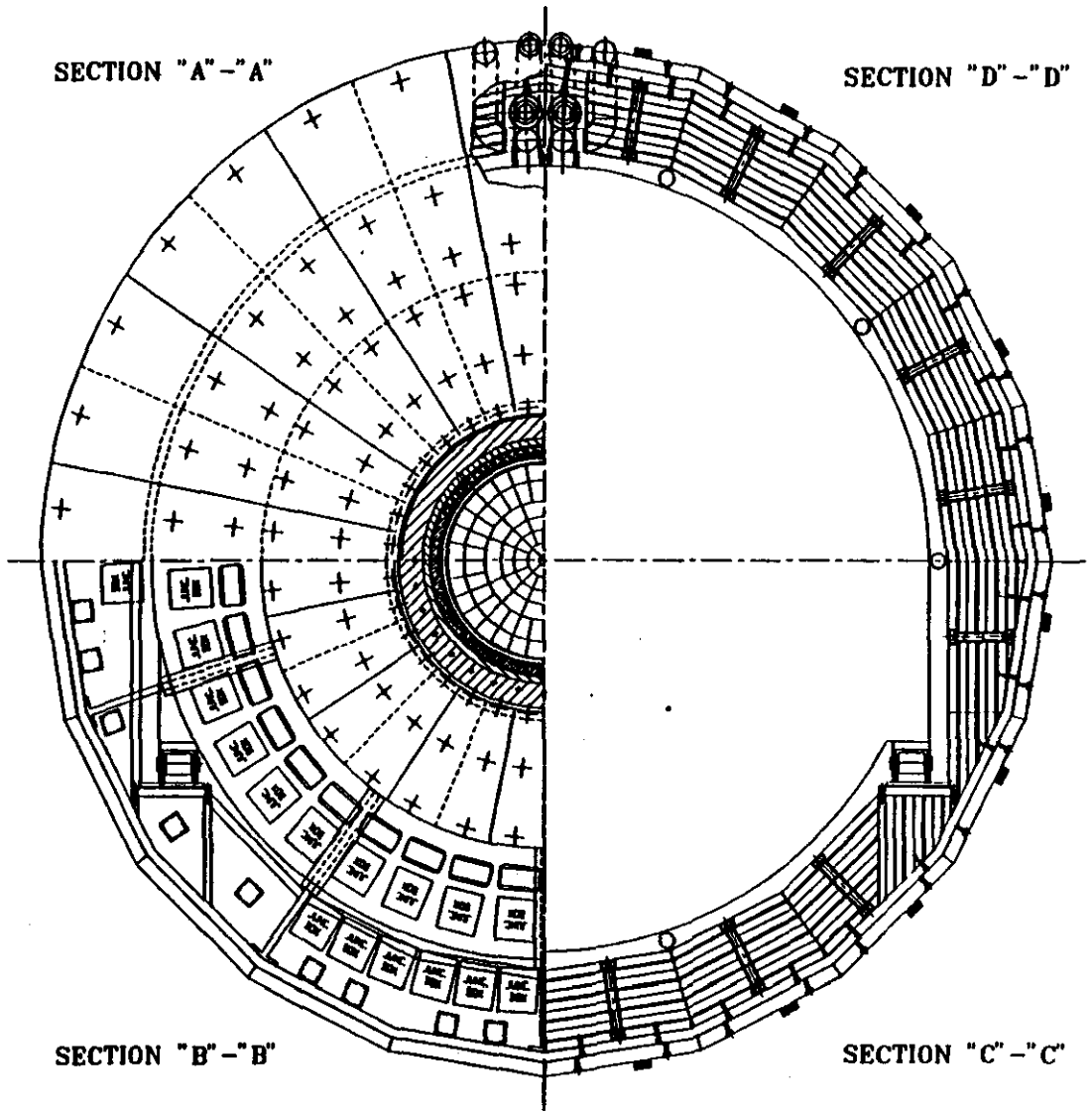

SECTIONS TAKEN FROM DWG. A604

GEM DETECTOR
BARREL SCINTILLATING CALORIMETER
END VIEW QUARTER SECTIONS

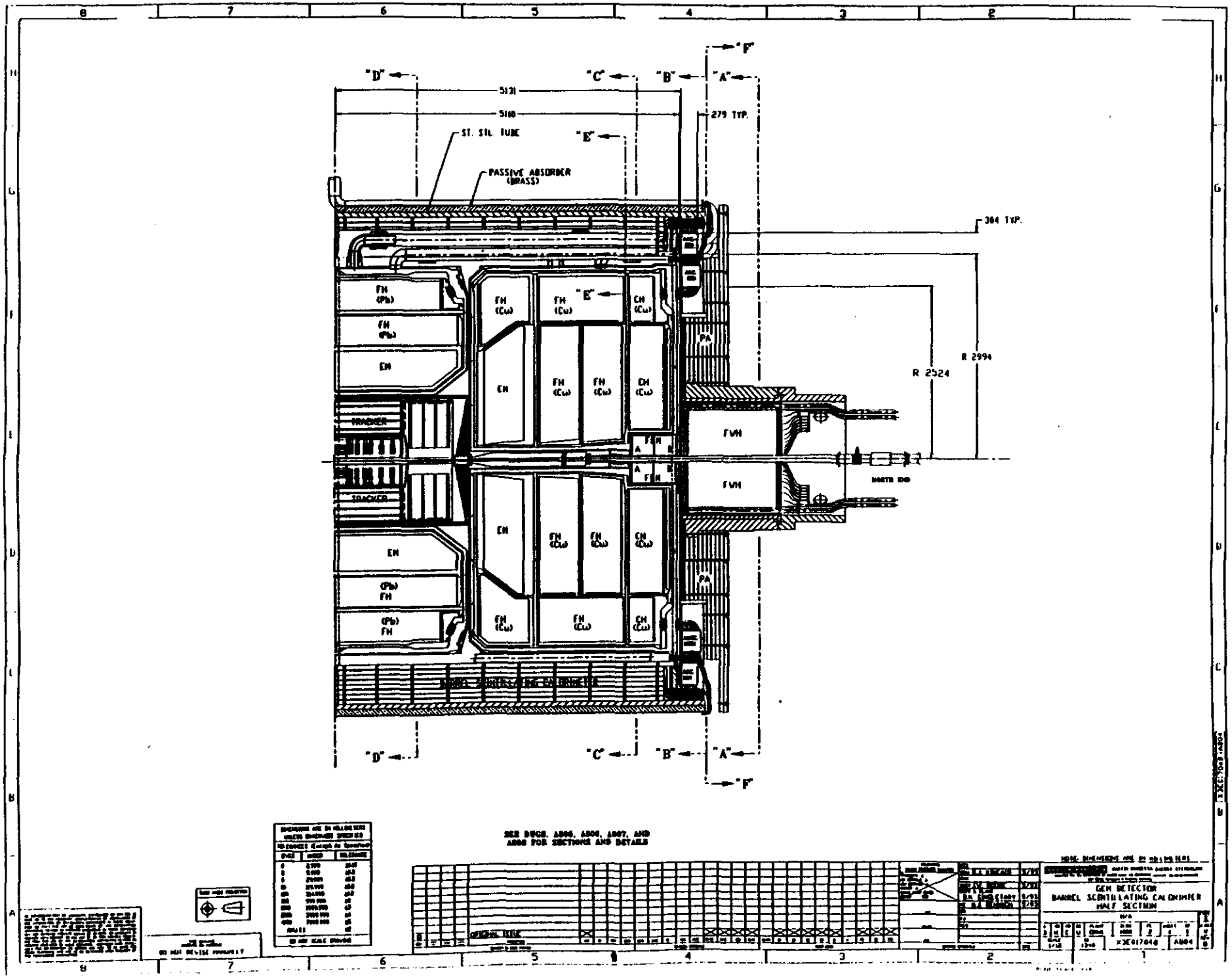
"D"
"C"
"B"
"A"
"F"
"E"
5131
5100
279 TYP.
ST. STL. TUBE
PASSIVE ABSORBER (BRASS)
384 TYP.
R 2994
R 2524
FH (Pb)
EM
TRACKER
FH (Cu)
CH (Cu)
PA
FVH
FEM
(Pb) FH
GEM DETECTOR
BARREL SCINTILLATING CALORIMETER
HALF SECTION
SEE DWGS. A006, A005, A007, AND A008 FOR SECTIONS AND DETAILS
X-E017040
A004

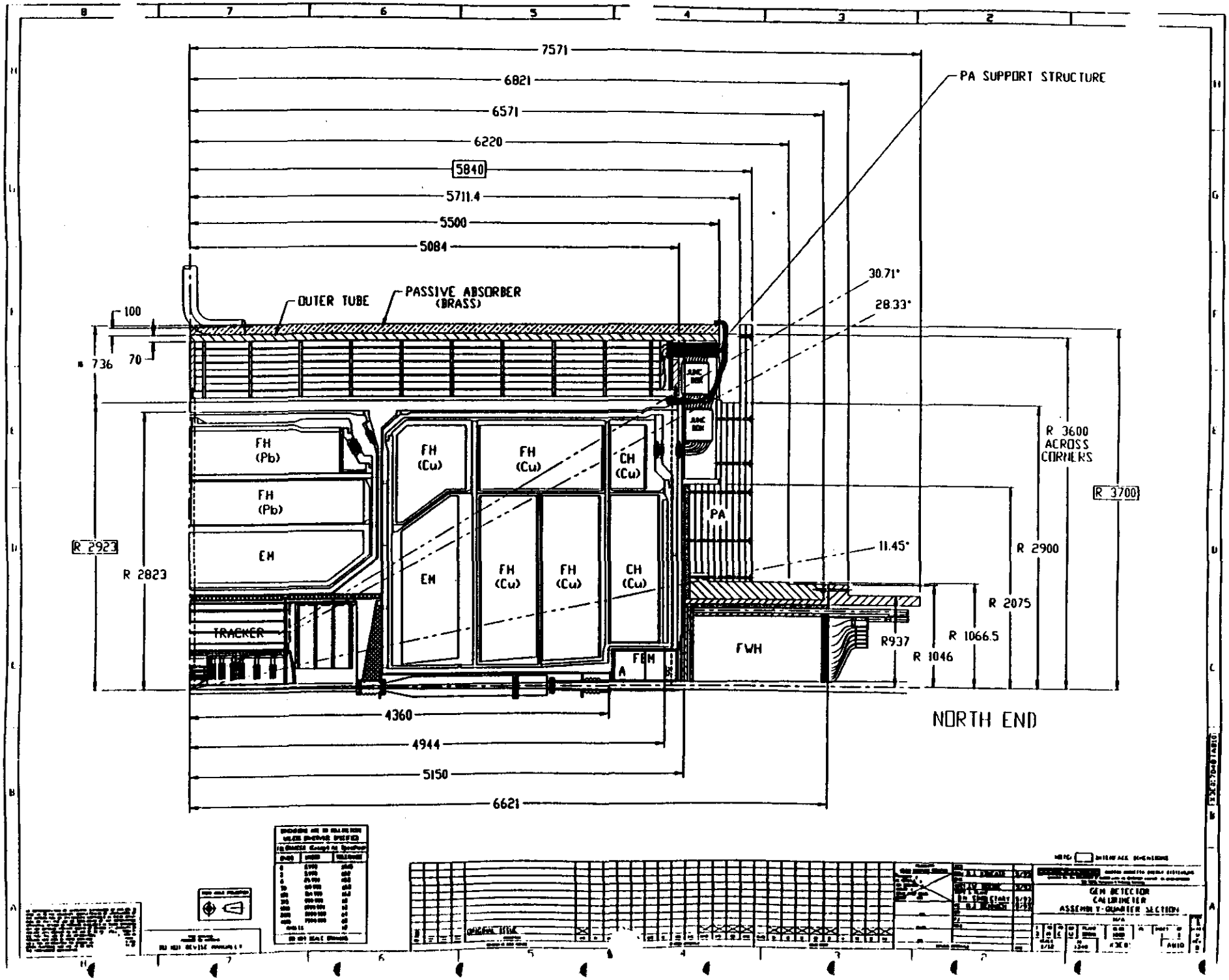
7571
6821
6571
6220
5840
5711.4
5500
5084
PA SUPPORT STRUCTURE
30.71°
28.33°
OUTER TUBE
PASSIVE ABSORBER
(BRASS)
100
70
736
FH
(Pb)
FH
(Pb)
EM
FH
(Cu)
FH
(Cu)
CH
(Cu)
EM
FH
(Cu)
FH
(Cu)
CH
(Cu)
PA
R 3600
ACROSS
CORNERS
R 3700
R 2923
R 2823
11.45°
R 2900
R 2075
R 1066.5
R937
R 1046
TRACKER
FEM
A
FWH
4360
4944
5150
6621
NORTH END
GEM DETECTOR
CALIBRATION
ASSEMBLY-QUARTER SECTION

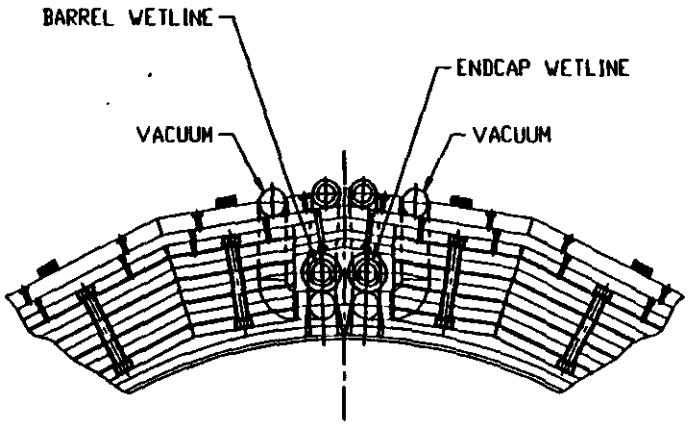

SECTION "E"-"E"

TAKEN FROM DWG A804
NORTH LOOKING SOUTH

NOTE: DIMENSIONS ARE IN MILLIMETERS

GEM DETECTOR
BARREL SCINTILLATING CALORIMETER
SECTIONS AND DETAILS

A808

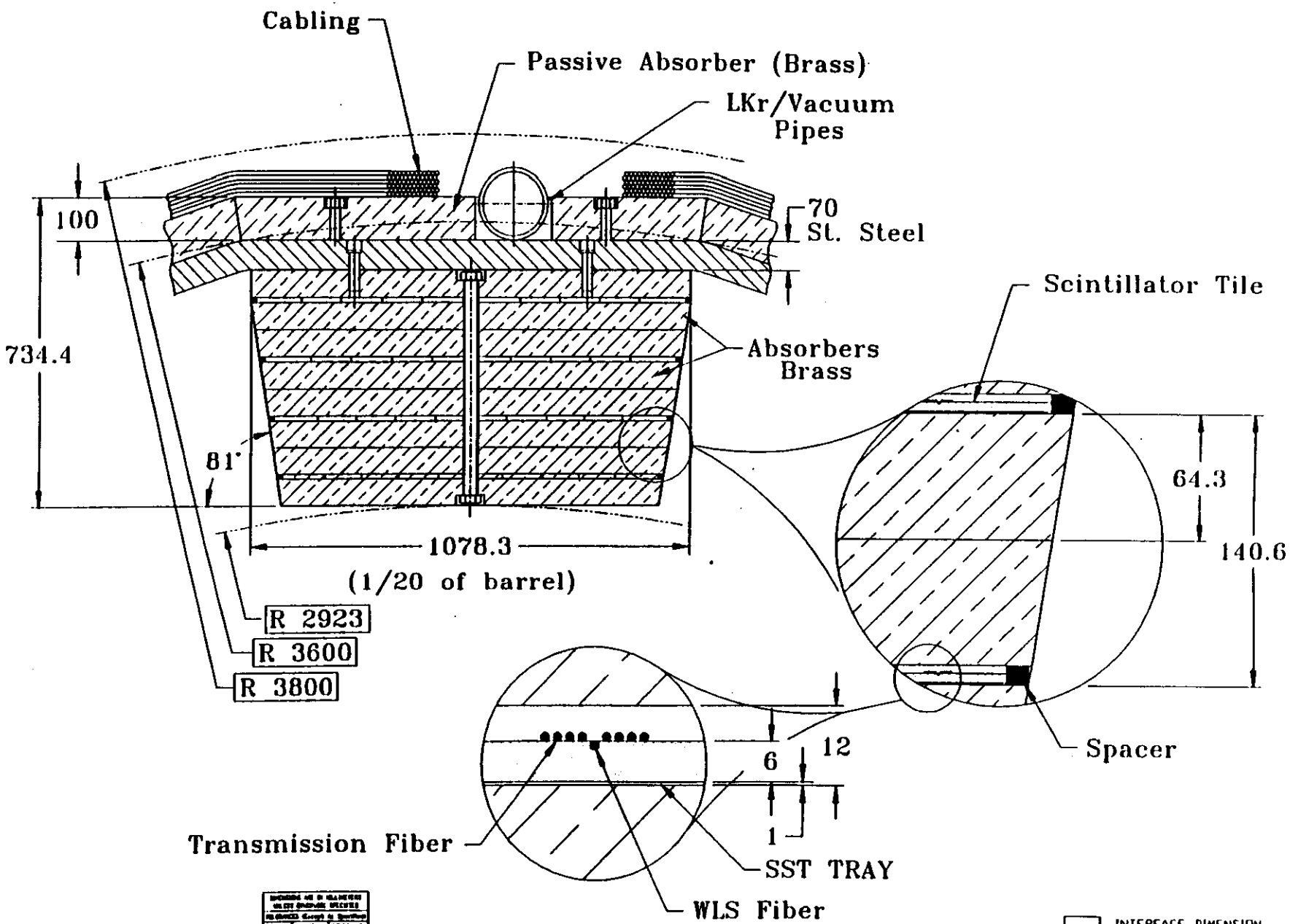
Cabling
Passive Absorber (Brass)
LKr/Vacuum Pipes
100
70
St. Steel
734.4
Absorbers Brass
Scintillator Tile
81°
64.3
140.6
1078.3
(1/20 of barrel)
R 2923
R 3600
R 3800
Spacer
12
6
1
Transmission Fiber
SST TRAY
WLS Fiber
INTERFACE DIMENSION

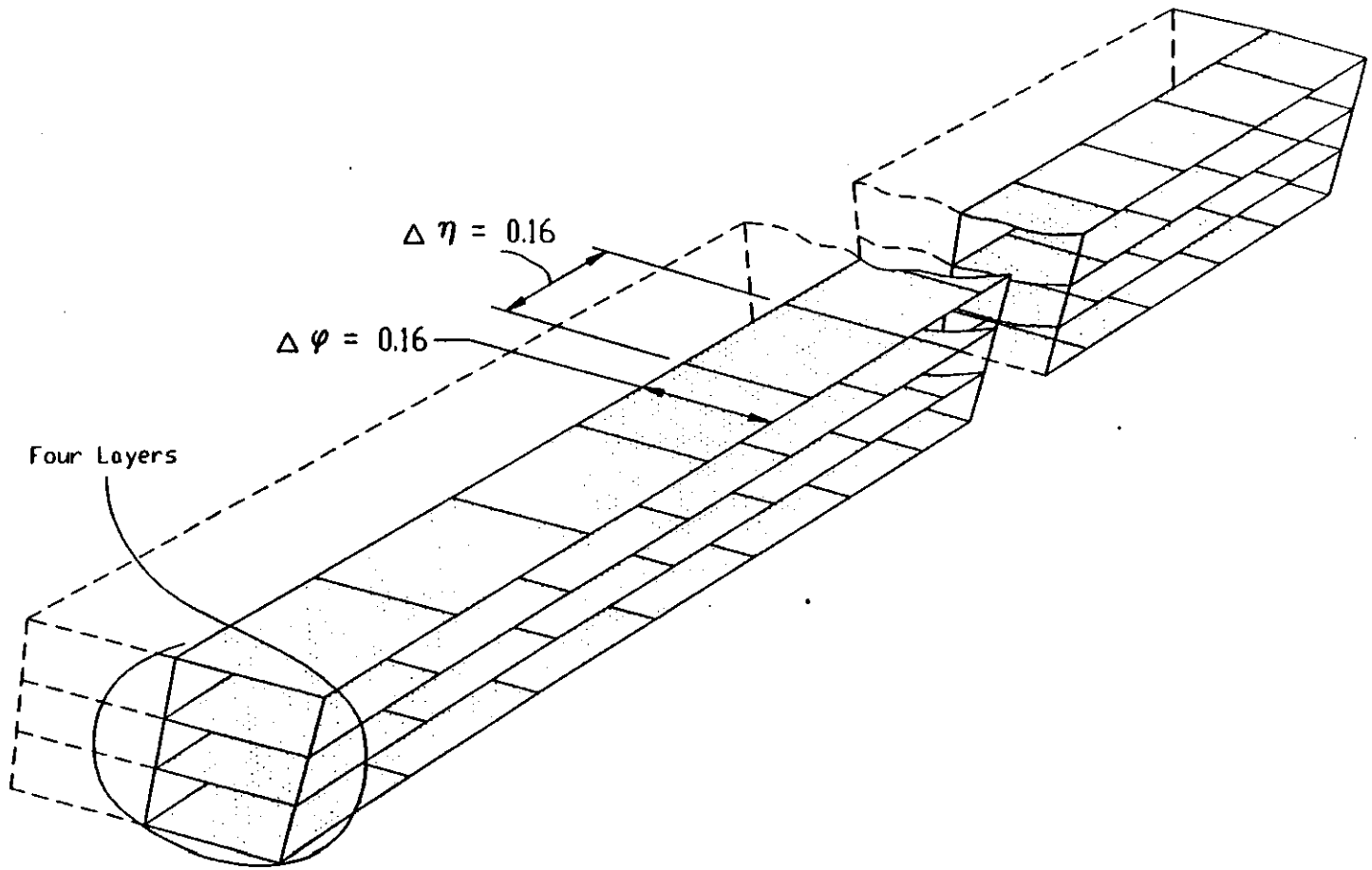

GEM DETECTOR
BARREL SCINTILLATING CALORIMETER
MODULE TILE ISOMETRIC LAYOUT

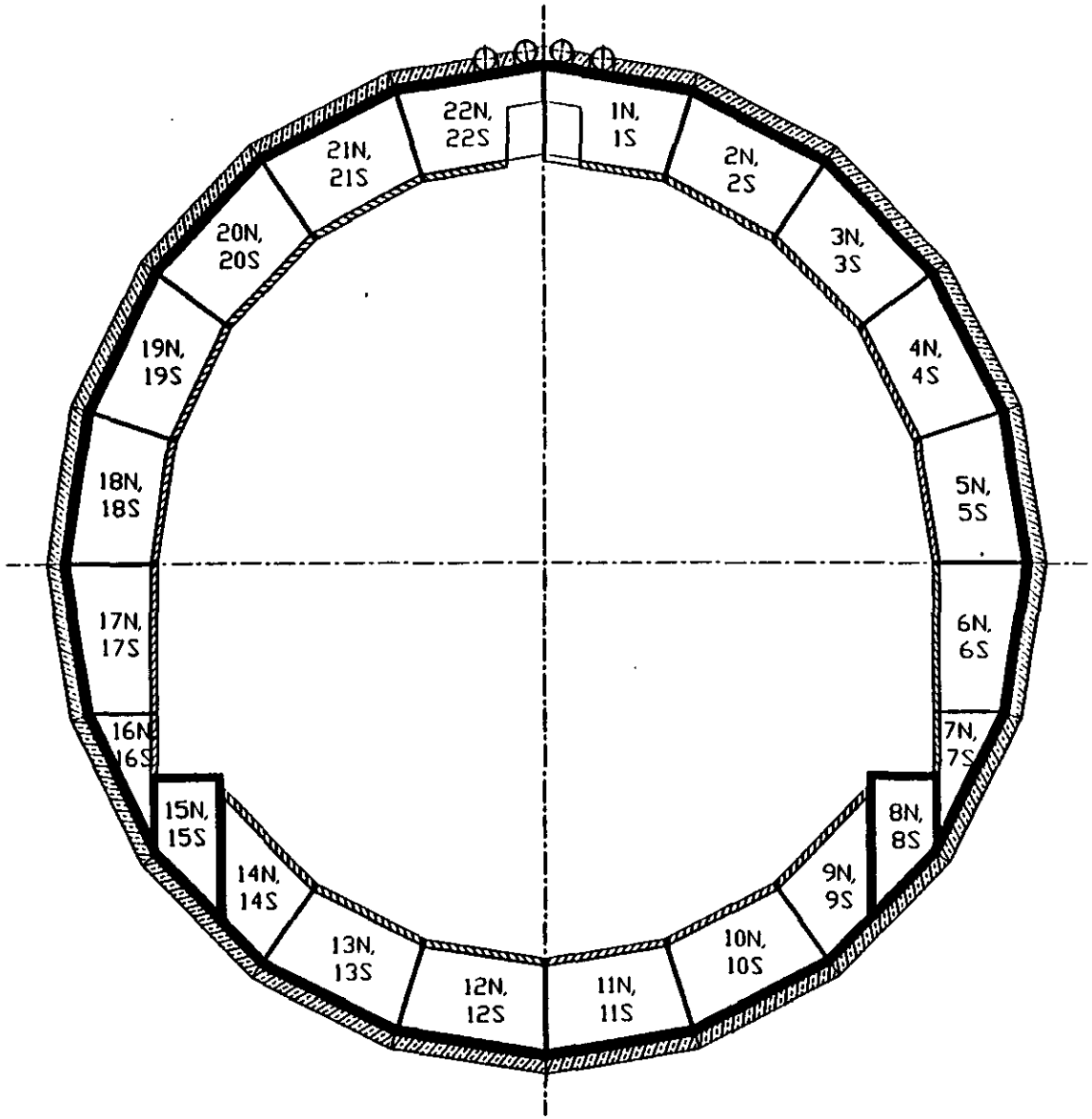

VIEW LOOKING SOUTH FROM NORTH

GEN DETECTOR
BARREL SCINTILLATING CALORIMETER
MODULE DESIGNATIONS

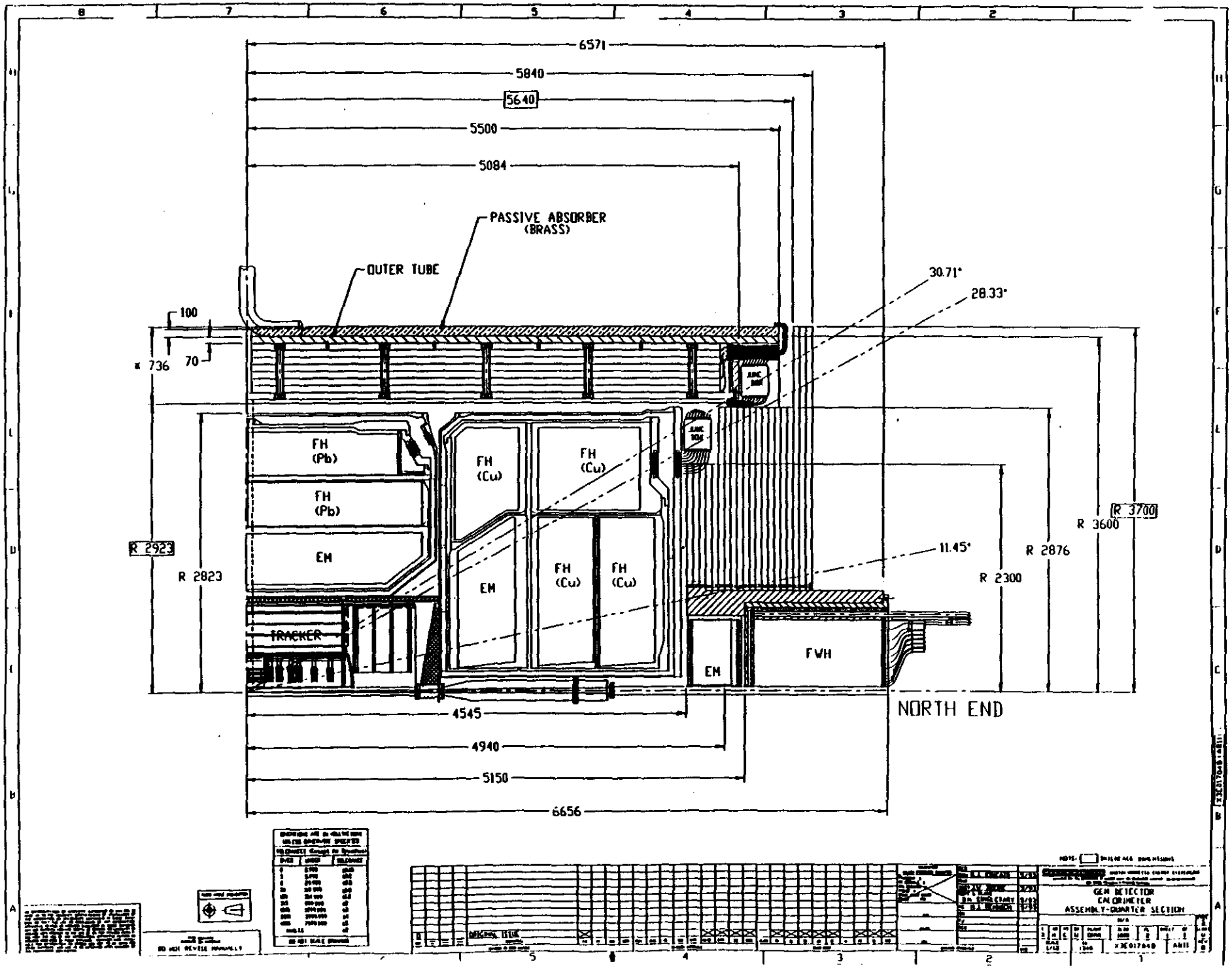
6571
5840
5640
5500
5084
PASSIVE ABSORBER
(BRASS)
OUTER TUBE
30.71°
28.33°
100
70
736
FH
(Pb)
FH
(Pb)
EM
FH
(Cu)
FH
(Cu)
EM
FH
(Cu)
FH
(Cu)
EM
FWH
TRACKER
R 2923
R 2823
R 3700
R 3600
R 2876
R 2300
11.45°
NORTH END
4545
4940
5150
6656
GEM DETECTOR
CALORIMETER
ASSEMBLY-QUARTER SECTION

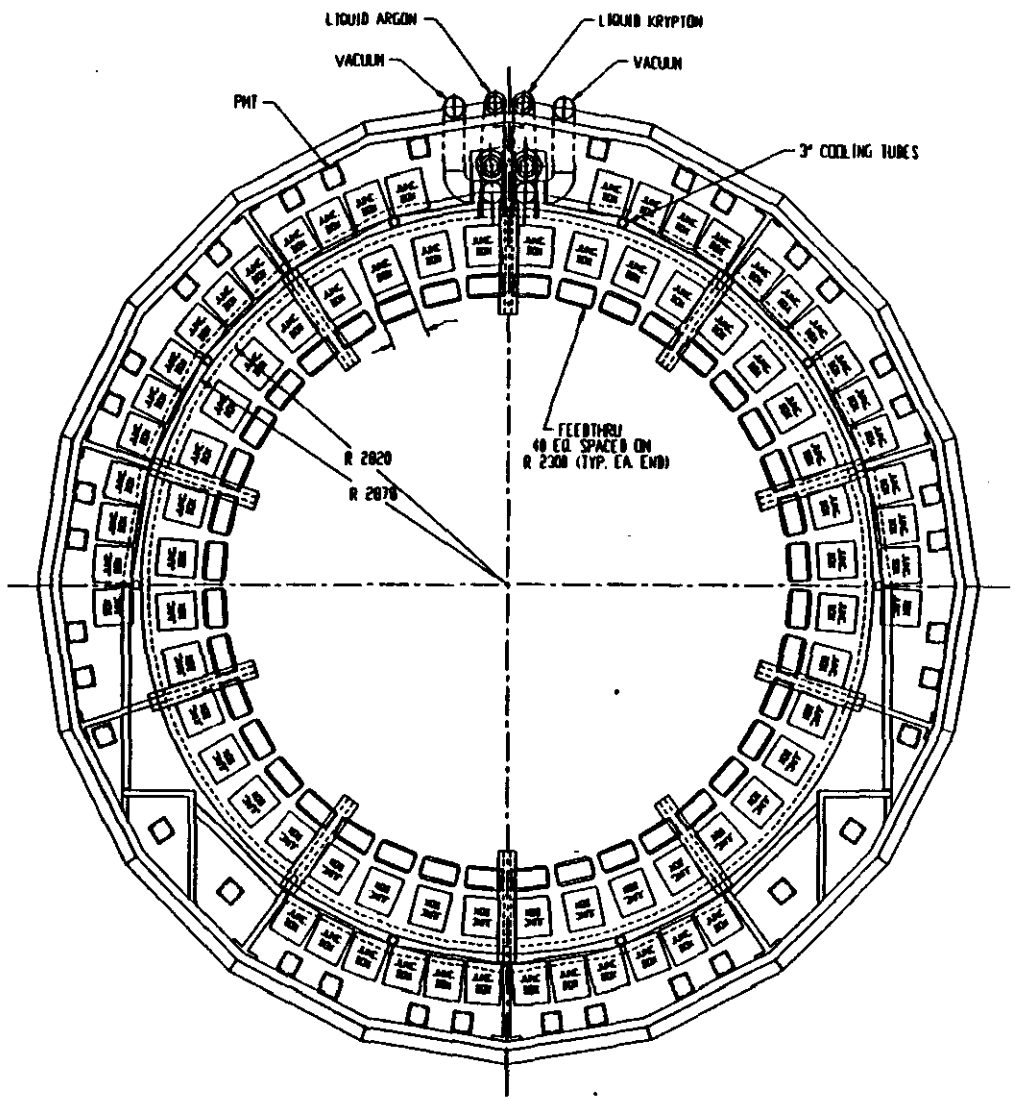

SECTION "B" - "B"
TAKEN FROM DWG. A004

GEM DETECTOR
BARREL SCINTILLATING CALORIMETER
JUNCTION BOX LAYOUT

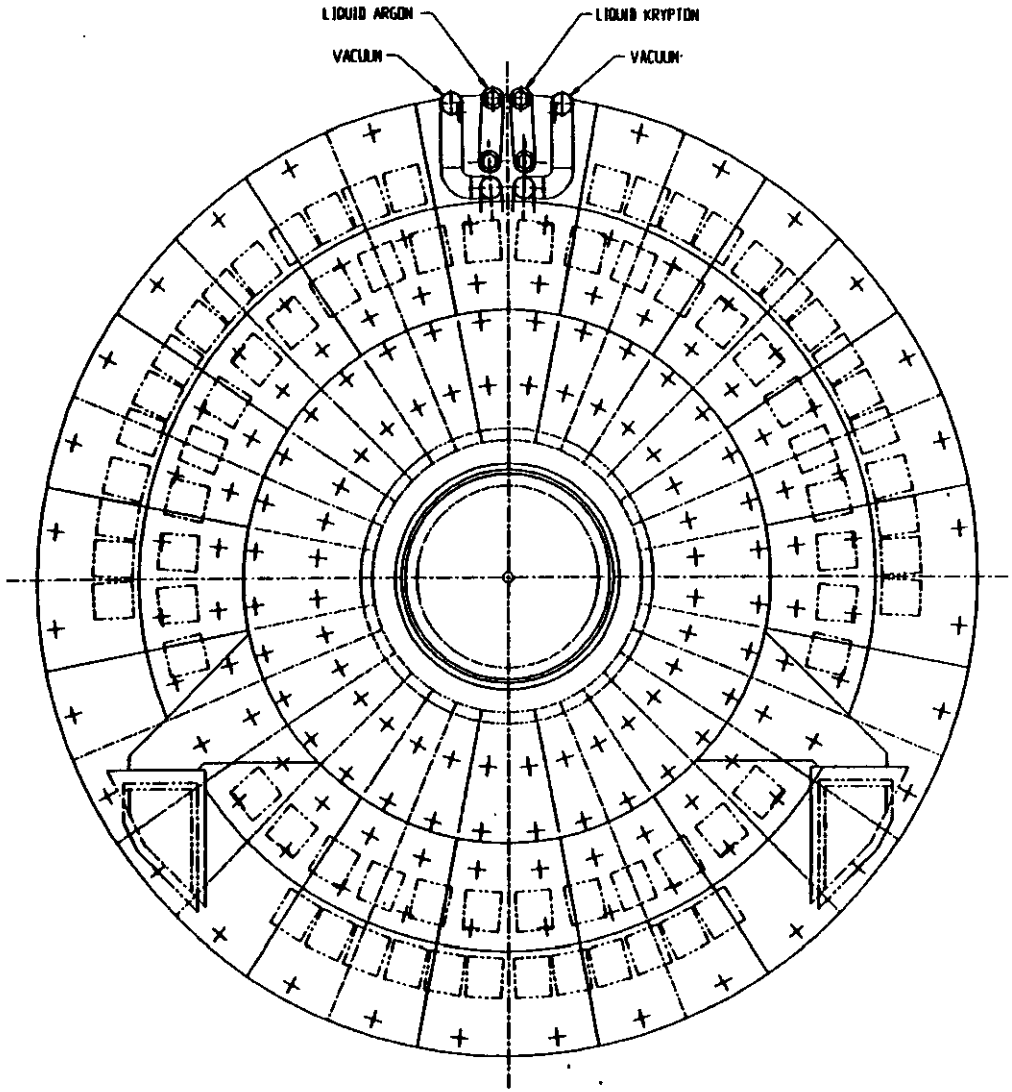

SECTION "F" - "F"

TAKEN FROM DWG. A804

GEM DETECTOR
BARREL SCINTILLATING CALORIMETER
SECTION "F" - "F"

KXE017049

A007

223

Scintillating Hadron Calorimeter Barrel

Conceptual Design Drawings

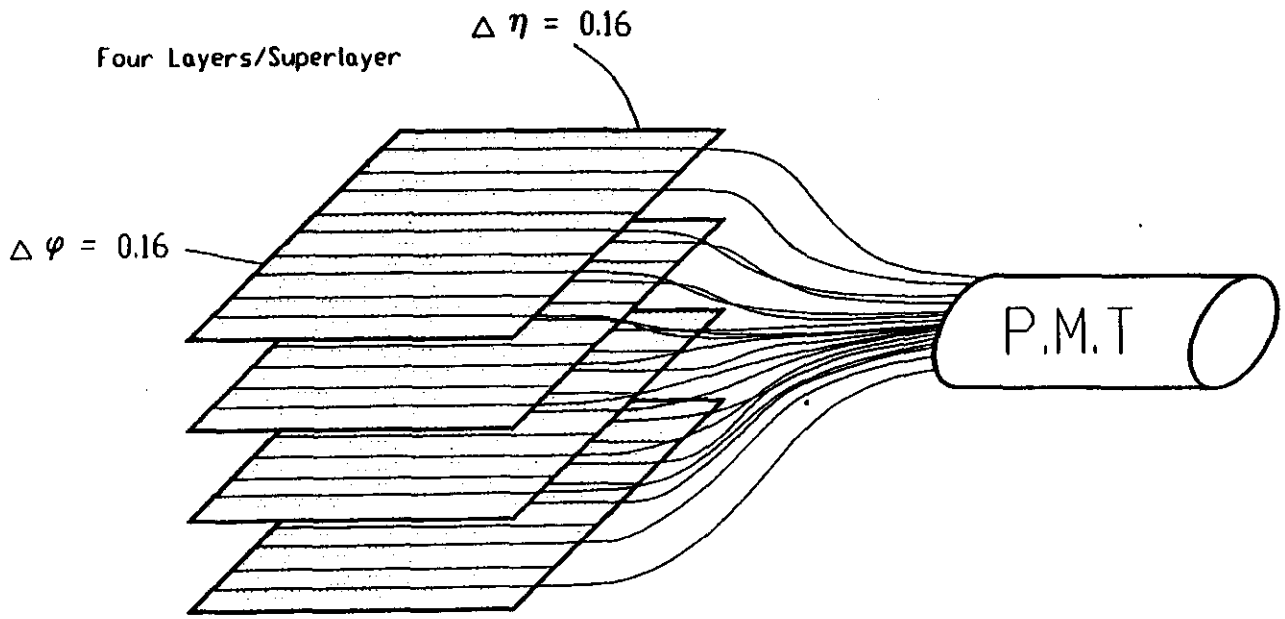
Δ η = 0.16
Four Layers/Superlayer
Δ φ = 0.16
P.M.T

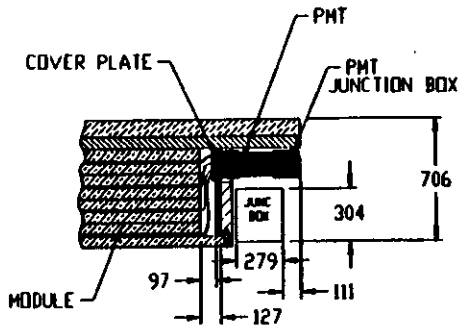

SECTION 'A' - 'A'

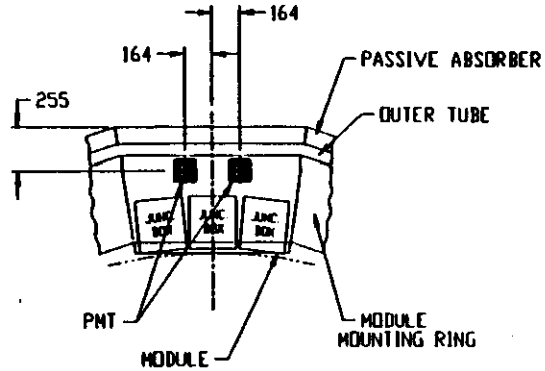

SECTION 'B' - 'B'

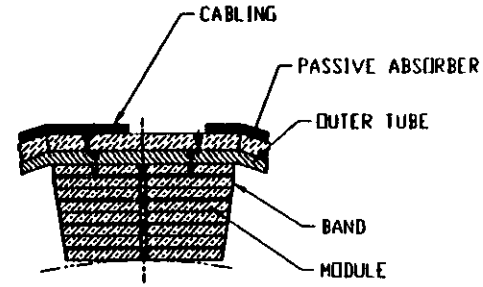

SECTION 'C' - 'C'

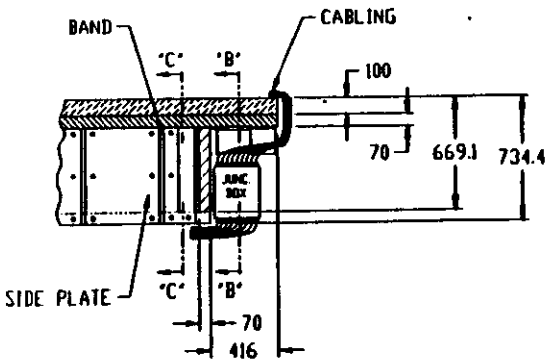

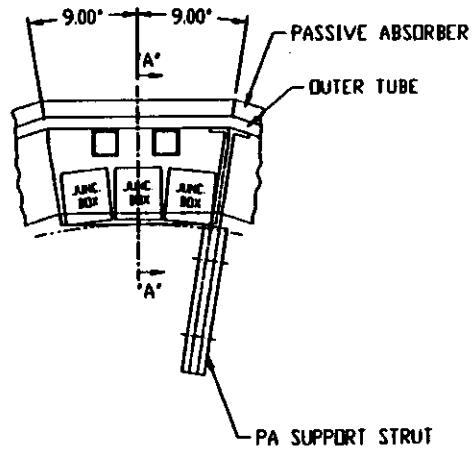

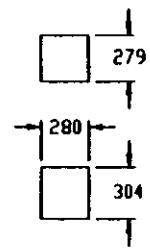

JUNCTION BOX

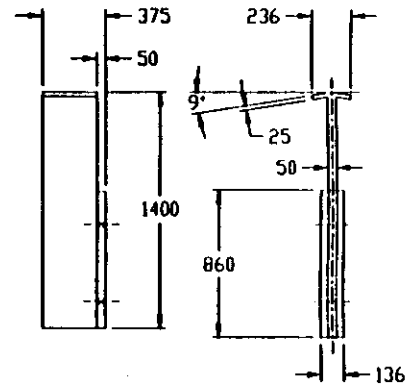

PA SUPPORT STRUT

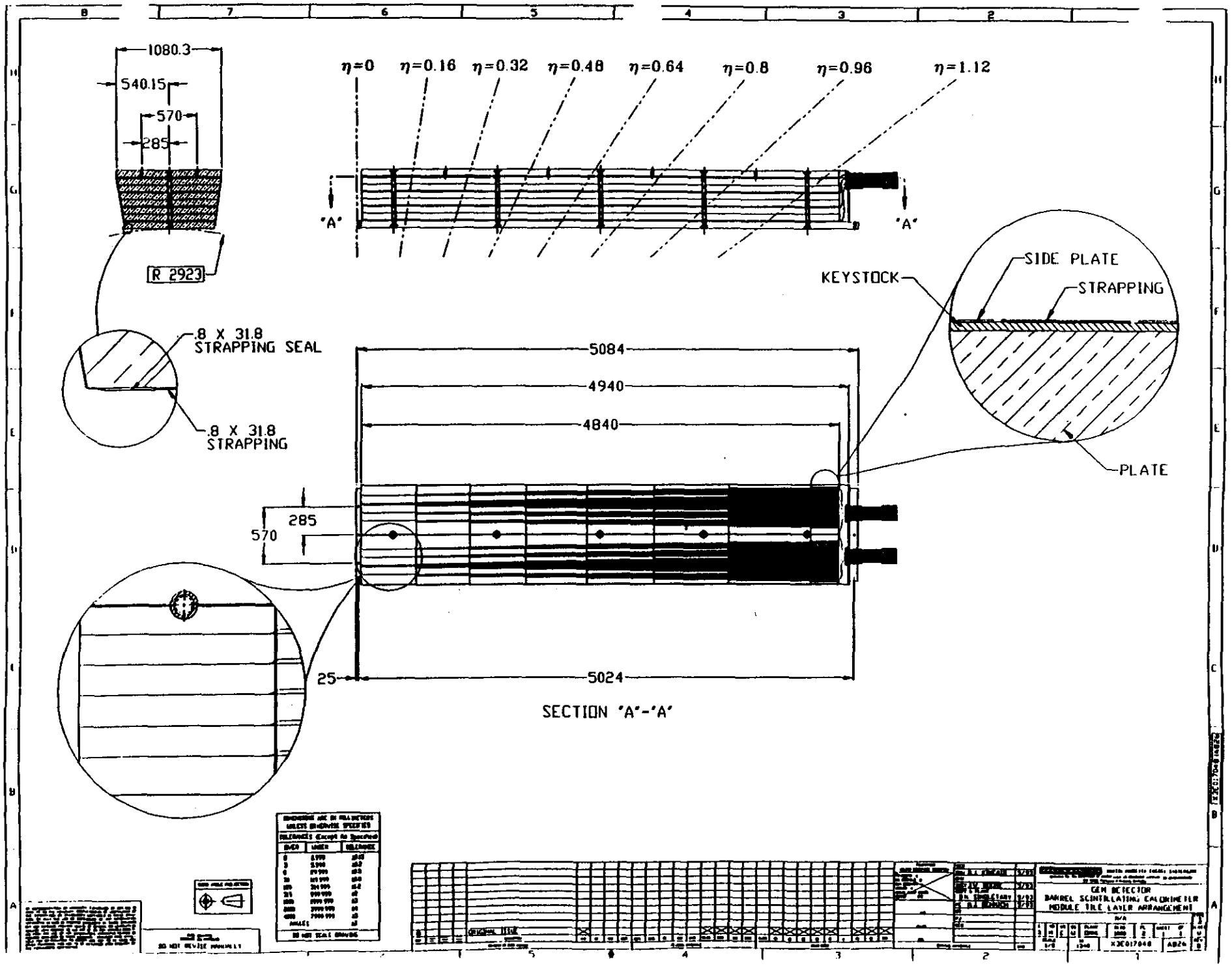
1080.3
540.15
570
285
R 2923
.8 X 31.8
STRAPPING SEAL
.8 X 31.8
STRAPPING
η=0
η=0.16
η=0.32
η=0.48
η=0.64
η=0.8
η=0.96
η=1.12
"A"
"A"
KEYSTOCK
SIDE PLATE
STRAPPING
PLATE
5084
4940
4840
285
570
25
5024
SECTION "A"-"A"
GEM DETECTOR
BARREL SCINTILLATING CALORIMETER
MODULE TILE LAYER ARRANGEMENT

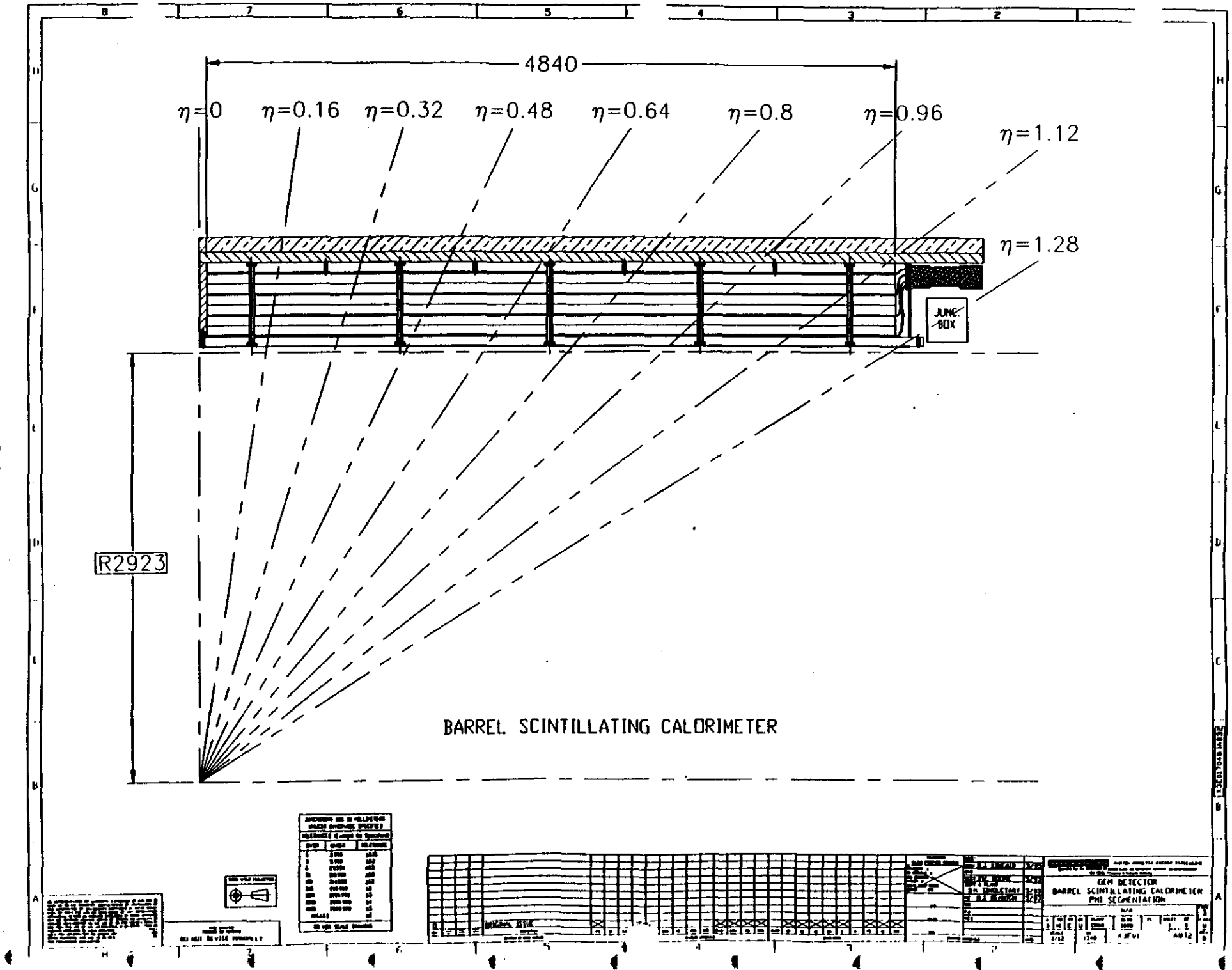
4840
η=0
η=0.16
η=0.32
η=0.48
η=0.64
η=0.8
η=0.96
η=1.12
η=1.28
JUNC. BOX
R2923
BARREL SCINTILLATING CALORIMETER
GEM DETECTOR
BARREL SCINTILLATING CALORIMETER
PHI SEGMENTATION

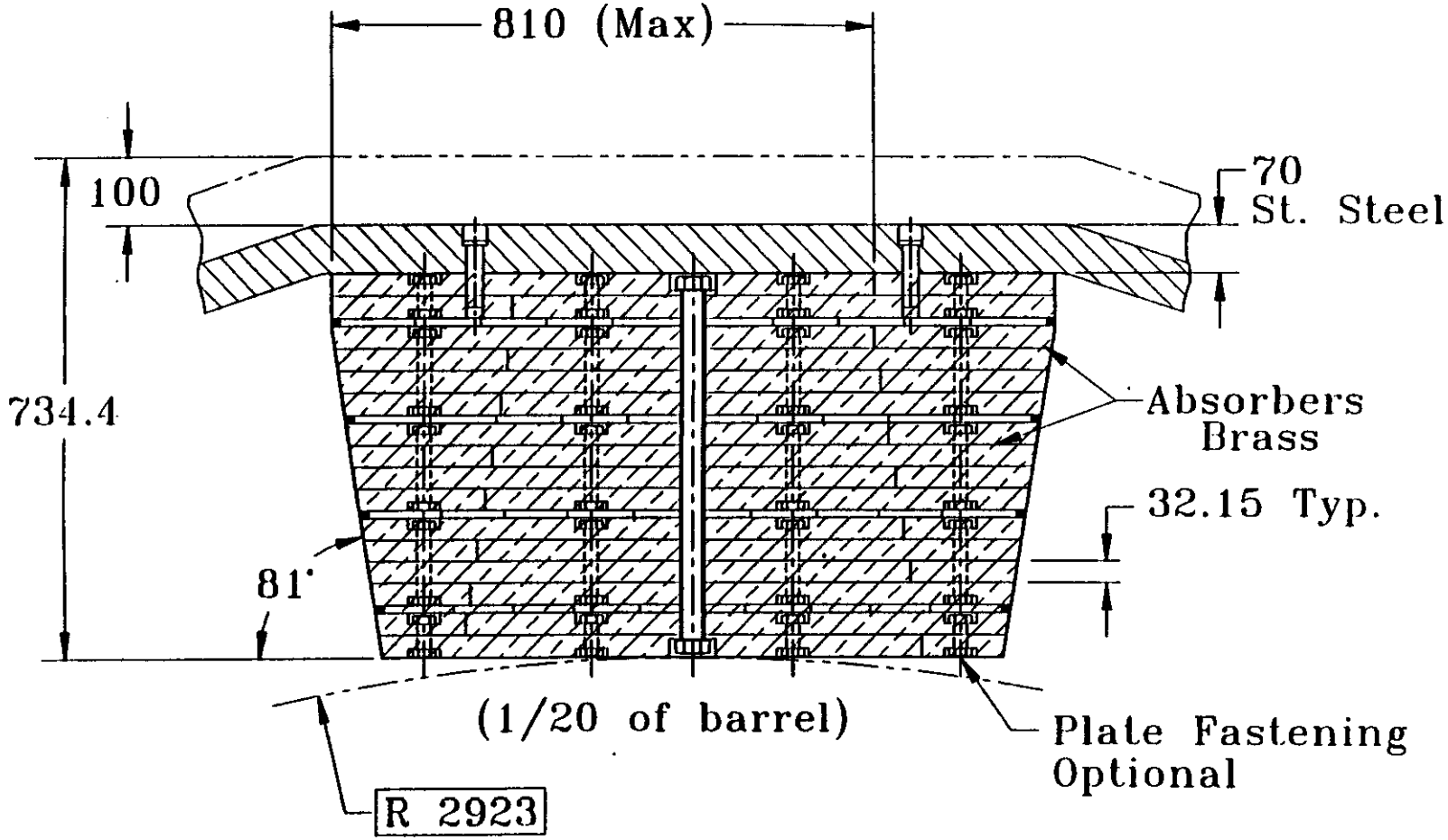

NOTE: Plates may be fastened with bolts, rivets, welds, or other methods at vendor's discretion.

GEM DETECTOR
BARREL SCINTILLATING CALORIMETER
ASSEMBLY DETAILS SHT 1

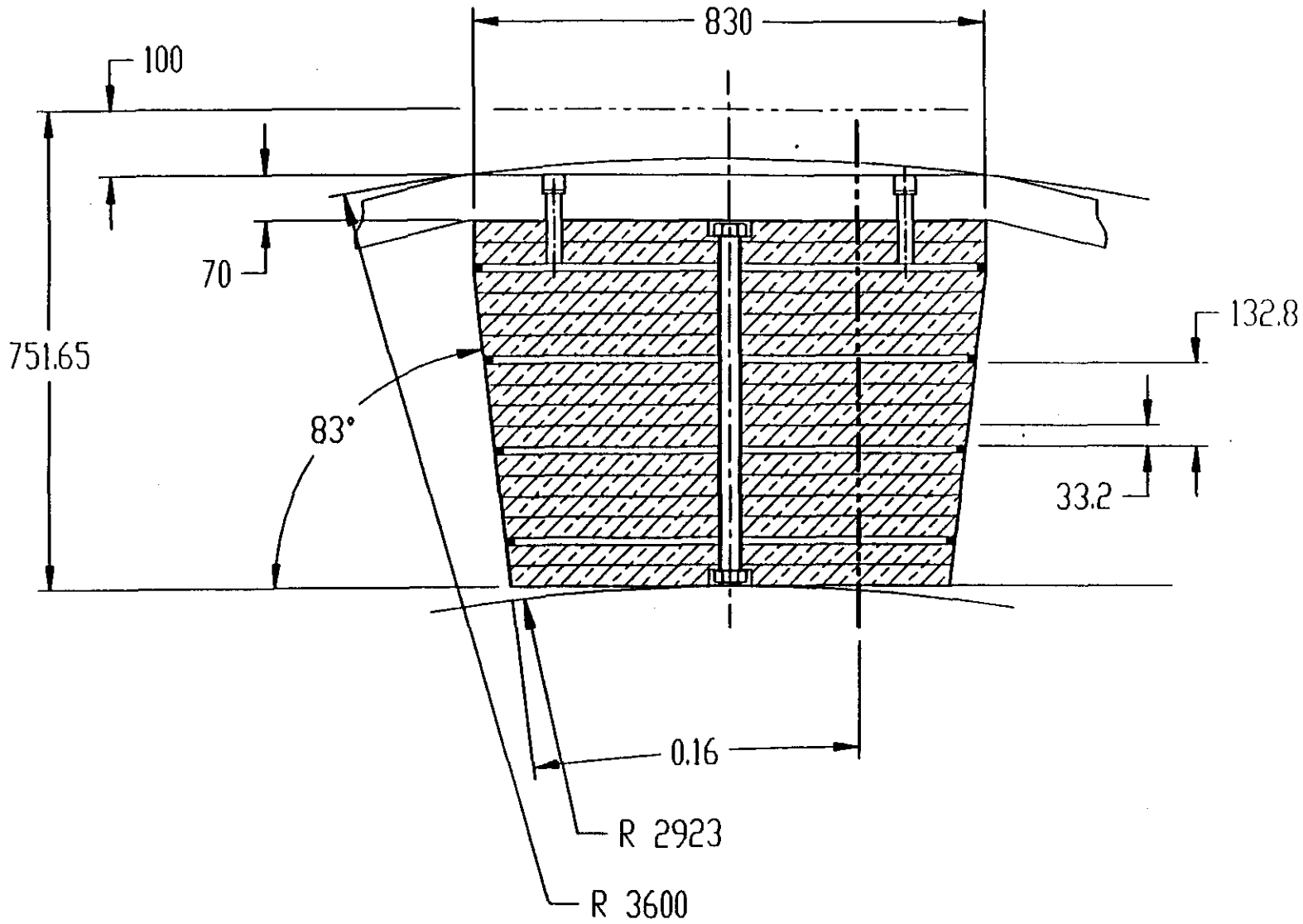
830
100
70
751.65
83°
132.8
33.2
0.16
R 2923
R 3600

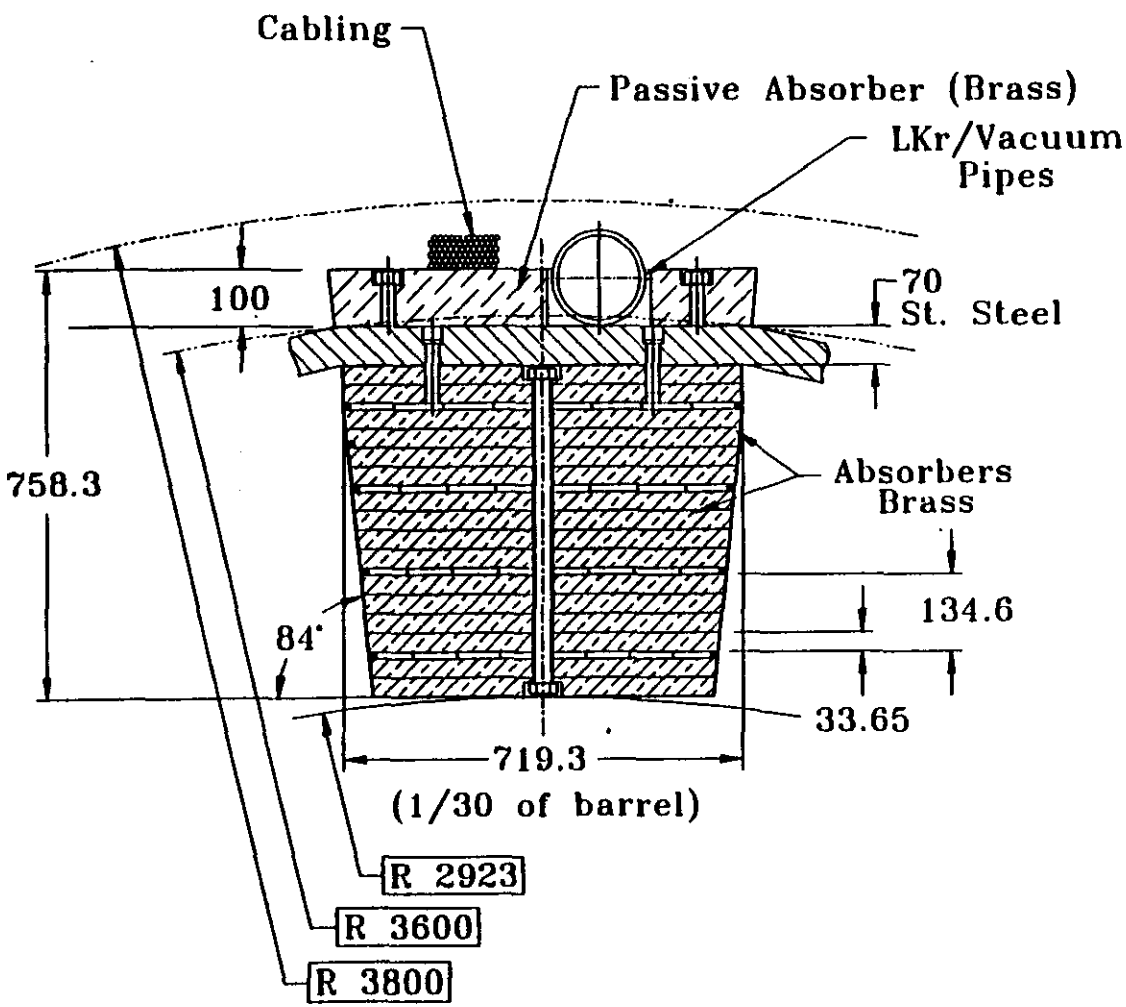

INTERFACE DIMENSION

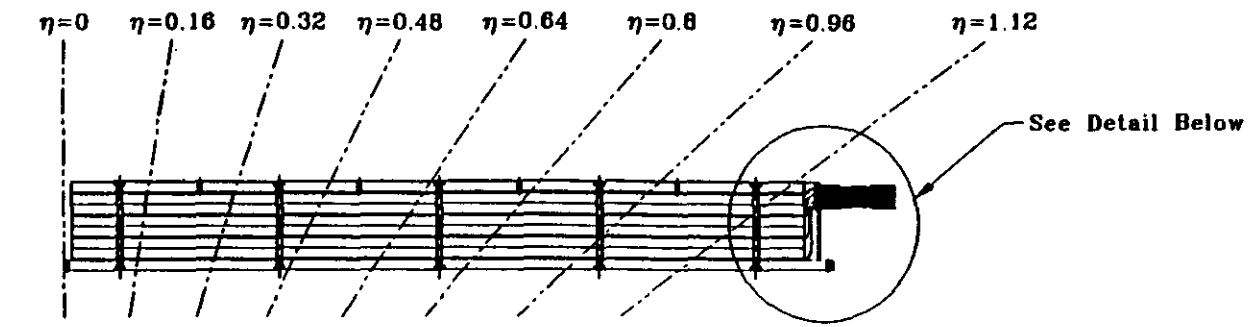
η=0
η=0.16
η=0.32
η=0.48
η=0.64
η=0.8
η=0.96
η=1.12
See Detail Below

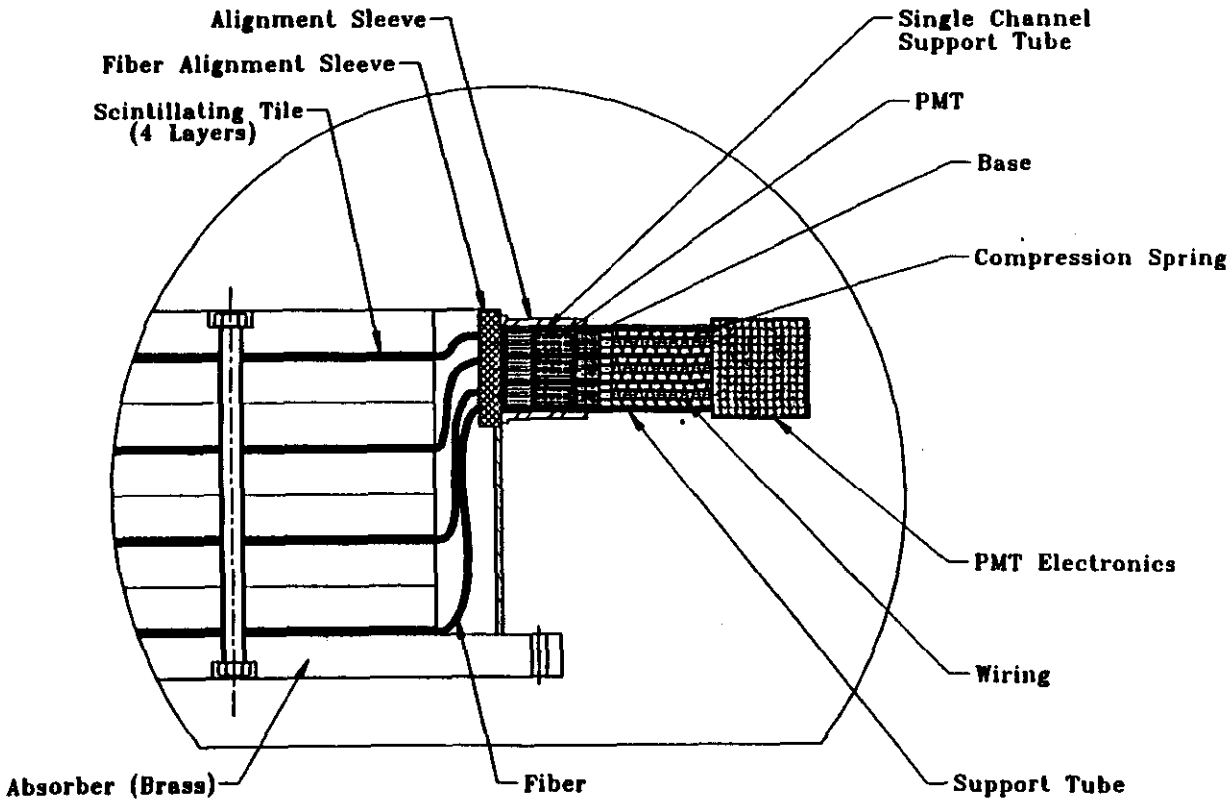
Alignment Sleeve
Fiber Alignment Sleeve
Scintillating Tile
(4 Layers)
Single Channel
Support Tube
PMT
Base
Compression Spring
PMT Electronics
Wiring
Support Tube
Fiber
Absorber (Brass)

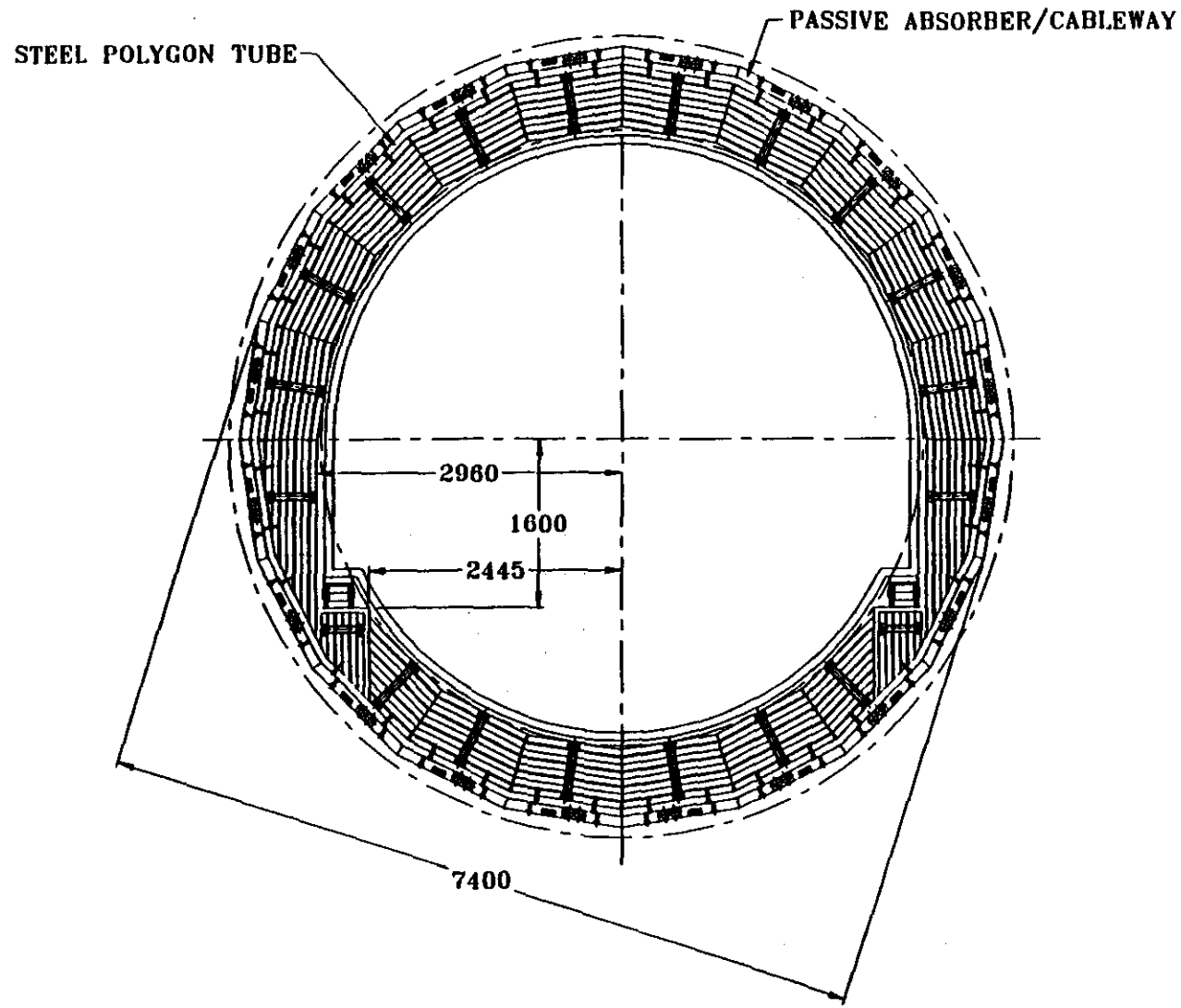

GEM DETECTOR
BARREL SCINTILLATING CALORIMETER
MODULE ASSEMBLY

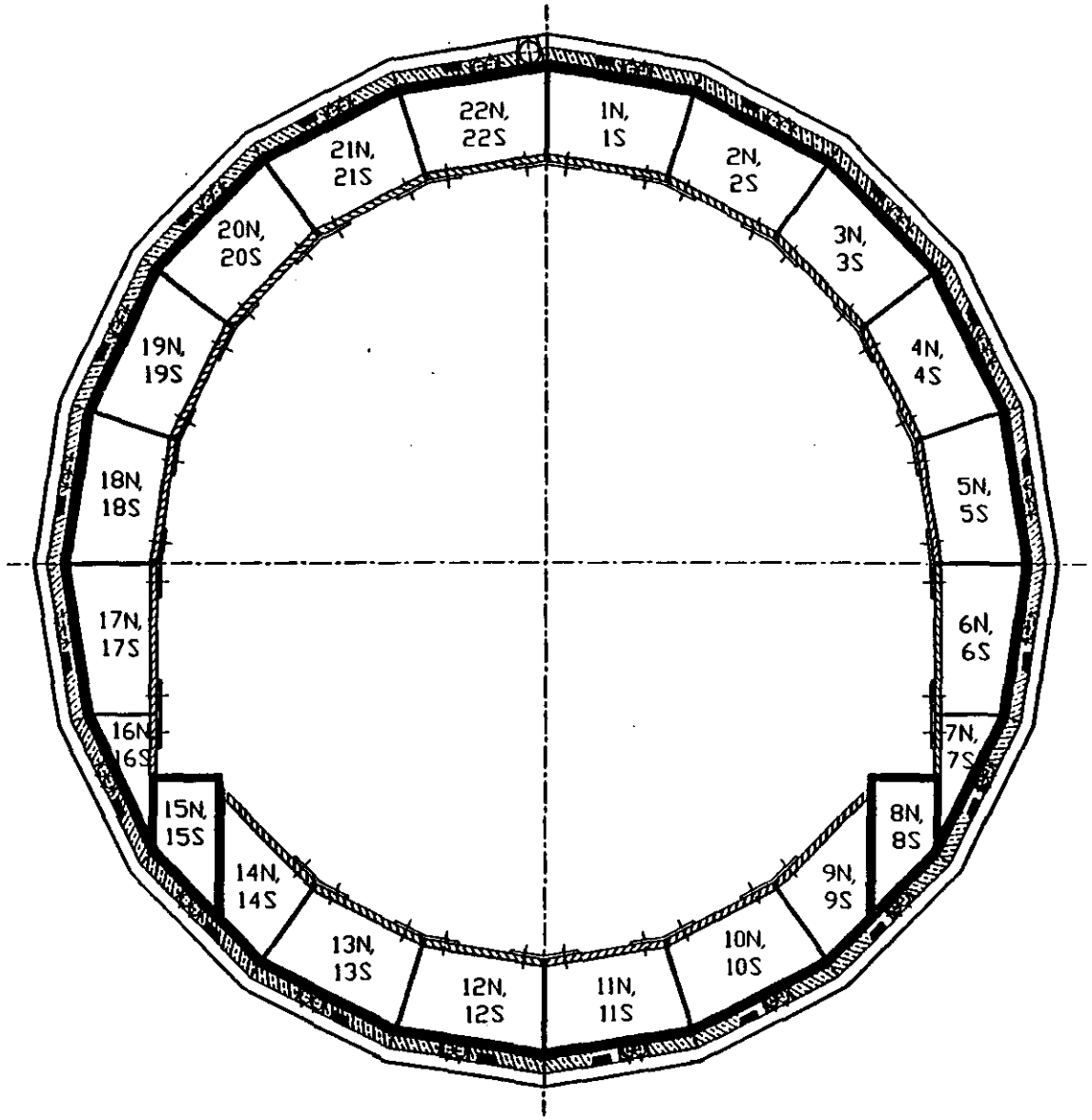

VIEW LOOKING SOUTH FROM NORTH

GEM DETECTOR
BARREL SCINTILLATING CALORIMETER
MODULE DESIGNATIONS

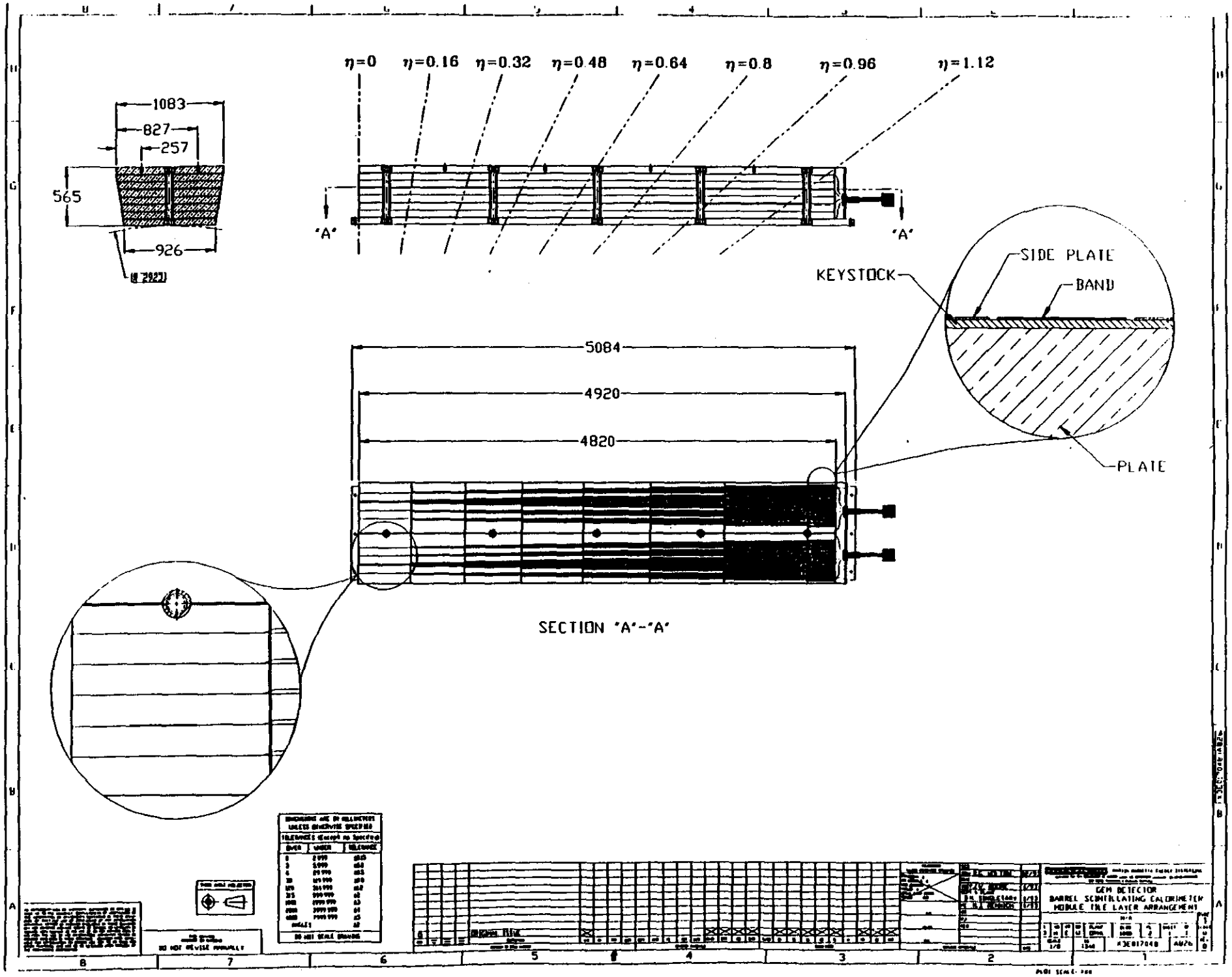
η=0
η=0.16
η=0.32
η=0.48
η=0.64
η=0.8
η=0.96
η=1.12
1083
827
257
565
926
"A"
"A"
SIDE PLATE
KEYSTOCK
BAND
PLATE
5084
4920
4820
SECTION "A"-"A"
GEM DETECTOR
BARREL SCINTILLATING CALORIMETER
MODULE TILE LAYER ARRANGEMENT

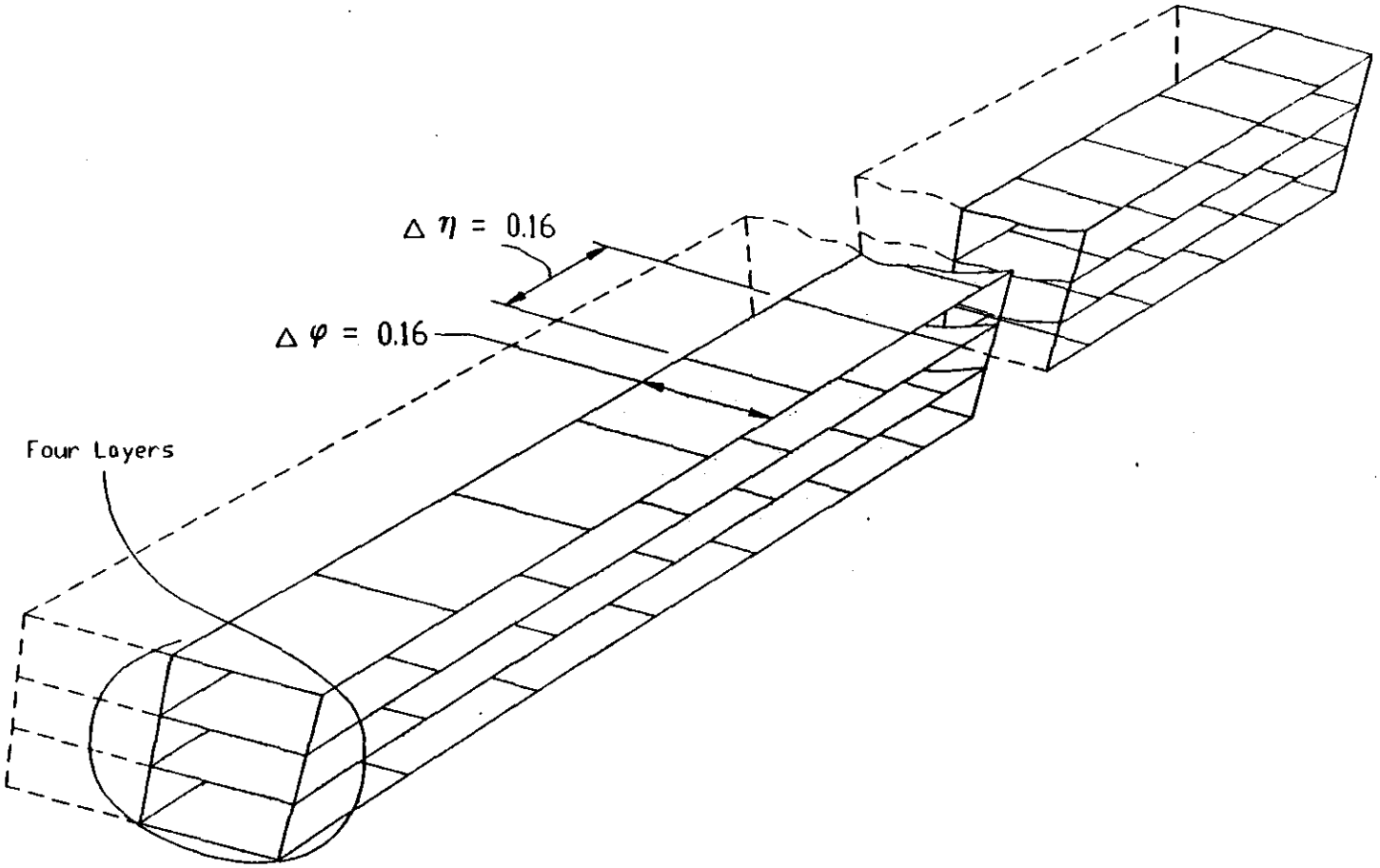
Δ η = 0.16
Δ φ = 0.16
Four Layers

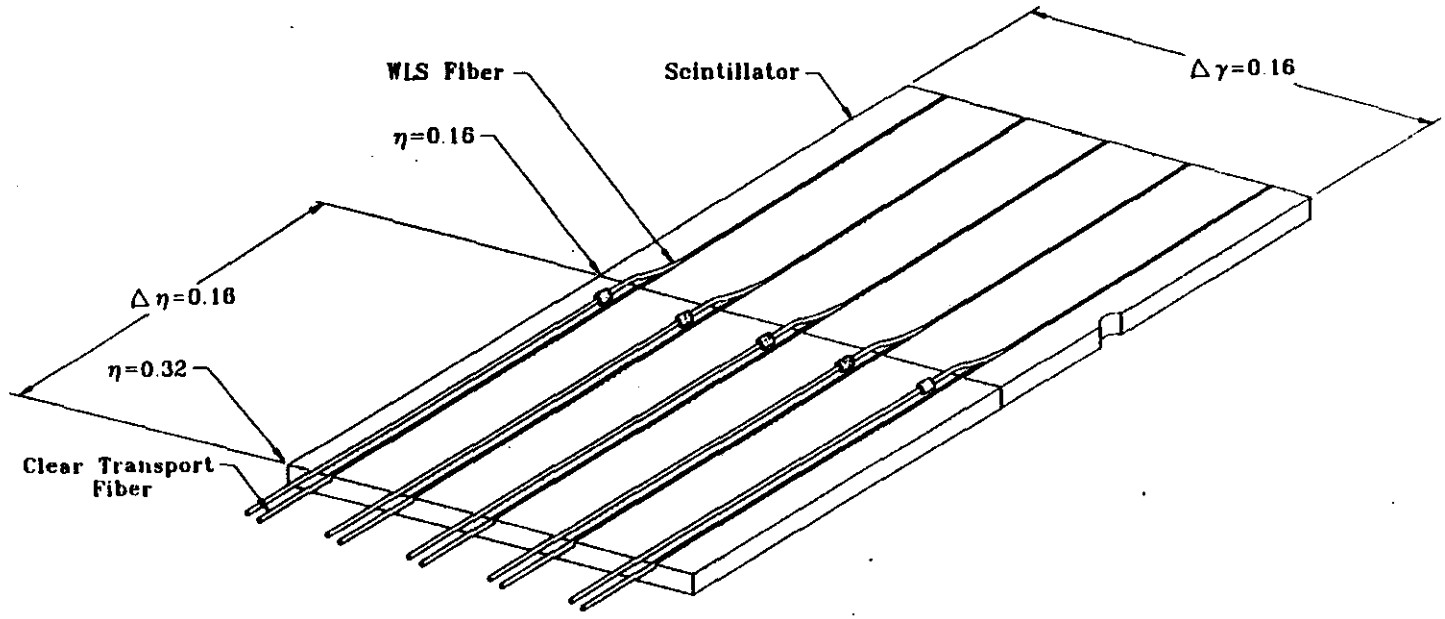

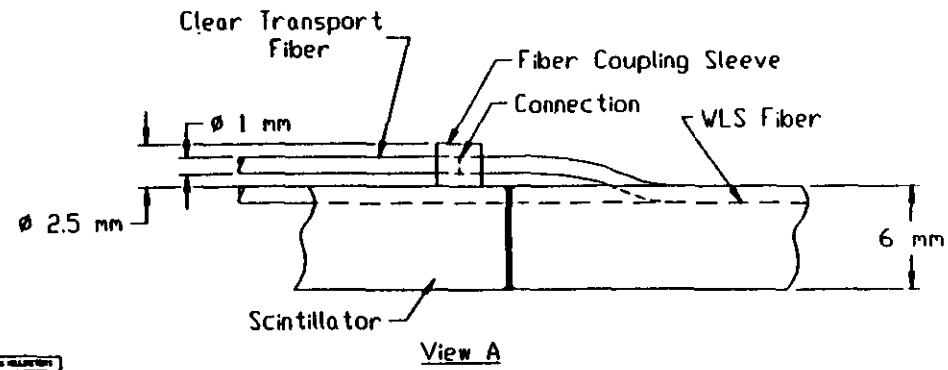

GEM DETECTOR
BARREL SCINTILLATING CALORIMETER
TILE-FIBER ISOMETRIC DETAIL

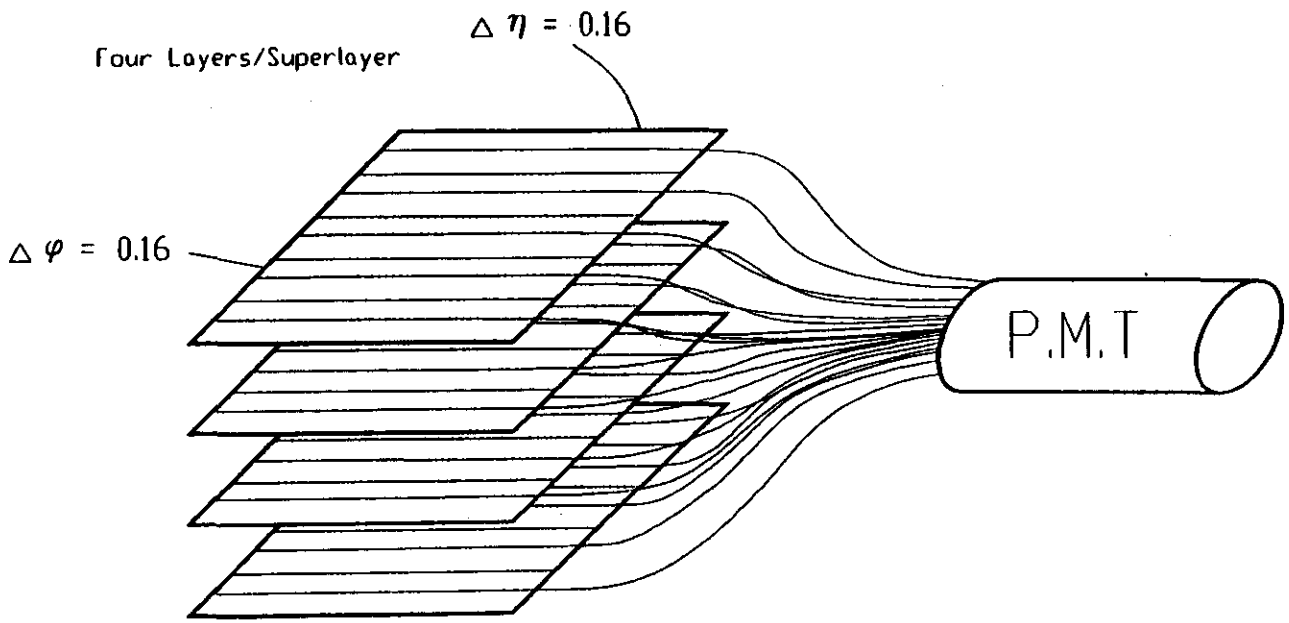
Four Layers/Superlayer
$\Delta\eta = 0.16$
$\Delta\varphi = 0.16$
P.M.T

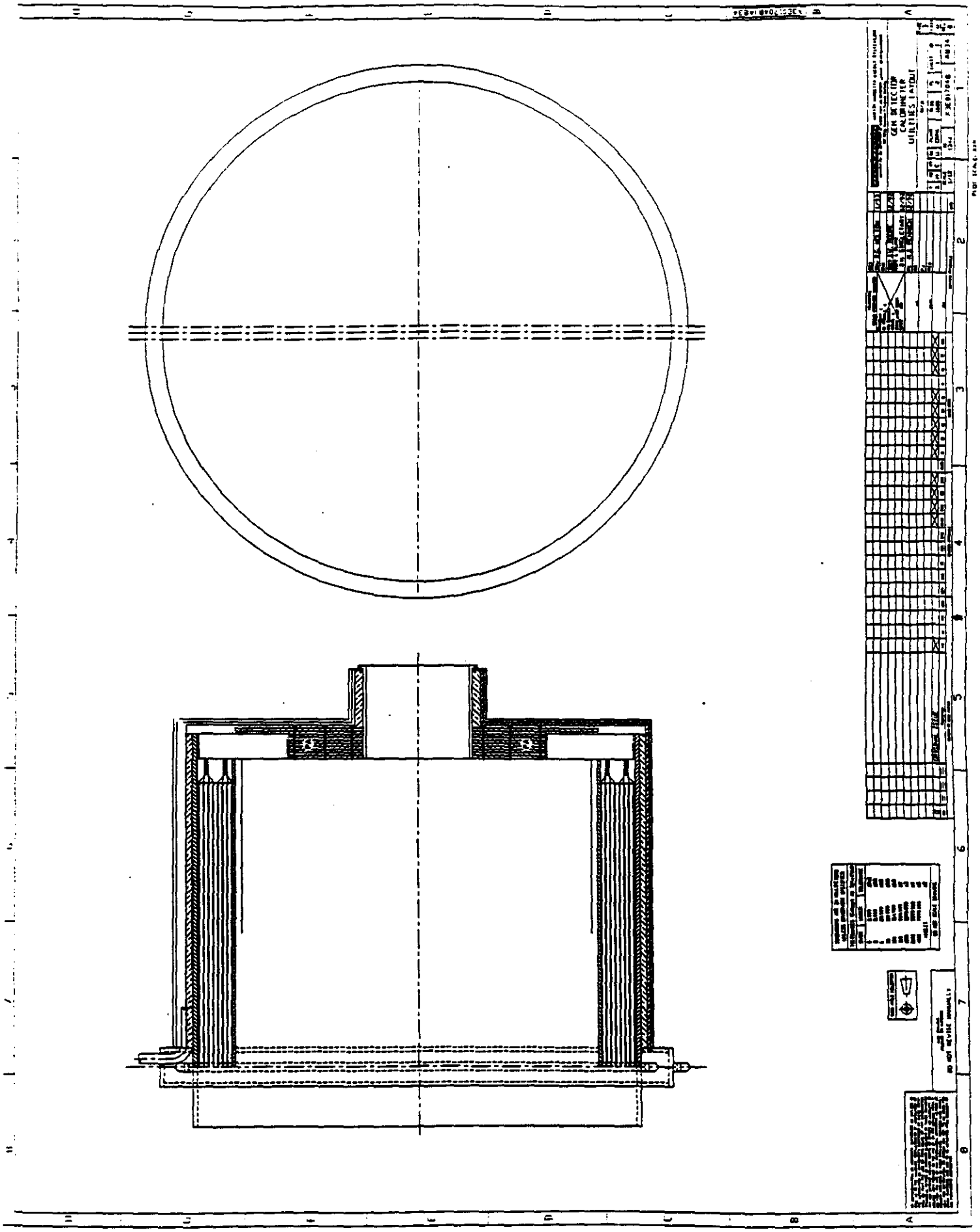
GEN DETECTOR
CALORIMETER
UTILITIES LAYOUT

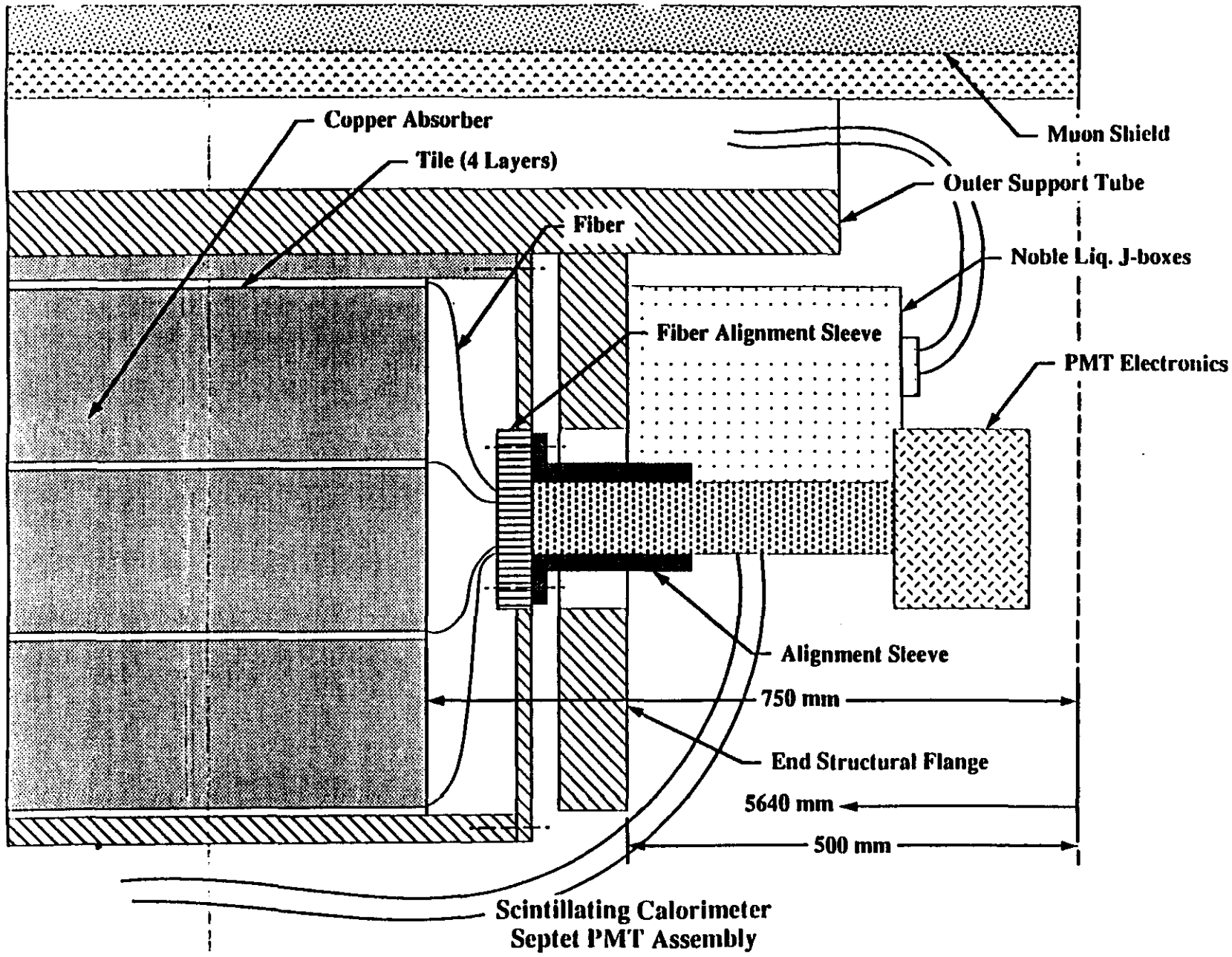
Copper Absorber
Tile (4 Layers)
Fiber
Muon Shield
Outer Support Tube
Noble Liq. J-boxes
Fiber Alignment Sleeve
PMT Electronics
Alignment Sleeve
750 mm
End Structural Flange
5640 mm
500 mm
Scintillating Calorimeter
Septet PMT Assembly

G.TC.009

ORNL

NOTE:

FOAM RUBBER OR A SIMILAR MATERIAL HAVING GOOD INSULATING PROPERTIES AND ELASTICITY CAN BE USED TO SECURELY HOLD THE TUBE IN THE CENTER AND AN APPROPRIATE HOLDER SHOULD BE USED TO MOUNT THE SHIELD CASE TO THE MEASUREMENT SYSTEM. WHEN TIGHTENING THE SHIELD CASE USING BANDS OR SCREWS, SUFFICIENT CARE SHOULD BE TAKEN THAT A FORCE SUFFICIENT TO DEFORM THE SHIELD CASE IS NOT APPLIED.

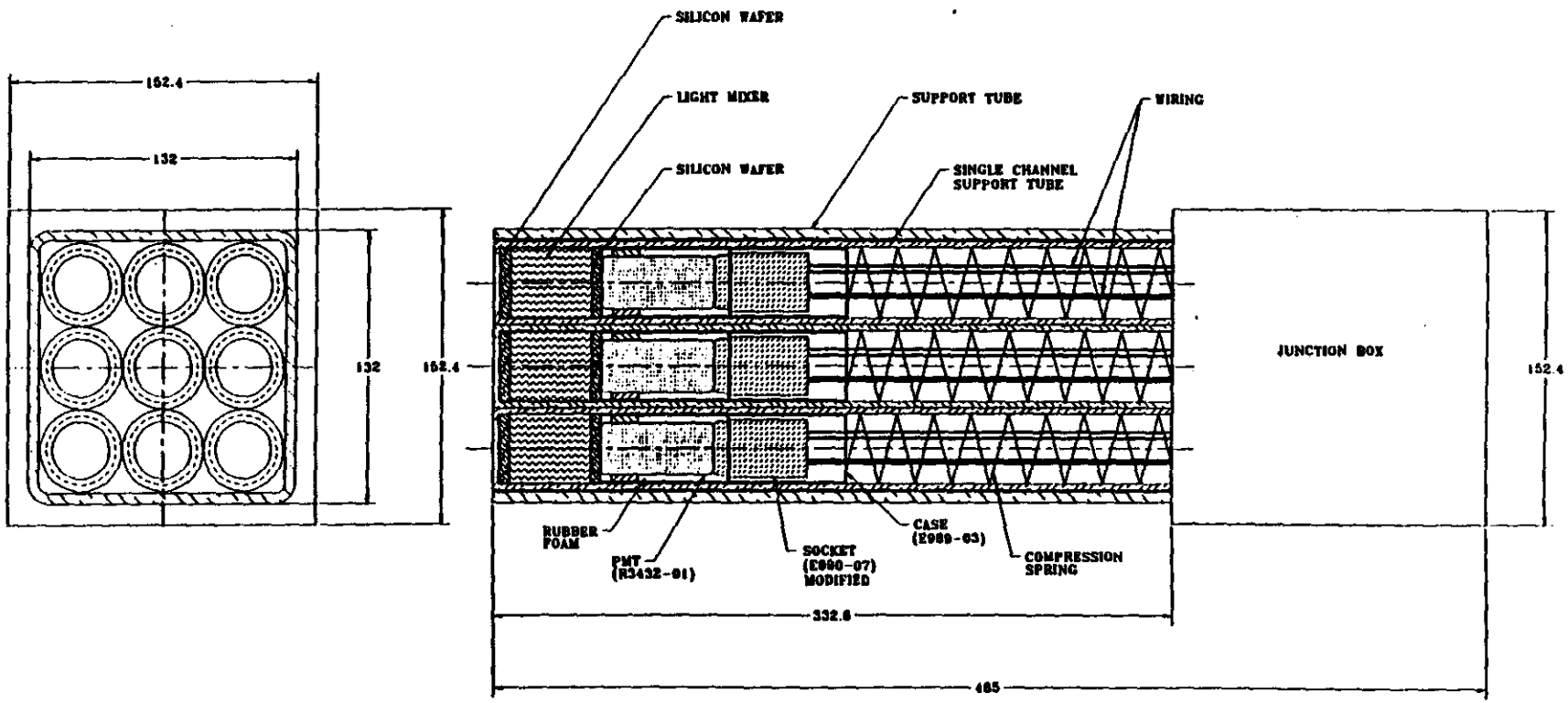

NOTE: DIMENSIONS ARE IN MILLIMETERS
DIMENSIONS ARE FOR REFERENCE ONLY

GEM DETECTOR
SCINTILLATING HADRON CALORIMETER
PMT READOUT ASSEMBLY

Passive End Cap

Conceptual Design Drawings

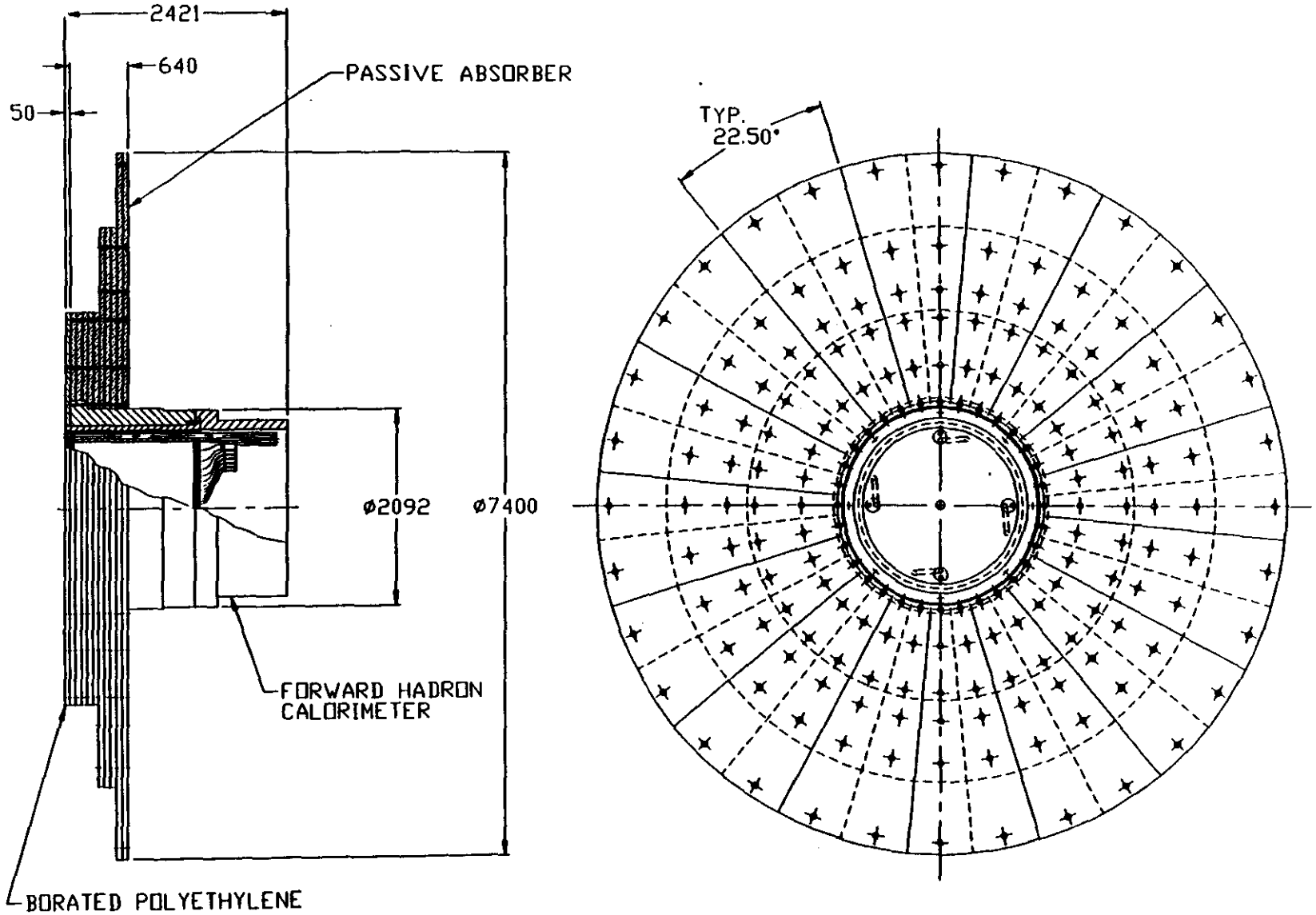
2421
640
50
PASSIVE ABSORBER
TYP.
22.50°
ø2092
ø7400
FORWARD HADRON
CALORIMETER
BORATED POLYETHYLENE

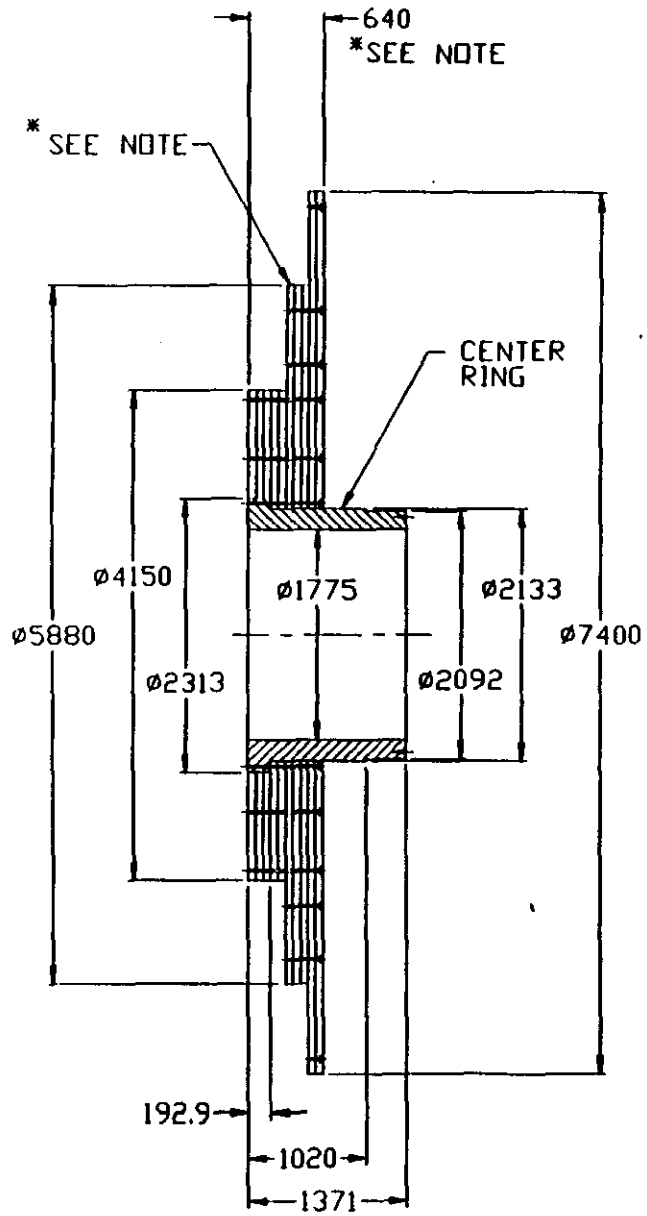

NOTE: ONE LAYER OF PLATES IS ONLY 61.3 THK.

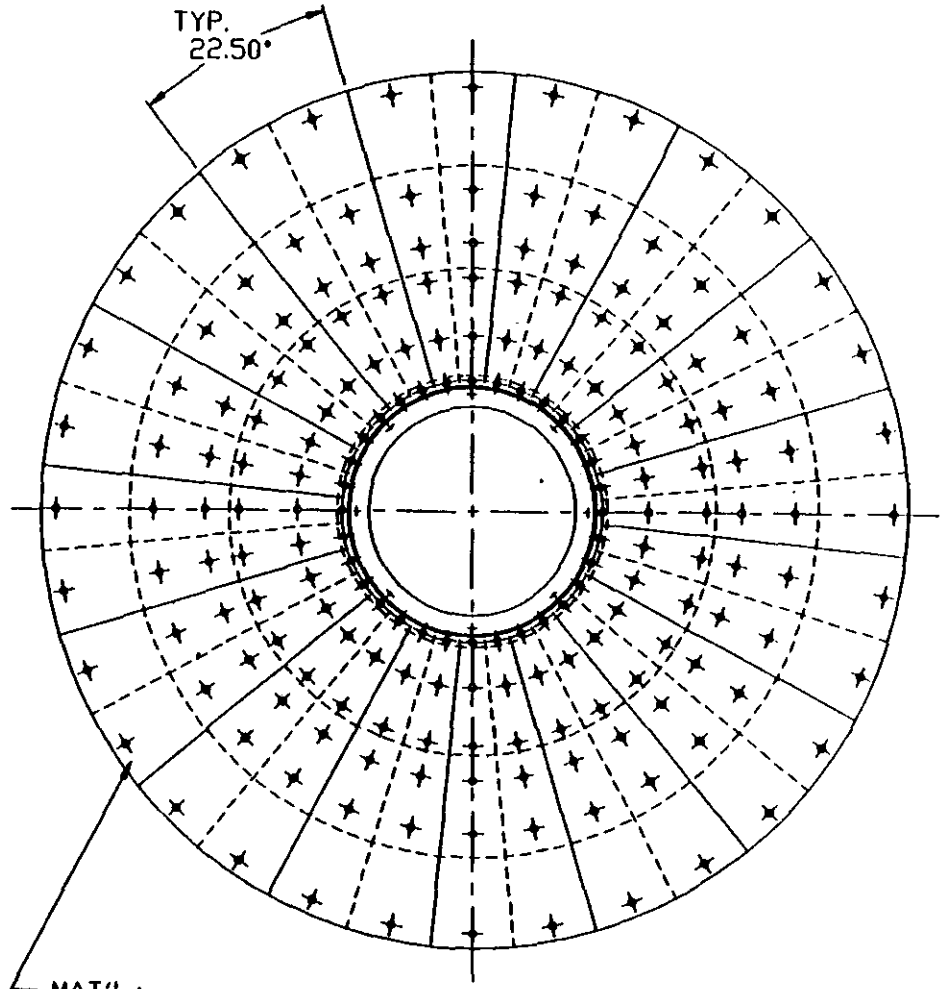

MAT'L.:
BRASS > 80% Cu
THICKNESS: 64.3 TYP.
SEE NOTE

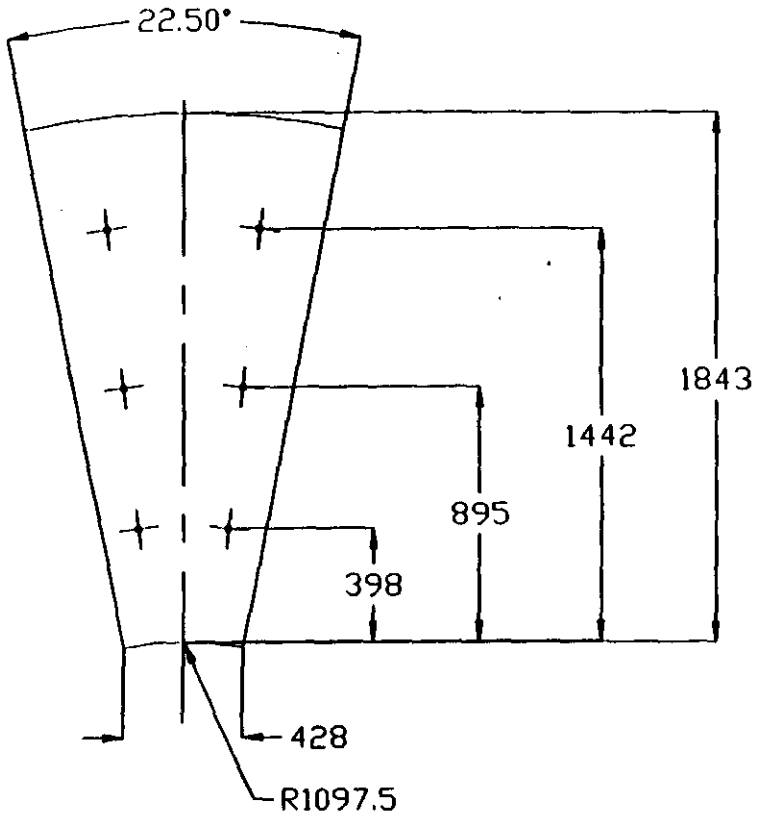

SEGMENT "A" (32 REQ'D.)
THICKNESS: 50

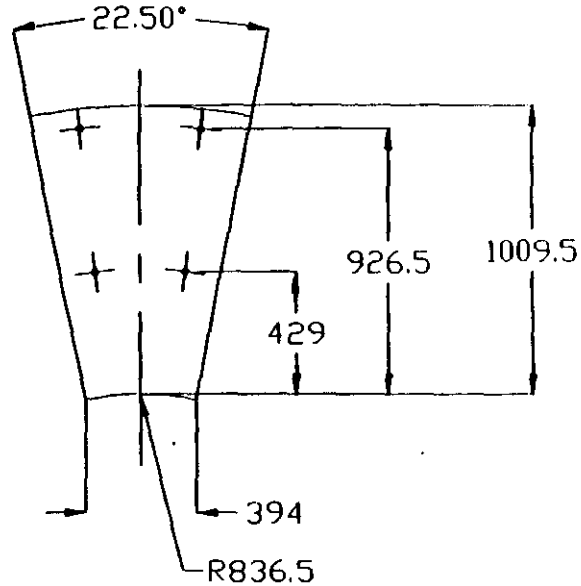

SEGMENT "B" (138 REQ'D.)
THICKNESS: 50

SEGMENT "C" (16 REQ'D.)
THICKNESS: 24

MAT'L: BRASS > 80% Cu

GEM DETECTOR
PASSIVE END CAPS
ABSORBER PLATE DETAILS

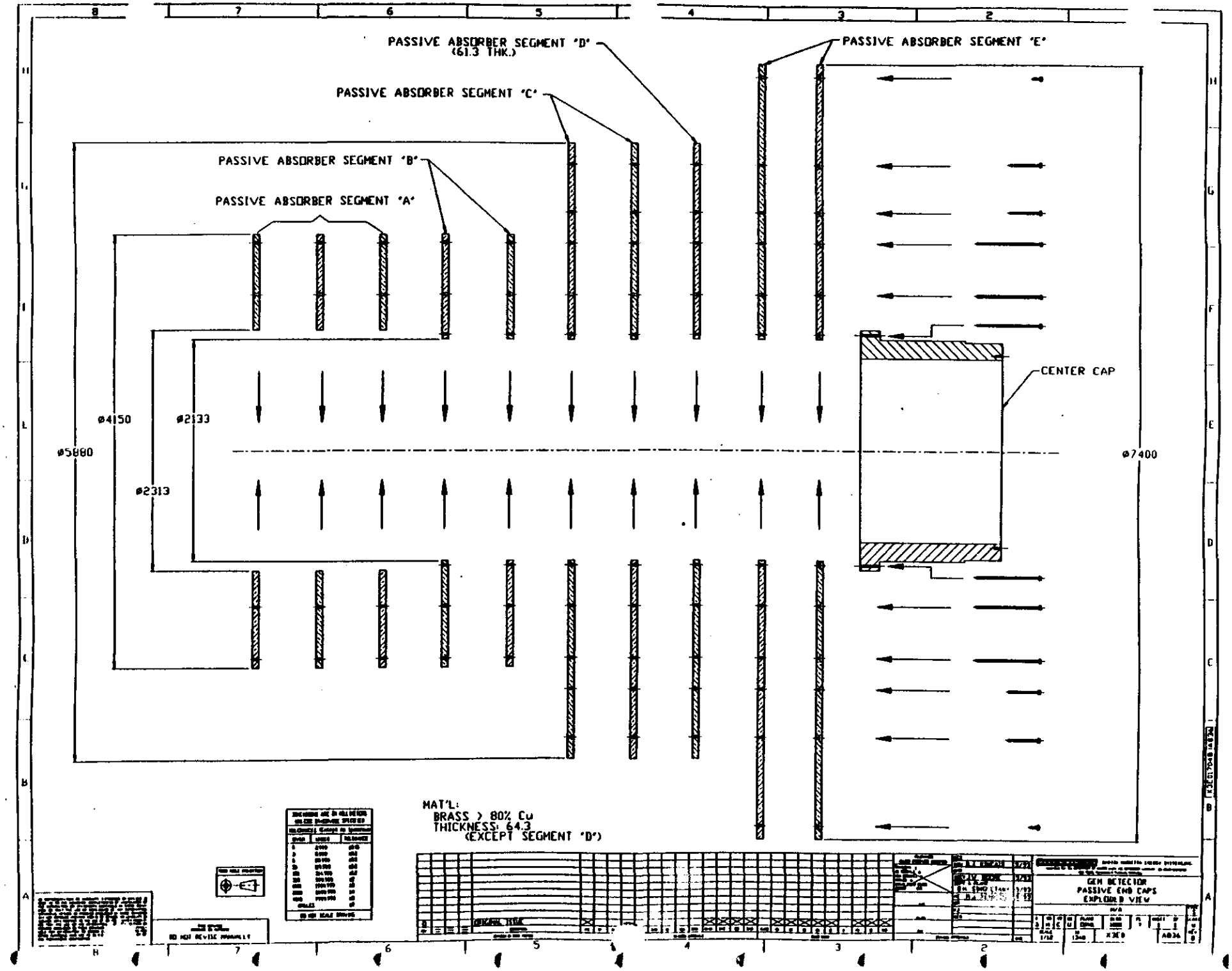
PASSIVE ABSORBER SEGMENT 'D'
(61.3 THK.)
PASSIVE ABSORBER SEGMENT 'E'
PASSIVE ABSORBER SEGMENT 'C'
PASSIVE ABSORBER SEGMENT 'B'
PASSIVE ABSORBER SEGMENT 'A'
CENTER CAP
ø4150
ø2133
ø5880
ø2313
ø7400
MAT'L:
BRASS > 80% Cu
THICKNESS: 64.3
(EXCEPT SEGMENT 'D')
GEM DETECTOR
PASSIVE END CAPS
EXPLODED VIEW

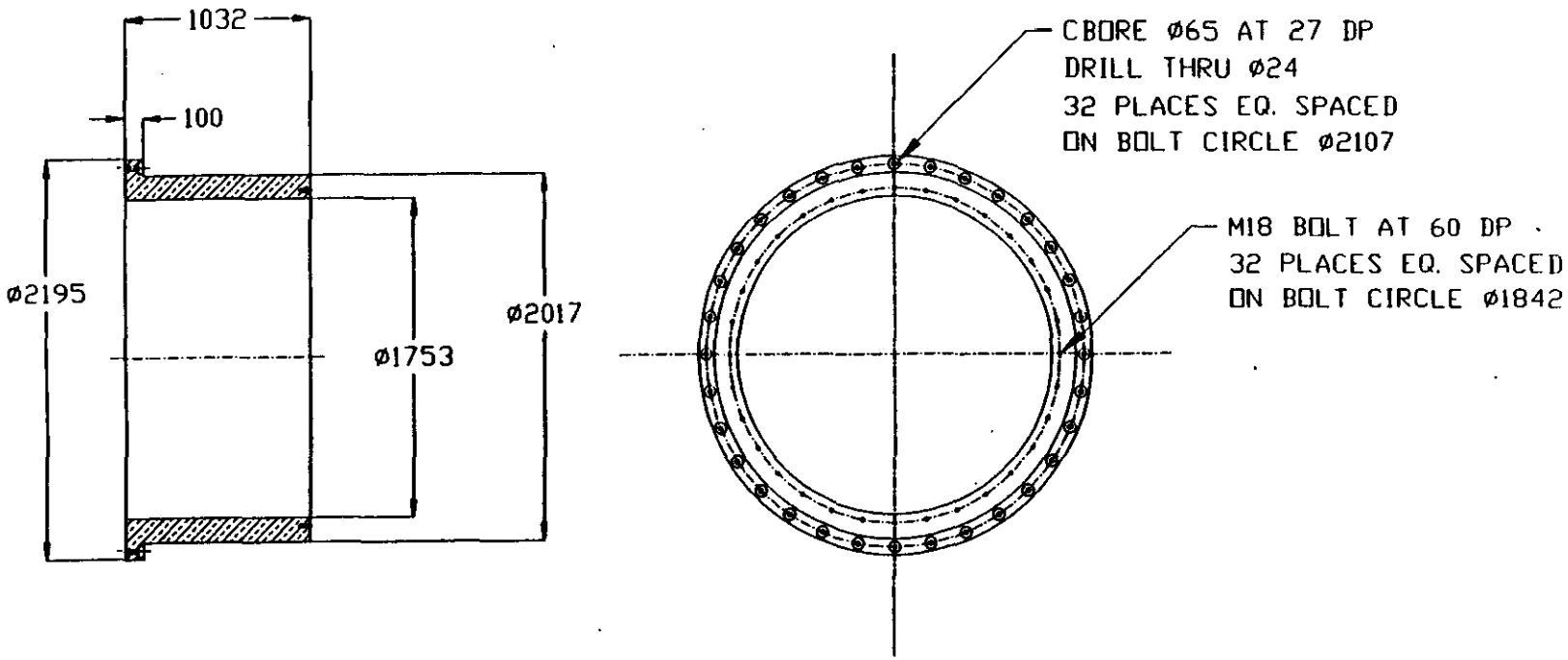

MAT'L: BRASS > 80% Cu

GEM DETECTOR
PASSIVE END CAPS
CENTER TUBE DETAIL

X3C017848

A830

247

Forward Hadron Calorimeter

Conceptual Design Drawings

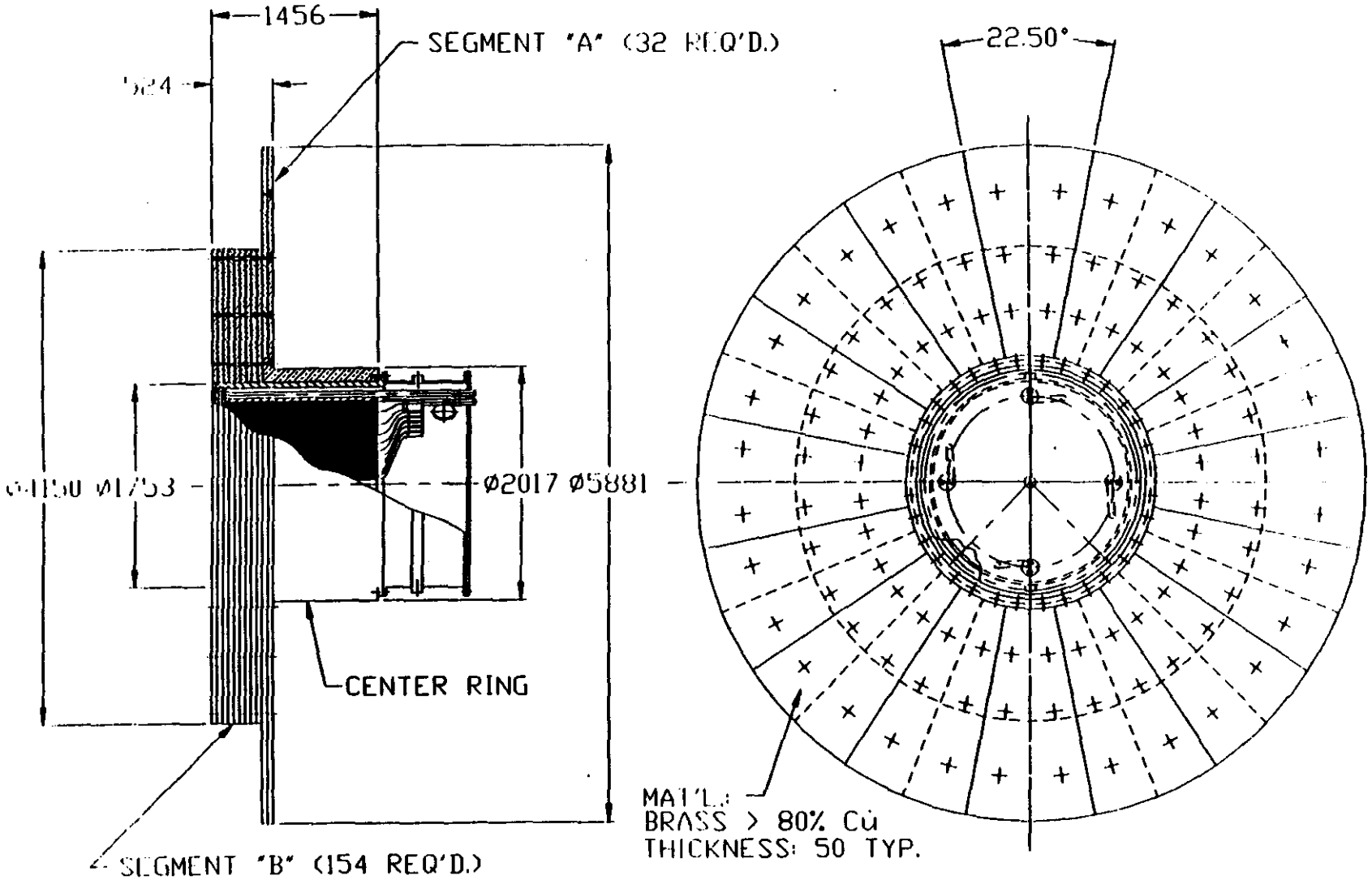
1456
SEGMENT "A" (32 REQ'D.)
22.50°
Ø2017 Ø5881
CENTER RING
SEGMENT "B" (154 REQ'D.)
MAT'L:
BRASS > 80% Cu
THICKNESS: 50 TYP.

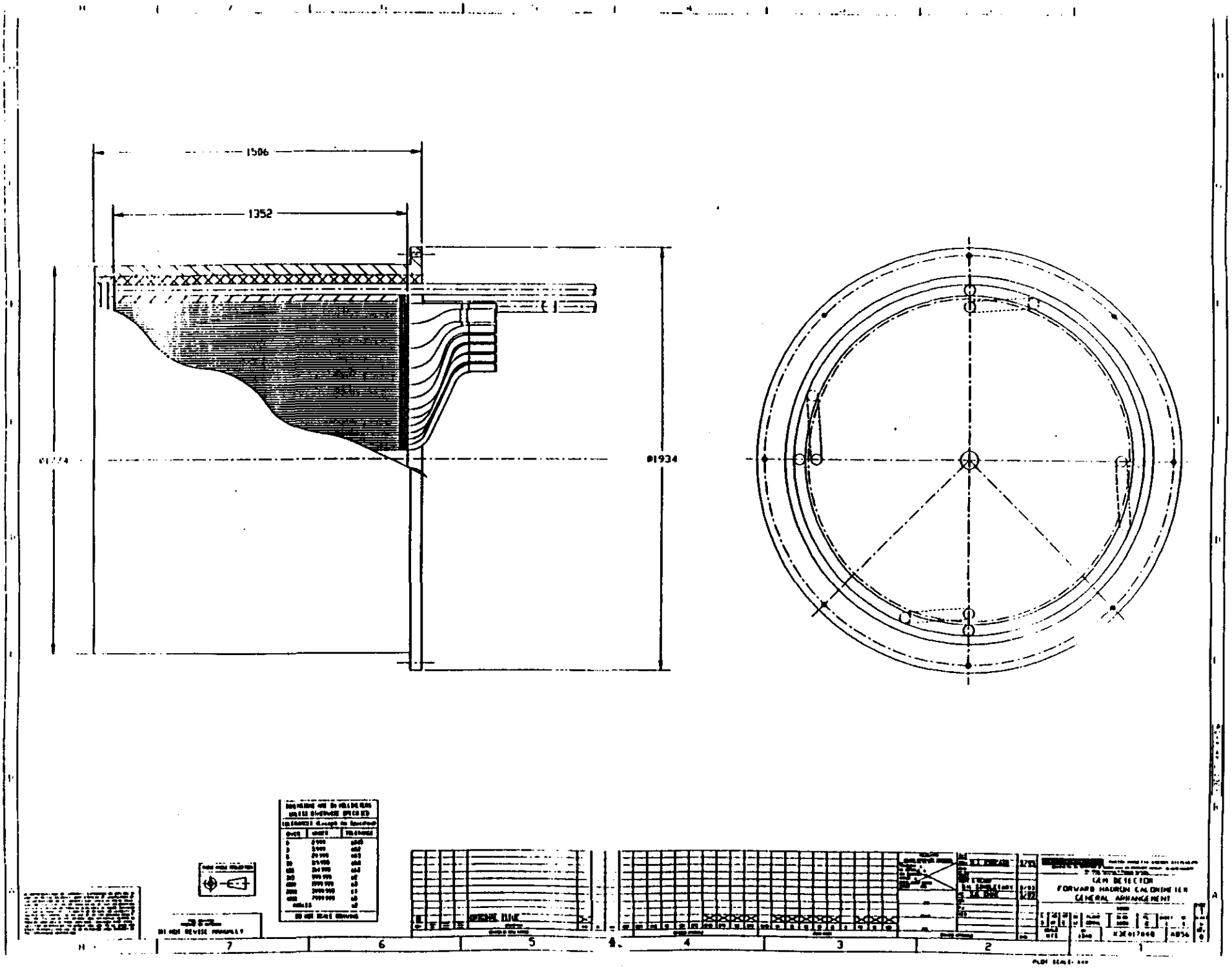
1506
1352
Ø1934
GEN DETECTOR
FORWARD HADRON CALORIMETER
GENERAL ARRANGEMENT

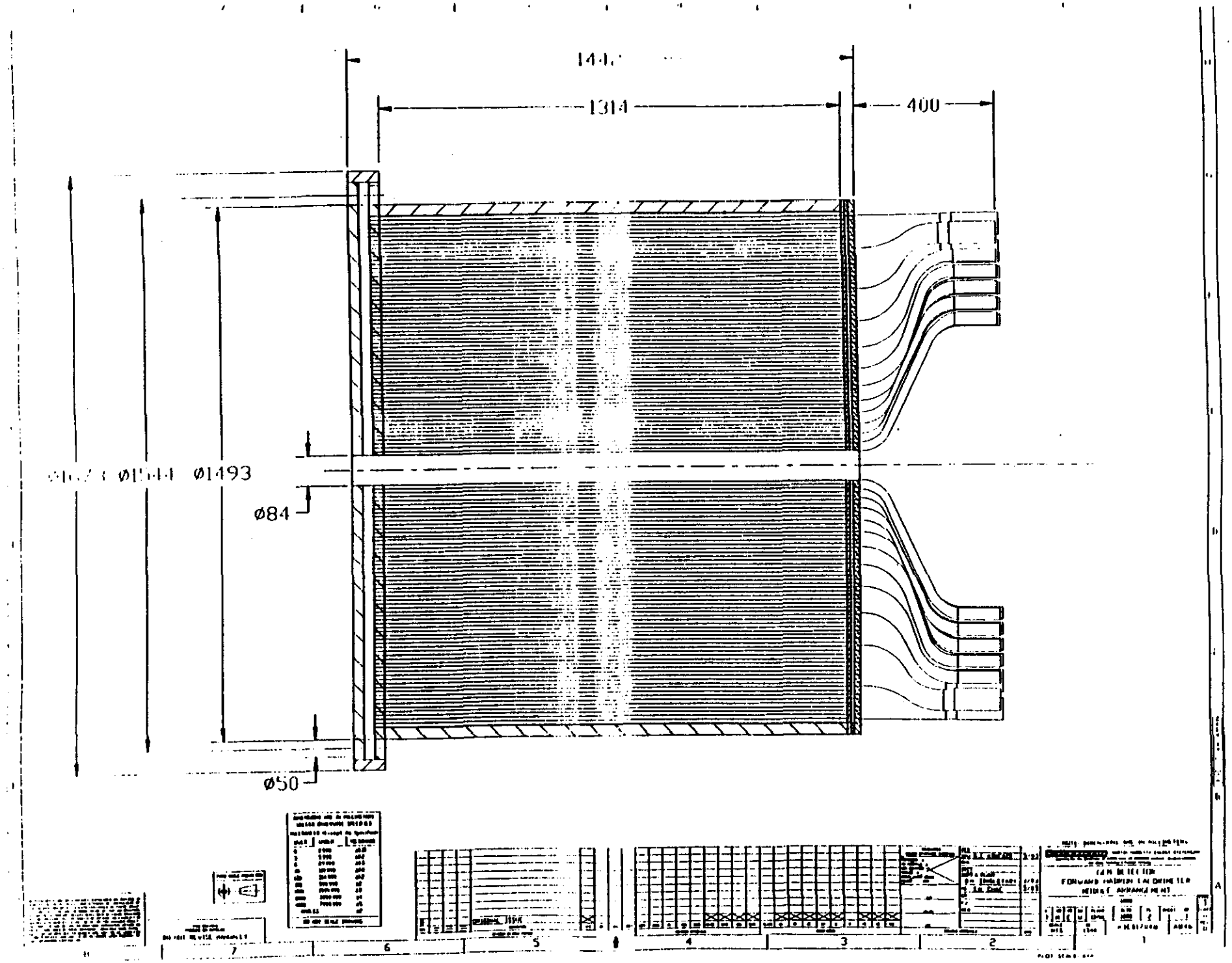
1314
400
Ø1544
Ø1493
Ø84
Ø50

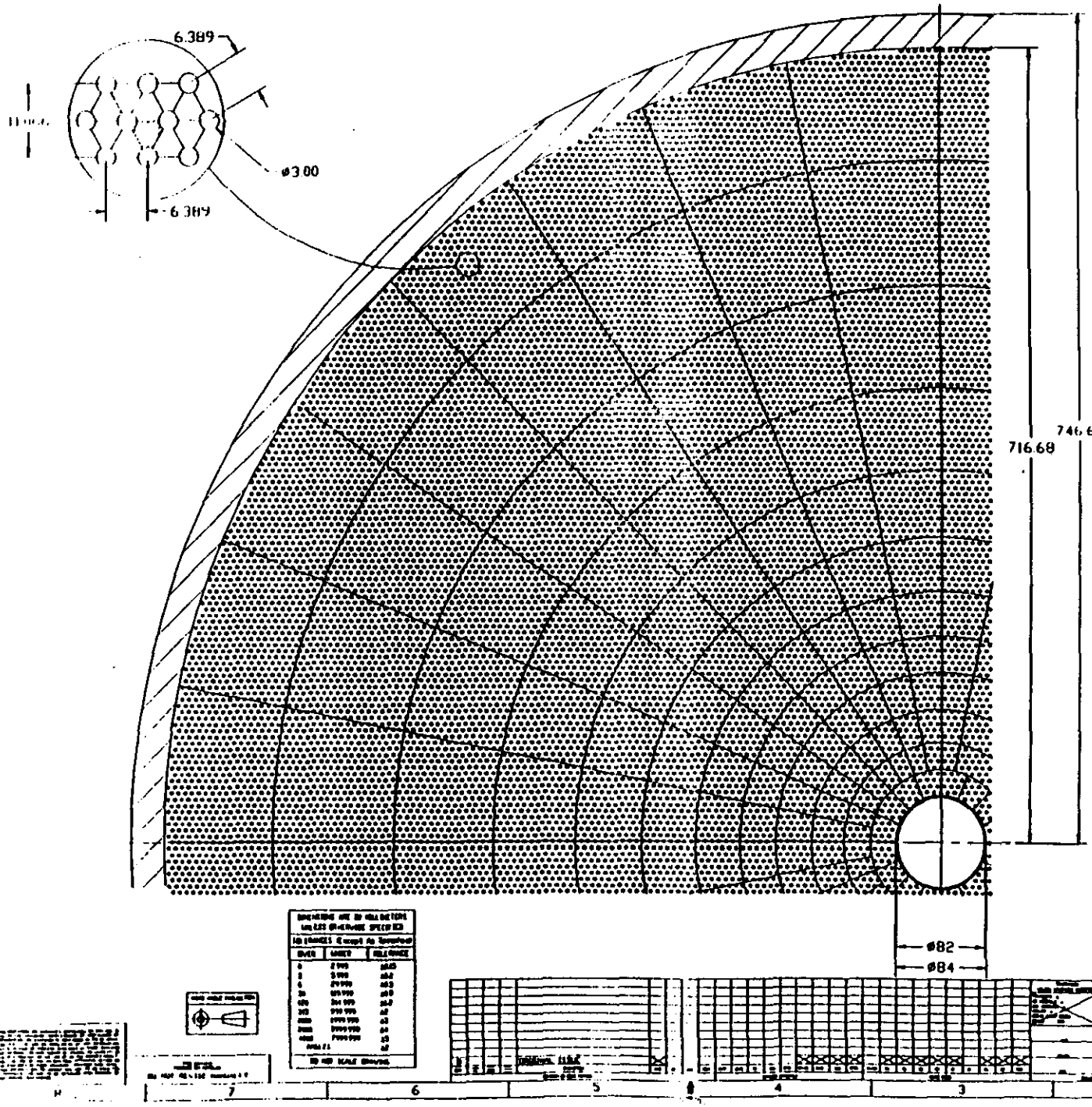

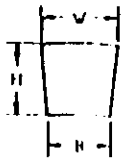

SEG NO	NO SEG /360°	DIM "H"	DIM "V"	DIM "B"
1	16	22.78	25.28	16.07
2	32	23.89	17.38	15.70
3	32	29.37	23.14	17.38
4	32	33.54	29.71	23.14
5	32	33.57	36.30	29.71
6	32	41.07	44.34	36.30
7	32	50.13	54.16	44.34
8	32	61.26	66.17	54.16
9	32	74.91	80.86	66.17
10	32	91.63	98.82	80.86
11	32	112.16	120.81	98.82
12	32	100.42	140.49	120.81

SEGMENT NUMBER	APPROX NO HOLES/SEGMENT
1	15
2	15
3	20
4	30
5	40
6	50
7	80
8	110
9	160
10	250
11	310
12	380

GEM DETECTOR
FORWARD HADRON CALORIMETER
SCINTILLATING LIGHT QUARTER SECTION

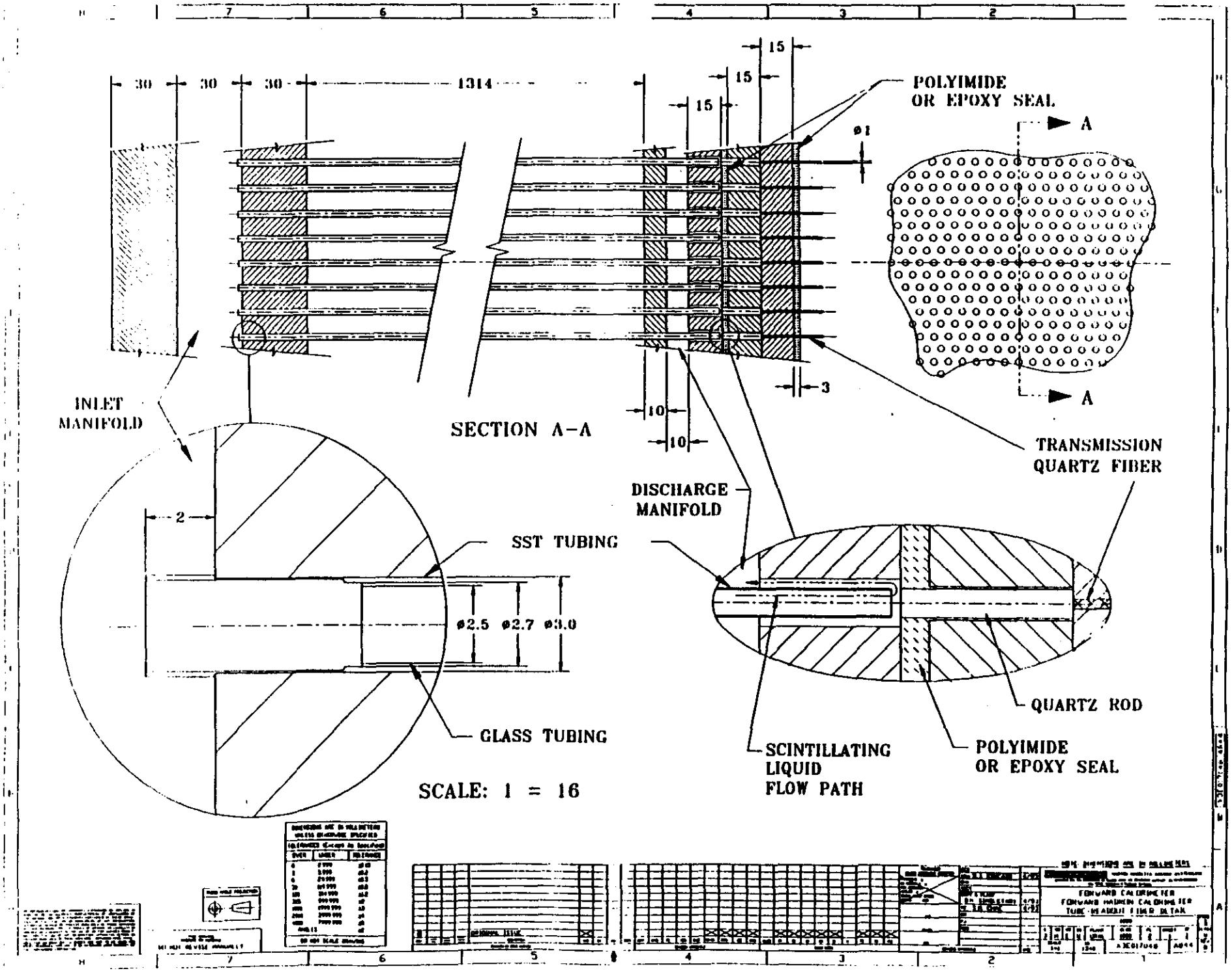
30
30
30
1314
15
15
15
POLYIMIDE
OR EPOXY SEAL
ø1
A
A
3
10
10
INLET
MANIFOLD
SECTION A-A
TRANSMISSION
QUARTZ FIBER
DISCHARGE
MANIFOLD
2
SST TUBING
ø2.5
ø2.7
ø3.0
GLASS TUBING
SCALE: 1 = 16
QUARTZ ROD
SCINTILLATING
LIQUID
FLOW PATH
POLYIMIDE
OR EPOXY SEAL

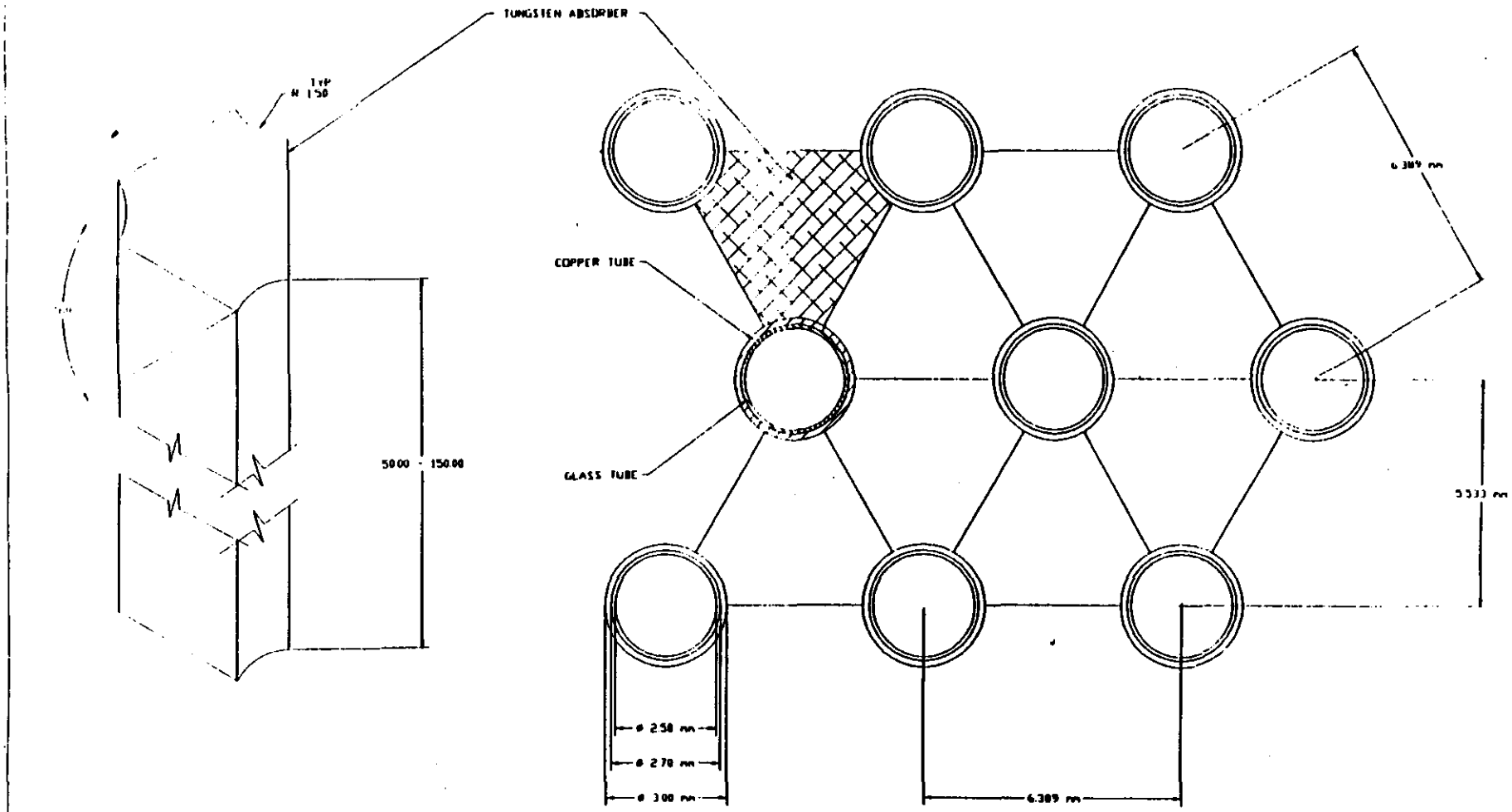
TUNGSTEN ABSORBER
TYP
R 150
50.00 - 150.00
COPPER TUBE
GLASS TUBE
6.389 mm
5.533 mm
ø 2.58 mm
ø 2.70 mm
ø 3.00 mm
6.389 mm

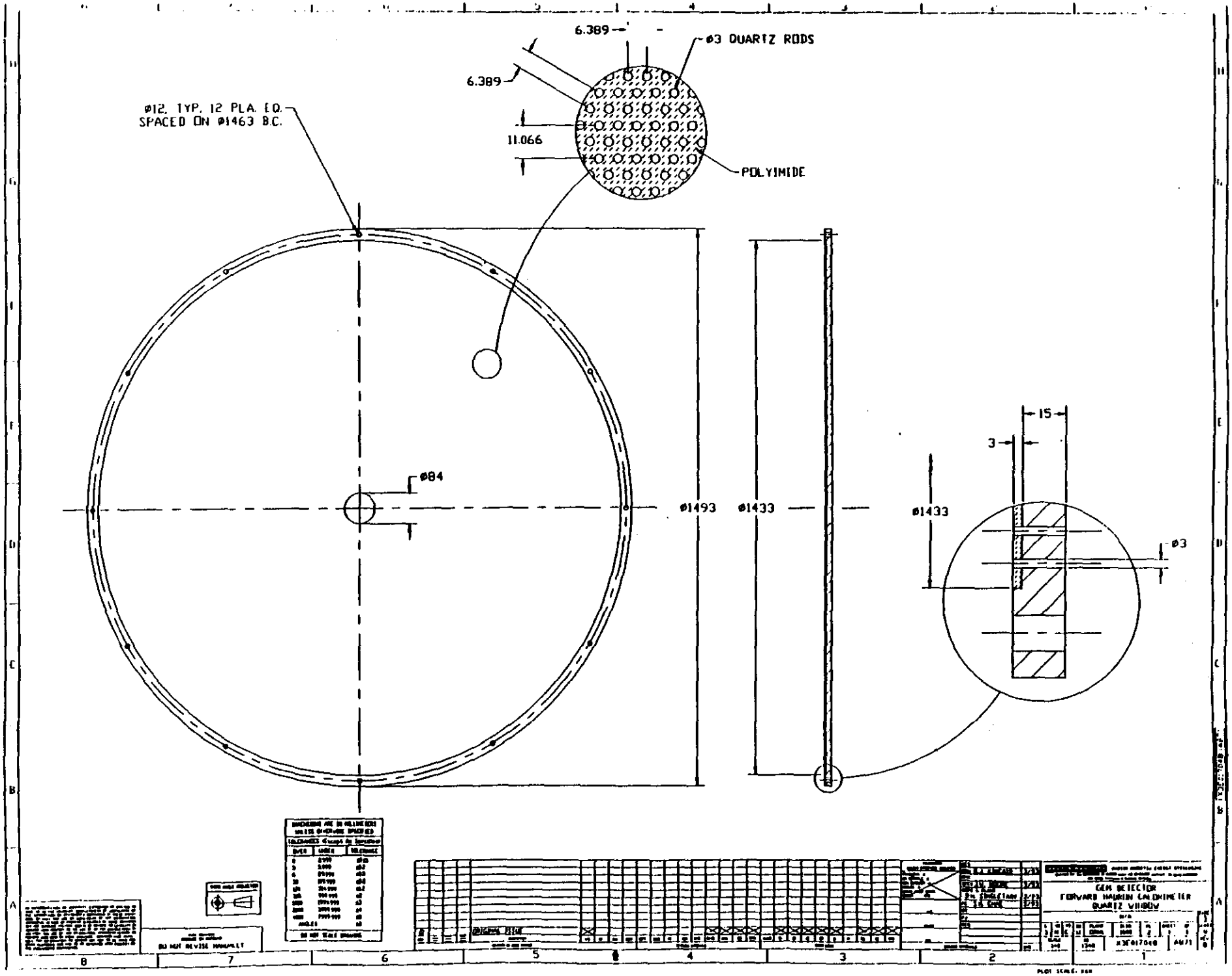
6.389
ø3 QUARTZ RODS
6.389
11.066
POLYIMIDE
ø12, TYP. 12 PLA. EQ.
SPACED ON ø1463 B.C.
ø84
ø1493
ø1433
ø1433
15
3
ø3
GEM DETECTOR
FORWARD HADRON CALORIMETER
QUARTZ WINDOW

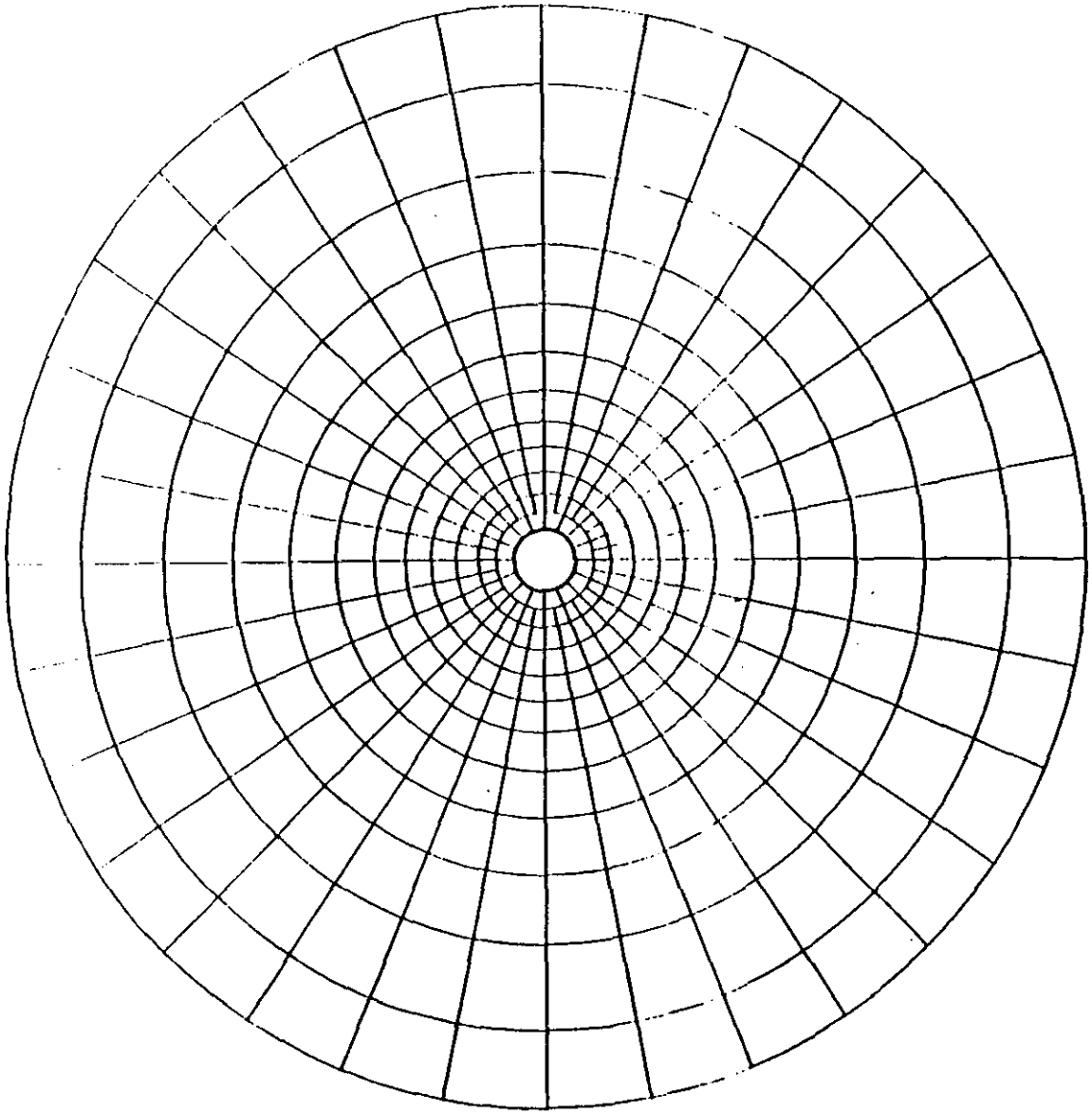

RING NUMBER	LTA	RADIUS
1.0	5.63	42.00
1	5.20	64.78
2	4.90	88.67
3	4.60	118.04
4	4.35	151.58
5	4.15	185.15
6	3.95	226.17
7	3.75	276.30
8	3.55	337.56
9	3.35	412.47
10	3.15	504.10
11	2.95	616.26
12	2.00	716.68

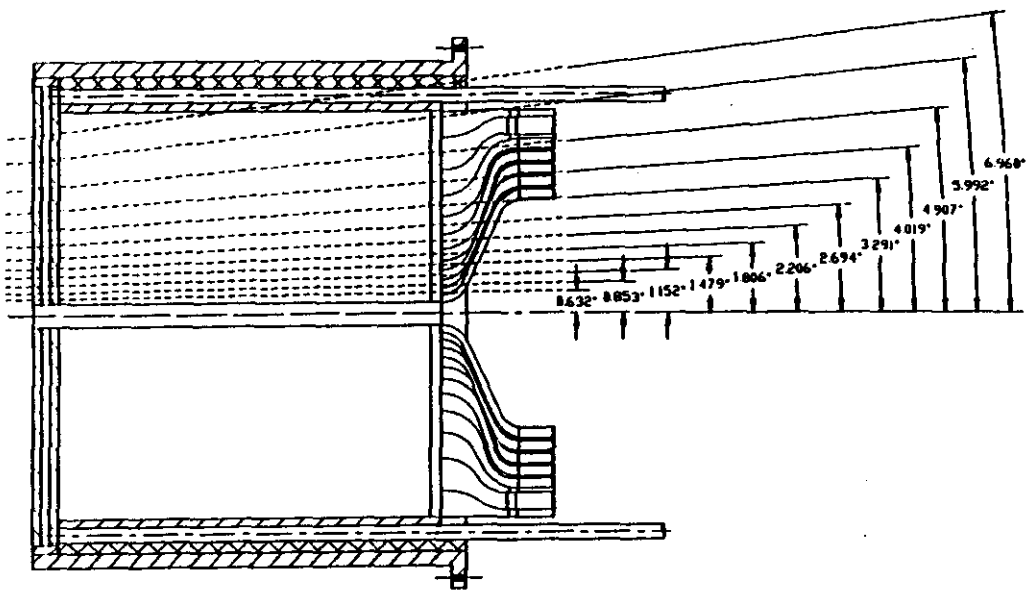

SECTION "A"-"A"

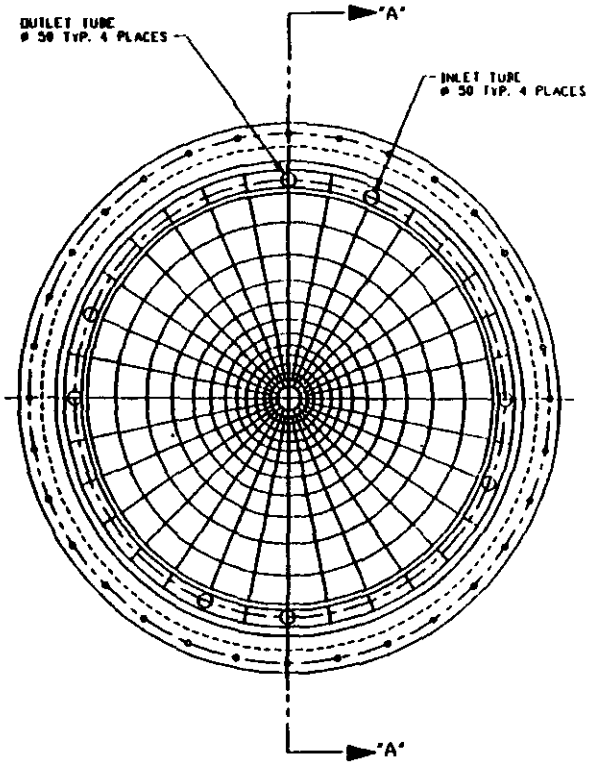

GEM DETECTOR
FORWARD HADRON CALORIMETER
SEGMENTATION SHT 1

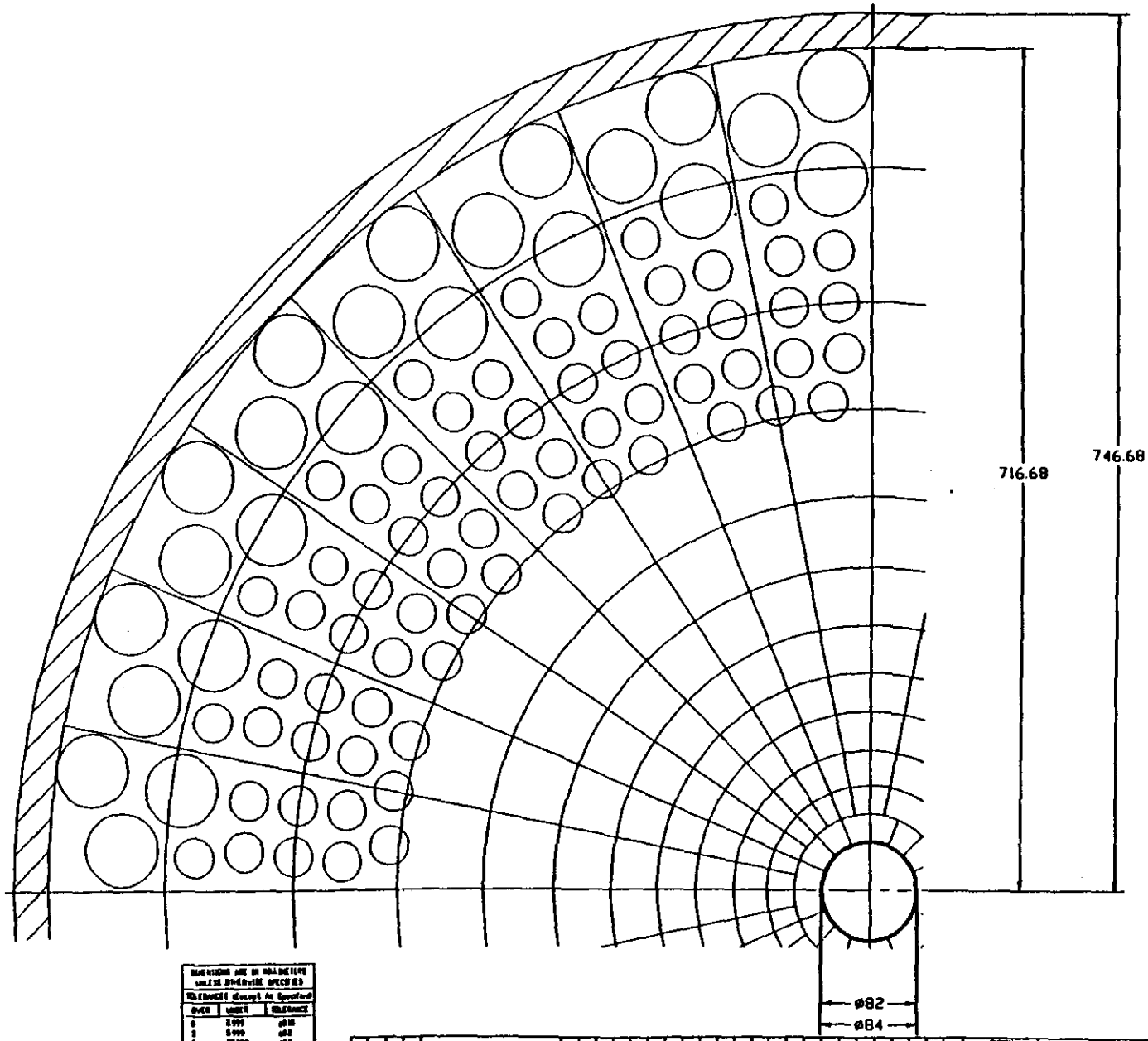

DIMENSIONS ARE IN MILLIMETERS UNLESS OTHERWISE SPECIFIED

TOLERANCE Except As Specified

OVER	UNDER	TOLERANCE
0	3.999	±0.10
3	5.999	±0.2
6	29.999	±0.5
30	119.999	±0.8
120	399.999	±1.2
400	999.999	±2
1000	1999.999	±3
2000	3999.999	±4
4000	7999.999	±5
ANGLES		±2°

DO NOT SCALE DRAWING

DO NOT REVISE MANUALLY

ORIGINAL ISSUE

GEM DETECTOR
FORWARD HADRON CALORIMETER
SCINTILLATING LIQUID QUARTER SECTION

D.J. KINCAID

3.38.017046

A3000

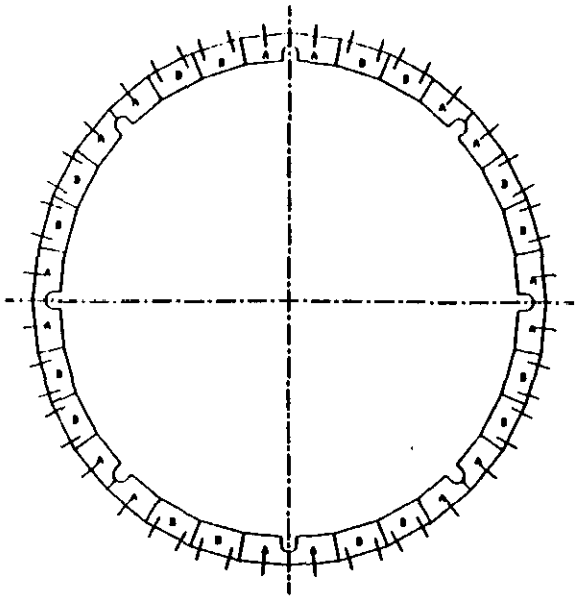

PASSIVE ABSORBER ARRANGEMENT

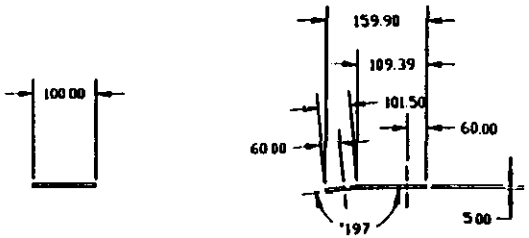

PASSIVE ABSORBER JOINER
SCALE: 1 = 2

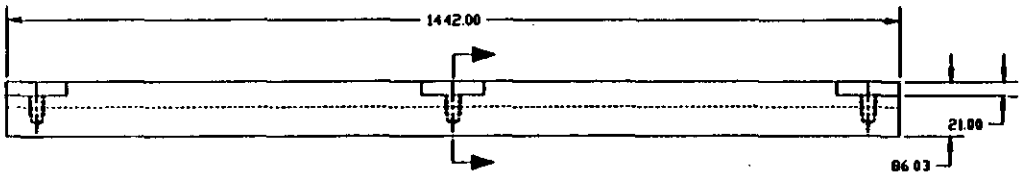

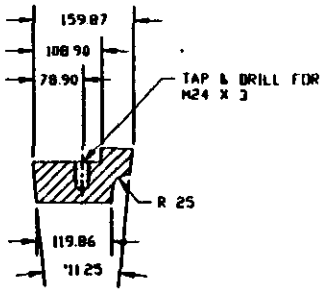

PASSIVE ABSORBER DETAIL "A"
SCALE: 1 = 2

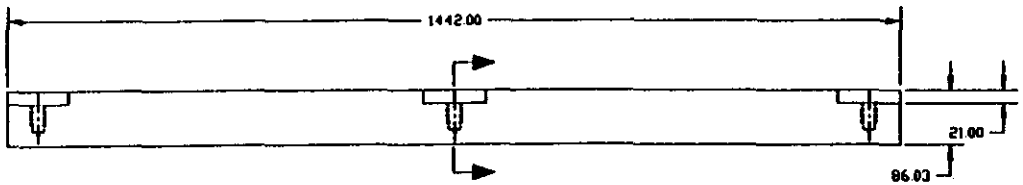

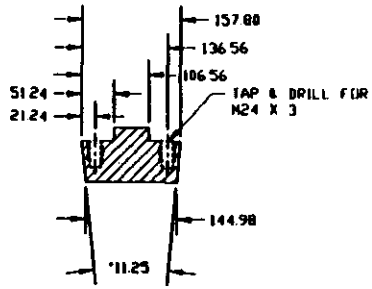

PASSIVE ABSORBER DETAIL "B"
SCALE: 1 = 2

DIMENSIONS ARE IN MILLIMETERS UNLESS OTHERWISE SPECIFIED
TOLERANCES (except as specified)

OVER	UNDER	TOLERANCE
0	3.999	±0.10
3	5.999	±0.2
6	30.999	±0.3
30	315.999	±0.5
315	1999.999	±0.8
2000	3999.999	±1.0
4000	7999.999	±1.5
ANGLES		±1°

DO NOT SCALE DRAWING

DO NOT REVISE MANUALLY

ORIGINAL ISSUE

GEN DETECTOR
FORWARD HADRON CALORIMETER
PASSIVE ABSORBER ARRANGE/DETAILS

X3E017040 AWSS

259

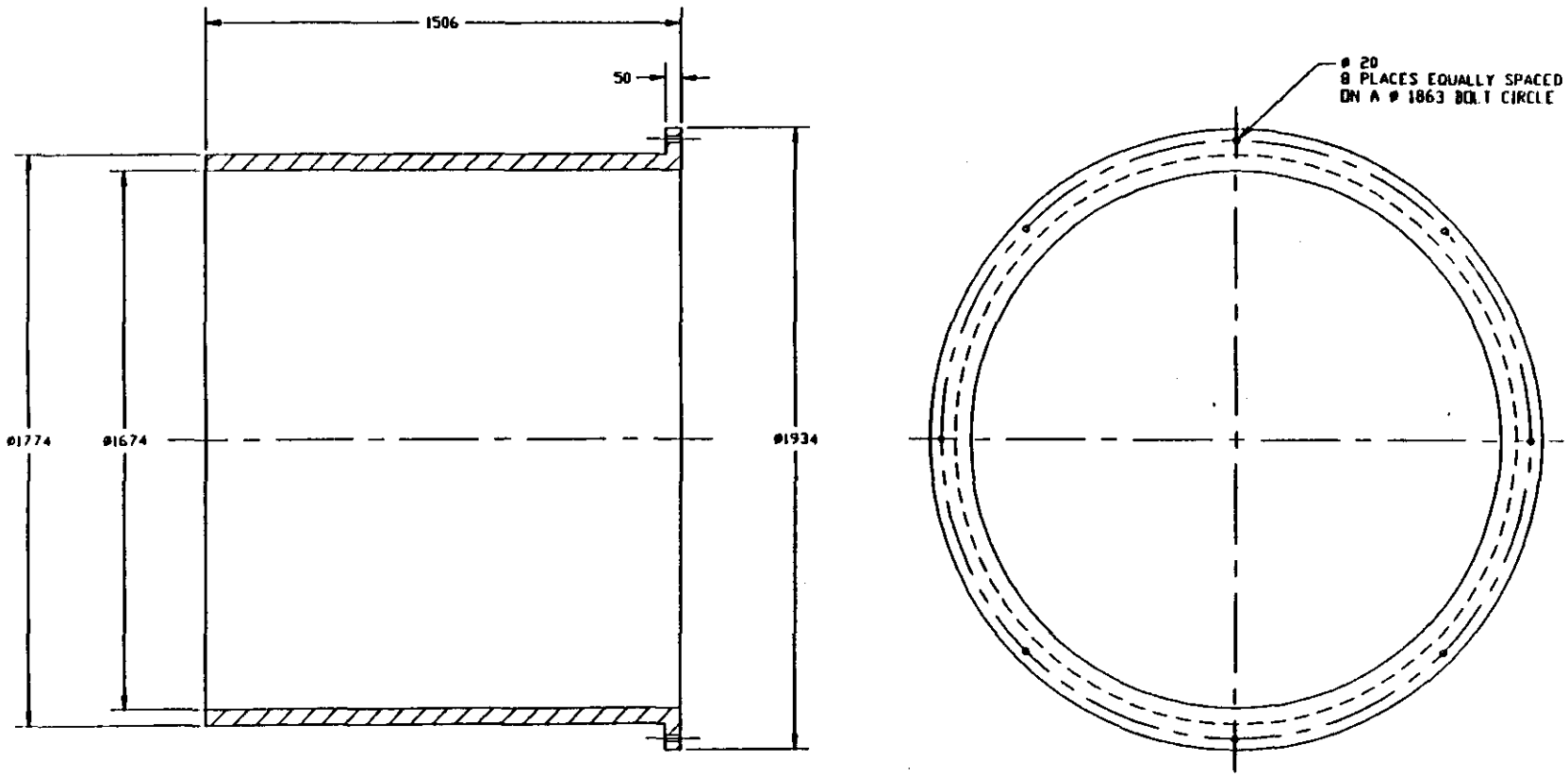

DIMENSIONS ARE IN MILLIMETERS
UNLESS OTHERWISE SPECIFIED

TOLERANCES (Except As Specified)

OVER	UNDER	TOLERANCE
0	2.999	±0.15
3	5.999	±0.2
6	29.999	±0.5
30	119.999	±0.8
120	314.999	±1.2
315	999.999	±2
1000	1999.999	±3
2000	3999.999	±4
4000	7999.999	±5
ANGLES		±2

DO NOT SCALE DRAWING

DO NOT REVISE MANUALLY

NOTE: DIMENSIONS ARE IN MILLIMETERS

GEM DETECTOR
FORWARD HADRON CALORIMETER
STRUCTURAL RING

X3E017040 A045

260

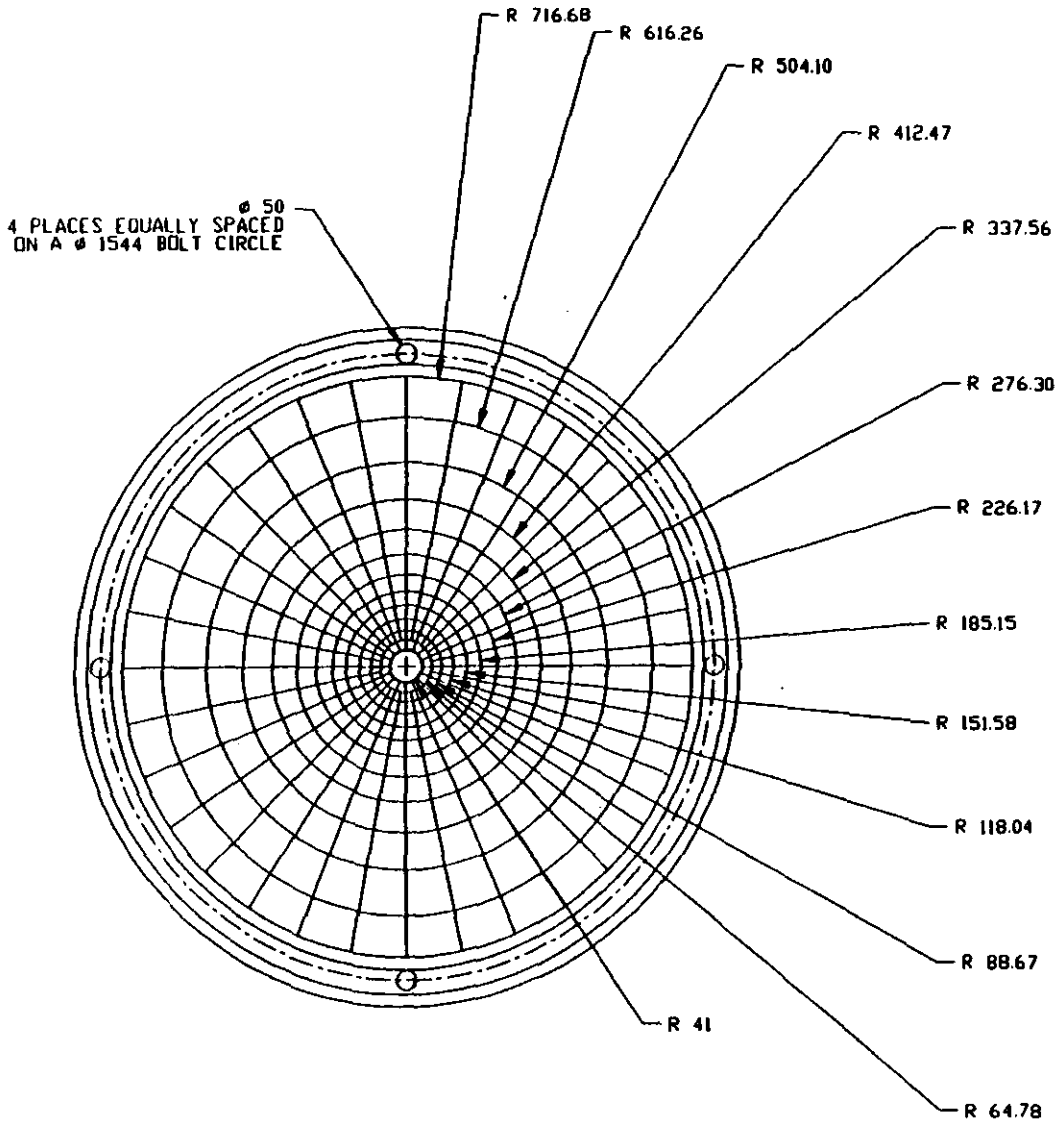

GEM DETECTOR
FORWARD HADRON CALORIMETER
SEGMENTATION SHT 2

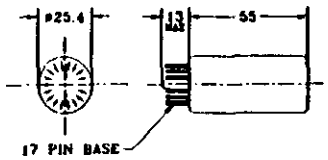

PHOTOMULTIPLIER TUBE
R3432-01

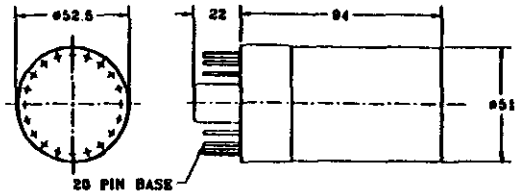

PHOTOMULTIPLIER TUBE
R2490

NOTE:

FOAM RUBBER OR A SIMILAR MATERIAL HAVING GOOD INSULATING PROPERTIES AND ELASTICITY CAN BE USED TO SECURELY HOLD THE TUBE IN THE CENTER AND AN APPROPRIATE HOLDER SHOULD BE USED TO MOUNT THE SHIELD CASE TO THE MEASUREMENT SYSTEM. WHEN TIGHTENING THE SHIELD CASE USING BANDS OR SCREWS, SUFFICIENT CARE SHOULD BE TAKEN THAT A FORCE SUFFICIENT TO DEFORM THE SHIELD CASE IS NOT APPLIED.

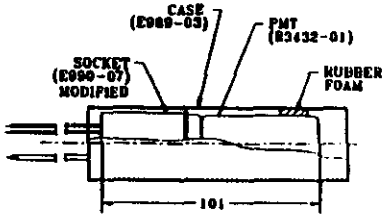

1" PMT ASSEMBLY

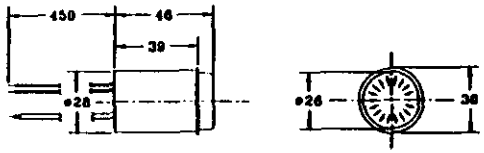

D TYPE SOCKET
E990-07
(MODIFIED)

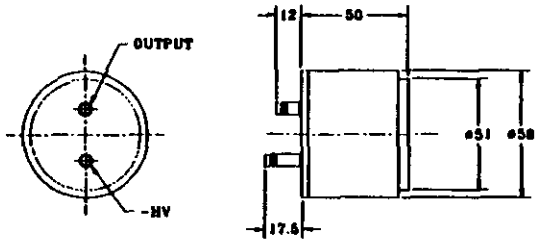

D TYPE SOCKET
E2380

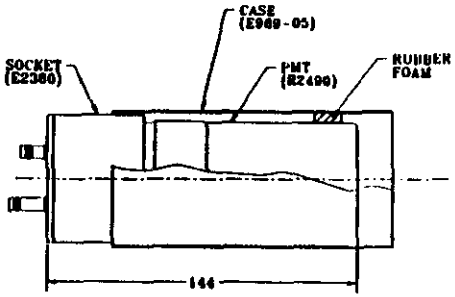

2" PMT ASSEMBLY

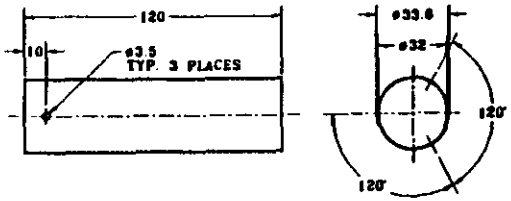

MAGNETIC SHIELD CASE
E969-03

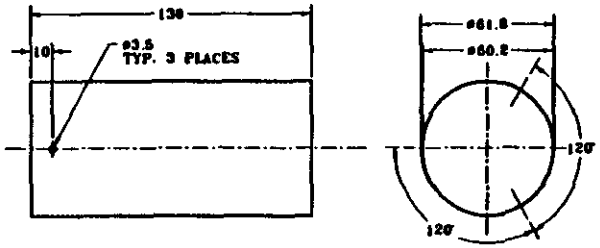

MAGNETIC SHIELD CASE
E969-05

GEN DETECTOR
FORWARD HADRON CALORIMETER
PHOTOMULTIPLIER TUBE DETAIL

262

PreProduction Prototype
of
Scintillating Barrel Module

Conceptual Design Drawings

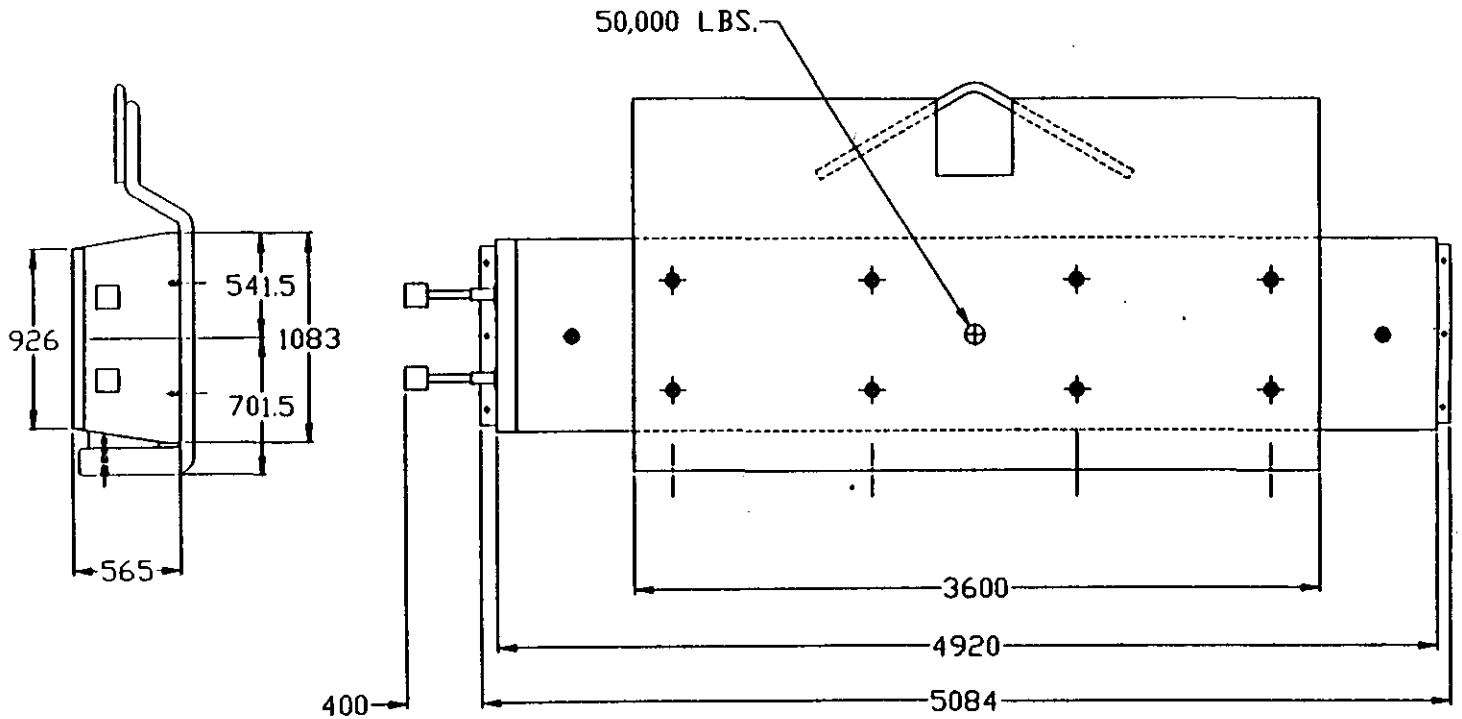

GEN DETECTOR
BARREL SCINTILLATING CALORIMETER
PROTOTYPE MODULE - GEN. ARRANGEMENT

X3C017040

4. Material Specifications

Preliminary specifications have been prepared for all significant materials to be used in the scintillating calorimeter system. The final versions of the specifications will be prepared in cooperation with the collaborating institutes involved in the fabrication and assembly of the detectors. It is assumed that changes can be made in the detail design of the calorimeters to accommodate some variations in many of the items; however, certain aspects of the specifications which are fundamental to the performance of the detectors are noted. The material specifications will be placed in the SSCL document control system as final drafts are prepared. The controlled documents will be changed using the established SSCL change control system.

The following detailed material specifications are attached:

General:

No. STC-001 Absorber Plates (Barrel and Passive End Caps)
No. STC-002 Structural Stainless Steel (All Systems)
No. STC-013 Structural Fasteners (All Systems)
No. STC-014 Electronics (Barrel and Forward)
No. STC-015 Structural Welding (All Systems)

Scintillating Barrel:

No. STC-008 Photomultiplier Tubes
No. STC-003 Scintillator Tile
No. STC-006 Wave Length Shifting Fiber
No. STC-004 Transmission Fiber
No. STC-010 Light Mixing Prism
No. STC-022 Aluminized Mylar Film*

Forward Hadron Calorimeter:

No. STC-007 Tungsten Absorber
No. STC-016 Stainless Steel Tubing
No. STC-005 Liquid Scintillator
No. STC-009 Photomultiplier Tubes
No. STC-023 Light Mixing Prism
No. STC-017 Liquid Seal*
No. STC-018 Quartz Window*
No. STC-011 Quartz Transmission Fiber

* Not currently available

SPECIFICATION NO.:.....
ISSUE DATE:
REVISION:

MATERIAL SPECIFICATION
FOR THE
ABSORBER PLATES
FOR THE
GEM DETECTOR
SCINTILLATING BARREL CALORIMETER
AT
SUPERCONDUCTING SUPER COLLIDER LABORATORY
2550 BECKLEYMEADE AVENUE
DALLAS, TEXAS 75237

APPROVED BY:

_____ _____

Mark Rennich, Technical Specialist — Date
Oak Ridge National Laboratory

SPECIFICATION NO.:

PREPARED BY:

Mark Rennich, Technical Specialist
Oak Ridge National Laboratory

Date

REVIEWED BY:

NAME, TITLE, ORG.
REQUESTER

Date

REVIEWED BY:

NAME, TITLE, ORG.
SUPERVISON

Date

REVIEWED BY:

Mike Harris, GEM Lead Engineer
SSCL Laboratory

Date

REVIEWED BY:

NAME, TITLE, ORG.
SSCL Quality Assurance

Date

REVIEWED BY:

NAME, TITLE, ORG.
ES&H Overisght; SSCL

Date

Table of Contents

Section 1.0 - SCOPE.....Page
Section 2.0 - APPLICABLE DOCUMENTS.....Page
Section 3.0 - REQUIREMENTS.....Page
Section 4.0 - QUALITY ASSURANCE PROVISIONS.....Page
Section 5.0 - PREPARATION FOR DELIVERY.....Page
Section 6.0 - NOTES.....Page

Section 1.0 - SCOPE

This specification covers the production of absorber plates and spacers for the GEM detector calorimeter. The plates and spacers shall be manufactured to specified, final dimensions for installation into the scintillating calorimeter modules. The plates will be assembled into modular stacks prior to shipment.

Section 2.0 - APPLICABLE DOCUMENTS

Paragraph 2.1 - Government Documents

The following documents of the exact issue shown form a part of this specification to the extent specified herein. In the event of conflict between the documents referenced herein and the contents of this specification, the contents of this specification shall take precedence.

Drawings:

X3E-17048-A832 GEM Detector;Scintillating Barrel; Absorber Plates
X3E-17048-A828 GEM Detector; Passive End Caps; Absorber Plates

Copies of specifications, standards, drawings, and publication required by suppliers in connection with specified procurement functions may be obtained from the SSCL/URA Subcontract Administrator.

Section 2.2 - Non-Government Documents

The following documents of the exact issue shown form a part of this specification to the extent specified herein. In the event of conflict between the documents referenced herein and the contents of this specification, the contents of this specification shall take precedence.

ASTM B36; Brass Plate, Sheet, Strip and Rolled Bar
ASTM B193;
ASTM B248M; General Requirements for Wrought Copper and Copper-Alloy Plate, Sheet, Strip and Rolled Bar [Metric]

Section 3.0 - REQUIREMENTS

Paragraph 3.1 - General Material Requirements

The absorber plates and spacers shall be either copper or copper alloy. The plates have the primary function of absorbing subatomic particles. Since the plates are configured in stacks of eight the flatness and thickness requirements are important to maintain final assembly dimensions. The GEM scintillating plates are non-structural thus, the chemical and metallurgical composition are to be determined by manufacturing, magnetic and physics requirements.

Paragraph 3.1.1 - Character or Quality

The absorber plates and spacers shall meet all requirements of ASTM B36; Brass Plate, Sheet, Strip and Rolled Bar and ASTM B248M; General Requirements for Wrought Copper and Copper-Alloy Plate, Sheet, Strip and Rolled Bar [Metric]

Paragraph 3.1.2 - Formulation

Alloy content shall have copper content in excess of ?% by weight . TBD.....

Paragraph 3.1.3 - Product characteristics

Paragraph 3.1.4 - Chemical, Electrical and Mechanical Properties

3.1.4.1 The absorber plates and spacers shall have an magnetic permeability of less than 1.05 as defined by ASTM B193.

3.1.4.2 The absorber plates and spacers shall have the following minimum mechanical properties:

Tensile Strength:	40,000 PSI (2,800 Kg/cm^2)
Hardness:	50 Rockwell B

3.1.4.3 The amount of annealing shall be determined in cooperation with the manufacturer and documented in the final specification. Specific mechanical testing methods will be determined in cooperation with the manufacturer and documented in the final specification.

Paragraph 3.1.5 - Environmental Conditions

In the GEM detector, the absorber plates will be exposed only to conventional interior ambient conditions; Temperatures will range from 20 to 50 C° and humidity will range from 10% to 90%. If the plates are exposed to exterior conditions they shall be protected from direct exposure to moisture and chemicals.

Paragraph 3.1.6 - Stability

This paragraph is not applicable to this specification

Paragraph 3.1.7 - Toxic Products and Safety

This paragraph is not applicable to this specification

Paragraph 3.1.8 - Identification and Marking

Each absorber plate shall be identified by stamped marks on each end. The marking letters shall be 0 5 cm high and clearly legible. The marking code is shown in the reference drawings.

Paragraph 3.1.9 - Workmanship

The completed absorber plates shall be clean. Specifically the surface shall be free of slag, oil or other foreign materials. The edges of the plates shall be free of defects and burrs.

Paragraph 3.2 - Qualification Inspection

A complete assembly of each modular stackup will be made to verify the final form of the plates. The modular stacks will be dimensionaly measured for determination of fitup requirements for the complete scintilating barrel detector.

Paragraph 3.3 - Differentiating Requirements

Section 4.0 - QUALITY ASSURANCE PROVISIONS

Paragraph 4.1 - Responsibilities for Inspection and Testing

All testing shall be performed by the vendor in accordance with the requirements of this specification.

Paragraph 4.2 - Special Tests and Examinations

This paragraph is not applicable to this specification

Paragraph 4.3 - Quality Conformance Inspection

Quality control testing shall include the following:

4.3.1 Alloy testing of each material batch
4.3..2 Strength testing of each material batch
4.3.3 Hardness testing of each material batch
4.3.4 Dimensional inspection of all finished plates and spacers

Paragraph 4.4 - Test Methods

Test procedures shall be proposed by the vendor in the form of written documents. The procedures shall be approved by the Company prior to use.

Section 5.0 - PREPARATION FOR DELIVERY

5.1 The absorber plates and spacers shall be adequately packaged for shipment to insure arrival in specified condition. The arrival condition of the plates shall be the responsibility of the absorber plate manufacturer.

5.2 The addition of handling and tie-down features (holes or brackets) will be acceptable with the approval of the SSCL.

Section 6.0 - NOTES

Paragraph 6.1 - Intended Use

The absorber plates will be installed in a physics detector where they will absorb particles produced by collisions in the SSCL collider system. In the scintillator barrel the plates will be stacked with spaces such that four layers of particle detector material can be inserted at regular intervals. The plates will be "passive" and serve only to shield the muon end caps from the relatively high energy particle generated at low angles.

Paragraph 6.2 - Definitions

This paragraph is not applicable to this specification

February 18, 1993

Material Specification No. SCT-001

GEM Detector
Scintillating Barrel and Passive End Caps
Absorber Plates

Reference Drawings:
X3E-17048-A832 GEM Detector;Scintillating Barrel; Absorber Plates
X3E-17048-A828 GEM Detector; Passive End Caps; Absorber Plates

Reference Documents:
ASTM B36; Brass Plate, Sheet, Strip and Rolled Bar
ASTM B248M; General Requirements for Wrought Copper and Copper-Alloy Plate, Sheet, Strip and Rolled Bar [Metric]

1.0 Introduction

This specification covers the production of absorber plates and spacers for the GEM detector calorimeter. The plates and spacers shall be manufactured to specified, final dimensions for installation into the scintillating calorimeter modules. The plates will be assembled into modules prior to shipment.

2.0 Plate Description

The absorber plates and spacers shall be either copper or copper alloy. The plates have the primary function of absorbing subatomic particles. Since the plates are configured in stacks of eight the flatness and thickness requirements are important to maintain final assembly dimensions.

2.1 Material Requirements:

The plates are non-structural thus, the chemical and metallurgical composition are to be determined by manufacturing, magnetic and physics requirements.

2.1.1 Alloy content shall have copper content in excess of 90% by weight.

2.1.2 The absorber will be subjected to very high neutron irradiation; therefore, the following elements should not be present in quantities greater than .001% by weight:
Cobalt
Arsenic

2.1.3 The absorber plates shall have an magnetic permeability of less than 1.05 as defined by ASTM B193.

2.2 Form:

Dimensions for the absorber plates are shown in the reference drawings. Tolerances for the plates shall be in accordance with ASTM B248. If alternative plate dimensions, specifically length of width, offer manufacturing or assembly advantages these should be suggested by the plate manufacturer. The method of plate sizing should be recommended by the plate manufacturer.

2.3 Surface Finish:

The completed absorber plates shall be clean. Specifically the surface shall be free of slag, oil or other foreign materials.

2.4 Mechanical Properties

The absorber plates shall have the following minimum mechanical properties:

Tensile Strength:	40,000 PSI (2,800 Kg/cm^2)
Hardness:	50 Rockwell B

The amount of annealing shall be determined in cooperation with the manufacturer and documented in the final specification. Specific mechanical testing methods will be determined in cooperation with the manufacturer and documented in the final specification.

3.0 Quality Control

3.1 Quality control requirements will be included in the final collaborative agreement. The requirements will be determined to reflect the manufacturing and assembly processes expected to be used. At this time the following specific quality control requirements are proposed for inclusion in the final agreement:

3.1.1 Alloy testing of each material batch
3.1.2 Strength testing of each material batch
3.1.3 Hardness testing of each material batch
3.1.4 Dimensional inspection of all finished plates and spacers

3.2 A mutually acceptable inspection procedure will be determined as part of the final collaborative agreement. The inspection procedure should provide for both regular progress reports and periodic on-site reviews of the manufacturing process.

3.3 The final acceptance of the plate/spacer assemblies tiles will be made at the site of manufacture by representitives of the SSCL.

4.0 Shipping Requirements

4.1 The absorber plates and spacers shall be adequately packaged for shipment to insure arrival in specified condition. The arrival condition of the plates shall be the responsibility of the absorber plate manufacturer.

4.2 The addition of handling and tie-down features (holes or brackets) will be acceptable with the approval of the SSCL.

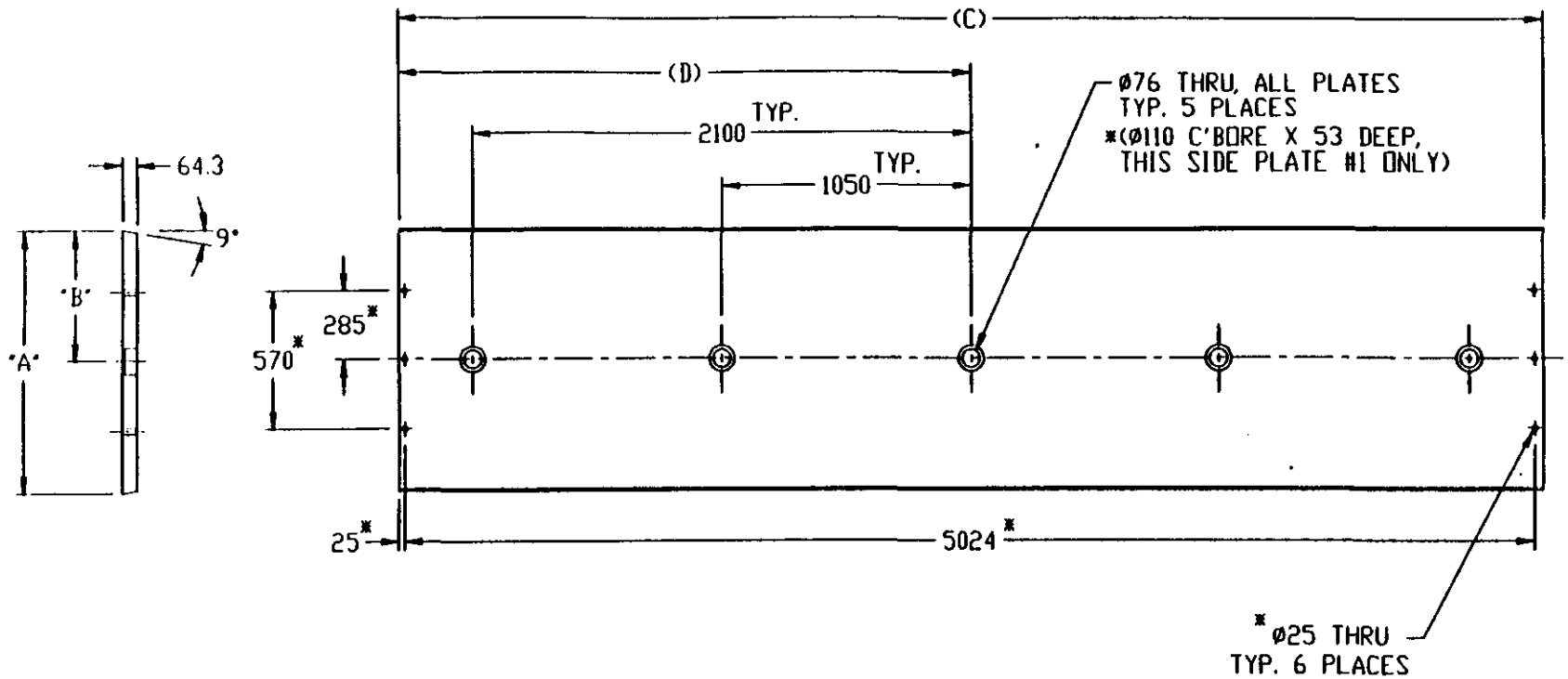

PLATE #	(A)	(B)	(C)	(D)
1*	944.6	472.3	5084	2470
2	968.8	484.4	4840	2420
3	989.2	494.6	4840	2420
4	1013.4	506.7	4840	2420
5	1033.8	516.9	4840	2420
6	1057.8	528.9	4840	2420
7	1078.2	539.1	4840	2420

*THESE HOLES AND DIMENSIONS ARE FOR PLATE #1 ONLY

GEM DETECTOR
BARREL SCINTILLATING CALORIMETER
ABSORBER PLATE DETAIL SHT 1

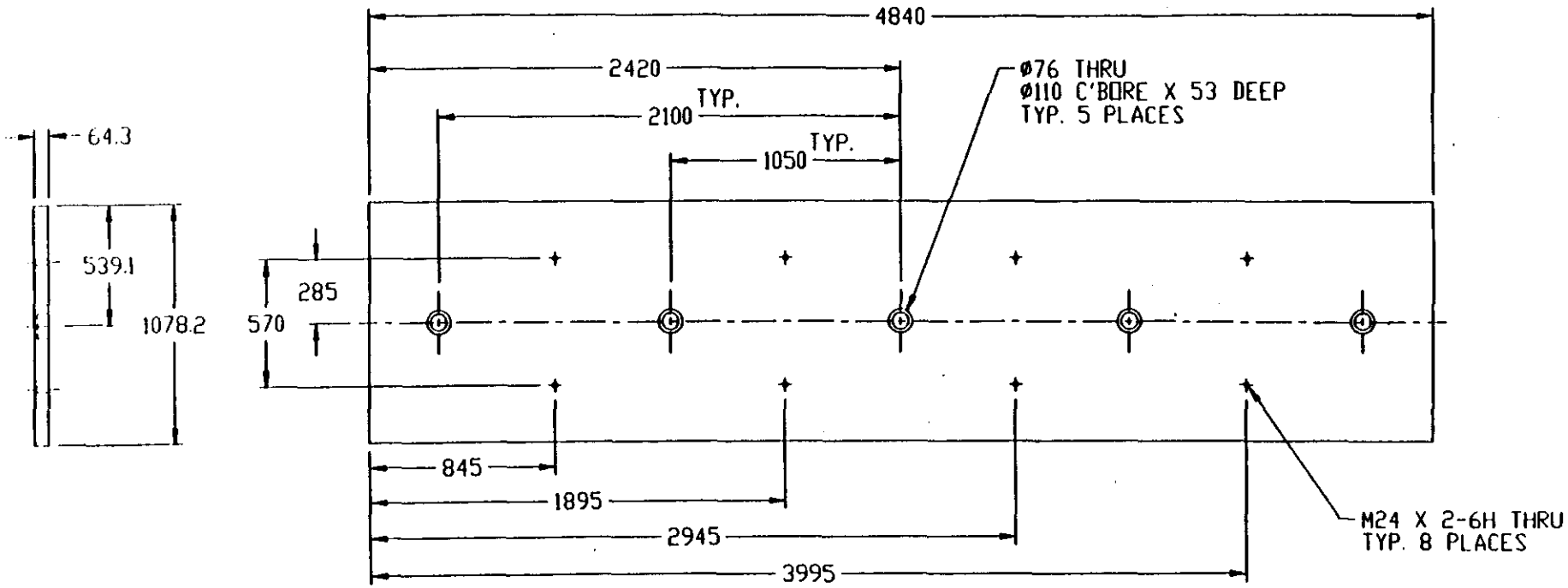

PLATE #8 DETAIL

GEM DETECTOR
BARREL SCINTILLATING CALORIMETER
ABSORBER PLATE DETAIL SHT 1

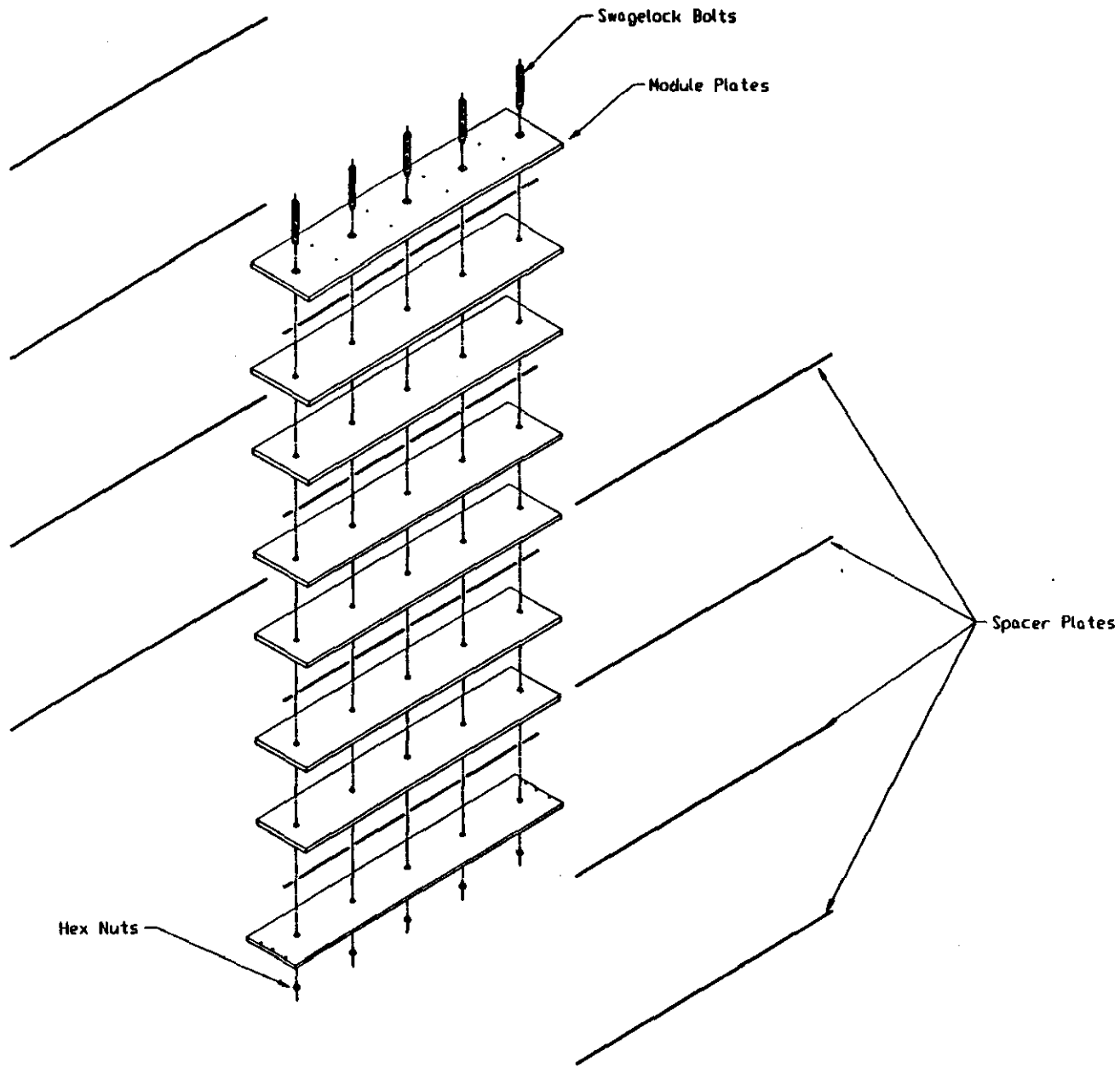

GEM DETECTOR
BASELINE TWO CALORIMETER
MODULE ASSY - EXPLODED ISO

NOTE: DIMENSIONS ARE IN MILLIMETERS

DO NOT REVISE MANUALLY

PLOT SCALE: 1:1

Fig. 6

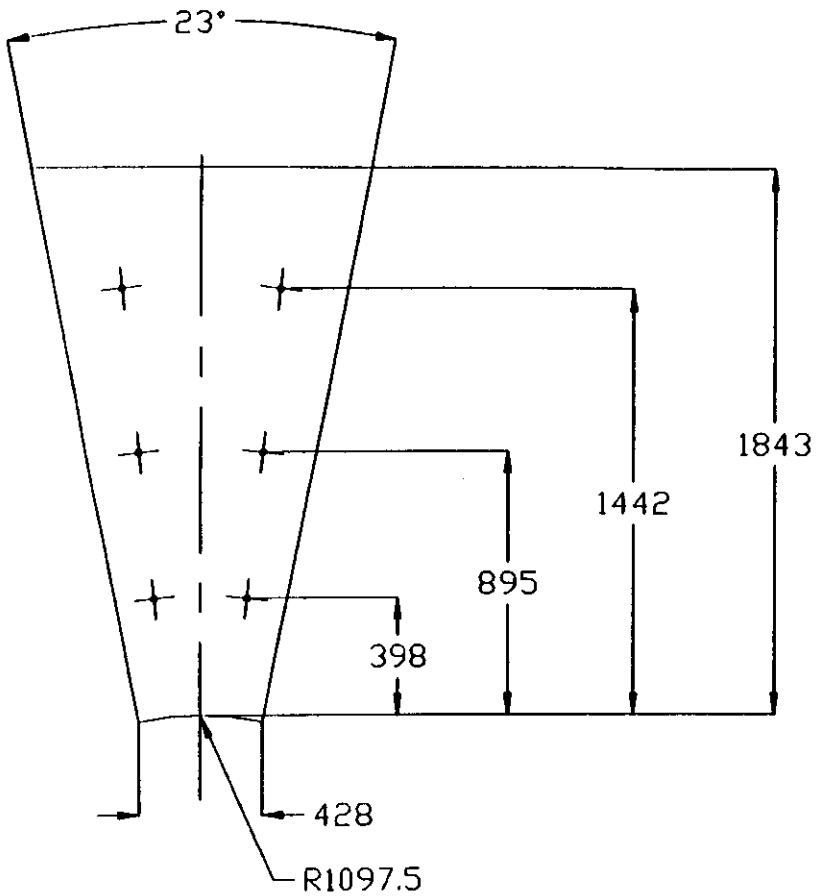

SEGMENT "A" (32 REQ'D.)
THICKNESS: 50

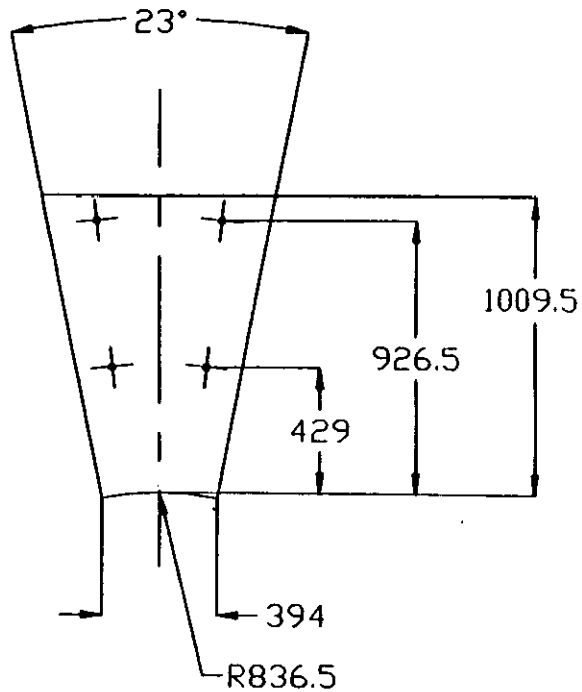

SEGMENT "B" (154 REQ'D.)
THICKNESS: 50

MAT'L: BRASS > 80% Cu

NOTE: DIMENSIONS ARE IN MILLIMETERS

GEM DETECTOR
BARREL SCINTILLATING CALORIMETER
PASSIVE ABSORBER DETAILS

N/A

X3E017048

A828

DO NOT REVISE MANUALLY

ORIGINAL ISSUE

PLOT SCALE: 1:1

260

SPECIFICATION NO.:.....
ISSUE DATE:
REVISION:

Material Specification
For The
Structural Support Tube
For The
GEM Detector
Scintillating Barrel Calorimeter
At The
Superconducting Super Collider Laboratory
2550 Beckleymeade Avenue
Dallas, Texas 75237

APPROVED BY:

Mark Rennich, Technical Specialist
Oak Ridge National Laboratory

Date

SPECIFICATION NO.:

PREPARED BY:

Mark Rennich, Technical Specialist
Oak Ridge National Laboratory

Date

REVIEWED BY:

NAME, TITLE, ORG.
REQUESTER

Date

REVIEWED BY:

NAME, TITLE, ORG.
SUPERVISON

Date

REVIEWED BY:

Mike Harris, GEM Lead Engineer
SSCL Laboratory

Date

REVIEWED BY:

NAME, TITLE, ORG.
SSCL Quality Assurance

Date

REVIEWED BY:

NAME, TITLE, ORG.
ES&H Overisght; SSCL

Date

Section 1.0 - SCOPE

This specification covers the production of a structural support assembly for the GEM detector calorimeter. The assembly shall be manufactured in subsections for final assembly at the Superconducting Super Collider Laboratory in Dallas, Texas.

Section 2.0 - APPLICABLE DOCUMENTS

Paragraph 2.1 - Government Documents

The following documents of the exact issue shown form a part of this specification to the extent specified herein. In the event of conflict between the documents referenced herein and the contents of this specification, the contents of this specification shall take precedence.

Drawings:

X3E-17048-A839 GEM Detector; Scintillating Barrel; Support Tube
X3E-17048-xxxx GEM Detector; Scintillating Barrel; Support Tube Details
X3E-17048-xxxx GEM Detector; Scintillating Barrel; Assembly Fixturing

Copies of specifications, standards, drawings, and publication required by suppliers in connection with specified procurement functions may be obtained from the SSCL/URA Subcontract Administrator.

Section 2.2 - Non-Government Documents

The following documents of the exact issue shown form a part of this specification to the extent specified herein. In the event of conflict between the documents referenced herein and the contents of this specification, the contents of this specification shall take precedence.

ASTM† A167; Standard Specification for Stainless and Heat-Resisting Chromium-Nickel Steel Plate, Sheet and Strip
ASTM B193; Standard Test Method for Resistivity of Electrical Conductor Materials.
ASTM A480M, General Requirements for Flat-Rolled Stainless and Heat-Resisting Steel Plate, Sheet and Strip.

† American Society of Testing and Materials

Alternative, comparable standards may be suggested for substitution with the approval of the Company.

Section 3.0 - REQUIREMENTS

Paragraph 3.1 - General Material Requirements

The plates have the function of forming structural supports for the modules and the calorimeter assembly. In addition the material shall not interfere with the magnetic field in the GEM detector. Thus, structural (strength) and metallurgical composition are of primary concern. Welding specifications are provided in a companion document.

Paragraph 3.1.1 - Character or Quality

The structural support material shall be ASTM A167 type 304L (UNS Designation: S30403) Plate.

Paragraph 3.1.2 - Formulation

The structural support material shall be formulated in accordance with ASTM A167 type 304L (UNS Designation: S30403) Part 8.

Paragraph 3.1.3 - Product characteristics

The plate used to form the support structure shall conform to the requirements of ASTM A480M. The plate finish shall be a No. 1 finish.

Paragraph 3.1.4 - Chemical, Electrical and Mechanical Properties

3.1.4.1 The structural support shall have a magnetic permeability of less than 1.05 as defined by ASTM B193.

3.1.4.2 The structural support material shall have mechanical properties in accordance with ASTM A167 Part 9.

Paragraph 3.1.5 - Environmental Conditions

In the GEM detector, the support structure will be exposed to conventional interior ambient conditions; Temperatures will range from 20 to 50 C° and humidity will range from 10% to 90%. If the plates are exposed to exterior conditions they shall be protected from direct exposure to moisture and chemicals.

Paragraph 3.1.6 - Stability

This paragraph is not applicable to this specification

Paragraph 3.1.7 - Toxic Products and Safety

This paragraph is not applicable to this specification

Paragraph 3.1.8 - Identification and Marking

This paragraph is not applicable to this specification

Paragraph 3.1.9 - Workmanship

The completed assembly shall be clean and free of defects. Specifically the surface shall be free of slag, oil or other foreign materials. The edges of the plates shall be free of shape corners and burrs.

Paragraph 3.2 - Qualification Inspection

Welding qualifications and a documented quality assurance program will be minimum requirements for .....????????????

Paragraph 3.3 - Differentiating Requirements

Section 4.0 - QUALITY ASSURANCE PROVISIONS

Paragraph 4.1 - Responsibilities for Inspection and Testing

All testing shall be performed by the vendor in accordance with the requirements of this specification.

Paragraph 4.2 - Special Tests and Examinations

Prior to the inception of fabrication all welders and welding equipment shall be qualified in accordance with the conditions of ????????????

Paragraph 4.3 - Quality Conformance Inspection

Quality control testing shall include the following:

4.3.1 Alloy testing of each material batch
4.3.2 Strength testing of each material batch
4.3.3 Hardness testing of each material batch
4.3.4 Dimensional inspection of all finished subassemblies prior to shipment
4.3.5 Dimensional inspection of the completed assembly

Paragraph 4.4 - Test Methods

Test procedures shall be proposed by the vendor in the form of written documents. The procedures shall be approved by the Company prior to use.

Section 5.0 - PREPARATION FOR DELIVERY

5.1 The structural support subassemblies shall be adequately packaged for shipment to insure arrival in specified condition. The arrival condition of the subassemblies shall be the responsibility of the manufacturer.

5.2 The addition of handling and tie-down features (holes or brackets) will be acceptable with the approval of the SSCL.

Section 6.0 - NOTES

Paragraph 6.1 - Intended Use

The structural support tube will support the scintillating absorber modules which are directly bolted to the interior of the tube. The modules will weight approximately 1000 metric tons. In addition, the GEM liquid calorimeter (1800 metric tons), two passive end caps (100 metric tons each) and two forward calorimeters (47 tons each) will also be positioned on the rails inside the tube. The support tube itself will be supported on the Central Detector Support (CDS).

Paragraph 6.2 - Definitions

This paragraph is not applicable to this specification

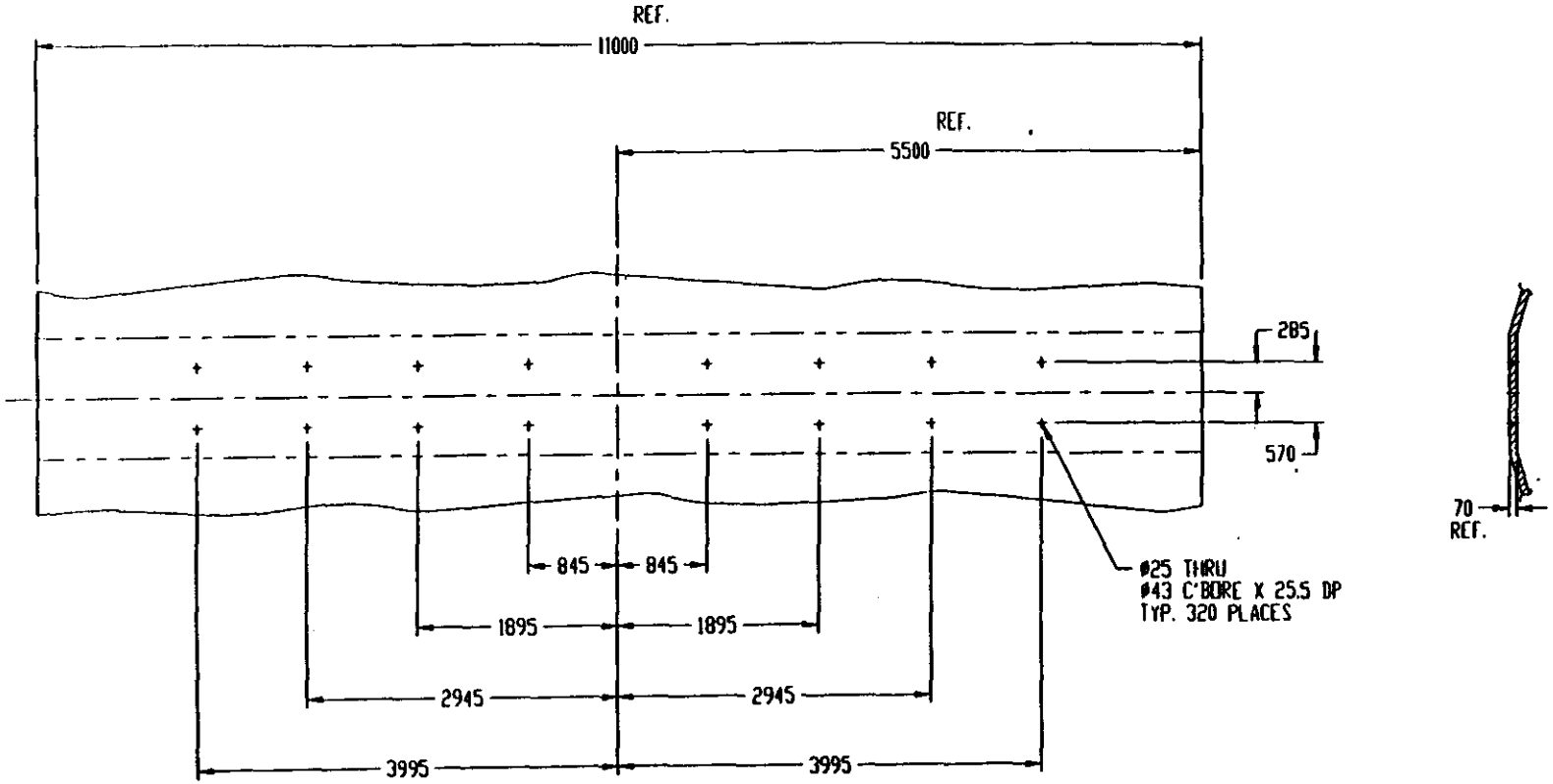

VIEW 'A' - 'A'

SEE DWGS. A813, A814, & A840
FOR MORE DETAILS

INTERFACE DIMENSION
MAT'L: NON-MAGNETIC STAINLESS STEEL

DIMENSIONS ARE IN MILLIMETERS
UNLESS OTHERWISE SPECIFIED

TOLERANCES (Except As Specified)		
OVER	UNDER	TOLERANCE
0	2.999	±0.15
3	5.999	±0.2
6	29.999	±0.5
30	119.999	±0.8
120	314.999	±1.2
315	999.999	±2
1000	1999.999	±3
2000	3999.999	±4
4000	7999.999	±5
ANGLES		±2½°

DO NOT SCALE DRAWING

GEM DETECTOR
BARREL SCINTILLATING CALORIMETER
SUPPORT TUBE DETAILS SHT 3

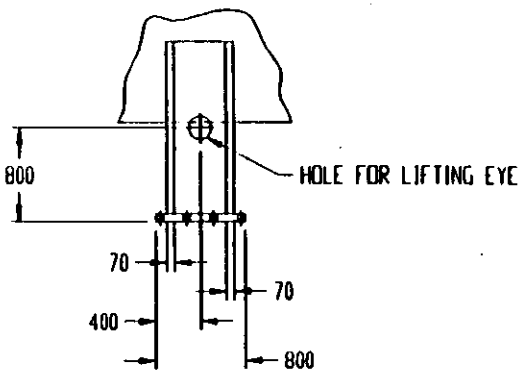

SECTION 'B' - 'B'

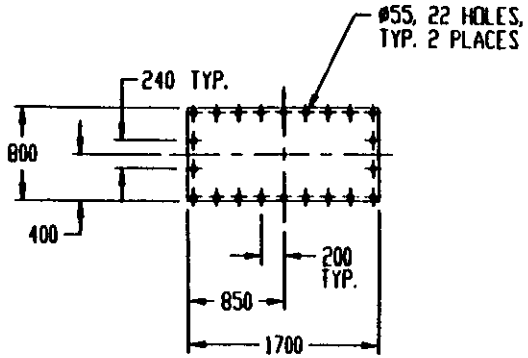

VIEW 'C' - 'C'

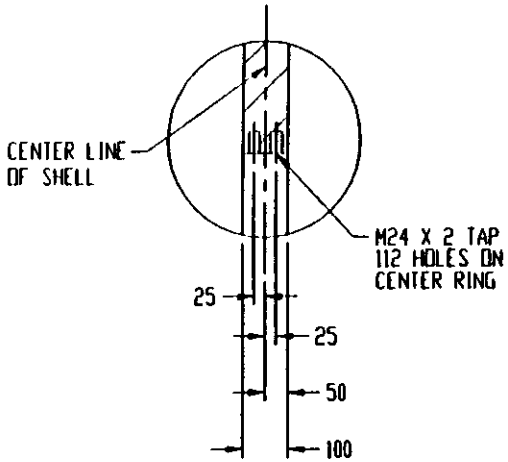

VIEW 'D' - 'D'

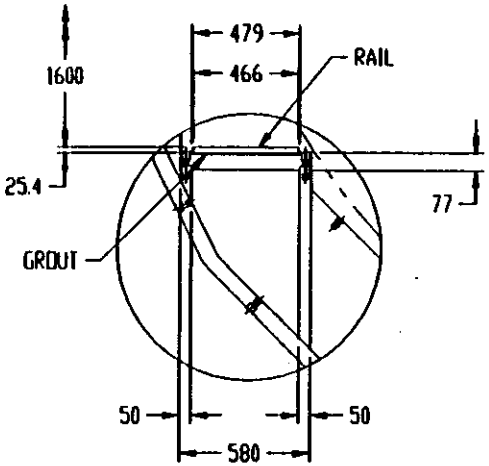

DETAIL 'F'

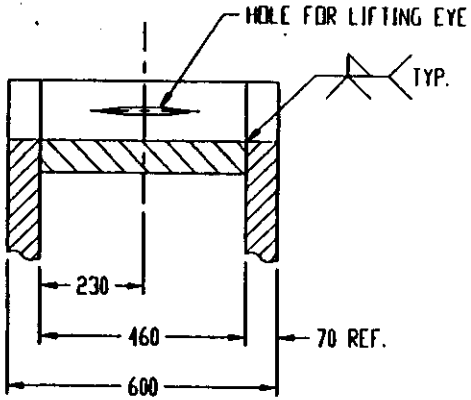

VIEW 'E' - 'E'

DIMENSIONS ARE IN MILLIMETERS UNLESS OTHERWISE SPECIFIED		
TOLERANCES (Except As Specified)		
OVER	UNDER	TOLERANCE
0	2.999	±0.15
3	5.999	±0.2
6	29.999	±0.5
30	119.999	±0.8
120	314.999	±1.2
315	999.999	±2
1000	1999.999	±3
2000	3999.999	±4
4000	7999.999	±5
ANGLES		±25'

DO NOT SCALE DRAWING

SEE DWGS. A813, A814, A839
FOR MORE DETAILS

☐ INTERFACE DIMENSION
MAT'L: NON-MAGNETIC STAINLESS STEEL

ORIGINAL ISSUE

GEM DETECTOR
BARREL SCINTILLATING CALORIMETER
SUPPORT TUBE DETAILS, SHT 4

X3C017848 | A840

DO NOT REVISE MANUALLY

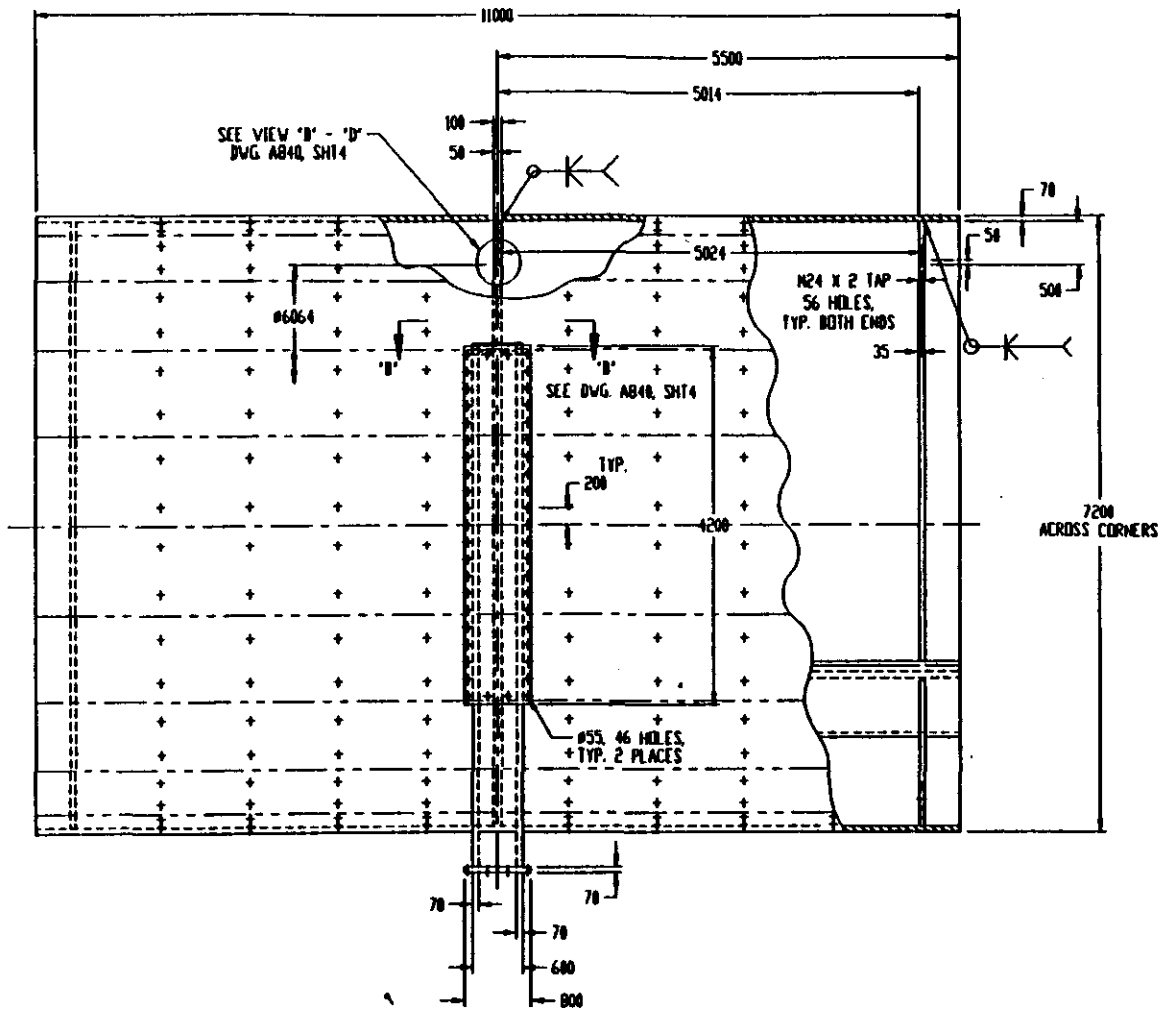

DIMENSIONS ARE IN MILLIMETERS
UNLESS OTHERWISE SPECIFIED

TOLERANCES (Except As Specified)		
OVER	UNDER	TOLERANCE
0	2.999	±0.15
3	5.999	±0.2
6	29.999	±0.5
30	119.999	±0.8
120	314.999	±1.2
315	999.999	±2
1000	1999.999	±3
2000	3999.999	±4
4000	7999.999	±5
ANGLES		±25'

DO NOT SCALE DRAWING

SEE DWGS. A814, A839, & A840
FOR MORE DETAILS

INTERFACE DIMENSION
MAT'L: NON-MAGNETIC STAINLESS STEEL

THIRD ANGLE PROJECTION

DO NOT REVISE MANUALLY

ORIGINAL ISSUE

GEM DETECTOR
BARREL SCINTILLATING CALORIMETER
SUPPORT TUBE DETAILS, SHT 1

N/A

1/12 | 1346 | N3E01764 | A813

2819

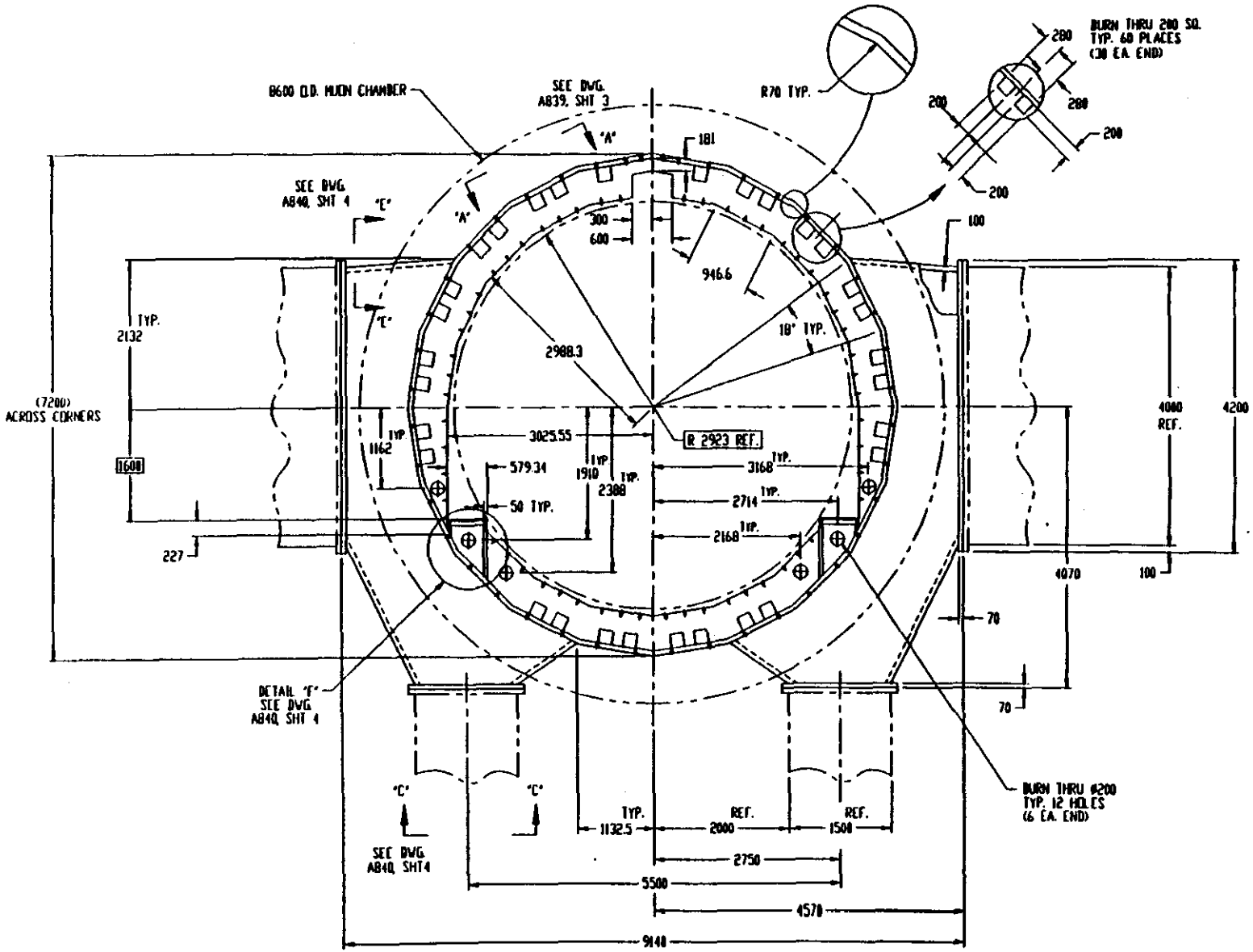

DIMENSIONS ARE IN MILLIMETERS UNLESS OTHERWISE SPECIFIED

TOLERANCES (Except As Specified)

OVER	UNDER	TOLERANCE
0	2.999	±0.15
3	5.999	±0.2
6	29.999	±0.5
30	119.999	±0.8
120	314.999	±1.2
315	999.999	±2
1000	1999.999	±3
2000	3999.999	±4
4000	7999.999	±5
ANGLES		±25'

DO NOT SCALE DRAWING

SEE DWGS. A813, A839, & A840 FOR MORE DETAILS

INTERFACE DIMENSION

MAT'L: NON-MAGNETIC STAINLESS STEEL

THIRD ANGLE PROJECTION

DO NOT REVISE MANUALLY

ORIGINAL ISSUE

GEM DETECTOR
BARREL SCINTILLATING CALORIMETER
SUPPORT TUBE DETAILS, SHT 2

X2C017040 A814

2310

February 17, 1993

Material Specification No. SCT-003

GEM Detector
Scintillating Barrel and Passive End Caps
Scintillator Tiles

Reference Drawings:

X3E-170408-A830, GEM Detector, Scintillating Barrel, Scintillator Tile.

1.0 Introduction

This specification covers the requirements for scintillator tiles for the GEM detector calorimeter. The tiles shall be manufactured to specified, final dimensions for installation into the scintillating calorimeter modules.

2.0 Plate Description

2.1 The scintillator plates have the primary function of registration of subatomic particles. In order to accomplish this function the quality of the surface finish and the chemical composition are critical.

2.2 The tiles will be fabricated from Bicron Corp. Type BC-404 or eqivalent material.

2.3 Physical properties

2.3.1	Base Material:	Polystyrene,
2.3.2	Emission spectrum:	Matched to absorption spectrum of WLS fiber (max at 430 - 450 nm for K27 WLS dye),
2.3.3	Transmission length:	> 50 cm for 60% of emitted light,
2.3.4	Light output:	≥ 60% antracene,
2.3.5	Emission time:	2-3 nsec,
2.3.6	Refraction index:	>1.58,
2.3.7	Radiation tolerance:	Transmission and light yield properties should not change more than 10% over a 10 year period in a radiation environment of 1 Krad/Year and 10^{12} Neutrons/cm^2-Year.

2.4 Dimensions

Scintillator tiles shall be manufactured in accordance with reference drawing number X3E-17048-A830. If alternative tile dimensions (length or width) offer manufacturing advantages these should be suggested by the tile manufacturer.

2.5 Manufacturing Technologies

The preferred manufacturing techniques for the tiles are either extrusion from totally polymerized granules or mold injection. Both techniques provide superior long-term surface stability. In addition, it is preferred that the fiber grooves be molded into the tiles.

2.6 Surface Finish:

All six surfaces of each scintillator tile must be clean, smooth and transparent for light at normal incidence. The surfaces must be protected with paper film for handling and shipping. The paper adhesive must be evaluated to insure that it does not have a detrimental effect on the tile surface before use.

3.0 Quality Control

3.1 Quality control requirements will be included in the final collaborative agreement. The requirements will be determined to reflect the manufacturing and assembly processes expected to be used. At this time the following specific quality control requirements are proposed for inclusion in the final agreement:

3.1.1 Light output testing of each material batch,
3.1.2 Light output testing of each material batch,
3.1.3 Chemical Composition testing of each material batch,
3.1.4 Surface quality inspection of all finished plates,
3.1.5 Dimensional inspection of all finished plates,

3.2 A mutually acceptable inspection procedure will be determined as part of the final collaborative agreement. The inspection procedure will provide for both regular progress reports and periodic on-site reviews.

3.3 The final acceptance of the scintillator tiles will be made by representities of the SSCL at the site of manufacture.

3.4 A system of material tracking will be established prior to the start of production. Tracking will include the identification of the base material in each tile and the designated position in the detector of each tile. An identification method which does not interfere with the performance of the tiles should be used.

4.0 Shipping Requirements

Packaging and shipping shall be accomplished in a manner which insures the arrival of tiles in specified condition. The arrival condition of the tiles shall be the responsibility of the manufacturer.

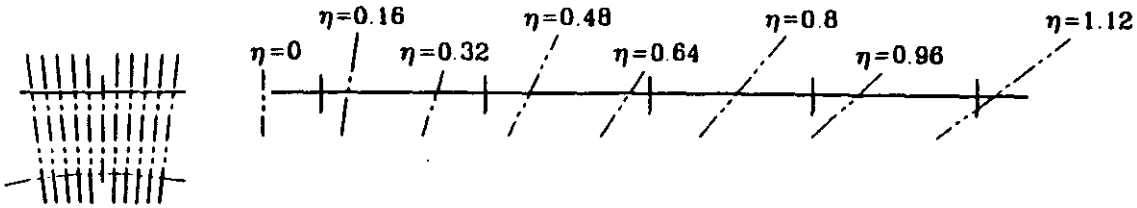

1	7	13	19	25	31	37	43
2	8	14	20	26	32	38	44
3	9	15	21	27	33	39	45
4	10	16	22	28	34	40	46
5	11	17	23	29	35	41	47
6	12	18	24	30	36	42	48

TILE NO.	"L"	"W"	"A"	"B"	"C"
1	4962	761	19	30	X
2	4962	901	225	45	X
3	4962	896	224	448	X
4	4962	892	223	446	X
5	4962	889	222	444	X
6	4962	813	203	406	3186
7	5616	761	19	30	X
8	5616	901	225	45	X
9	5616	896	224	448	X
10	5616	892	223	446	X
11	5616	889	222	444	X
12	5616	813	203	406	X
13	5899	761	19	30	X
14	5899	901	225	45	X
15	5899	896	224	448	X
16	5899	892	223	446	X
17	5899	889	222	444	X
18	5899	813	203	406	3098
19	6344	761	19	30	X
20	6344	901	225	45	X
21	6344	896	224	448	X
22	6344	892	223	446	X
23	6344	889	222	444	X
24	6344	813	203	406	X

TILE NO.	"L"	"W"	"A"	"B"	"C"
25	6935	761	19	30	X
26	6935	901	225	45	X
27	6935	896	224	448	X
28	6935	892	223	446	X
29	6935	889	222	444	X
30	6935	813	203	406	1345
31	7717	761	19	30	X
32	7717	901	225	45	X
33	7717	896	224	448	X
34	7717	892	223	446	X
35	7717	889	222	444	X
36	7717	813	203	406	4985
37	8687	761	19	30	X
38	8687	901	225	45	X
39	8687	896	224	448	X
40	8687	892	223	446	X
41	8687	889	222	444	X
42	8687	813	203	406	7684
43	2171	761	19	30	X
44	2171	901	225	45	X
45	2171	896	224	448	X
46	2171	892	223	446	X
47	2171	889	222	444	X
48	2171	813	203	406	X

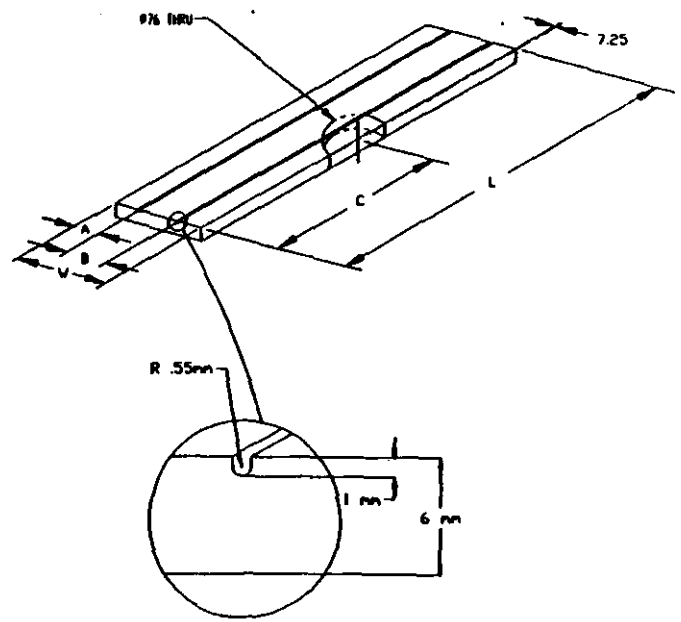

DIMENSIONS ARE IN MILLIMETERS UNLESS OTHERWISE SPECIFIED

TOLERANCES (Except As Specified)

OVER	UNDER	TOLERANCE
0	2.999	±0.5
3	5.999	±0.3
6	29.999	±0.3
30	99.999	±0.4
100	299.999	±0.8
300	999.999	±1
1000	2999.999	±1
3000	7999.999	±1
8000		±1
ANGLES		±1°

DO NOT SCALE DRAWING

ORIGINAL ISSUE

DO NOT REVISE MANUALLY

GEM DETECTOR
BARREL SCINTILLATING CALORIMETER
MODULE TILE LAYER 1 DETAIL

SCALE 1/8 | SIZE D | CODE 13W | DWG NO. XX0170 | SHEET 1 OF 1 | A070

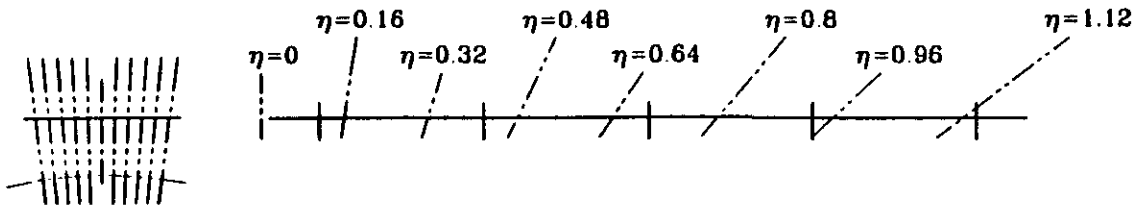

TILE NO	"L"	"W"	"A"	"B"	"C"
1	4736	72.3	10.1	36.2	X
2	4736	86.4	21.6	43.2	X
3	4736	85.8	21.5	42.9	X
4	4736	85.5	21.4	42.8	X
5	4736	85.3	21.3	42.6	X
6	4736	77.7	19.4	38.8	3186
7	5384	72.3	10.1	36.2	X
8	5384	86.4	21.6	43.2	X
9	5384	85.8	21.5	42.9	X
10	5384	85.5	21.4	42.8	X
11	5384	85.3	21.3	42.6	X
12	5384	77.7	19.4	38.8	X
13	5656	72.3	10.1	36.2	X
14	5656	86.4	21.6	43.2	X
15	5656	85.8	21.5	42.9	X
16	5656	85.5	21.4	42.8	X
17	5656	85.3	21.3	42.6	X
18	5656	77.7	19.4	38.8	3556
19	6082	72.3	10.1	36.2	X
20	6082	86.4	21.6	43.2	X
21	6082	85.8	21.5	42.9	X
22	6082	85.5	21.4	42.8	X
23	6082	85.3	21.3	42.6	X
24	6082	77.7	19.4	38.8	X

TILE NO	"L"	"W"	"A"	"B"	"C"
25	6648	72.3	10.1	36.2	X
26	6648	86.4	21.6	43.2	X
27	6648	85.8	21.5	42.9	X
28	6648	85.5	21.4	42.8	X
29	6648	85.3	21.3	42.6	X
30	6648	77.7	19.4	38.8	2308
31	7398	72.3	10.1	36.2	X
32	7398	86.4	21.6	43.2	X
33	7398	85.8	21.5	42.9	X
34	7398	85.5	21.4	42.8	X
35	7398	85.3	21.3	42.6	X
36	7398	77.7	19.4	38.8	6154
37	8329	72.3	10.1	36.2	X
38	8329	86.4	21.6	43.2	X
39	8329	85.8	21.5	42.9	X
40	8329	85.5	21.4	42.8	X
41	8329	85.3	21.3	42.6	X
42	8329	77.7	19.4	38.8	X
43	4096	72.3	10.1	36.2	X
44	4096	86.4	21.6	43.2	X
45	4096	85.8	21.5	42.9	X
46	4096	85.5	21.4	42.8	X
47	4096	85.3	21.3	42.6	X
48	4096	77.7	19.4	38.8	91.7

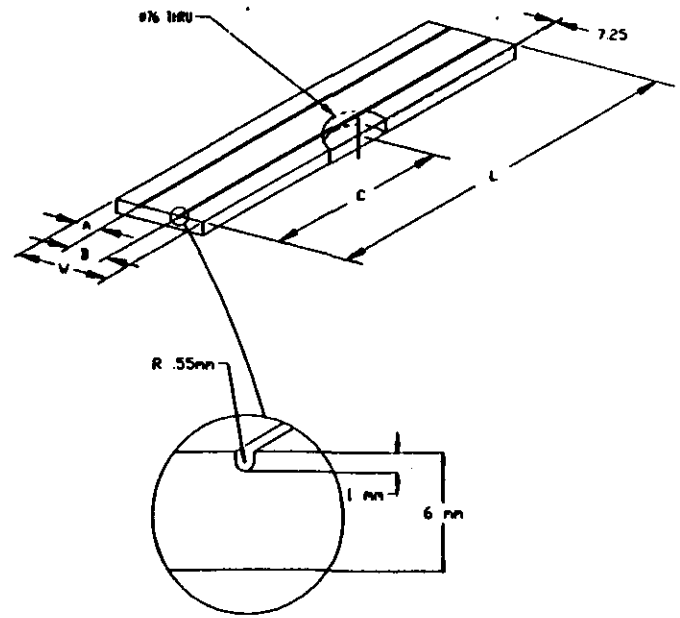

GEM DETECTOR
BARREL SCINTILLATING CALORIMETER
MODULE TILE LAYER 2 DETAIL

X-017046 A079

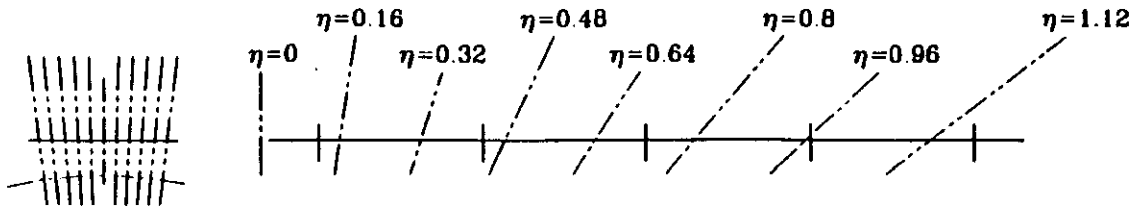

TILE NO.	"L"	"W"	"A"	"B"	"C"
1	451	68.5	17.1	34.3	X
2	451	82.6	20.7	41.3	X
3	451	82.1	20.5	41	X
4	451	81.8	20.5	40.9	X
5	451	81.6	20.4	40.8	X
6	451	74	18.5	37	318.6
7	515.3	68.5	17.1	34.3	X
8	515.3	82.6	20.7	41.3	X
9	515.3	82.1	20.5	41	X
10	515.3	81.8	20.5	40.9	X
11	515.3	81.6	20.4	40.8	X
12	515.3	74	18.5	37	X
13	541.2	68.5	17.1	34.3	X
14	541.2	82.6	20.7	41.3	X
15	541.2	82.1	20.5	41	X
16	541.2	81.8	20.5	40.9	X
17	541.2	81.6	20.4	40.8	X
18	541.2	74	18.5	37	401.8
19	582.1	68.5	17.1	34.3	X
20	582.1	82.6	20.7	41.3	X
21	582.1	82.1	20.5	41	X
22	582.1	81.8	20.5	40.9	X
23	582.1	81.6	20.4	40.8	X
24	582.1	74	18.5	37	X

TILE NO.	"L"	"W"	"A"	"B"	"C"
25	636.3	68.5	17.1	34.3	X
26	636.3	82.6	20.7	41.3	X
27	636.3	82.1	20.5	41	X
28	636.3	81.8	20.5	40.9	X
29	636.3	81.6	20.4	40.8	X
30	636.3	74	18.5	37	327
31	700	68.5	17.1	34.3	X
32	700	82.6	20.7	41.3	X
33	700	82.1	20.5	41	X
34	700	81.8	20.5	40.9	X
35	700	81.6	20.4	40.8	X
36	700	74	18.5	37	218.3
37	797.1	68.5	17.1	34.3	X
38	797.1	82.6	20.7	41.3	X
39	797.1	82.1	20.5	41	X
40	797.1	81.8	20.5	40.9	X
41	797.1	81.6	20.4	40.8	X
42	797.1	74	18.5	37	31.8
43	602.1	68.5	17.1	34.3	X
44	602.1	82.6	20.7	41.3	X
45	602.1	82.1	20.5	41	X
46	602.1	81.8	20.5	40.9	X
47	602.1	81.6	20.4	40.8	X
48	602.1	74	18.5	37	284.2

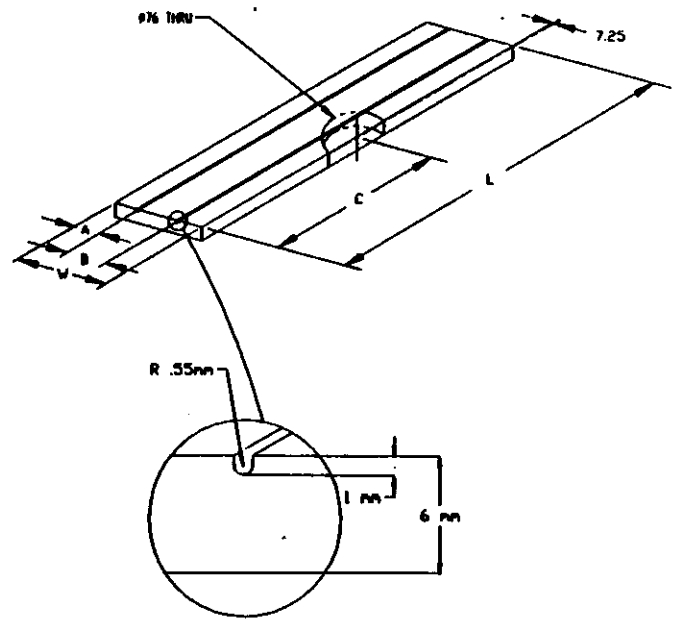

DIMENSIONS ARE IN MILLIMETERS UNLESS OTHERWISE SPECIFIED

TOLERANCES (except as specified)

DECIMAL	UNITS	TOLERANCE
1	0.999	±0.5
2	9.999	±0.1
3	99.999	±0.1
4	999.999	±0.1
5	9999.999	±0.1
6	99999.999	±0.2
7	999.999	±0
8	9999.999	±0.5
9	99999.999	±1
10	999999.999	±1.5
ANGLES		±0

DO NOT SCALE DRAWING

DO NOT REVISE MANUALLY

ORIGINAL ISSUE

GEM DETECTOR
BARREL SCINTILLATING CALORIMETER
MODULE TILE LAYER 3 DETAIL

N/A

1/8 | 1:40 | X3C0170 | A080

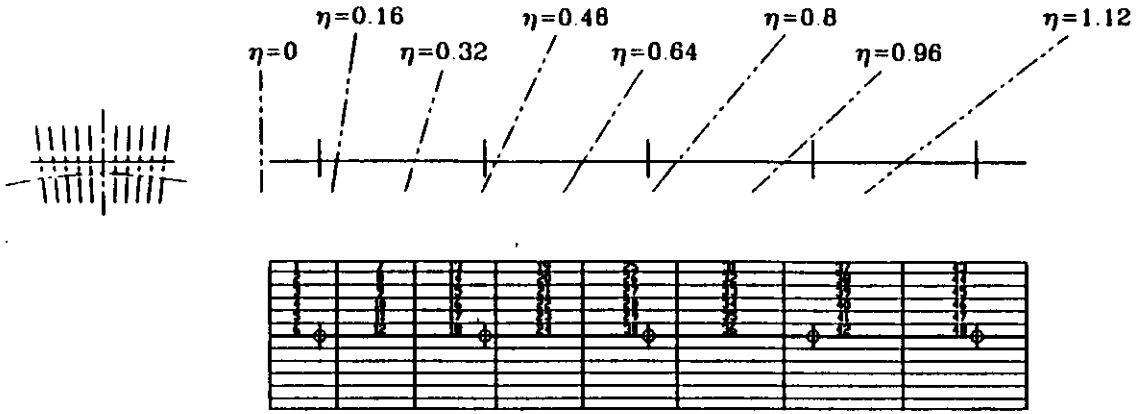

TILE NO	"L"	"W"	"A"	"B"	"C"
1	4284	648	162	324	X
2	4284	789	197	395	X
3	4284	784	196	392	X
4	4284	781	195	391	X
5	4284	779	195	39	X
6	4284	703	176	352	3186
7	4921	648	162	324	X
8	4921	789	197	395	X
9	4921	784	196	392	X
10	4921	781	195	391	X
11	4921	779	195	39	X
12	4921	703	176	352	X
13	5169	648	162	324	X
14	5169	789	197	395	X
15	5169	784	196	392	X
16	5169	781	195	391	X
17	5169	779	195	39	X
18	5169	703	176	352	4471
19	5559	648	162	324	X
20	5559	789	197	395	X
21	5559	784	196	392	X
22	5559	781	195	391	X
23	5559	779	195	39	X
24	5559	703	176	352	X

TILE NO	"L"	"W"	"A"	"B"	"C"
25	6076	648	162	324	X
26	6076	789	197	395	X
27	6076	784	196	392	X
28	6076	781	195	391	X
29	6076	779	195	39	X
30	6076	703	176	352	4233
31	6762	648	162	324	X
32	6762	789	197	395	X
33	6762	784	196	392	X
34	6762	781	195	391	X
35	6762	779	195	39	X
36	6762	703	176	352	X
37	7612	648	162	324	X
38	7612	789	197	395	X
39	7612	784	196	392	X
40	7612	781	195	391	X
41	7612	779	195	39	X
42	7612	703	176	352	1885
43	7947	648	162	324	X
44	7947	789	197	395	X
45	7947	784	196	392	X
46	7947	781	195	391	X
47	7947	779	195	39	X
48	7947	703	176	352	4768

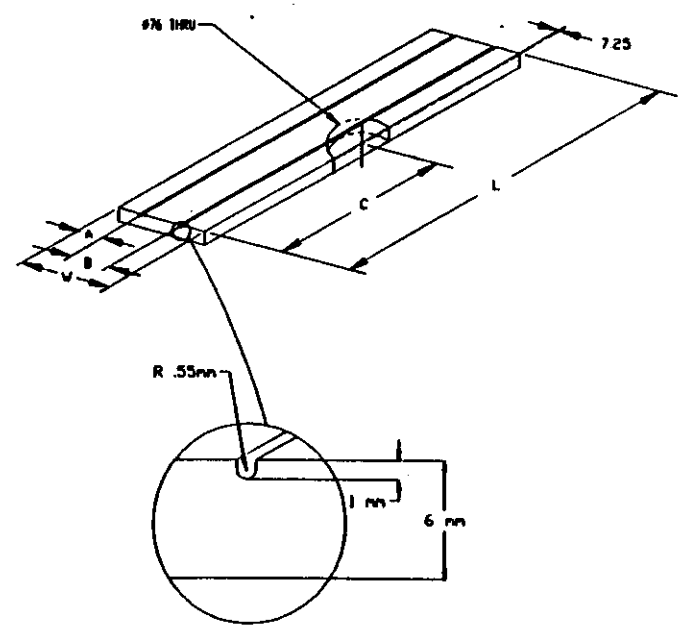

GEM DETECTOR
BARREL SCINTILLATING CALORIMETER
MODULE TILE LAYER 4 DETAIL

February 18, 1993

Material Specification No. SCT-004

GEM Detector
Scintillating Barrel
Transmission Fibers

Reference Drawings:

X3E-17048-A818; GEM Detector, Barrel Scintillating Calorimeter, Tile Configuration

1.0 Introduction

This specification covers the requirements for plastic transmission fibers for the GEM detector calorimeter. The fibers shall be manufactured to defined lenghts for installation into the scintillating barrel and forward calorimeters.

2.0 Fiber Description

2.1 The transmission fibers serve as light guides for the light emitted by the WLS fibers to the photomultiplier tubes. The fiber is covered with a thin layer of material (cladding) having a smaller index of refraction than the fiber core. The difference in the indices of refraction trap light by internal reflection. The outer surface of the cladding is covered by a buffer to protect the fiber from mechanical damage and to minimize light transfer between neighboring fibers.

2.2 The fiber shall be cccccccccc or equavalent

2.3 Physical properties

2.3.1	Core Material:	Polystyrene,
2.3.2	Cladding Material:	Fluorinated PMMA
2.3.3	Cladding Thickness:	10-30 microns,
2.3.4	Buffer Thickness:	10-30 microns,
2.3.5	Light Attenuation:	>10 m at 500 to 650 nm light,
2.3.6	Numeric Aperture:	0.71 ± 0.02,
2.3.7	Core refraction index:	1.58,
2.3.8	Cladding refraction index:	1.41,

2.3.9 Radiation hardness - In the radiation field up to 1 KRad/year and neutron flux of up to 10^12 n/cm^2/year for the duration of 10 years attenuation should degrade less than 5% , and numeric aperture should remain stable within ± 10%, for light in the 500 to 650 range.

2.4 Surface Finish:
2.4.1 Ends of fibers shall be polished.
2.4.2 Fiber ends shall be perpendicular to the axis of the fiber ±1°

3.0 Quality Control

3.1 Quality control requirements will be included in the final collaborative agreement. The requirements will be determined to reflect the manufacturing and assembly processes expected to be used. At this time the following specific quality control requirements are proposed for inclusion in the final agreement:

3.1.1 Optical transmission testing of each fiber,
3.1.2 Core/cladding refraction indices and numeric aperture testing of each fiber batch,
3.1.3 Surface quality testing of each fiber batch.

3.2 A mutually acceptable inspection procedure will be determined as part of the final collaborative agreement. The inspection procedure will provide for both regular progress reports and periodic on-site reviews of the manufacturing process.

3.3 The final acceptance of the fibers will be made at the site of manufacture by representitives of the SSCL.

3.4 A system of material tracking will be established prior to the start of production. Tracking will include the identification of the base material in each fiber and the designated position in the detector of each fiber. An identification method which does not interfere with the performance of the fibers should be used.

4.0 Shipping Requirements

4.1 Packaging and shipping shall be accomplished in a manner which insures the arrival of fibers in specified condition. The arrival condition of the fibers shall be the responsibility of the fiber manufacturer.

4.2 The fibers shall be shipped in straight lenghts.

February 18, 1993

Material Specification No. SCT-005

GEM Detector
Forward Hadron Calorimeter
Scintillating Liquid

Reference Drawings:

X3E-17048-A818; GEM Detector, Forward Hadron Calorimeter, General Arrangement

1.0 Introduction

This specification covers the requirements for scintillating liquid for the GEM detector forward hadron calorimeter. The liquid will be used in a closed loop system which is subjected to very high level of radiation. It will be continuously recycled through the detector and a filtration system to remove degraded chemical content which result from radiation damage.

2.0 Scintillating Liquid Description

2.1 The scintillating liquid will generate and transmit light in the reflective tubes of the forward hadron calorimeter. The scintillating liquid is high purity light mineral oil base with mixture of wave length shifting chemicals and an anti-oxidant preservatives. The light mineral oil must have an optical transmission length of >10 meters. The scintillating liquid output response peaks around 350 - 400 nm.

2.2 The scintillating liquid shall be Bicron Corp. BC-517 or equivalent

2.3 Physical properties

2.3.1 Base liquid: High Purity Light Mineral Oil with 5-15% Pseudo-Cumine
2.3.2 Scintillating Dye: 0.1% Bis-MSB
2.3.3 Preservative: Vitamin E

2.3.4 Radiation hardness - The operating conditions will have a radiation field up to 20 GRad/year and neutron flux of up to 10^16 n/cm^2/year for the duration of 10 years. The attenuation of the liquid should degrade to no more than 50% of the original specification after 100 MRad of radiation.

2.4 Purity:

2.4.1 Mineral Oil Base: > 99.999 % purity (?)
2.4.2 Scintillating Dye: > 99.999 % purity (?)
2.4.3 Preservative: > 99.999 % purity (?)

3.0 Quality Control

3.1 Quality control requirements will be included in the final collaborative agreement. The requirements will be determined to reflect the manufacturing and assembly processes expected to be used. At this time the following specific quality control requirements are proposed for inclusion in the final agreement:

3.1.1 Optical transmission attenuation length of each batch
3.1.2 Wave length shifting spectrum test of each batch
3.1.2 Absolute light output of each batch

3.2 A mutually acceptable inspection procedure will be determined as part of the final collaborative agreement. The inspection procedure will provide for both regular progress reports and periodic on-site reviews.

3.3 The final acceptance of the scintillating liquid will be made at the site of manufacture by representatives of the SSCL.

3.4 A system of material tracking will be established prior to the start of production. Tracking will include the identification of each batch and each container of liquid.

4.0 Shipping Requirements

Packaging and shipping shall be accomplished in a manner which insures the arrival of scintillating liquid in the condition specified above. The arrival condition of the scintillating liquid shall be the responsibility of the manufacturer.

February 18, 1993

Material Specification No. SCT-006

GEM Detector
Scintillating Barrel Calorimeter
Wave Length Shifting Fiber

Reference Drawings:

X3E-17048-A818; GEM Detector, Barrel Scintillating Calorimeter, Tile Configuration

1.0 Introduction

This specification covers the requirements for plastic wave length shifting (WLS) fibers for the GEM detector calorimeter. The fibers shall be manufactured to defined lenghts for installation into the scintillating barrel and forward calorimeters.

2.0 Fiber Description

2.1 The WLS fibers will collect light from the plastic tiles of the scintillating barrel calorimeter, shift the light wave length from ,,,, nm to ,,,,,, nm and transport the light to the transmission fiber. The fibers will be dyed and clad to provide maximum reflectivity.

2.2 The fibers shall be ,,,,,,,,,,,,,,,,,,,, or equivalent

2.3 Physical properties

2.3.1 Core Material: Polystyrene,
2.3.2 Core Dye: ,,,,,,,,,,,,,,,,
2.3.3 Cladding Material: .....,
2.3.4 Cladding Thickness: 10-30 microns,
2.3.5 Attenuation < 0.55 dB/m at 220 nm (in accordance with attached specification),
2.3.6 Numeric Aperture : 0.22 +- 0.02,
2.3.7 Core refraction index : 1.529 at 220 nm,
2.3.8 Cladding refraction index : 1.514 at 220 nm.

2.3.9 Radiation hardness - In the radiation field up to 1 KRad/year and neutron flux of up to 10^{12} n/cm^2-year for the duration of 10 years attenuation shall degrade less than 2 dB/M and numeric aperture should remain stable within ± 10%

2.4 Dimensions:

2.4.1 Fiber Shape: Cylindrical,
2.4.2 Core diameter: 0.3 mm,
2.4.3 Cladding diameter: 0.33 mm ,
2.4.4 Buffer diameter : 0.36 mm,
2.4.5 Single fiber lengths: 500 mm (see reference drawings).

2.5 Surface Finish:

2.5.1 Ends of fibers shall be polished.

2.5.2 Fiber ends shall be perpendicular to the axis of the fiber ±1°

3.0 Quality Control

3.1 Quality control requirements will be included in the final collaborative agreement. The requirements will be determined to reflect the manufacturing and assembly processes expected to be used. At this time the following specific quality control requirements are proposed for inclusion in the final agreement:

3.1.1 Optical transmission and light shifting testing of each fiber,
3.1.2 Core/cladding refraction indices and numeric aperture testing of each fiber batch,
3.1.3 Surface quality testing of each fiber batch.

3.2 A mutually acceptable inspection procedure will be determined as part of the final collaborative agreement. The inspection procedure will provide for both regular progress reports and periodic on-site reviews of the the manufacturing process.

3.3 The final acceptance of the WLS fiber will be made at the site of manufacture by representitives of the SSCL.

3.4 A system of material tracking will be established prior to the start of production. Tracking will include the identification of the base material in each fiber and the designated position in the detector of each fiber. An identification method which does not interfere with the performance of the fibers should be used.

4.0 Shipping Requirements

4.1 Packaging and shipping shall be accomplished in a manner which insures the arrival of fibers in specified condition. The arrival condition of the fibers shall be the responsibility of the fiber manufacturer.

4.2 The fibers shall be shipped in straight lenghts.

February 18, 1993

Material Specification No. SCT-007

GEM Detector
Forward Hadron Calorimeter
Tungsten Absorber

Reference Drawings:

X3E-17048-xxxx GEM Detector; Forward Hadron Calorimeter; Absorber

Reference Documents

ASTM B777; Standard Specification for Tungsten Base, High-Density Metal
ASTM B193; Standard Test Method for Resistivity of Electrical Conductor Materials.

1.0 Introduction

This specification covers the production of tungsten absorber for the GEM detector forward hadron calorimeter. The absorber shall be manufactured to specified, final dimensions and specifications for installation into the calorimeter assembly.

2.0 Material Description

The tungsten absorber has the primary function of absorbing subatomic particles. Due to the configuration of the forward system the dimensional tolerances of the absorber components are critical.

2.1 Material Requirements:

2.1.1 The tungsten absorber shall have a minimum tungsten component greater than 92% but less than 95% by weight (ASTM Grades 2 or 3).

2.1.2 The tungsten has no structural requirement thus, the chemical and metallurgical composition are to be determined by manufacturing, magnetic and physics requirements.

2.1.3 The tungsten shall have an magnetic permeability of less than 1.05 as defined by ASTM B193.

2.1.4 The tungsten will be subjected to very high neutron irradiation; therefore, the following elements should not be present in quantities greater than .001%:
Cobalt
Arsenic

2.1.5 The tungsten absorber shall have a density greater than 17.65 g/cc.

2.2 Form:

Dimensions and tolerances for the tungsten absorber are shown in the reference drawings. If alternative configurations offer manufacturing advantages these should be suggested by the absorber manufacturer.

2.3 Surface Finish:

The tungsten absorber shall be clean. Specifically the surface shall be free of slag, oil or other foreign materials.

3.0 Quality Control

3.1 Quality control requirements will be included in the final collaborative agreement. The requirements will be determined to reflect the manufacturing and assembly processes expected to be used. At this time the following specific quality control requirements are proposed for inclusion in the final agreement:

3.1.1 Chemical Analysis of each Inspection Lot per ASTM B777
3.1.2 Density testing of each Inspection Lot per ASTM B777
3.1.3 Dimensional inspection of finished parts

3.2 A mutually acceptable inspection procedure will be determined as part of the final collaborative agreement. The inspection procedure will provide for both regular progress reports and periodic on-site reviews.

3.3 The final acceptance of the tungsten absorber will be made at the site of manufacture by representitives of the SSCL.

4.0 Shipping Requirements

Packaging and shipping shall be accomplished in a manner which insures the arrival of tungsten absorber in the specified condition. The arrival condition of the tungsten absorber shall be the responsibility of the manufacturer.

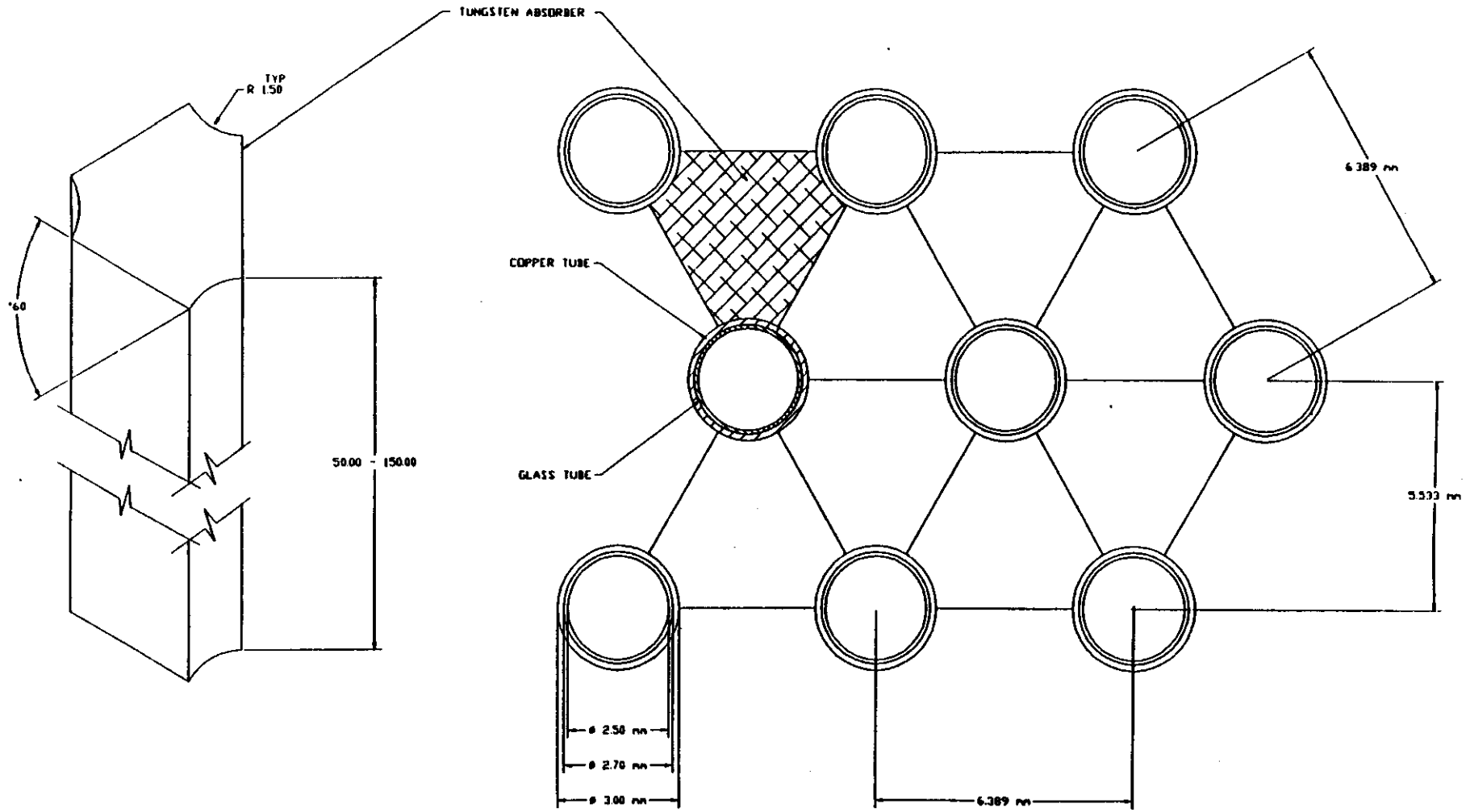

NOTE: DIMENSIONS ARE IN MILLIMETERS

FORWARD CALORIMETER
FORWARD HADRON CALORIMETER
TUNGSTEN PELLETS/TUBE ARRANGEMENT

X3E017048

A843

DO NOT REVISE MANUALLY

ORIGINAL ISSUE

PLOT SCALE: 1:1

February 18, 1993

Material Specification No. SCT-008

GEM Detector
Scintillating Barrel Calorimeter
Photomultiplier Tubes

Reference Drawings:

X3E-17048-xxxxx; GEM Detector; Scintillating Barrel;Readout Assembly

1.0 Introduction

This specification covers the requirements for photomultiplier tubes (PMT's) for the GEM detector scintillating barrel calorimeter. The PMT's will be tested to determine the performance characteristics of each individual tube the tubes will then be matched to specific locations in the detector to achieve the best uniform detector performance possible.

2.0 PMT Description

The PMT 's have the primary function of measuring and amplifying the output of the secondary light emitted by wave length shifting (WLS) fibers. The tubes will be oriented to operate in a magnetic field of 0.8 T.

2.1 Mechanical Specifications

2.1.1	Diameter:	1 cm
2.1.2	Length	10 cm (Maximum)
2.1.3	Window	Flat

2.2 Performance

2.2.1 Photocathode

Uniformity	:	±10% over 12 mm diameter circle
Quantum Efficiency	:	> 15 % at 520 nm
Lifetime photocurrent	:	1 mC for 50% gain loss
Pulsed photocurrent	:	5 % linearity for 10^6 P.E. in 10 ns
Average photocurrent	:	0.5 nA for uniform illumination

2.2.2 Multiplier

Gain	:	~10^5
Pulsed current	:	25 mA in 10 ns<1% nonlinearity, 100 mA for 10 ns with <3% nonlinearity.
Maximum Charge	:	200 mA X 10 ns = 2 nC
Rise time (20% to 80%)	:	< 4 ms (10 mA into 50 Ω load)
Fall time (80% to 20%)	:	<6 ns
Pulse width (FWHM)	:	<8 ns
Width at Baseline (5%)	:	<12 ns

Pulse change at high current	:	FWHM changes <20% for 1 mA to 50 mA.
Average anode current	:	1 μA
Lifetime	:	100 C with 50% gain loss
Anode capacitance	:	<10pf t all other electrodes combined
Inductance of anode and last dynode	:	<8 nH

2.2.3 Noise:

Single P.E.	:	<100 kHz at 0.5 of 1 P.E. peak
After pulsing	:	<0.1 %/P.E. for after;pulses >10 P.E.
Prepulseing	:	Arrival < 5 ns early amplitude <0.5% of signal from photocathode

2.2.4 Stability:

Long term	:	< 1%/month
Hysteresis	:	<1% gain shift within 100 ns after pulse of 10 mA X 10 ns.

2.2.5 Radiation Tolerance

All properties are to be stable to within ±10% after 10 KRad and 10^{13} n/cm^2 irradiation.

3.0 Quality Control

3.1 Quality control requirements will be included in the final collaborative agreement. The requirements will be determined to reflect the manufacturing and assembly processes expected to be used. At this time the following specific quality control requirements are proposed for inclusion in the final agreement:

3.1.1 Photocathode sensitivity testing of each PMT
3.1.2 Dark single photoelectron counting rate at nominal HV and gain
3.1.3 Linearity range testing of each PMT
3.1.4 Timing properties testing of each PMT

3.2 A mutually acceptable inspection procedure will be determined as part of the final collaborative agreement. The inspection procedure will provide for both regular progress reports and periodic on-site reviews.

3.3 The final acceptance of the photomultipliers will be made at the site of manufacture by representatives of the SSCL.

3.4 A system of piece part tracking will be established prior to the start of production. Tracking will include the permanent identification of each PMT. An identification method which does not interfere with the performance of the PMT's should be used.

4.0 Shipping Requirements

Packaging and shipping shall be accomplished in a manner which insures the arrival of PMT in the specified condition. The arrival condition of the PMT shall be the responsibility of the manufacturer.

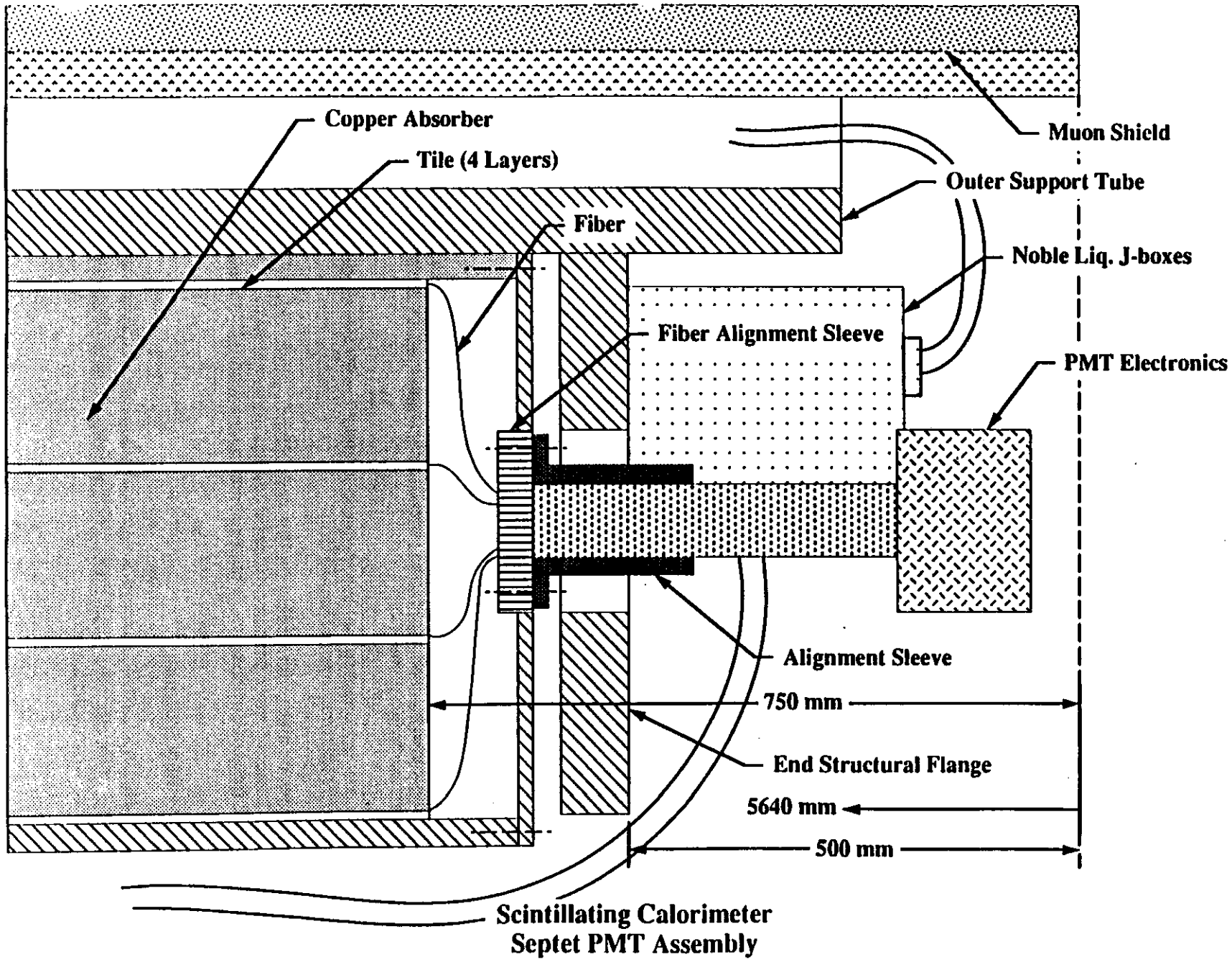
Copper Absorber
Tile (4 Layers)
Fiber
Muon Shield
Outer Support Tube
Noble Liq. J-boxes
Fiber Alignment Sleeve
PMT Electronics
Alignment Sleeve
750 mm
End Structural Flange
5640 mm
500 mm
Scintillating Calorimeter
Septet PMT Assembly

G.TC.009

ORNL

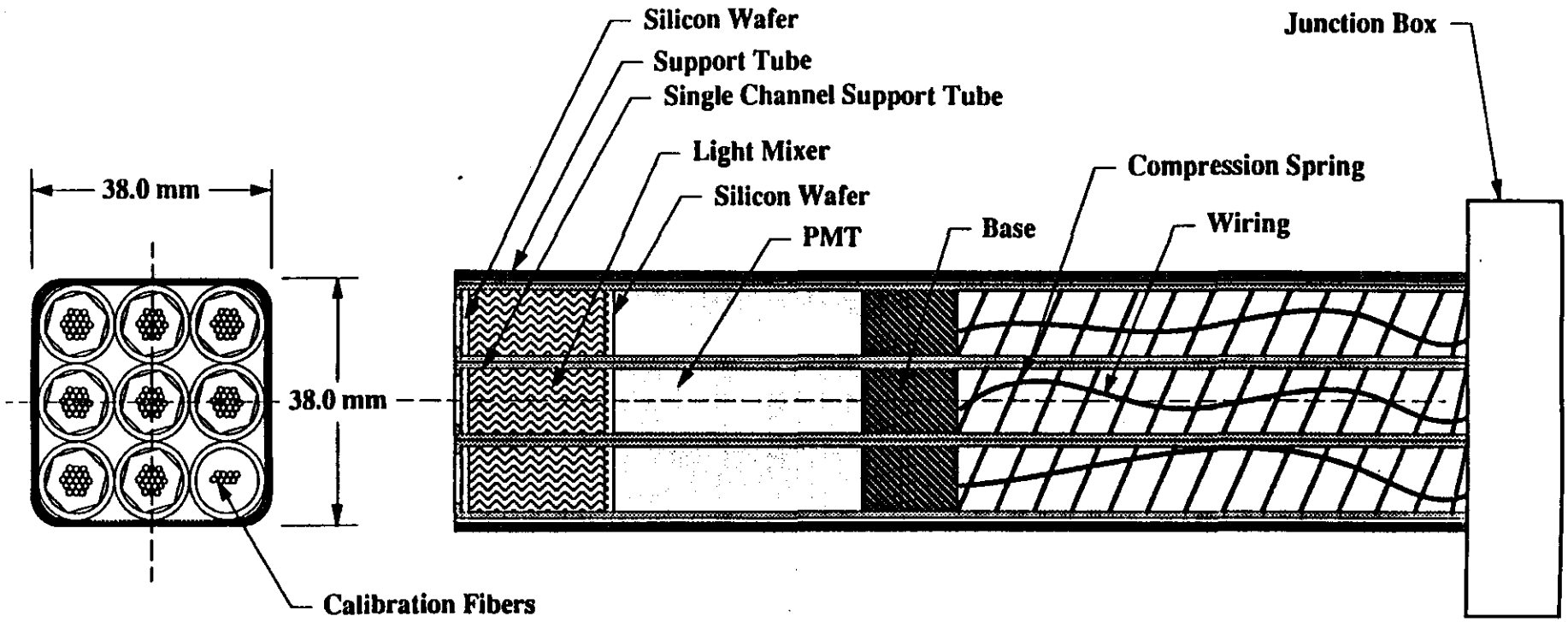

Scintillating Hadron Calorimeter
Eight PMT with One Calibration Channel
Readout Assembly

G.TC.014

ORNL
Feb 9, 1992

February 18, 1993

Material Specification No. SCT-009

GEM Detector
Forward Hadron Calorimeter
Photomultiplier Tubes

Reference Drawings:

X3E-17048-8xxx;GEM Detector;Hadron Forward Calorimeter; Readout Assembly

1.0 Introduction

This specification covers the requirements for photomultipliers (PMT) for the GEM detector quartz forward calorimeter. The PMT's shall be manufactured to specified requirements for installation into the cherenkov calorimeter.

2.0 PMT Description

2.1 The PMT's have the primary function of converting energy of incident light into photoelectrons and multiplying the photoelectrons. PMT's must be compact and high gain type. PMT's have to operate in longitudinally oriented magnetic field of 0.8 T and radiation field of up to 20 Grads over duration of 10 years. PMT's may be single anode or multianodes. Dimension given in 2.2 is for single anode PMT's.

2.2 The photomultiplier tubes shall be Hamamatsu No. R-3432-01 or equivalent.

2.3 Description and Performance Requirements

2.3.1. Spectral Response:	300 - 650 nm
2.3.2. Photocathode Material:	Bialkali
2.3.3. Minimum Useful Photocathode Diameter:	> 20 mm
2.3.4. Dynode Structure:	N/A
2.3.5. Dynode Number of Stages:	N/A
2.3.6. High Voltage Polarity:	Negative only
2.3.7. Current:	150 microA / 2500 V
2.3.8. Ambient Temperature:	-10 to +50 °C
2.3.10. Supply Voltage:	2500 V
2.3.11. Average Anode Current:	10 micro A
2.3.12. Cathode Sensitivity:	70 micro A/lm
2.3.13. Cathode Blue Sensitivity:	8.0 micro A/Blm
2.3.14. Quantum Efficiency:	20 % @ 390 nm
2.3.15. Anode Sensitivity:	35 A/lm @ 2000 V
2.3.16. Anode Dark Current:	100 nA @ 2000 V
2.3.17. Gain:	> 5E+04 @ 2000 V
2.3.18. Rise Time:	< 3.0 nsec at 2500 V
2.3.19. Fall Time:	< 10 nsec at 2500 V

2.3.20. Radiation hardness - in radiation environment of 100 MRad per year and neutron flux of up to 10^14 n/cm2/year for the time period of 10 years PMTT should maintain working parameters mentioned above.

2.4 Dimensions:

2.4.1 Length - > 10.0 cm
2.4.2 Outside diameter - > 3.8 cm
2.4.3 Minimum Effective Photcathode window diameter - 2.0 cm
2.4.4 Photcathode window - flat

3.0 Quality Control

3.1 Quality control requirements will be included in the final collaborative agreement. The requirements will be determined to reflect the manufacturing and assembly processes expected to be used. At this time the following specific quality control requirements are proposed for inclusion in the final agreement:

3.1.1 Photocathode sensitivity testing of each PMT,
3.1.2 Dark current testing of each PMT,
3.1.3 Linearity range testing of each PMT,
3.1.4 Timing properties testing of each PMT.

3.2 A mutually acceptable inspection procedure will be determined as part of the final collaborative agreement. The inspection procedure will provide for both regular progress reports and periodic on-site reviews.

3.3 The final acceptance of the photomultipliers will be made at the site of manufacture by representitives of the SSCL.

3.4 A system of piece part tracking will be established prior to the start of production. Tracking will include the permanent identification of each PMT. An identification method which does not interfere with the performance of the PMT's should be used.

4.0 Shipping Requirements

Packaging and shipping shall be accomplished in a manner which insures the arrival of PMT in the specified condition. The arrival condition of the PMT shall be the responsibility of the manufacturer.

February 18, 1993

Material Specification No. SCT-010

GEM Detector
Scintillating Barrel
Light Mixers

Reference Drawings:

X3E-17048-A818; GEM Detector, Barrel Scintillating Calorimeter, Readout Config.

Reference Documents:

ASTM D 542; Index of Refraction of Transparent Organic Plastics

1.0 Introduction

This specification covers the requirements for quartz light mixers for the GEM hadronic forward calorimeters. The mixers shall be manufactured to final form for installation into the hadronic forward calorimeters.

2.0 Light Mixer Description

The light mixers will transmit light from the transmission fibers of the hadronic forward calorimeters to the photomultiplier assemblies. The light mixers will be optically clear and will be polished to provide maximum reflectivity.

2.1 Physical properties

2.1.1 Core Material: Pure Fused Silica Quartz or equilavent
2.1.2 Attenuation: < 0.50 dB/m at 220 nm (in accordance with attached specification),
2.1.3 Core refraction index: 1.529 at 220 nm

2.1.8 Radiation hardness - In the radiation field up to 10 GRad/year and neutron flux of up to 10^16 n/cm^2/year for the duration of 10 years attenuation should degrade to no more than 2 dB/m and must remain colorless.

2.2 Dimensions:

Dimensions and tolerances are provided in reference drawings.

2.3 Surface Finish:

All surfaces of the light mixers shall be polished. The finished surfaces shall be free of pockets, wrinkles or other distortions. Light mixers will be wrapped in reflective paper to protect surfaces.

3.0 Quality Control

3.1 Quality control requirements will be included in the final collaborative agreement. The requirements will be determined to reflect the manufacturing and assembly processes expected to be used. At this time the following specific quality control requirements are proposed for inclusion in the final agreement:

3.1.1 Optical index of refraction of uncoated all light mixers,

3.2 A mutually acceptable inspection procedure will be determined as part of the final collaborative agreement. The inspection procedure will provide for both regular progress reports and periodic on-site reviews.

3.3 The final acceptance of the light mixers will be made at the site of manufacture by representitives of the SSCL.

3.4 A system of material tracking will be established prior to the start of production. Tracking will include the identification of the base material in each light mixer and the designated position in the detector of each light mixer. An identification method which does not interfere with the performance of the light mixer should be used.

4.0 Shipping Requirements

Packaging and shipping shall be accomplished in a manner which insures the arrival of light mixers in specified condition. The arrival condition of the light mixers shall be the responsibility of the manufacturer.

February 18, 1993

Material Specification No. SCT-011

GEM Detector
Hadronic Forward Calorimeter
Quartz Fibers

Reference Drawings:

1.0 Introduction

This specification covers the requirements for quartz fibers for the GEM Hadronic Forward Calorimeter. The fibers shall be manufactured to specified dimensions for installation into the readout section of the hadronic forward calorimeter.

2.0 Transmission Fiber Description

2.1 The transmission fibers will transmit light from the scintillating liquid in the hadronic forward calorimeter quartz sealing windows to the readout assemblies. The core of the fibers will be high purity silica with doped silica cladding for maximum resistance against radiation damage. The fiber is covered by radiation resistant polyimide or equivalent buffer for high radiation operating condition. The tolerance on the total diameter should be less than +- 10 microns.

2.2 The quartz fiber shall be Polymicron Technologies Inc. type FHP-300330360 or equivalent.

2.3 Physical properties

2.3.1	Core Material:	Pure fused silica or equivalent
2.3.2	Cladding Material:	Fluorine doped silica or equivalent
2.3.3	Buffer Material:	Polyimide or equivalent
2.3.4	Core Diameter:	300 ± 14 microns
2.3.5	Cladding Thickness:	15 microns
2.3.6	Buffer Thickness:	15 microns
2.3.7	Light Attenuation:	< 0.50 dB/m at 260 nm
2.3.8	Numeric Aperture:	> 0.22
2.3.9	Core refraction index:	1.529 at 220 nm
2.3.10	Cladding refraction index:	1.514 at 220 nm
2.3.11	Wavelength Transmission Range:	180 - 1100 nm
2.3.12	Operating Temperature Range:	-50 - 400 °C

2.3.13 Radiation hardness - In the radiation field up to 2 GRad/year and neutron flux of up to 10^16 n/cm^2/year for the duration of 10 years attenuation should degrade to no more than 2 dB/m and numeric aperture should remain stable within ±10%.

2.4 Form:

Dimensions and tolerances for the quartz fibers are shown in section 2.1 and the referenced drawing. If alternative fiber dimensions (specifically diameters) offer manufacturing advantages these should be suggested by the fiber manufacturer.

2.5 Surface Finish:

2.5.1 Ends of fibers shall be polished.

2.5.2 Fiber ends shall be perpendicular to the axis of the fiber $\pm 5^{o}$.

3.0 Quality Control

3.1 Quality control requirements will be included in the final collaborative agreement. The requirements will be determined to reflect the manufacturing and assembly processes expected to be used. At this time the following specific quality control requirements are proposed for inclusion in the final agreement:

3.1.1 Optical transmission testing of each fiber batch,
3.1.2 Core/cladding refraction indices and numeric aperture testing of each fiber batch,
3.1.3 Surface quality testing of each fiber batch.

3.2 A mutually acceptable inspection procedure will be determined as part of the final collaborative agreement. The inspection procedure will provide for both regular progress reports and periodic on-site reviews.

3.3 The final acceptance of the quartz fiber will be made at the site of manufacture by representitives of the SSCL.

3.4 A system of material tracking will be established prior to the start of production. Tracking will include the identification of the base material in each fiber and the designated position in the detector of each fiber. An identification method which does not interfere with the performance of the fibers should be used.

4.0 Shipping Requirements

Packaging and shipping shall be accomplished in a manner which insures the arrival of quartz fiber in specified condition. The arrival condition of the quartz fiber shall be the responsibility of the manufacturer.

February 17, 1993

Material Specification No. SCT-013

GEM Detector
External Calorimeter
Structural Fasteners

Reference Drawings:

X3E-17048-xxxx GEM Detector;Scintillating Barrel; Support Tube
X3E-17048-xxxx GEM Detector; Passive End Caps; General Arrangement
X3E-17048-xxxx GEM Detector; Hadronic Forward; General Arrangement
X3E-17048-xxxx GEM Detector; Scintillating Barrel; Module Assembly

Reference Documents:

ASTM F593; Standard Specification for Stainless Steel Bolts, Hex Cap Screws, and Studs.
ASTM F594; Standard Specification for Stainless Steel Nuts.
ASTM F467; Standard Specification for Non-Ferrous Nuts for General Use.
ASTM F468; Standard Specification for Non-Ferrous Bolts, Hex Cap Screws, and Studs for General Use.

1.0 Introduction

This specification covers the fasteners to be used in structural components for the GEM detector calorimeter. .

2.0 Fastener Description

The specific fasteners to be used are shown in the design drawings. Unified threads will be used as the standard for the scintillating calorimeter conceptual design. Metric fasteners may be used in all or portions of the final design. If meteric fasteners are specified the ASTM references will be changes accordingly

2.1 Material Requirements:

Two types of fasteners are specified; stainless steel and brass; the objective is to reduce the amount of magnetic material in the scintillating calorimeter.

2.1.1 Stainless Steel fasteners shall comply with all the requirements of the current edition of ASTM F-593. The specific type of fasteners will be shown in the reference drawings.

2.1.2 Brass fasteners shall comply with all the requirements of the current editions of ASTM F-468 and F-467. The specific type of fasteners will be shown in the reference drawings.

3.0 Quality Control

3.1 Quality control requirements will be included in the final collaborative agreement. The requirements will be determined to reflect the manufacturing and assembly processes expected to be used.

3.2 A mutually acceptable inspection procedure will be determined as part of the final collaborative agreement.

4.0 Shipping Requirements

Packaging and shipping shall be accomplished in a manner which insures the arrival of fasteners in specified condition. The arrival condition of the fasteners shall be the responsibility of the manufacturer.

February 18, 1993

Material Specification No. SCT-015

GEM Detector
Scintillating Detector
Welding: Stainless Steel

Reference Documents:

ASME Boiler and Pressure Vessel Code; Section IX

1.0 Introduction

This specification applies to structural welding of the stainless steel components of the scintillating barrel and hadronic forward calorimeter.

2.0 Requirements

2.1 Generally, structural welds should be in compliance with the requirements of the American Society of Mechanical Engineers Boiler and Pressure Vessel Code, Section IX; "Qualification Standard for Welding and Brazing Procedures, Welders, Brazers, and Welding and Brazing Operators".

2.2 The type of welding process and equipment used to produce welds will be determined by the manufacturing facility in coordination with the SSCL.

3.0 Quality Control

3.1 Quality control requirements will be included in the final collaborative agreement. The requirements will be determined to reflect the manufacturing and assembly processes expected to be used.

3.2 A mutually acceptable inspection procedure will be determined as part of the final collaborative agreement. The inspection procedure should provide for both regular progress reports and periodic on-site reviews of the manufacturing process.

February 18, 1993

Material Specification No. SCT-016

GEM Detector
Forward Hadron Calorimeter
Tubing: Stainless Steel

Reference Drawings:

X3E-17048-xxxx GEM Detector; Hadron Forward; General Arrangement
X3E-17048-xxxx GEM Detector; Hadron Forward; Absorber Subassembly

Reference Documents:

ASTM A450; Standard Specification for General Requirements for Carbon, Ferritic Ally , and Austenitic Alloy Steel Tubes.

1.0 Introduction

This specification to the austenitic stainless steel tubes to be used in the forward hadron calorimeter.

2.0 Description

2.1 Tubing shall be manufactured from Type TP 304

2.2 The tube dimensions are specified in the reference drawings.

2.3 Stainless Steel tubing shall comply with all the requirements of the current edition of ASTM A 450 for Cold Drawn, Seamless Tubing.

2.4 Tubes shall be straightened to +/- 1 mm/1000 mm.

3.0 Quality Control

3.1 Quality control requirements will be included in the final collaborative agreement. The requirements will be determined to reflect the manufacturing and assembly processes expected to be used. At this time the following specific quality control requirements are proposed for inclusion in the final agreement:

3.1.1 Dimensional Inspection
3.1.2

3.2 A mutually acceptable inspection procedure will be determined as part of the final collaborative agreement. The inspection procedure will provide for both regular progress reports and periodic on-site reviews.

3.3 The final acceptance of the tubes will be made at the site of manufacture by representatives of the SSCL.

4.0 Shipping Requirements

Packaging and shipping shall be accomplished in a manner which insures the arrival of tubes in specified condition. The arrival condition of the tubes shall be the responsibility of the manufacturer.

January 28, 1992

Material Specification No. SCT-017

GEM Detector
Calorimeter
Hadronic Forward Detector
Seals, Liquid Scintillator

Reference Documents:

1.0 Introduction

2.0 Description

3.0 Quality Control

3.1 Quality control requirements will be included in the final collaborative agreement. The requirements will be determined to reflect the manufacturing and assembly processes expected to be used. At this time the following specific quality control requirements are proposed for inclusion in the final agreement:

3.1.1
3.1.2
3.1.3
3.1.4
3.1.5

3.2 A mutually acceptable inspection procedure will be determined as part of the final collaborative agreement. The inspection procedure will provide for both regular progress reports and periodic on-site reviews.

3.3 The final acceptance of the liquid seals will be made at the site of manufacture.

4.0 Shipping Requirements

Packaging and shipping shall be accomplished in a manner which insures the arrival of liquid seals in specified condition. The arrival condition of the liquid seals shall be the responsibility of the manufacturer.

January 28, 1992

Material Specification No. SCT-018

GEM Detector
Calorimeter
Hadronic Forward Detector
Window: Quartz

Reference Documents:

1.0 Introduction

2.0 Description

3.0 Quality Control

3.1 Quality control requirements will be included in the final collaborative agreement. The requirements will be determined to reflect the manufacturing and assembly processes expected to be used. At this time the following specific quality control requirements are proposed for inclusion in the final agreement:

3.1.1
3.1.2
3.1.3
3.1.4
3.1.5

3.2 A mutually acceptable inspection procedure will be determined as part of the final collaborative agreement. The inspection procedure will provide for both regular progress reports and periodic on-site reviews.

3.3 The final acceptance of the quartz windows will be made at the site of manufacture.

4.0 Shipping Requirements

Packaging and shipping shall be accomplished in a manner which insures the arrival of quartz windows in specified condition. The arrival condition of the windows shall be the responsibility of the manufacturer.

February 18, 1993

Material Specification No. SCT-019

GEM Detector
Forward Hadron Calorimeter
Tapered Transmission Fibers

NOTE; THE NUMBERS IN THIS SPECIFICATION ARE INCORRECT AND NEED TO BE REVISED.

Reference Drawings:

X3E-17048-A818; GEM Detector, Forward Hadron Calorimeter, Readout Configuration.

1.0 Introduction

This specification covers the requirements for tapered plastic transmission fibers for the GEM detector forward hadron calorimeter.

2.0 Fiber Description

The tapered transmission fibers will transmit light from the scintillating liquid in the hadron forward calorimeter quartz sealing windows to the readout assemblies. The fibers will be optically clear, ultra violet transmitting and will be clad to provide maximum reflectivity.

2.1 Physical properties

2.1.1	Core Material:	Polystyrene,
2.1.2	Cladding Material:	.....,
2.1.3	Cladding Thickness:	10-15 microns,
2.1.4	Attenuation:	< 0.55 dB/m at 220 nm
2.1.5	Numeric Aperture:	0.22 ± 0.02,
2.1.6	Core refraction index:	1.529 at 220 nm,
2.1.7	Cladding refraction index:	1.514 at 220 nm.

2.1.8 Radiation hardness - In the radiation field up to 10 GRad/year and neutron flux of up to 10^16 n/cm^2/year for the duration of 10 years attenuation should degrade to no more than 2 dB/M and numeric aperture should remain stable within $\pm$ 10%

2.2 Dimensions:

2.2.1	Fiber Shape:	Cylindrical
2.2.2	Front Core diameter:	0.3 mm
2.2.3	Back core diameter:	2.0 mm
2.2.4	Cladding thickness:	0.33 mm
2.2.5	Buffer thickness :	0.36 mm
2.2.6	Single fiber lengths:	0.35-0.5 meters (see drawings).

2.3 Surface Finish:

2.3.1 Ends of fibers shall be polished.

2.3.2 Fiber ends shall be perpendicular to the axis of the fiber ±5°

3.0 Quality Control

3.1 Quality control requirements will be documented by the Superconducting Super Collider Laboratory (SSCL) as part of the procurement package. Specific requirements will include:

3.1.1 Optical transmission testing of each fiber,
3.1.2 Core/cladding refraction indices and numeric aperture testing of each fiber batch,
3.1.3 Surface quality testing of each fiber batch.

3.2 The final acceptance of the scintillator tiles will be made by representatives of the SSCL at the site of manufacture.

3.3 A system of material tracking will be established prior to the start of production. Tracking will include the identification of the base material in each fiber and the designated position in the detector of each fiber. An identification method which does not interfere with the performance of the fibers should be used.

4.0 Shipping Requirements

Packaging and shipping shall be accomplished in a manner which insures the arrival of fibers in specified condition. The arrival condition of the fibers shall be the responsibility of the quartz fiber manufacturer.

February 18, 1993

Material Specification No. SCT-023

GEM Detector
Forward Hadron Calorimeter
Light Mixers

Reference Drawings:

X3E-17048-xxxx; GEM Detector, Forward Hadron Calorimeter, Readout Configuration.

Reference Documents:

1.0 Introduction

This specification covers the requirements for quartz light mixers for the GEM forward hadron calorimeters. The mixers shall be manufactured to final form for installation into the forward calorimeters.

2.0 Light Mixer Description

The light mixers will transmit light from the transmission fibers of the forward hadron calorimeters to the photomultiplier assemblies. The light mixers will be optically clear and will be polished to provide maximum reflectivity.

2.1 Physical properties

2.1.1 Core Material: Pure Fused Silica Quartz or equivalent
2.1.2 Attenuation: < 0.50 dB/m at 220 nm (in accordance with attached specification),
2.1.3 Core refraction index: 1.529 at 220 nm

2.1.8 Radiation hardness - In the radiation field up to 10 Grad/year and neutron flux of up to 10^16 n/cm^2/year for the duration of 10 years attenuation should degrade to no more than 2 dB/m and must remain colorless.

2.2 Dimensions:

Dimensions and tolerances are provided in reference drawings.

2.3 Surface Finish:

All surfaces of the light mixers shall be polished. The finished surfaces shall be free of pockets, wrinkles or other distortions. Light mixers will be wrapped in reflective paper to protect surfaces.

3.0 Quality Control

3.1 Quality control requirements will be included in the final collaborative agreement. The requirements will be determined to reflect the manufacturing and assembly processes expected to be used. At this time the following specific quality control requirements are proposed for inclusion in the final agreement:

3.1.1 Optical index of refraction of all light mixers,

3.2 A mutually acceptable inspection procedure will be determined as part of the final collaborative agreement.

3.3 The final acceptance of the light mixers will be made at the site of manufacture by representitives of the SSCL.

3.4 A system of material tracking will be established prior to the start of production. Tracking will include the identification of the base material in each light mixer and the designated position in the detector of each light mixer. An identification method which does not interfere with the performance of the light mixers should be used.

4.0 Shipping Requirements

Packaging and shipping shall be accomplished in a manner which insures the arrival of light mixers in specified condition. The arrival condition of the light mixers shall be the responsibility of the manufacturer.

5. Assembly Procedures

Preliminary process specifictions have been prepared for all significant assembly and installation operations to be used for the scintillating calorimeter system. The final versions of the process specifications will be prepared in cooperation with the collaborating institutes involved in the fabrication, assembly and installation of the detectors. It is assumed that changes will also be made in the detail design of the calorimeters to facilitate and improve the assembly processes.

It should be noted that the facilities and schedule of activities at the SSCL will be under the supervision and control of the SSCL. Consequently, the scintillating calorimeter collaboration may be requested to make changes to accommodate the overall GEM schedule and design. Further, the specifications and drawings will be filed at the SSCL and controlled under the document control system established at the SSCL.

Rough Draft process specifications attached include:

GDT-00000; Assembly of Scintillating Tile Layers
GDT-00000; Assembly of Scintillating Barrel Modules
GDT-00000; Final Assembly of Scintillating Barrel at SSCL
GDT-00000; Assembly of Passive End Caps at SSCL
GDT-00000; Assembly of Hadronic Forward Calorimeter
GDT-00000; Installation of Scintillating Barrel
GDT-00000; Installation of Passive End Caps and Forward Hadron Calorimeters

Preliminary labor analyses are attached to some of the process specifications. These analyses are appended to provide an initial working basis for the labor estimates to be used in the actual manufacturing planning documents. Time allocations, personnel loading and analysis methods may all be changed by the collaborating institutes performing the tasks.

Summary Description of Subsystem Components

A. Scintillating Barrel:

The scintillating barrel is composed of four primary subsystems;

1. Support tube; A stainless steel tube will provide the structural support for the scintillating barrel calorimeter. The absorber/tile modules will be bolted to the inner surface of the tube. The tube will be fabricated in a single assembly which will include four flanges for joining the the completed calorimeter to the Central Detector Support (CDS). It is assumed that the tube will be fabricated using conventional vessel construction techniques and that the final fabrication will occur at the SSCL since the complete barrel is too large to be shipped within the USA.

2. Absorber stacks; Forty-four stacks of copper or brass plate with gaps for four layers of scintillating tiles will be preassembled to form the basic modular structure. The current concept specifies eight plates per stack in a 1+2+2+2+1 combination. The stacks will be bolted and banded for stability and the tile layer spaces will be maintained by square bars.

3. Tile layers; Plastic tiles are grouped in single layers on a stainless steel trays. The tiles are fitted with embedded fibers for connection to the readout assemblies. The layers are wrapped with aluminized mylar to contain the scintillated light. There are eight groups of six tiles, each with 2 readout fibers. The assembly procedure for the tile layers is provided by STC-A-002, Tile Layer Assembly.

4. Readout assemblies; Groups of eight photomultiplier tubes (PMT's) with attached electronics and cabling. The PMT's convert the light transmitted by the fibers to electrons which are processed by the GEM electronics system. Two readout assemblies are attached to the end of each module. The readout assemblies will also include the calibration and monitoring system connections to the modules.

The assembly of the absorber stacks, tile layers and readout assemblies into complete modules is described in STC-A-001, Assembly of Scintillating Barrel Modules. Fit-up of the completed modules with the structural support tube is described in STC-A-004, Final Assembly of Scintillating Barrel at SSCL.

B. Passive End Caps

There are two passive end caps each having three basic components:

1. Absorber plates: Stacks of "pie shaped" copper or brass plates which are interconnected with bolted fasteners to form a large disc.

2. Central tube: A copper or brass tube on the inside of the absorber plates used to support the forward hadron calorimeter.

3. Support system: A combination of outriggers to the scintillating barrel rails and spokes which will be used to stabilize the end caps after placement in the GEM detector.

The assembly of the passive end caps is described in STC-A-005, Assembly of Passive End Caps at SSCL.

C. Forward Hadron Calorimeter

There are two forward hadron calorimeters each has three primary components:

1. External vessel: A stainless steel vessel with external piping for the containment and circulation of the liquid scintillator. The vessel will also provide structural support for the forward systems in the passive end caps.

2. Absorber stack; A combination of stainless steel liquid tubes between two drilled end plates; interleaved with shaped tungsten pellets. The end plates will be precisely drilled and the tubes will be swaged into placed.

3. Readout assemblies; Detachable assemblies of PMT's, readout fibers and electronics will be bolted to the absorber stacks. The readout assemblies are designed to be replaced during maintenance cycles due to the radiation damage to the components.

The assembly of the forward hadron calorimeter is described in STC-A-006, Assembly of Forward Hadron Calorimeter.

D. Installation

The external calorimeter system will be installed in the GEM detector in two phases. The scintillating barrel will be the first detector element installed and the passive end caps combined with the forward hadron calorimeters will be the last. The barrel installation procedure is described in STC-A-007, Installation of Scintillating Barrel. The end cap/forward installation is described in STC-A-008, Installation of Passive End Caps and Forward Hadron Calorimeters.

A central detector installation rail system is being designed by Los Alamos National Laboratory. The rail system design is being matched to the configuration of the internal rails of the scintillating barrel and the deflections of the CDS and barrel assembly.

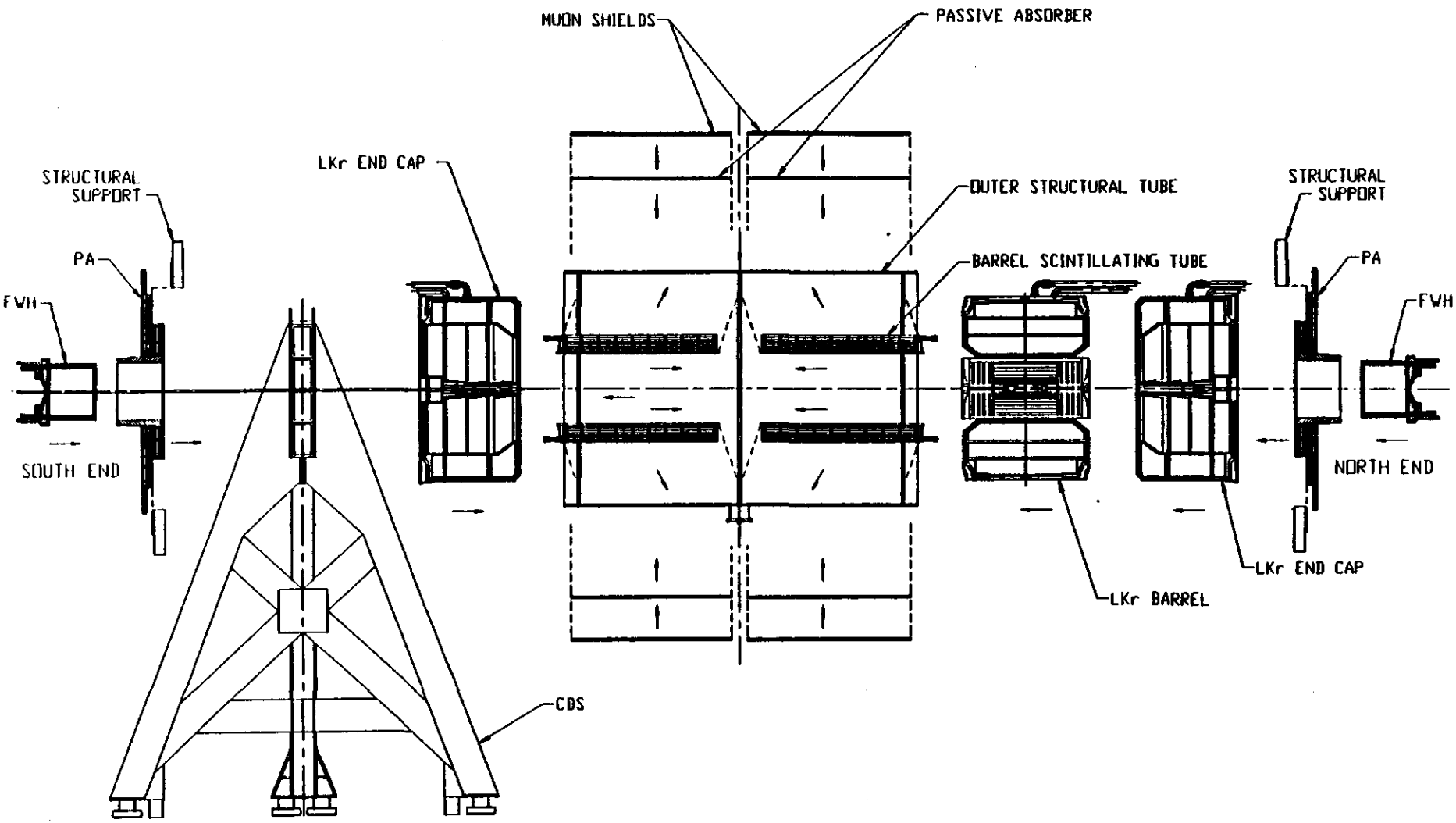

GEM DETECTOR
CALORIMETER
EXPLODED VIEW

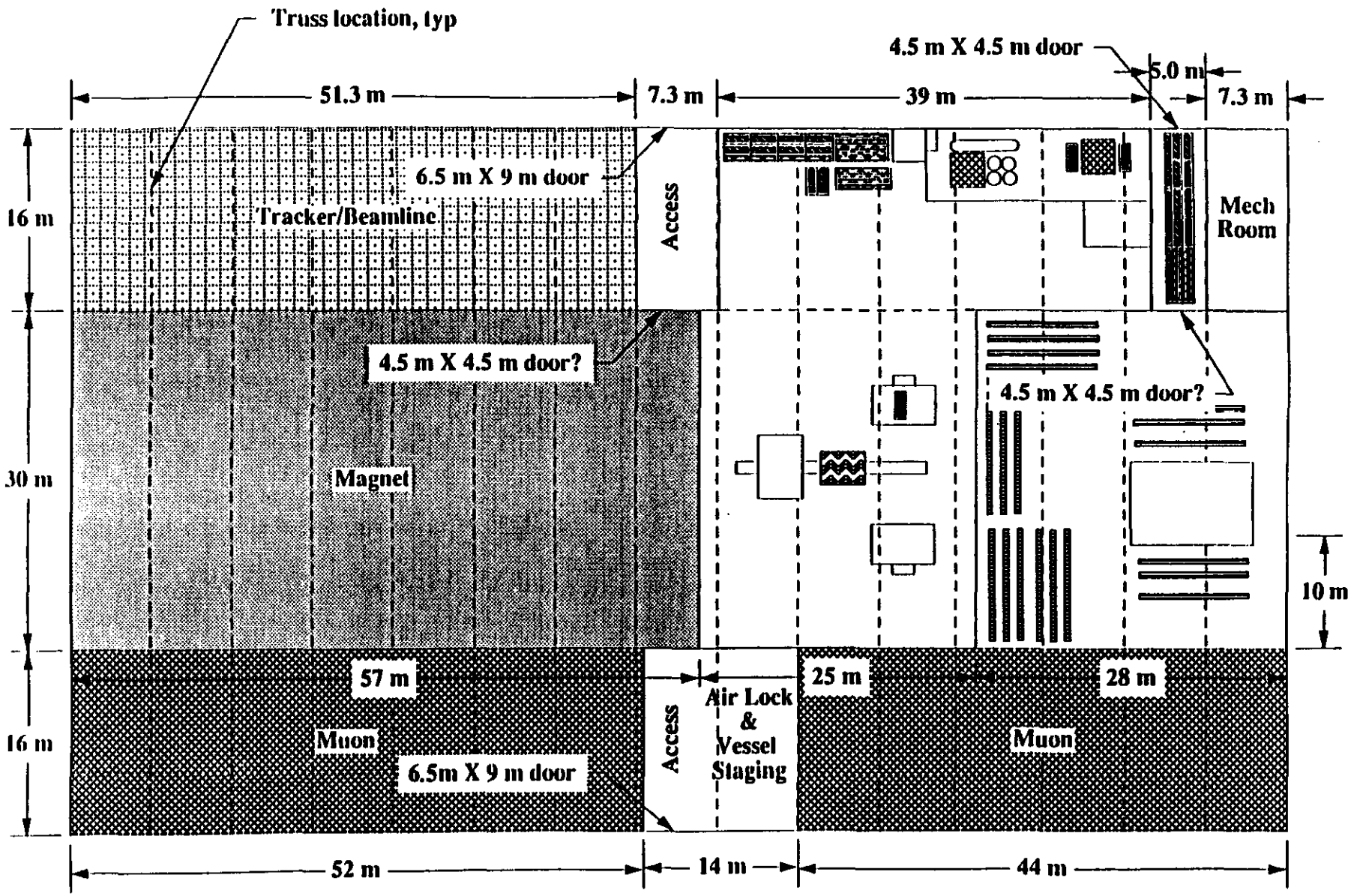

GEM North Assembly Bldg
North Lo-Bay EM Cal Space
Vertical Magnet Assembly

CE.GC.SF.921209.01

SPECIFICATION NO.:.....
ISSUE DATE:
REVISION:

Process Specification
For The
Scintillator Modules
For The
GEM Detector
Scintillating Barrel Calorimeter
At The
Superconducting Super Collider Laboratory
2550 Beckleymeade Avenue
Dallas, Texas 75237

APPROVED BY:

_____ _____

Mark Rennich, Technical Specialist — Date
Oak Ridge National Laboratory

SPECIFICATION NO.:

PREPARED BY:

Mark Rennich, Technical Specialist
Oak Ridge National Laboratory

Date

REVIEWED BY:

NAME, TITLE, ORG.
REQUESTER

Date

REVIEWED BY:

NAME, TITLE, ORG.
SUPERVISON

Date

REVIEWED BY:

Mike Harris, GEM Lead Engineer
SSCL Laboratory

Date

REVIEWED BY:

NAME, TITLE, ORG.
SSCL Quality Assurance

Date

REVIEWED BY:

NAME, TITLE, ORG.
ES&H Overisght; SSCL

Date

Table of Contents

Section 1.0 - SCOPE.....1.....
Section 2.0 - APPLICABLE DOCUMENTS.....1.....
Section 3.0 - REQUIREMENTS.....2.....
Section 4.0 - QUALITY ASSURANCE PROVISIONS.....5....
Section 5.0 - PREPARATION FOR DELIVERY.....5.....
Section 6.0 - NOTES.....6.....

Section 1.0 - SCOPE

This procedure covers the requirements and processes for the final assembly of forty-four scintillating barrel modules. The details of the assembly process may be changed to suit the institute performing the assembly.

Modules of Scintillating Barrel Calorimeter are about 80 cm thick, 100 cm wide, and 500 cm long with weight about 24 T each . The modules will have 8 layers of absorber plate interleaved with four layers of readout tiles. The plates will be connected by a combination of bolting along the centerline and banding around the outside. Sixteen PMT readout assemblies will be mounted in 2 groups of 8 each on one end of each module. The completed, forty modules will be bolted to the outer structural support tube. The modules are designed to be self-supporting and independent of the liquid calorimeter support.

Section 2.0 - APPLICABLE DOCUMENTS

Paragraph 2.1 - Government Documents

The following documents of the exact issue shown form a part of this specification to the extent specified herein. In the event of conflict between the documents referenced herein and the contents of this specification, the contents of this specification shall take precedence.

Drawings:

X3E-17048-A825, GEM Detector, Scintillating Barrel, Module Subassembly
Labor Analyses of Scintillating Barrel module assembly

Copies of specifications, standards, drawings, and publication required by suppliers in connection with specified procurement functions may be obtained from the SSCL/URA Subcontract Administrator.

Section 2.2 - Non-Government Documents

This paragraph is not applicable to this specification.

Section 3.0 - REQUIREMENTS

Paragraph 3.1 - Equipment

TBD.....

3.1.1 Banding Machine.

3.1.2 Conventional metal cutting, grinding and drilling tools.

3.1.3 Absorber Module lifting fixture

3.1.4 Tile assembly lifting fixture

Paragraph 3.2 - Materials

The materials for the scintillating barrel assembly are described or referenced in the following companion specifications:

Absorber Plates, Material Specification No. .....
Tile Layer Assembly; Process Specification No. .....
Photomultiplier Readout Assembly, Process Specification No. .....

Paragraph 3.3 - Required Procedures and Operations

3.1 Assembly of the scintillating barrel modules will take place away from the IR-5 site at the SSCL in order to minimize facility requirements. The modules are of a size which can be transported via truck to the site for installation into the barrel.

3.2 A single prototype module will be assembled to verify shipping methods, quality procedures, and assembly techniques. The module will be used by the SSCL as a physics test device.

3.3 The detailed assembly procedures used to provide completed modules are to be determined by the Vendor The procedures will be evaluated by the SSCL on the basis of the resulting finished condition of the modules. The procedures for the assembly of the modules provided in Section 3.4 are suggested as an initial starting point for planning the assembly operations.

Paragraph 3.4 - Recommended Procedures and Operations

The modules will be assembled from three subasssemblies produced in separate processes at the same location as the assembly process or at remote sites. These assemblies are the absorber stack (see Specification STC-001), readout groups and tile layers (see Specification STC-A-002).

a. The assemlby process will require an area sufficient to array several modules with adaquate space on both sides for installation of the tile layers.

b. A crane capable of lifting 30 metric tons will be required to handle the modules. The crane must be able to reach the entire assemlby area.

c. Final assemlby will begin with a dimensional inspeciton of the absorber module. When the module has been accepted the temporary bands on one side will be removed (if present) and the outside spaces removed to provide side access to the four tile layers on one side of the module. Clamping may be used on the opposite side of the module to maintain spearation between the absorber plates.

d. Following an inspection of the four tile/fiber assemblies each will be installed in the absorber stack. The edge spacers will then be positioned.

f. The above process will then be repeated for the other side of the module.

g. Following the installation of the tile layers clamps will be removed; the centerline fasteners will be retightened if necessary and the bands installed.

h. The side plates will be installed after a dimensional inspection of the assemlby confirms proper alignment of the layers.

i. With the completion of the stacking operations the end plate and the two fiber alignment fixtures will be installed . As part of this operation the fibers will be grouped according to channel.

j. The grouped fibers will be clamped and the ends will be finished.

k. Quality Control verification will be provided by connection of readout PMT's and electronics. Measurements of cosmic rays will be made on the assembly to determine the functionality of all layers of tile. If the assembly fails to perform properly it will be disassembled and repaired.

l. Following acceptance of the assembly the readout PMT's and electronics will be removed and the exposed transmission fibers will be covered with a protective cap.

m. Modules will be shipped to the SSCL for final assembly in the support structure following an acceptance inspection by representatives of the SSCL.

Paragraph 3.5 - Certification

Certification of operations and procedures used in the assembly of the modules will be based on the performance tests of the modules described in Section 4.0.

Section 4.0 - QUALITY ASSURANCE PROVISIONS

Paragraph 4.1 - Responsibilities for Inspection

All testing shall be performed by the vendor in accordance with the requirements of this specification.

Paragraph 4.2 - Monitoring Procedures for Equipment Used in Process

This paragraph is not applicable to this specification

Paragraph 4.3 - Monitoring Procedures for Materials

Proper storage and handling of materials used in the modules will be the responsibility of the Vendor. The tile layer assemblies shall be stored in a controlled atmosphere having a temperature range between 55° and 80° F , and a relative humidity of less than 50%.

Paragraph 4.4 - Certification

TBD

Paragraph 4.5 - Test Methods

Test procedures and methods shall be proposed by the Vendor in the form of written documents. The procedures shall be approved by the Company prior to use.

Paragraph 4.6 - Quality Assurance Records

The Vendor shall provide a procedure for the maintenance and distribution of quality assurance records prior to the beginning of the assembly operations. The procedure shall be reviewed and approved by the Company.

Section 5.0 - PREPARATION FOR DELIVERY

The modules shall be adequately packaged for shipment to insure arrival in specified condition. The arrival condition of the plates shall be the responsibility of the absorber plate manufacturer.

Section 6.0 - NOTES

Paragraph 6.1 - Intended Use

The modules will be installed in the GEM particle physics detector where they will absorb and measure particles produced by collisions in the SSCL collider system. In the scintillator barrel the plates will absorb the particles while the four layers of scintllator plastic will produce light used to measure the energy of the particles. Photomultiplier tubes measure the light output from the tiles via optic fibers and produce electroinc sighnals which are analyzed to characterize the particles.

Paragraph 6.2 - Definitions

This paragraph is not applicable to this specification

GEM Detector
Scintillating Hadron Calorimeter-OD Tube
Labor Analysis
Barrel Module Assembly

	Mach. Hours Hours		Person-Hrs Hours
	1.17		2.15

20. 3. 3. 1. 1. 0. 0. Module Assembly	Mach. Hours Hours	Persons Each	Person-Hrs Hours
1. 0. Set-up Absorber Stack			
1. Receive Absorber Stack	1.00	3	3
2. Remove Shipping Fixture	1.00	2	2
3. Install Temporary Bracing	4.00	2	8
4. Remove Side Spacers	0.66	2	1.32
5. Inspect Gaps	1.00	1	1
6. Labor/Module	7.66		15.32
7. Total Number of modules	40		
8. Total Touch Time	306		612.8
9. Efficiency Factor	50%		50%
10. Total Hours	460		919
11. Person-Years	0.26		0.52
2. 0. Install Tile Layers			
1. Receive Eight Tile Layers	1.00	2	2
2. Insert Eight Tile Layers	2.00	2	4
3. Group Fiber Ends	1.00	2	2
4. Install Side Spacers	1.00	2	2
6. Labor/Module	5.00		10.00
7. Total Number of modules	40		
8. Total Touch Time	200		400
9. Efficiency Factor	50%		50%
10. Total Hours	300		600
11. Person-Years	0.17		0.34
3. 0. Complete Assemlby			
1. Tighten Fasteners	1.00	2	2
2. Install 7 Bands	2.00	2	4
3. Install Side Plates	4.00	2	8
4. Install End Plate	1.50	2	3
5. Clamp Fiber Ends	1.00	2	2
6. Finish Fiber Ends	4.00	2	8
7. Inspect Assembly	1.00	2	2
8. Labor/Module	14.50		29.00
9. Total Number of modules	40		
10. Total Touch Time	580		1160
11. Efficiency Factor	50%		50%
12. Total Hours	870		1,740
13. Person-Years	0.49		0.98

4.	0. Install Readout			
	1. Install Readout Align. Flange	1.00	1	1
	2. Install Readout Assembly	0.75	1	0.75
	3. Test/Inspect Setup	4.00	1	4
	4. Remove Readout Assembly	0.50	1	0.5
	5. Store Module	1.00	3	3
	6. Labor/Module	7.25		9.25
	7. Total Number of modules	40		
	8. Total Touch Time	290		370
	9. Efficiency Factor	50%		50%
	10. Total Hours	435		555
	11. Person-Years	0.25		0.31

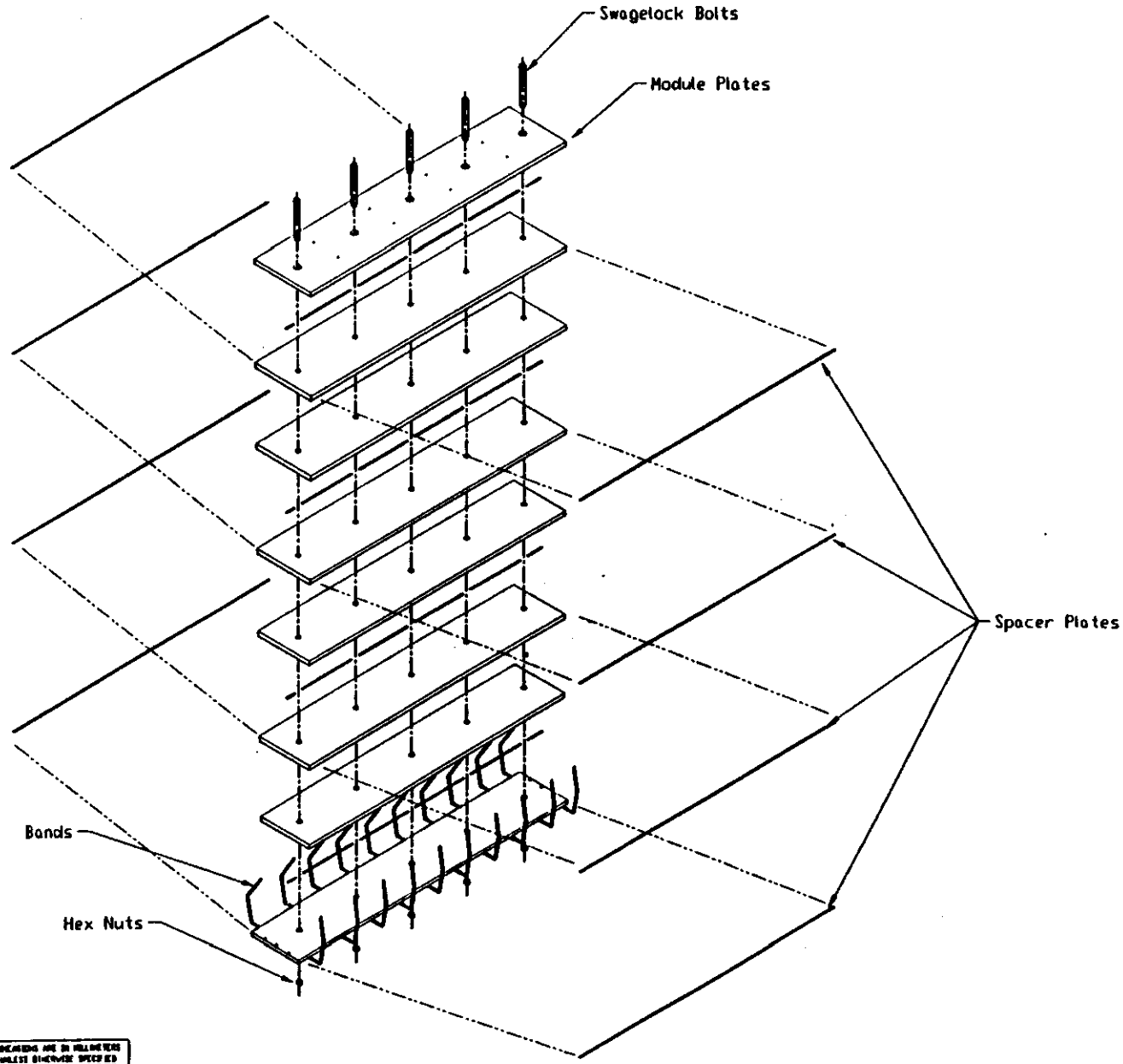

GEM DETECTOR
BARREL SCINTILLATING CALORIMETER
ABSORBER STACK EXPLODED VIEW

X3E017040 A060

DO NOT SCALE DRAWING

DO NOT REVERSE MANUALLY

SPECIFICATION NO.:.....
ISSUE DATE:
REVISION:

Process Specification
For The
Scintillator Tile Layers
For The
GEM Detector
Scintillating Barrel Calorimeter
At The
Superconducting Super Collider Laboratory
2550 Beckleymeade Avenue
Dallas, Texas 75237

APPROVED BY:

_____ _____

Mark Rennich, Technical Specialist — Date
Oak Ridge National Laboratory

SPECIFICATION NO.:

PREPARED BY:

Mark Rennich, Technical Specialist
Oak Ridge National Laboratory

Date

REVIEWED BY:

NAME, TITLE, ORG.
REQUESTER

Date

REVIEWED BY:

NAME, TITLE, ORG.
SUPERVISON

Date

REVIEWED BY:

Mike Harris, GEM Lead Engineer
SSCL Laboratory

Date

REVIEWED BY:

NAME, TITLE, ORG.
SSCL Quality Assurance

Date

REVIEWED BY:

NAME, TITLE, ORG.
ES&H Overisght; SSCL

Date

Table of Contents

Section 1.0 - SCOPE.....1.....
Section 2.0 - APPLICABLE DOCUMENTS.....1.....
Section 3.0 - REQUIREMENTS.....2.....
Section 4.0 - QUALITY ASSURANCE PROVISIONS.....5....
Section 5.0 - PREPARATION FOR DELIVERY.....5.....
Section 6.0 - NOTES.....7.....

Section 1.0 - SCOPE

This procedure covers the requirements and processes for the assembly of the scintillating barrel tiles layers. This procedure is intended to correspond with the overall GEM installation plan however, many of the details of the assembly process may be changed to suit the institute performing the assembly.

The goal of the assembly process is to achieve a high level of mechanical and optical uniformity in the joints between the readout components in the assembly.

Section 2.0 - APPLICABLE DOCUMENTS

Paragraph 2.1 - Government Documents

The following documents of the exact issue shown form a part of this specification to the extent specified herein. In the event of conflict between the documents referenced herein and the contents of this specification, the contents of this specification shall take precedence.

Drawings:

X3E-17048-A830, GEM Detector, Scintillating Barrel, Scintillator Tile,
X3E-17048-A818, GEM Detector, Scintillating Barrel, Tile/Fiber Assembly,
Material Specification; Scintillating Barrel; Scintillating Tiles, SCT-003,
Material Specification; Scintillating Barrel; Wave Length Shifting Fiber, SCT-006,
Material Specification; Scintillating Barrel; Transmission Fiber SCT-004,
Assembly Procedure; Scintillating Barrel; Module Fabrication and Ass. SCT-A-001,

Copies of specifications, standards, drawings, and publication required by suppliers in connection with specified procurement functions may be obtained from the SSCL/URA Subcontract Administrator.

Section 2.2 - Non-Government Documents

This paragraph is not applicable to this specification.

Section 3.0 - REQUIREMENTS

Paragraph 3.1 - Equipment

3.1.1 The tile layer assembly process will not require a substantial amount of equipment; however, it will require a large amount of space. The layers are very large (approximately 1 m X 5 m) thus the handling trays and lay-down areas will have to be very large to permit personnel access to all sides.

3.1.2 Specific machines will include:

3.1.2.1 Tile Layer handling trays: lightweight assemblies which will enable personnel to pick-up and handle the assemblies without distortion.

3.1.2.2 Fiber Bonding machine: a device provided by the SSCL for connecting the WLS fiber and transmission fibers.

Paragraph 3.2 - Materials

The materials for the scintillating barrel assembly are described or referenced in the following companion specifications:

Wave Lenght Shifting Fiber, Material Specification No. .....
Transmission Fiber, Material Specification No. .....
Scintillating Tile, Material Specification No. .....

Paragraph 3.3 - Required Procedures and Operations

3.1 Assembly of the tile layers will take place away from the IR-5 site at the SSCL in order to minimize facility requirements. The layers are of a size which can be transported via truck to the site for installation into the barrel.

3.2 A single prototype module will be assembled to verify shipping methods, quality procedures, and assembly techniques. The module will be used by the SSCL as a physics test device. The tile layers used in the module will be assemlbed in accordance with the version of this document in effect at the time.

3.3 The detailed assembly procedures used to provide completed tile layers are to be determined by the Vendor The procedures will be evaluated by the SSCL on

the basis of the resulting finished condition of the layers. The procedures for the assembly of the layers provided in Section 3.4 are suggested as an initial starting point for planning the assembly operations.

3.4 The atmospheric conditions of the layer assembly facilities shall be controlled according to the requirements of the reference material specifications.

Paragraph 3.4 - Recommended Procedures and Operations

a. The tile layers will consist of five primary elements; scintillating tiles, wave length shifting (WLS) fibers, transmission fibers, mylar film and stainless steel retainer trays.

b. The WLS and transmission fibers will be cut to length as part of the fiber manufacturing process. The fibers will be shipped in straight lengths to the layer assembly site. The WLS and transmission fibers will be joined with a thermal bonding machine provided by the SSCL prior to installation into the tile layer assembly. The quality of the bonding process will be determined via optical tests specified in Section 6 below.

c. Aluminized mylar film will be installed on the bottom of the stainless steel tray; reflective side up. Strips of film will also be bonded to all edges of the tiles.

d. Following installation of the film all eight tiles for a single layer will be installed in the tray. The fibers will then be positioned in the keyhole slots machined in the surface of each tile. A visual inspection will be made to determine that the fibers are positioned in the right orientation and location.

e. Clips will be applied to hold the fibers in the correct position. The loose transmission fiber ends will be contained in a temporary extension to the fiber tray for protection. A primary goal of the assembly process is to minimize the bending the fibers.

f. After a final visual inspection, the completed assembly will be covered in aluminized mylar; reflective surface down.

Paragraph 3.5 - Certification

Certification of operations and procedures used in the assembly of the modules will be based on the performance tests of the modules described in Section 4.0.

Section 4.0 - QUALITY ASSURANCE PROVISIONS

Paragraph 4.1 - Responsibilities for Inspection

All testing shall be performed by the vendor in accordance with the requirements of this specification.

Paragraph 4.2 - Monitoring Procedures for Equipment Used in Process

This paragraph is not applicable to this specification

Paragraph 4.3 - Monitoring Procedures for Materials

Proper storage and handling of materials used in the modules will be the responsibility of the Vendor. The tile layer assemblies shall be stored in a controlled atmosphere having a temperature range between 55° and 80° F, and a relative humidity of less than 50%.

Paragraph 4.4 - Certification

TBD

Paragraph 4.5 - Test Methods

4.5.1 Test procedures and methods shall be proposed by the Vendor in the form of written documents. The procedures shall be approved by the Company prior to use.

4.5.2 Operational testing with a radioactive source (Ru-106, Sr-90). Measurements will be taken with a calibrated PMT as the source is scanned over the surface of the tile layer. Output values should be ±5% of a predetermined standard.

Paragraph 4.6 - Quality Assurance Records

The Vendor shall provide a procedure for the maintenance and distribution of quality assurance records prior to the beginning of the assembly operations. The procedure shall be reviewed and approved by the Company.

Section 5.0 - PREPARATION FOR DELIVERY

The tile layers shall be adequately packaged for shipment to insure arrival in specified condition. The arrival condition of the layers shall be the responsibility of the absorber plate manufacturer.

Section 6.0 - NOTES

Paragraph 6.1 - Intended Use

The tile layers will be installed in the GEM particle physics detector where they will measure particles produced by collisions in the SSCL collider system. In the scintillator barrel the layers of scintllator plastic will produce light used to measure the energy of the particles. Photomultiplier tubes measure the light output from the tiles via optic fibers and produce electroinc sighnals which are analyzed to characterize the particles.

Paragraph 6.2 - Definitions

This paragraph is not applicable to this specification

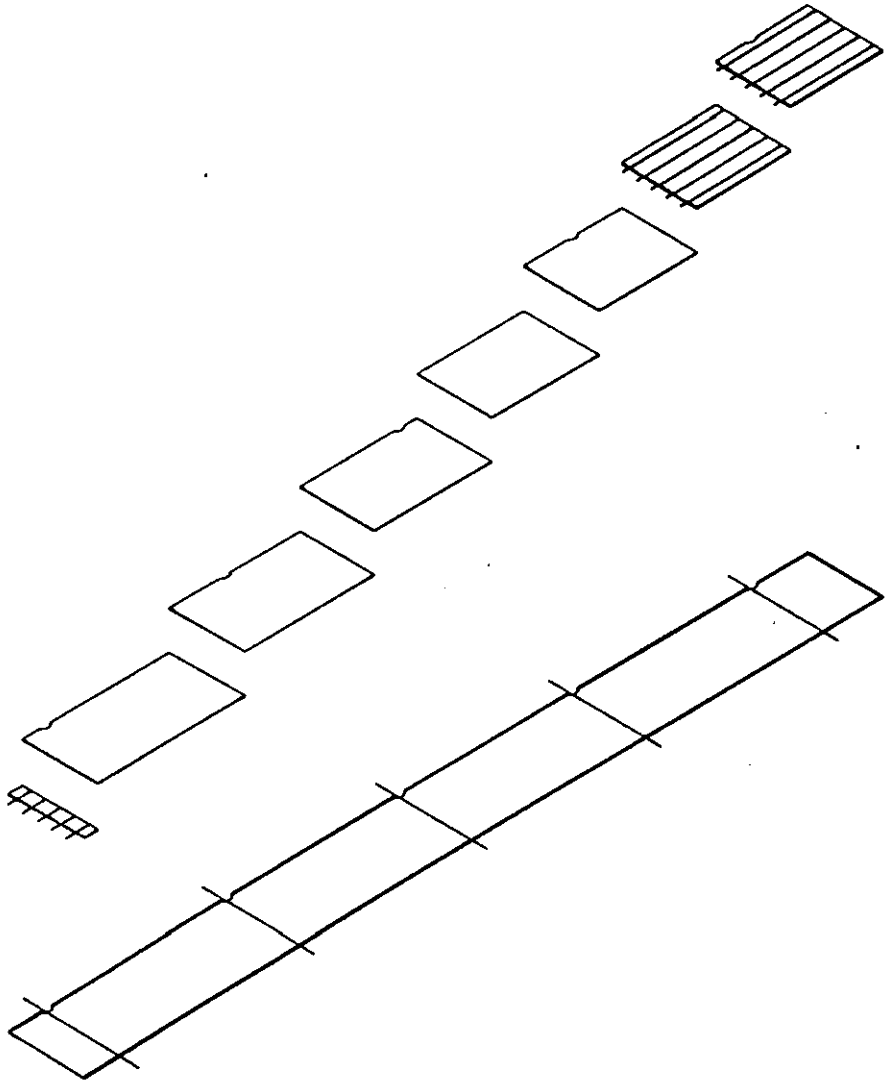

GEN DETECTOR
BARREL SCINTILLATING CALORIMETER
TILE LAYER EXPLODED VIEW

N/A

X3E017

A069

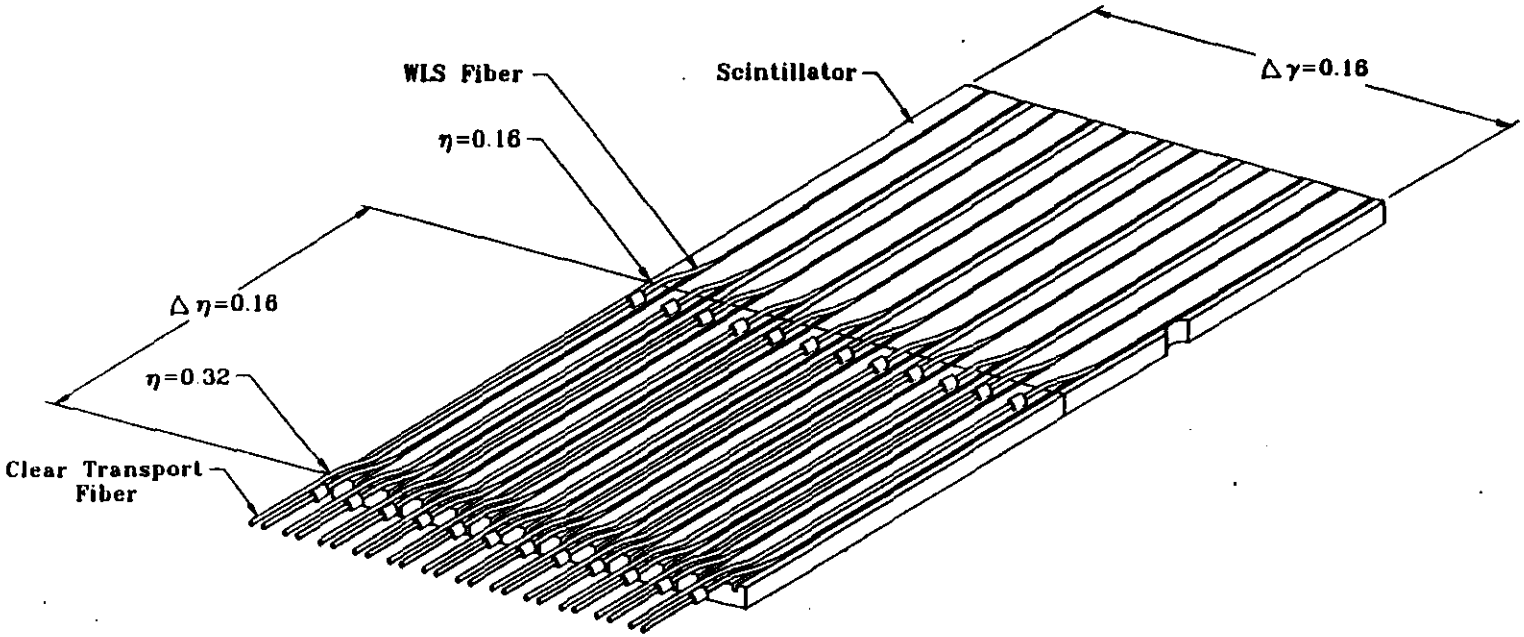

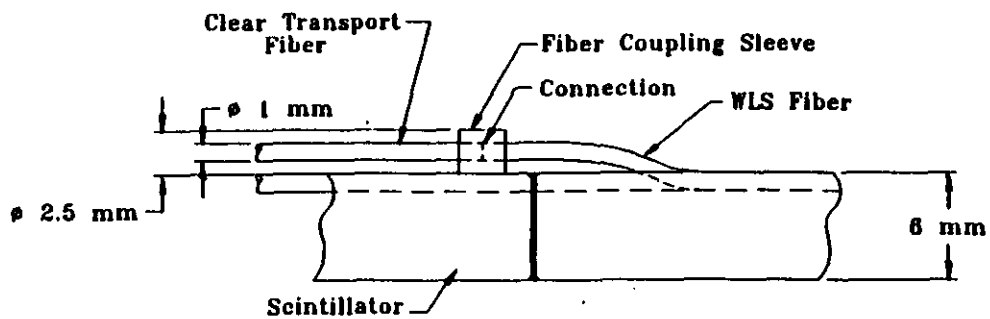

View A

GEM DETECTOR
BARREL SCINTILLATING CALORIMETER
TILE-FIBER ISOMETRIC DETAIL

GEM Detector
Scintillating Hadron Calorimeter-OD Tube
Labor Analysis
Tile Layer Assembly

	Mach. Hours Hours		Person-Hrs Hours
	5.61		6.08

20. 3. 3. 2. 2. 1. 0. 0. Tile Layer Assembly	Mach. Hours Hours	Persons Each	Person-Hrs Hours
1. 0. Set-up Fiber Bonding Oper.			
1. Receive/Sort WLS Fibers	40.00	2	80.00
2. Receive/Sort Transm. Fibers	40.00	2	80.00
3. Receive Bonding Sleeves	4.00	1	4.00
4. Startup/Test Bonding Machine	24.00	1	24.00
5. Perform Test Bonds	40.00	1	40.00
6. Total Touch Time	148		228.00
7. Efficiency Factor	50%		0.50
8. Total Hours	222		342.00
9. Person-Years	0.13		0.19
2. 0. Fiber Bonding			
1. Install Sleeve &Fibers	0.017	1	0.02
2. Bond Fibers	0.033	1	0.03
3. Test Fiber Assemlby	0.017	1	0.02
4. Store Fiber Assemlby	0.017	1	0.02
5. Single Fiber Bonding Time	0.083		0.08
6. Total Number of Fibers	30,720		
7. Total Touch Time	2,560		2,560.00
8. Efficiency Factor	33%		0.33
9. Total Hours	3,405		3,404.80
10. Person-Years	1.92		1.92
3. 0. Tray Preparation			
1. Receive Tray	0.25	2	0.50
2. Install Film on Bottom of Tray	1.00	2	2.00
3. Inspect Tray	0.50	2	1.00
4. Total Labor/Tray	1.75		3.50
5. Total Number of Trays	160		
6. Total Tray Prep. Time	280		560.00
7. Efficiency Factor	50%		0.50
8. Total Hours	420		840.00
9. Person-Years	0.24		0.47

4.	0. Tile Preparation			
	1. Receive Tile	0.017	1	0.02
	2. Tape Edge of Tile	0.067	1	0.07
	3. Inspect Tile	0.017	1	0.02
	4. Install Tile in Tray	0.017	1	0.02
	5. Total Labor/Tile	0.117		0.12
	6. Total Number of Tiles	15,360		
	7. Total Tile Prep. Time	1,792		1,792.00
	8. Efficiency Factor	50%		0.50
	9. Total Hours	2,688		2,688.00
	10. Person-Years	1.52		1.52
5.	0. Fiber Installation			
	1. Receive Fiber Group	0.25	1	0.25
	2. Install Fiber Group in Tile	0.15	1	0.15
	3. Clamp Fiber Group	0.15	1	0.15
	4. Lable Fiber Group	0.10	1	0.10
	5. Labor/Fiber Group	0.65		0.65
	6. Fiber Groups	2,560		
	7. Fiber Installation	1,664		1,664.00
	8. Efficiency Factor	50%		0.50
	9. Total Hours	2,496		2,496.00
	10. Person-Years	1.41		1.41
6. 6.	0. Complete Layer Assembly			
	1. Receive Tray Cover	0.25	2	0.50
	2. Install Tray Cover	0.50	2	1.00
	3. Fix Fiber Ends	0.50	2	1.00
	4. Inspect Assembly	0.66	1	0.66
	5. Lable Assemlby	1.00	1	1.00
	6. Labor/Layer	2.91		4.16
	7. Layers	160		
	8. Fiber Installation	466		665.60
	9. Efficiency Factor	50%		0.50
	10. Total Hours	698		998.40
	11. Person-Years	0.39		0.56

SPECIFICATION NO.:.....
ISSUE DATE:
REVISION:

Process Specification
For The
Final Assembly
Of The
GEM Detector
Scintillating Barrel Calorimeter
At The
Superconducting Super Collider Laboratory
2550 Beckleymeade Avenue
Dallas, Texas 75237

APPROVED BY:

Mark Rennich, Technical Specialist Oak Ridge National Laboratory	Date

Table of Contents

Section 1.0 - SCOPE.....1.....
Section 2.0 - APPLICABLE DOCUMENTS.....1.....
Section 3.0 - REQUIREMENTS.....2.....
Section 4.0 - QUALITY ASSURANCE PROVISIONS .....5....
Section 5.0 - PREPARATION FOR DELIVERY.....5.....
Section 6.0 - NOTES.....7.....

Section 1.0 - SCOPE

This procedure covers the requirements and processes for the assembly of one scintillating barrel at the SSCL. The barrel will arrive in modular units from manufacturing sites located away from the SSCL. The structural barrel will first be welded into a single unit, including flanged joints for connection to the Central Detector Support (CDS). Forty scintillating modules will then be installed in the tube. The readout systems will also be completed and the entire will be operationally tested.

Section 2.0 - APPLICABLE DOCUMENTS

Paragraph 2.1 - Government Documents

The following documents of the exact issue shown form a part of this specification to the extent specified herein. In the event of conflict between the documents referenced herein and the contents of this specification, the contents of this specification shall take precedence.

Drawings:

X3E-17048-A821, GEM Detector, Scintillating Barrel, Assembly Fixture
X3E-17048-Axxx, GEM Detector, Scintillating Barrel, Module Fixture
Material Specification; Scintillating Barrel; Fasteners; SCT-013
Labor Analysis of Scintillating Barrel Assembly

Copies of specifications, standards, drawings, and publication required by suppliers in connection with specified procurement functions may be obtained from the SSCL/URA Subcontract Administrator.

Section 2.2 - Non-Government Documents

This paragraph is not applicable to this specification.

Section 3.0 - REQUIREMENTS

Paragraph 3.1 - Equipment

Specific fixtures and machines required in the assembly process will include:

3.1.1 Barrel Assembly stand; Drawing No. X3E-17084-0000

3.1.2 One up-righting and crane handling fixture; Drawing No. X3E-17084-0000

3.1.3 One module handling fixture (reuse from module assembly operation); Drawing No. X3E-17084-0000

Paragraph 3.2 - Materials

The materials for the scintillating barrel assembly are described or referenced in the following companion specifications:

Scintillating Barrel Calorimeter Structure, Material Specification No. .....
Structural Fasteners, Material Specification No. .....

Paragraph 3.3 - Required Procedures and Operations

3.3.1 Final Assembly of the barrel will take place at the SSCL. It is currently assumed that the operation will be performed inside the North Assembly Building at IR-5 (the GEM Detector experimental area) of the SSCL. The building will have normal industrial atmospheric control.

3.3.2 The detailed procedures used to assemble the scintillating barrel are to be determined by the Vendor The procedures will be evaluated and approved by the SSCL . The procedures for the assembly of the barrel provided in Section 3.4 are suggested as an initial starting point for planning the assembly operations.

3.3.3 Special training for individuals involved in the installation process may be specified or provided by the SSCL.

3.3.4 Certain operations, such as SSCL crane operation, will be performed only by SSCL designated employees.

Paragraph 3.4 - Recommended Procedures and Operations

a. The structural barrel structural support tube will be test assembled before leaving the fabrication shops to confirm fit-up and dimensions. Reference dimensions will also be taken to insure that the scintillating modules will fit correctly.

b. The structural barrel sturctural support tube will be shipped in pieces and reassembled at the SSCL. It is assumed that the operation will be performed with the barrel axis in a vertical orientation. Further it is assumed that the operation will be via welded construction only. This operation may be performed outside.

c. The barrel structure will be moved to the final assembly site inside the North Assembly Building at IR-5 and the scintillating modules will be installed. Module installation will be performed with the barrel mounted on trunnion rolls. Either a small monorail or a mobile crane will be used to insert the modules into the barrel. Modules will be installed in the bottom of the barrel only while the support tube is rotated to maintain balance.

d. Clearance between the modules is required to permit provide for a small amount of sag in the barrel when it is loaded into the detector. The design of the scintillating system will provide for adjustment of the gaps between modules to provide this clearance.

e. Following the completion of the module installation 40 PMT/electronics group assemblies will be installed.

f. Quality control testing will be performed on each assembly to verify functionality. Modules may be removed to correct defects.

g. The readout PMT's and electronics will be removed and the fiber covers will be placed over the transmission fiber ends. Following placement in the experimental hall and installation of the liquid barrel junction boxes the readout assemblies will be reinstalled.

Paragraph 3.5 - Certification

All assembly and lifting fixtures will be subject to safety inspection and approval by the SSCL prior to use at the laboratory.

Section 4.0 - QUALITY ASSURANCE PROVISIONS

Paragraph 4.1 - Responsibilities for Inspection

Periodic inspections will be undertaken by the SSCL during the installation process. Inspections will evaluate the positional accuracy of the placement, compliance with safety requirements and adherence with the installation procedure.

Paragraph 4.2 - Monitoring Procedures for Equipment Used in Process

This paragraph is not applicable to this specification

Paragraph 4.3 - Monitoring Procedures for Materials

Proper storage and handling of materials used in the modules will be the responsibility of the Vendor. The tile layer assemblies shall be stored in a controlled atmosphere having a temperature range between 55° and 80° F , and a relative humidity of less than 50%.

Paragraph 4.4 - Certification

TBD

Paragraph 4.5 - Test Methods

Test procedures and methods for all lifting fixtures shall be submitted by the Vendor to the SSCL for approval.

Paragraph 4.6 - Quality Assurance Records

The Vendor shall provide a procedure for the maintenance and distribution of quality assurance records prior to the beginning of the assembly operations. The procedure shall be reviewed and approved by the Company.

Section 5.0 - PREPARATION FOR DELIVERY

This paragraph is not applicable to this specification

Section 6.0 - NOTES

Paragraph 6.1 - Intended Use

The scintillating barrel will be installed in the GEM particle physics detector where it will absorb and measure particles produced by collisions in the SSCL collider system. In the scintillator barrel the layers of scintllator plastic will produce light used to measure the energy of the particles. Photomultiplier tubes measure the light output from the tiles via optic fibers and produce electroinc sighnals which are analyzed to characterize the particles.

Paragraph 6.2 - Definitions

This paragraph is not applicable to this specification

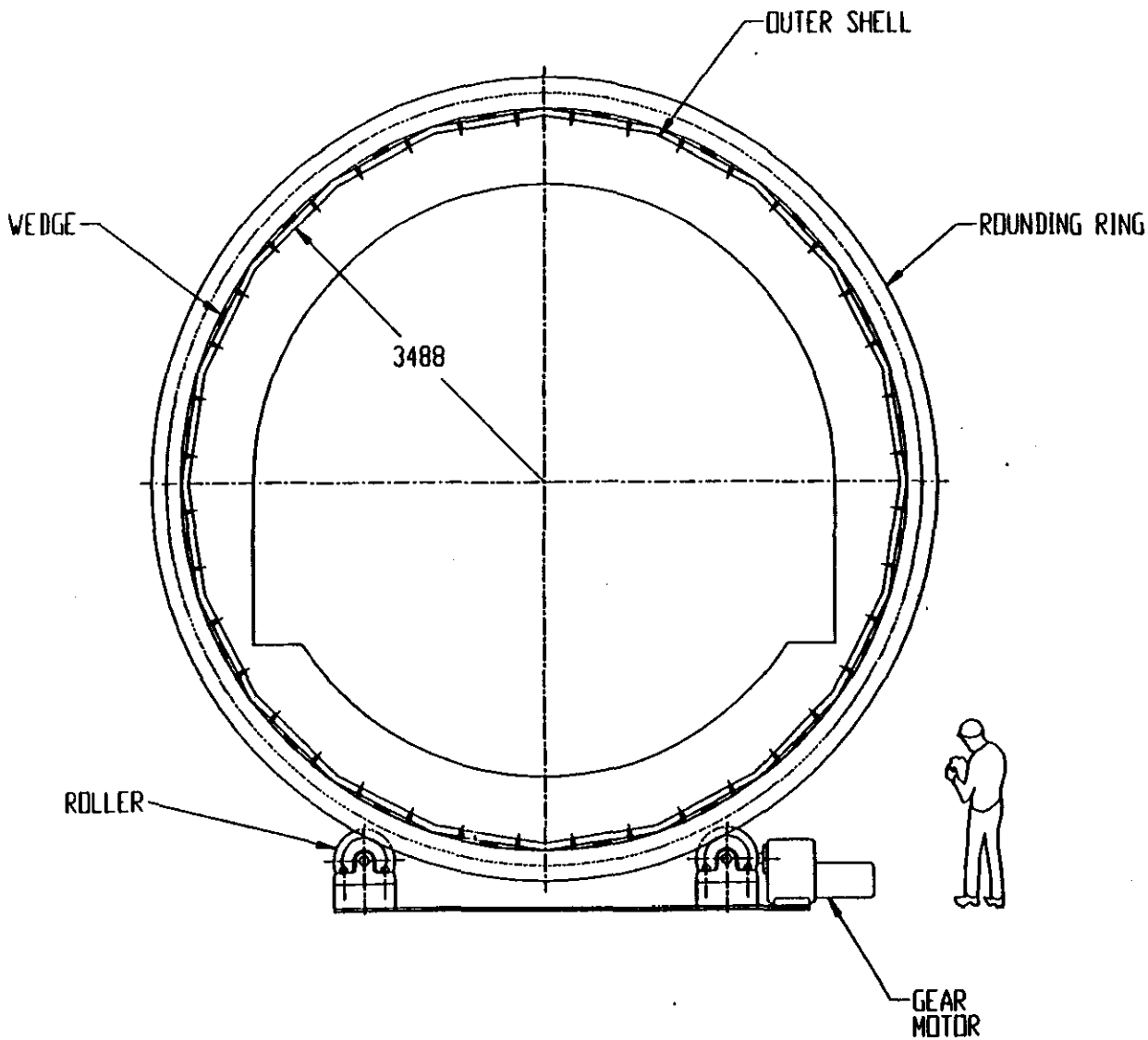

GEM DETECTOR
BARREL SCINTILLATING CALORIMETER
MODULE ASSEMBLY FIXTURE-END VIEW

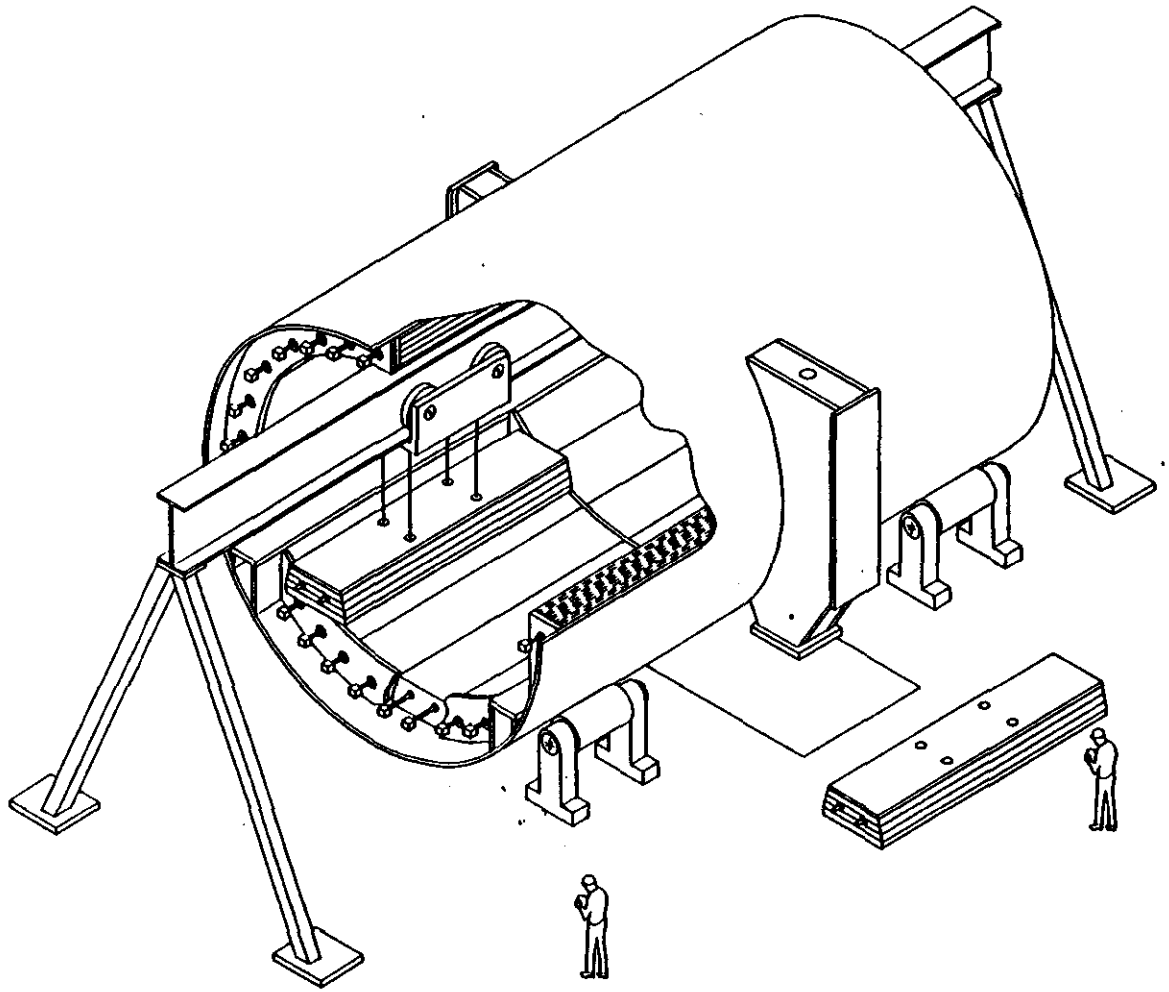

GEM DETECTOR
BARREL SCINTILLATING CALORIMETER
MODULE INSTALLATION

GEM Detector
Scintillating Hadron Calorimeter-OD Tube
Labor Analysis

		Machine Years		Person Years
20. 3. 1. 1. 0. 0. 0.	**Subsystem Assembly**	1.21		3.51
	Half Barrel Total	0.61		1.75

		Mach. Hours Hours	Persons Each	Person-Hrs Hours
20. 3. 1. 1. 1. 0. 0.	**Module Installation (Half Barrel)**			
1.	0. Setup Assembly Stand	80.00	8	640.00
2.	0. Position Half Barrel Structure	16.00	8	128.00
3.	0. Install Modules	8.00		18.00
	1. Receieve Module	1.00	3	3
	2. Position Module	1.00	3	3
	3. Install Fasteners	3.00	2	6
	4. Install Shimming	2.00	2	4
	5. Rotate Assemlby	1.00	2	2
4.	0. Half Barrel Assembly	8.00		18.00
	1. Number of Modules/Half Barrel	20		
	2. Total Module Touch Time	240		360
	3. Total Touch Time/Half Barrel	336		1,128
	4. Efficiency Factor	50%		50%
	5. Total Hours	504		1,692
	Person-Years	0.28		0.96

		Mach. Hours Hours	Persons Each	Person-Hrs Hours
20. 3. 1. 1. 2. 0. 0.	**Install Readout Assemblies (Half Barrel)**			
1.	0. Installation of Readout Assemblies	5.00		10.00
	1. Receive Assembly	1.00	2	2
	2. Install Alignment Fixture	2.50	2	5
	3. Install Assemlby	1.50	2	3
2.	0. Readout Assembly	5.00		10.00
	1. Readout Assemblies/Half Barrel	40		
	2. Total Touch Time/Half Barrel	200		400
	3. Efficiency Factor	50%		50%
	4. Total Hours	300		600
	Person-Years	0.17		0.34

20. 3. 1. 1. 3. 0. 0. Install Passive Absorber (Half Barrel)	Mach. Hours Hours	Persons Each	Person-Hrs Hours
1. 0. Installation of passive absorber	9.00		27.00
1. Receive Assembly	1.00	3	3
2. Install Assemlby	8.00	3	24
2. 0. Passive Absorber Assembly	9.00		27.00
1. Passive Plates/Half Barrel	20		
2. Total Touch Time/Half Barrel	180		540
3. Efficiency Factor	50%		50%
4. Total Hours	270		810
Person-Years	0.15		0.46

20. 3. 1. 1. 4. 0. 0. Install Noble Liq. Rails	Mach. Hours Hours	Persons Each	Person-Hrs Hours
1. 0. Installation of Rails	40.00		200.00
1. Receive Rails	16.00	5	80
2. Install Rails	24.00	5	120
2. 0. Passive Absorber Assembly	40.00		200.00
3. Efficiency Factor	50%		50%
4. Total Hours	60		300
Person-Years	0.03		0.17

SPECIFICATION NO.:.....
ISSUE DATE:
REVISION:

Process Specification
For The
Final Assembly
Of The
GEM Detector
Calorimeter Passive End Cap
At The
Superconducting Super Collider Laboratory
2550 Beckleymeade Avenue
Dallas, Texas 75237

APPROVED BY:

Mark Rennich, Technical Specialist Oak Ridge National Laboratory	Date

Table of Contents

Section 1.0 - SCOPE.....1.....
Section 2.0 - APPLICABLE DOCUMENTS.....1.....
Section 3.0 - REQUIREMENTS.....1.....
Section 4.0 - QUALITY ASSURANCE PROVISIONS.....2....
Section 5.0 - PREPARATION FOR DELIVERY.....3.....
Section 6.0 - NOTES.....3.....

Section 1.0 - SCOPE

This procedure covers the requirements and processes for the assembly of two Passive End Caps. Changes in the procedure will be made according to the capabilities and preferences of collaborating institutes involved in the fabrication and assembly of the end caps.

Section 2.0 - APPLICABLE DOCUMENTS

Paragraph 2.1 - Government Documents

The following documents of the exact issue shown form a part of this specification to the extent specified herein. In the event of conflict between the documents referenced herein and the contents of this specification, the contents of this specification shall take precedence.

Drawings:

X3E-17048-Axxx, GEM Detector, Passive End Cap, Assembly Fixture
Material Specification; Scintillating Calorimeter; Fasteners; SCT-013
Labor Analysis of Passive End Cap

Copies of specifications, standards, drawings, and publication required by suppliers in connection with specified procurement functions may be obtained from the SSCL/URA Subcontract Administrator.

Section 2.2 - Non-Government Documents

This paragraph is not applicable to this specification.

Section 3.0 - REQUIREMENTS

Paragraph 3.1 - Equipment

3.1.1 The assembly operation will require the use of either a mobile or bridge crane having a lifting capacity of at least 30 tons.

3.1.2 Specific fixtures required for the assembly process will include:

3.1.2.1 Two assembly stands per drawing No. X3E-17048-0000

3.1.2.2 One up-righting and crane handling fixture per drawing No. X3E-17048-000.

Paragraph 3.2 - Materials

No special materials are expected to be required for the assembly process.

Paragraph 3.3 - Required Procedures and Operations

3.3.1 Certain operations, such as crane operation, will be performed only by SSCL designated employees.

3.3.2 Special training for individuals involved in the assembly process may be specified and/or provided by the SSCL.

Paragraph 3.4 - Recommended Procedures and Operations

a. The passive end caps will be test assembled before leaving the fabrication shops to confirm fit-up and dimensions.

b. The end caps will be shipped in pieces and reassembled at the SSCL. It is assumed that the operation will be performed with the end caps in a vertical (flat) orientation. Further it is assumed that the operation will be via bolted construction only.

c. The passive end caps and hadronic forward systems will be joined together prior to installation in the experimental hall. This may also be performed with the center axis vertical with an up righting operation to follow.

Paragraph 3.5 - Certification

All assembly fixtures will be subject to safety inspection by the SSCL prior to use at the laboratory.

Section 4.0 - QUALITY ASSURANCE PROVISIONS

Paragraph 4.1 - Responsibilities for Inspection

Periodic inspections will be undertaken by the SSCL during the installation process. Inspections will evaluate the positional accuracy of the placement, compliance with safety requirements and adherence with the installation procedure.

Paragraph 4.2 - Monitoring Procedures for Equipment Used in Process

All lifting fixtures and lifting plans will be inspected and certified by the SSCL prior to usage.

Paragraph 4.3 - Monitoring Procedures for Materials

This paragraph is not applicable to this specification

Paragraph 4.4 - Certification

TBD

Paragraph 4.5 - Test Methods

Test procedures and methods for all lifting fixtures shall be submitted by the Vendor to the SSCL for approval.

Paragraph 4.6 - Quality Assurance Records

The Vendor shall provide a procedure for the maintenance and distribution of quality assurance records prior to the beginning of the assembly operations. The procedure shall be reviewed and approved by the Company.

Section 5.0 - PREPARATION FOR DELIVERY

This paragraph is not applicable to this specification

Section 6.0 - NOTES

Paragraph 6.1 - Intended Use

The passive end caps will be installed in the GEM particle physics detector where they will absorb particles produced by collisions in the SSCL collider

system. The reduction in the particle flux will improve the overall accuracy of the end cap muon chambers.

Paragraph 6.2 - Definitions

This paragraph is not applicable to this specification

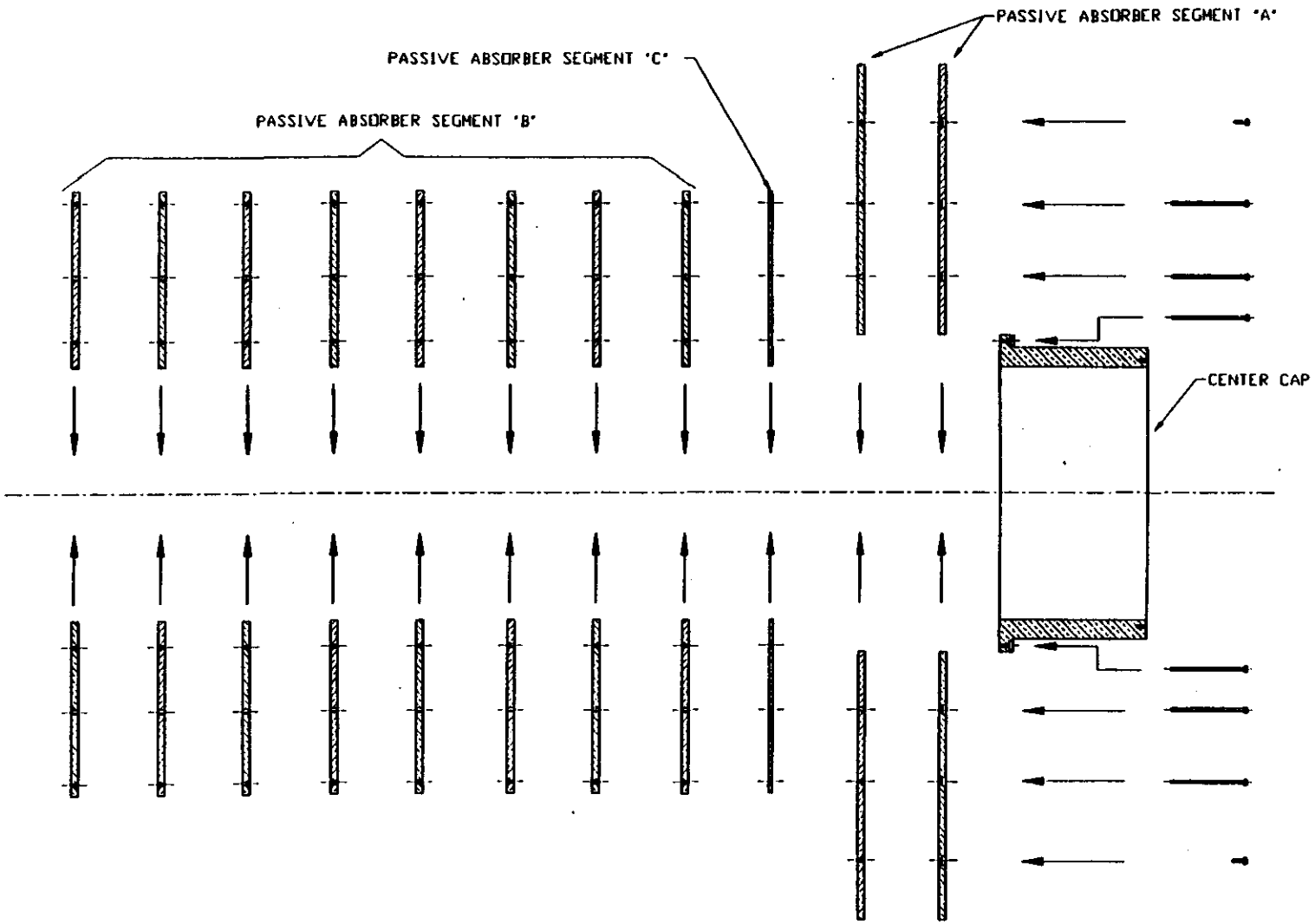

GEM DETECTOR
PASSIVE END CAPS
EXPLODED VIEW

GEM Detector
Passive Calorimeter End Cap
Labor Analysis
Passive End Cap Assembly

	Machine Years		Person Years
20. 6. 1. 1. 0. 0. Assemble North End Cap	0.51		2.05
	Mach. Hours Hours	Persons Each	Person-Hrs Hours
1. 1. 0. Setup Assembly Stand	16.00	4	64
1. 2. 0. Install Center Support	4.00	4	16
1. 3. 0. Plate Installation	2.83		11.32
1. Retrieve plate	1.00	4	4
2. Retrieve Center Tube	1.00	4	4
3. Install Plt in Ass. Fixture	0.50	4	2
4. Attach Plt to Assembly	0.33	4	1.32
1. 4. 0. Total/End	2.83		11.32
1. Plates/End	186		
2. Total Plate Touch Time	526		2,106
3. Total Touch Time/End	546		2,186
4. Efficiency Factor	66%		66%
5. Total Hours	907		3,628
6. Person-Years	0.51		2.05

	Machine Years		Person Years
20. 6. 1. 2. 0. 0. Assemble South End Cap	0.51		2.05
	Mach. Hours Hours	Persons Each	Person-Hrs Hours
2. 1. 0. Setup Assembly Stand	16.00	4	64
2. 2. 0. Install Center Support	4.00	4	16
2. 3. 0. Plate Installation	2.83		11.32
1. Retrieve plate	1.00	4	4
2. Retrieve Center Tube	1.00	4	4
3. Install Plt in Ass. Fixture	0.50	4	2
4. Attach Plt to Assembly	0.33	4	1.32
2. 4. 0. Total/End	2.83		11.32
1. Plates/End	186		
2. Total Plate Touch Time	526		2,106
3. Total Touch Time/End	546		2,186
4. Efficiency Factor	66%		66%
5. Total Hours	907		3,628
6. Person-Years	0.51		2.05

SPECIFICATION NO.:.....
ISSUE DATE:
REVISION:

Process Specification
For The
Assembly
Of The
GEM Detector
Forward Hadron Calorimeter
At The
Superconducting Super Collider Laboratory
2550 Beckleymeade Avenue
Dallas, Texas 75237

APPROVED BY:

Mark Rennich, Technical Specialist Oak Ridge National Laboratory	Date

Table of Contents

Section 1.0 - SCOPE.....1.....
Section 2.0 - APPLICABLE DOCUMENTS.....1.....
Section 3.0 - REQUIREMENTS.....2.....
Section 4.0 - QUALITY ASSURANCE PROVISIONS.....5....
Section 5.0 - PREPARATION FOR DELIVERY.....6.....
Section 6.0 - NOTES.....6.....

Section 1.0 - SCOPE

This procedure covers the requirements and processes for the assembly of two forward hadron calorimeters. The forward hadron calorimeters (FHC) include three major sections - scintillator section, readout section, and the liquid handling system. The scintillator sections and readout sections will be fabricated and assembled at off-site locations to minimize specialized fabrication equipment at the SSCL and will be shipped separately to the final assembly sight at the SSCL. All work required for installation of the liquid handling system will be done in the SSCL experimental hall.

The readout sections will be assembled with the scintillator sections at the SSCL final assembly sight to prevent the delicate transmission fibers and the PMT's from becoming damaged during the transportation between the fabrication shop and the SSCL final assembly sight. Functional tests will be performed prior to installation of the forward calorimeters into the end caps.

Section 2.0 - APPLICABLE DOCUMENTS

Paragraph 2.1 - Government Documents

The following documents of the exact issue shown form a part of this specification to the extent specified herein. In the event of conflict between the documents referenced herein and the contents of this specification, the contents of this specification shall take precedence.

Drawings:

X3E-17048-xxxx, GEM Detector, Forward Hadron Calorimeter, Assembly Fixture
Material Specification; Hadron Calorimeter; Fasteners; SCT-013
Labor Analysis of Forward Hadron Calorimeter Assembly

Copies of specifications, standards, drawings, and publication required by suppliers in connection with specified procurement functions may be obtained from the SSCL/URA Subcontract Administrator.

Section 2.2 - Non-Government Documents

This paragraph is not applicable to this specification.

Section 3.0 - REQUIREMENTS

Paragraph 3.1 - Equipment

Special assembly equipment will include:

3.1 The SSCL assembly fixtures and up-righting fixtures will be part of the passive end cap operations.

3.2 One forward calorimeter module handling fixture (reuse from module assembly operation)

3.3 Two forward calorimeter holding stands at SSCL.

3.4 One tube/end plate assembly fixture.

3.5 ??? Readout section assembly fixtures.

3.6 2 rented tube hydroswaging machines.

Paragraph 3.2 - Materials

The materials for the scintillating barrel assembly are described or referenced in the following companion specifications:

Wave Lenght Shifting Fiber, Material Specification No. .....
Transmission Fiber, Material Specification No. .....
Scintillating Tile, Material Specification No. .....

Paragraph 3.3 - Required Procedures and Operations

3.1 Prior to installation into the GEM detector the forward hadron calorimeters with the passive end caps will be joined on the surface at the detector site. It is currently assumed that the assembly operation will be performed inside the facilities at the SSCL. The building will have normal industrial atmospheric control.

3.2 The detailed assembly procedures used to provide completed forward hadron calorimeters are to be determined by the Vendor The procedures will be evaluated by the SSCL on the basis of the resulting finished condition of the assemblies. The procedures for the assembly of the calorimeters provided in Section 3.4 are suggested as an initial starting point for planning the assembly operations.

3.3 Facitlities for the assembly of the forward hadron calorimeters will be provided by the SSCL.

Paragraph 3.4 - Recommended Procedures and Operations

The scintillator sections and the readout sections of the forward hadron calorimeters will be completely assembled before leaving the fabrication shops. Performance measurements will be taken prior to shipment to insure that the calorimeters function correctly. Reference dimensions will also be taken to verify that the calorimeters will fit the passive end caps.

a. A crane capable of lifting 50 metric tons will be required to handle the completely assembled forward hadron calorimeter modules. The crane must be able to reach the entire assembly area.

b. Assembly of the scintillating sections will begin with a dimensional inspection of the end plates, spacer plates, and the SS shell. When the components are accepted the end plates and spacer plates are welded to the bottom half of the SS shell, and placed on the assembly fixture. Other method than welding may be used for stabilizing the spacer plates in the SS shell. Following an inspection for proper alignment of the holes, spacers will be installed in the space between the ID of the SS shell and the tube/Absorber assembly.

c. Following an inspection of the capillary tubes, a layer of tubes will be inserted in the holes in the end plates. Both ends of the capillary tubes will be expanded against the end plates. Then, prefabricated tungsten pellets will be placed in the space between the capillary tubes until a complete layer of tungsten pellets are placed on top of the capillary tubes. The above process will then be repeated until all capillary tubes and the tungsten pellet assembly is complete.

d. The top half of the SS shell is then welded to the end plates. The manifold heads are then welded on to the end plates to complete the assembly of the scintillating section. The 5 cm diameter inlet and discharge piping and the passive absorber around the scintillating section will be installed prior to insertion of the scintillating section into the structural ring.

e. The above process from steps b to d will then be repeated for the scintillating section of the other module.

f. Assembly of the readout section will begin with a dimensional inspection of the fiber collector plates. when the collector plates are accepted and properly placed on the assembly fixture, the transmission fibers are inserted into the collector plates. The fibers are bundled into predetermined physics tower pattern for photo multiplier tube (PMT) connection. The bundled ends will be polished. This process will be repeated for the other readout sections for both forward calorimeter modules.

g. At the final assembly sight, the readout sections will be mounted onto the scintillating section. Following an inspection of alignment of the transmission fibers, the PMT' assemblies will be installed onto the ends of the transmission fiber bundles following. The PMT support structures are installed to insure the weight of the PMT assemblies will not damage the transmission fibers.

e. The forward calorimeters will be installed in the passive end caps at the surface of the GEM detector. This operation will be performed vertically. The entire assembly will then be up-righted.

c. Readout assemblies and test electronics will be installed to again verify the performance of the forward systems.

d. Thermal domes will be installed over the readout sections to facilitate the control of the PMT operating temperature. The completely assembled FHC's will be installed in the passive end caps at the surface of the GEM detector. This operation will be performed vertically. The entire assembly will then be up-righted.

d. The two systems will be installed in the passive end caps. This installation will be performed with the axis of the systems vertical to eliminate the need for installation rails and fixturing.

e. The passive end cap/forward hadron systems will be up-righted. Local cabling, liquid haling system piping and the borated polyethylene/lead shield will be installed.

f. Operational tests will be performed to insure the forward system is functioning correctly prior to installation in the experimental hall.

Paragraph 3.5 - Certification

Certification of operations and procedures used in the assembly of the forward hadron calorimeters will be based on the performance tests of the modules described in Section 4.0.

Section 4.0 - QUALITY ASSURANCE PROVISIONS

Paragraph 4.1 - Responsibilities for Inspection

All testing shall be performed by the vendor in accordance with the requirements of this specification.

Paragraph 4.2 - Monitoring Procedures for Equipment Used in Process

4.2.1 Handling fixtures to be used at the SSCL will be subject to safety inspection and authorization by the SSCL prior to operation.

4.2.2 Special training for individuals involved in the assembly process will be specified and provided by the SSCL.

4.2.3 Certain operations, such as crane operation, will be performed only by SSCL designated employees.

Paragraph 4.3 - Monitoring Procedures for Materials

Proper storage and handling of materials used in the modules will be the responsibility of the Vendor. The tile layer assemblies shall be stored in a controlled atmosphere having a temperature range between 55° and 80° F , and a relative humidity of less than 50%.

Paragraph 4.4 - Certification

TBD

Paragraph 4.5 - Test Methods

4.5.1 Test procedures and methods shall be proposed by the Vendor in the form of written documents. The procedures shall be approved by the Company prior to use.

4.5.2 Operational testing with a radioactive source (Ru-106, Sr-90). Measurements will be taken with a calibrated PMT as the source is scanned over the surface of the tile layer. Output values should be ±5% of a predetermined standard.

Paragraph 4.6 - Quality Assurance Records

The Vendor shall provide a procedure for the maintenance and distribution of quality assurance records prior to the beginning of the assembly operations. The procedure shall be reviewed and approved by the Company.

Section 5.0 - PREPARATION FOR DELIVERY

The forward calorimeters shall be adequately packaged for shipment to insure arrival in specified condition. The arrival condition of the forward calorimeters shall be the responsibility of the Vendor.

Section 6.0 - NOTES

Paragraph 6.1 - Intended Use

The forward calorimeters will be installed in the GEM particle physics detector where they will absorb and measure particles produced by collisions in the SSCL collider system. The scintillating liquid will produce light in proportion with the the energy of the particles while the segmentation of the assembly will provide information concerning the direction of the particle paths. Photomultiplier tubes will measure the light output from the segments via optic fibers and produce electroinc sighnals which will be analyzed to characterize the particles.

Paragraph 6.2 - Definitions

This paragraph is not applicable to this specification

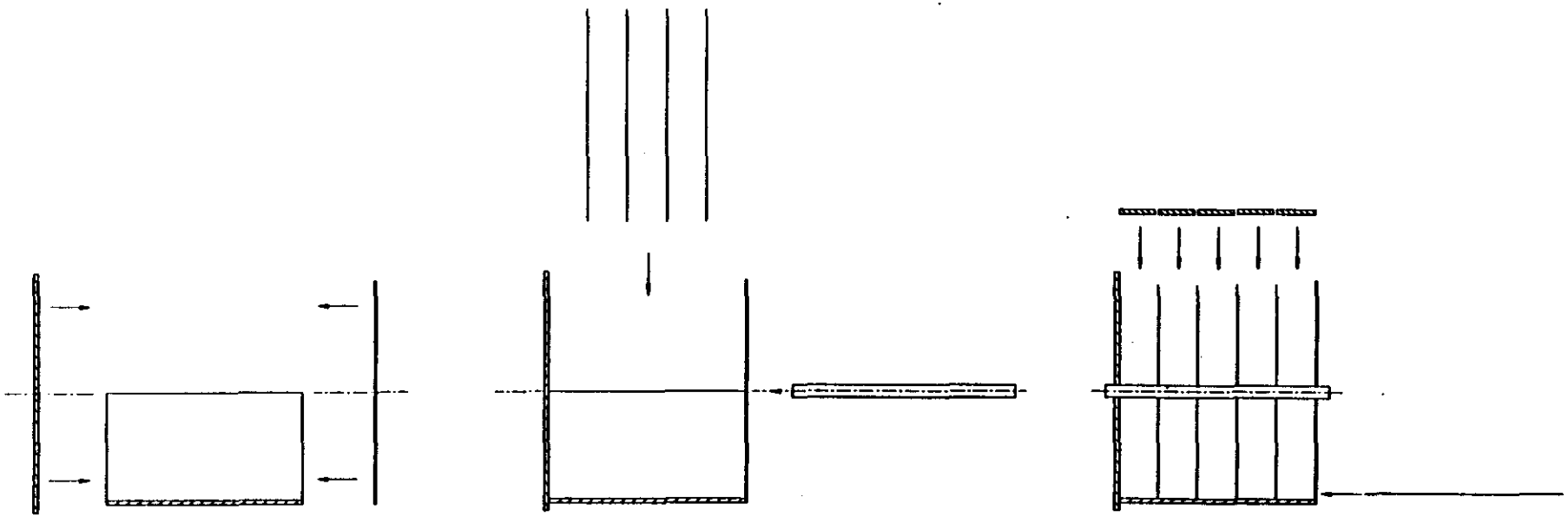

GEM DETECTOR
BARREL SCINTILLATING CALORIMETER
SCINTILLATING ASSY SEQUENCE SHT 1

385

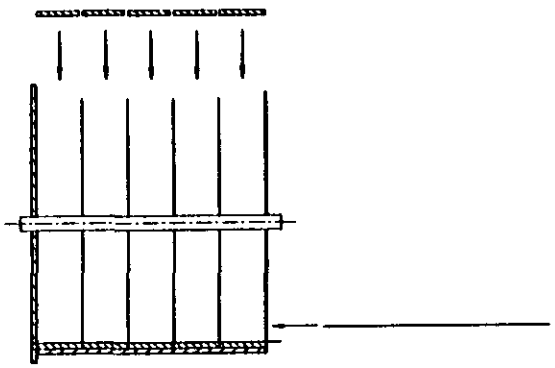

STEP 4

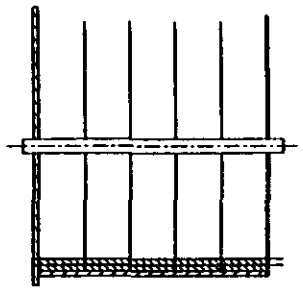

STEP 5

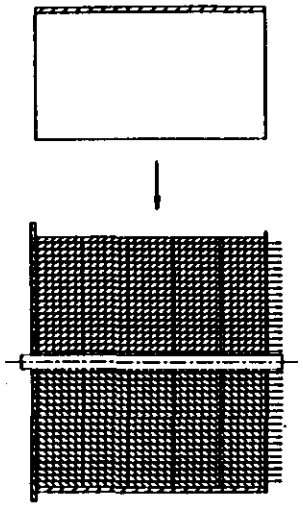

STEP 6

GEM DETECTOR
BARREL SCINTILLATING CALORIMTER
SCINTILLATING ASSY SEQUENCE SHT 2

X3E017048

386

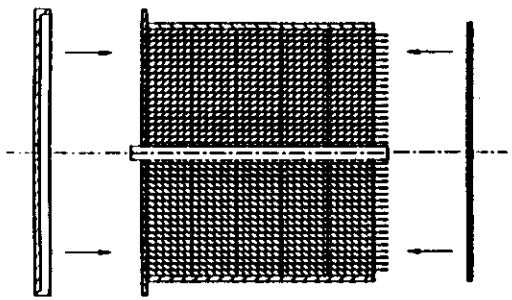

STEP 7

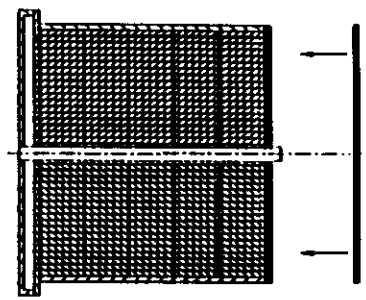

STEP 8

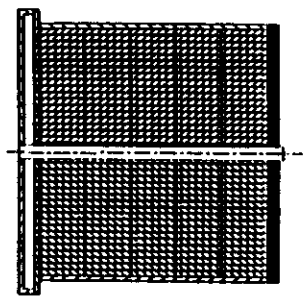

STEP 9

GEN DETECTOR
BARREL SCINTILLATING CALORIMTER
SCINTILLATING ASSY SEQUENCE SHT 3

N/A

1/20 | 1246 | X3E017948 | A076

DO NOT REVISE MANUALLY

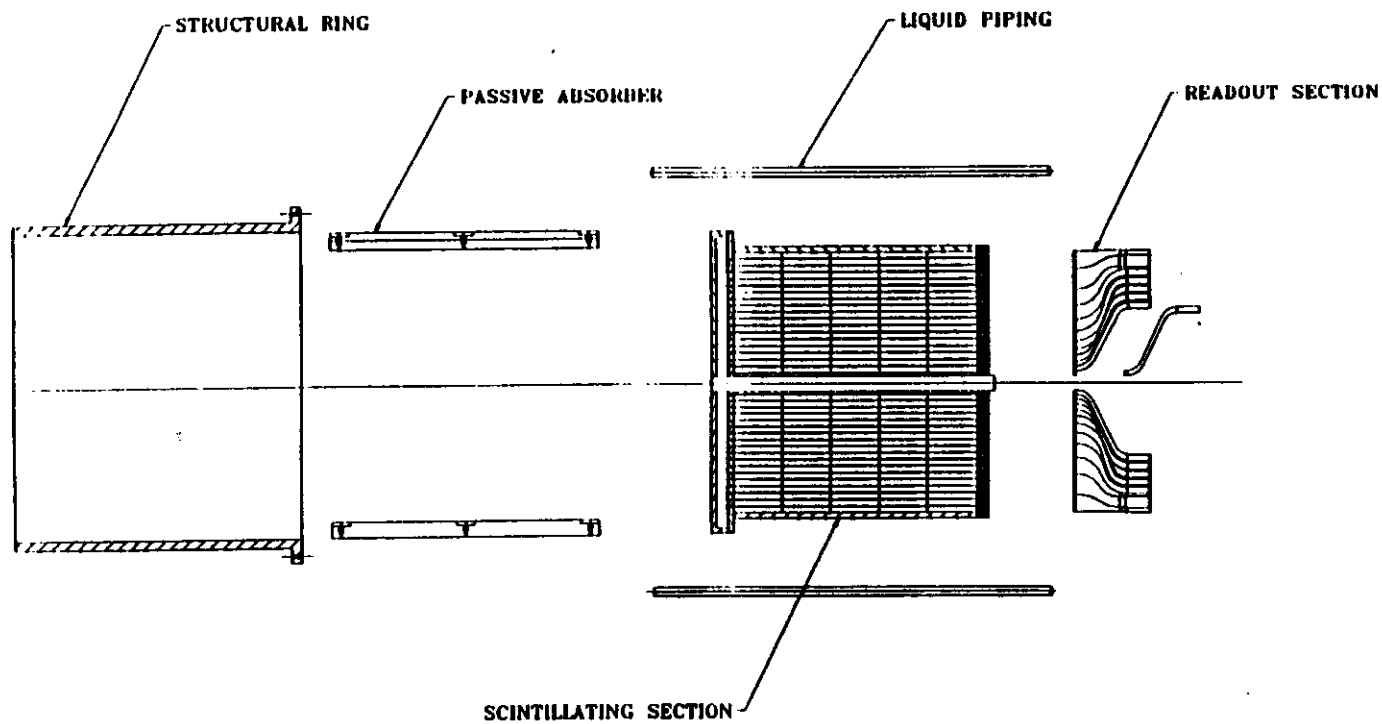
STRUCTURAL RING
PASSIVE ABSORBER
LIQUID PIPING
READOUT SECTION
SCINTILLATING SECTION

Scintillating Liquid Forward Calorimeter

(Tungsten heavymet with Scintillating Liquid)

20.5.1 Forward Calorimeter Assembly

Task Numbers	Task Descript.	Hours	Personload	Unit Tot PHRS	Quantity	Tot. PHRS
1	Retreive Sturauctural Ring	1.00	2	2.00	2	4
2	Setup Module/Structure Assembly Fixture	2.00	1	2.00	2	4
3	Setup Ring Structure in Fixture	4.00	2	8.00	2	16
4	Install FCAL in Ring Structure	4.00	4	16.00	2	32
5	Install PMT Support Structures	4.00	2	8.00	2	16
6	Install Thermal Dome over PMT's	8.00	2	16.00	2	32
7	Install Calibration Assembly	24.00	3	72.00	2	144
8	Connect Liquid Inlet Lines to Inlet Manifolds	2.00	2	4.00	240	960
9	Inspect Completed Assembly	2.00	1	2.00	2	4
10	Move Assembly to Storage/Next Station	2.00	2	4.00	2	8
	Total	53.00		134.00		1220
	Personnel Efficiency					1.25
	Estimated Personhours					1525
	Person Years @ 1770 Hr/Yr					0.86

20.5.2 Structures

Task Numbers	Task Descript.	Hours	Personload	Unit Tot PHRS	Quantity	Tot. PHRS
1	Setup Assembly Fixture	2.00	2	4.00	1	4
2	Retreive Ring Structure & Setup for Assembly	2.00	2	4.00	2	8
3	Assemble Liquid Inlet Piping to the Ring Structure	48.00	2	96.00	2	192
4	Assemble Passive Absorber	6.00	2	12.00	64	768
4	Install Passive Absorber to the Ring Structure	2.00	2	4.00	64	256
5	Inspect Completed Assembly	0.25	1	0.25	2	1
6	Move Assembly to Storage/Next Station	0.25	2	0.50	2	1
	Total	58.50		116.75		1226
	Personnel Efficiency					1.25
	Estimated Personhours					1532
	Person Years @ 1770 Hr/Yr					0.87

S. M. Chae-ORNL/3 25/93

Scintillating Liquid Forward Calorimeter

(Tungsten heavymet with Scintillating Liquid)

20.5.3.1 FCAL Module Assembly

Task Numbers	Task Descript.	Hours	Personload	Unit Tot PHRS	Quantity	Tot. PHRS
1	Setup Assembly Assembly Fixture	2.00	2	4.00	1	4
2	Retreive Scintillating Section	4.00	3	12.00	2	24
3	Attach Readout Sections to Scintillating Sections	1.00	2	2.00	240	480
4	Inspect Completed Assembly	1.00	1	1.00	2	2
5	Move Assembly to Storage/Next Station	2.00	3	6.00	2	12
	Total	10.00		25.00		522
	Personnel Efficiency					1.25
	Estimated Personhours					653
	Person Years@1770 Hr/Yr					0.37

20.5.3.2 Scintillating Section

Task Numbers	Task Descript.	Hours	Personload	Unit Tot PHRS	Quantity	Tot. PHRS
1	Retreive All materials	0.50	2	1.00	120	120
2	Setup Tubing Assembly Fixture	1.00	2	2.00	1	2
3	Insert Tubes	0.01	2	0.01	87000	967
4	Insert Abserbers	0.00	1	0.00	2958000	1643
5	Expand Tubes to Inlet Manifolds	0.03	1	0.03	87000	2900
6	Assemble Inlet Manifolds	40.00	2	80.00	2	160
13	Expand Tubesto End Plates	0.02	1	0.02	174000	2900
14	Insert Glass Tubes Inside the Copper Tubes	0.01	1	0.01	174000	967
15	Assemble Outlet Manifolds	40.00	2	80.00	2	160
16	Install Jacket Around Module	16.00	2	32.00	2	64
17	Inspect Completed Assembly	2.00	1	2.00	2	4
18	Move Assembly to Storage/Next Station	2.00	3	6.00	2	12
	Total	101.56		203.07		9899
	Personnel Efficiency					1.25
	Estimated Personhours					12373

S M Chae-ORNL 3/25/93

Scintillating Liquid Forward Calorimeter

(Tungsten heavymet with Scintillating Liquid)

Person Years@1770 Hr/Yr	6.99

20.5.3.3 Readout Section

Task Numbers	Task Descript.	Hours	Personload	Unit Tot PHRS	Quantity	Tot. PHRS
1	Retreive All materials	0.50	1	0.50	240	120
2	Setup Fiber Assembly Fixture	1.00	1	1.00	240	1
3	Prepare End Plates	1.00	1	1.00	240	240
4	Polish the Fiber Ends that lineup w/ Tubes	1.00	1	1.00	240	240
5	Insert Readout Fibers	0.00	1	0.00	87000	43
6	Collect Readout Fibers in Bundles	0.50	1	0.50	1920	960
7	Cut & Polish Collected Fiber's End	0.50	1	0.50	1920	960
8	Assemble PMT's/Light Mixers	1.00	1	1.00	480	480
9	Inspect Completed Assembly	0.50	1	0.50	240	120
10	Move Assembly to Storage/Next Station	0.25	1	0.25	240	60
	Total	6.25		6.25		3224
	Personnel Efficiency					1.25
	Estimated Personhours					4030
	Person Years@1770 Hr/Yr					2.28

20.10 Final Assembly

Task Numbers	Task Descript.	Hours	Personload	Unit Tot PHRS	Quantity	Tot. PHRS
1	Retreive FCAL Modules	3.00	4	12.00	2	24
2	Setup PA Endcapfor Assembly	8.00	4	32.00	2	64
3	Install FCAL Module into PA Endcap	8.00	4	32.00	2	64
4	Inspect Completed Assembly	2.00	2	4.00	2	8
5	Move Assembly to Storage/Next Station	8.00	4	32.00	2	64
	Total	29.00		112.00		224
	Personnel Efficiency					1.25
	Estimated Personhours					280
	Person Years@1770 Hr/Yr					0.16

S. M. Chae/ORNL/3/25/93

Scintillating Liquid Forward Calorimeter

(Tungsten heavymet with Scintillating Liquid)

20.11.2.5.1 Hall Installation of Liquid Handling System

Task Numbers	Task Descript.	Hours	Personload	Unit Tot PHRS	Quantity	Tot. PHRS
1	Move Components Down to Experiment Hall	40.00	2	80.00	1	80
2	Prepare for Equipment Installation	16.00	2	32.00	1	32
3	Install Filtration & Purification Equipment	40.00	3	120.00	2	240
4	Install Storage & Monitoring Equipment	40.00	3	120.00	1	120
5	Install Pumps	20.00	3	60.00	2	120
6	Install Piping & Valves	160.00	2.25	360.00	1	360
7	Perform Leak Inspection of Piping & Valves	16.00	2	32.00	10	320
8	Perform Functional Test of LH System	16.00	2	32.00	1	32
	Total	348.00		836.00		1304
	Personnel Efficiency					1.25
	Estimated Personhours					1630
	Person Years@1770 Hr/Yr					0.92

20.11.2.5.2 Hall Installation of Thermal Control

Task Numbers	Task Descript.	Hours	Personload	Unit Tot PHRS	Quantity	Tot. PHRS
1	Move Components Down to Experiment Hall	20.00	2	40.00	1	40
2	Prepare for Equipment Installation	16.00	2	32.00	1	32
3	Install Thermal Control Heat Exchanger	40.00	3	120.00	2	240
4	Install Air Duct & Dampers	120.00	2.25	270.00	1	270
5	Perform Functional Test of TC System	16.00	2	32.00	1	32
	Total	212.00		494.00		614
	Personnel Efficiency					1.25
	Estimated Personhours					768
	Person Years@1770 Hr/Yr					0.43

S M Chae ORNL 3/25/93

SPECIFICATION NO.:.....
ISSUE DATE:
REVISION:

Process Specification
For The
Installation
Of The
GEM Detector
Scintillating Barrel Calorimeter
At The
Superconducting Super Collider Laboratory
2550 Beckleymeade Avenue
Dallas, Texas 75237

APPROVED BY:

Mark Rennich, Technical Specialist Oak Ridge National Laboratory	Date

Table of Contents

Section 1.0 - SCOPE.....1.....
Section 2.0 - APPLICABLE DOCUMENTS.....1.....
Section 3.0 - REQUIREMENTS.....2.....
Section 4.0 - QUALITY ASSURANCE PROVISIONS .....3..
Section 5.0 - PREPARATION FOR DELIVERY.....4....
Section 6.0 - NOTES.....5.....

Section 1.0 - SCOPE

This procedure covers the requirements and processes for the installation of the scintillating barrel calorimeter. The procedures were established to correspond with the overall GEM installation plan. Thus in order to meet the tight schedule requirements of the GEM installation plan the end cap installation plan has been developed to minimize the amount of time required in the experimental hall. As the design of the detector progresses continuous efforts will be made to further limit the "down hole" effort and manpower.

Section 2.0 - APPLICABLE DOCUMENTS

Paragraph 2.1 - Government Documents

The following documents of the exact issue shown form a part of this specification to the extent specified herein. In the event of conflict between the documents referenced herein and the contents of this specification, the contents of this specification shall take precedence.

Drawings:

X3E-17048-xxxx, GEM Detector, Scintillating Barrel, Installation
X3E-17048-xxxx, GEM Detector, Scintillating Barrel, CDS/Barrel Joint

Copies of specifications, standards, drawings, and publication required by suppliers in connection with specified procurement functions may be obtained from the SSCL/URA Subcontract Administrator.

Section 2.2 - Non-Government Documents

This paragraph is not applicable to this specification.

Section 3.0 - REQUIREMENTS

Paragraph 3.1 - Equipment

The installation process will require two critical pieces of equipment;

3.1.1 Lifting Fixture; A lifting fixture designed to pick the combined assembly. The fixture will provide for both the lifting operations and the transportation of the pieces to the experimental hall.

3.1.2 Calorimeter Installation Rail System: The installation rail system provided for the movement of all the central detector elements will be used to transport the end cap/forward assembly from the drop point under the access shafts to the calorimeter support tube in the center of the experimental hall. The bridge cranes in the experimental hall have a lifting capacity of 100 tons which is significantly less than the weight of the assembly.

Paragraph 3.2 - Materials

No special materials will be required for the installation operation.

Paragraph 3.3 - Required Procedures and Operations

3.3.1 The installation process will be directed by the SSCL or a designated representative.

3.3.2 Special training for individuals involved in the installation process will be specified and provided by the SSCL.

3.3.3 Entry to the experimental hall be permitted for authorized personnel only, at the discretion of the SSCL.

3.3.4 Certain operations, such as crane operation, will be performed only by SSCL designated employees.

Paragraph 3.4 - Recommended Procedures and Operations

a. The scintillation half barrels will be completely assembled and tested on the surface.

b. The half barrels will be joined together prior to installation in the experimental hall to insure proper fit-up. The test fit-up will include components such as cooling pipes, liquid calorimeter rails and cable/pipe ways.

c. Barrel installation rails are installed in the experimental hall on both sides of the CDS.

d. The half barrels will be installed in the experimental hall via two shafts and placed on the installation rail systems.

e. The half barrels are joined together and to the CDS.

f. Auxiliary components such as the liquid system rails and electronics cooling pipes are installed.

g. Installation rails are either removed or left in place at the discretion of the SSCL installation coordinator.

Paragraph 3.5 - Certification

Detailed installation procedures shall be provided by the Vendor The procedures will be evaluated and approved by the SSCL prior to the beginning of the installation process. The procedures for the installation of the end caps and forward calorimeters provided in Section 3.4 are suggested as an initial starting point for planning the assembly operations.

Section 4.0 - QUALITY ASSURANCE PROVISIONS

Paragraph 4.1 - Responsibilities for Inspection

Periodic inspections will be undertaken by the SSCL during the installation process. Inspections will evaluate the positional accuracy of the placement, compliance with safety requirements and adherence with the installation procedure.

Paragraph 4.2 - Monitoring Procedures for Equipment Used in Process

All lifting fixtures and lifting plans will be inspected and certified by the SSCL prior to usage.

Paragraph 4.3 - Monitoring Procedures for Materials

This paragraph is not applicable to this specification

Paragraph 4.4 - Certification

TBD

Paragraph 4.5 - Test Methods

Test procedures and methods for all lifting fixtures shall be submitted by the Vendor to the SSCL for approval.

Paragraph 4.6 - Quality Assurance Records

The Vendor shall provide a procedure for the maintenance and distribution of quality assurance records prior to the beginning of the installation operations. The procedure shall be reviewed and approved by the Company.

Section 5.0 - PREPARATION FOR DELIVERY

This paragraph is not applicable to this specification

Section 6.0 - NOTES

Paragraph 6.1 - Intended Use

The barrel scintillating calorimeter will be installed in the GEM particle physics detector where it will absorb and measure particles produced by collisions in the SSCL collider system. The scintillating tiles in the barrel will produce light in proportion to the number and energy of the particles. Photomultiplier tubes measure the light output from the tiles via optic fibers and produce electronic signals which are analyzed to characterize the particles.

Paragraph 6.2 - Definitions

This paragraph is not applicable to this specification

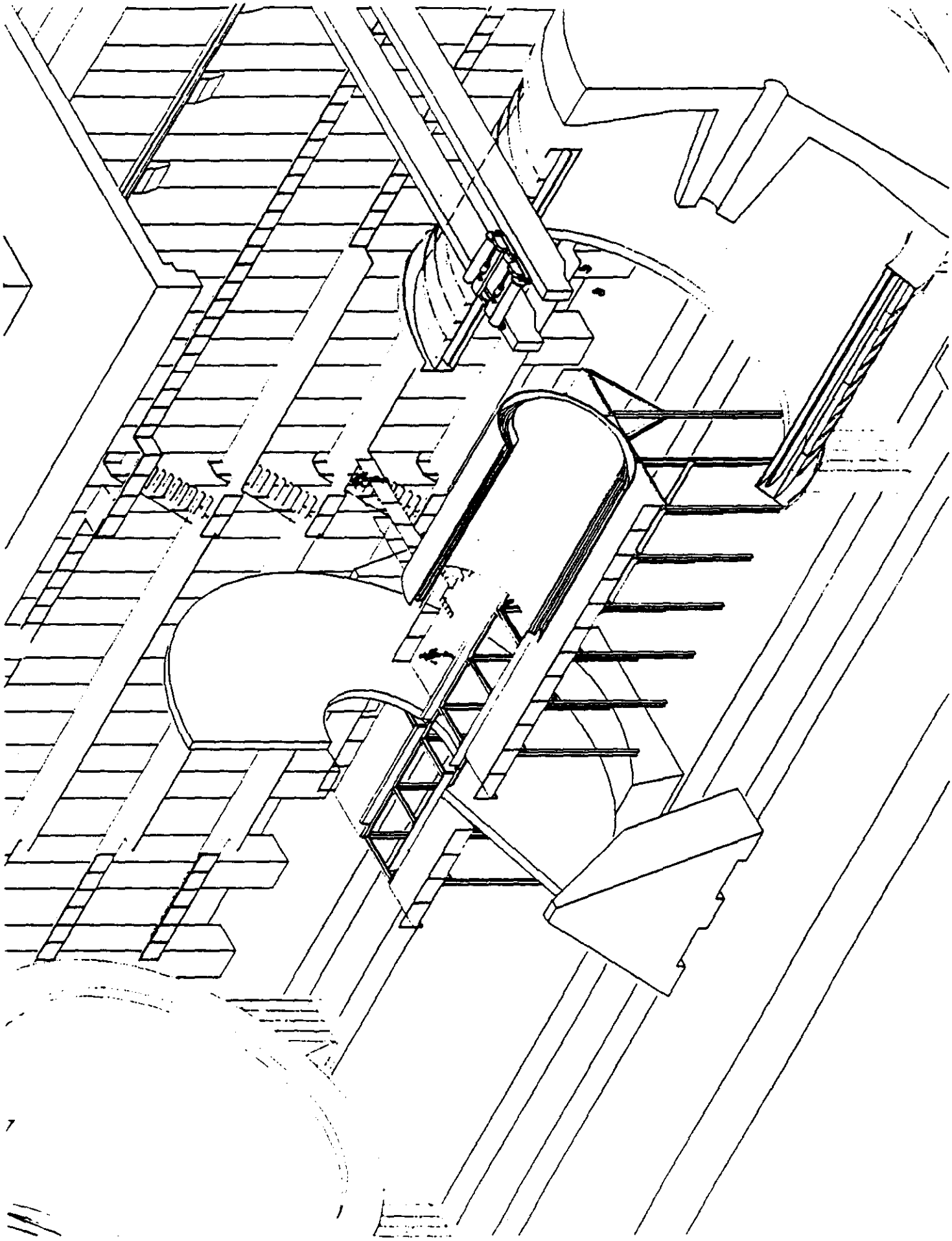

This conceptual print is the property of HILMAN, INCORPORATED. It is not meant as a scale drawing. It cannot be reproduced without prior approval from Hilman, Inc.

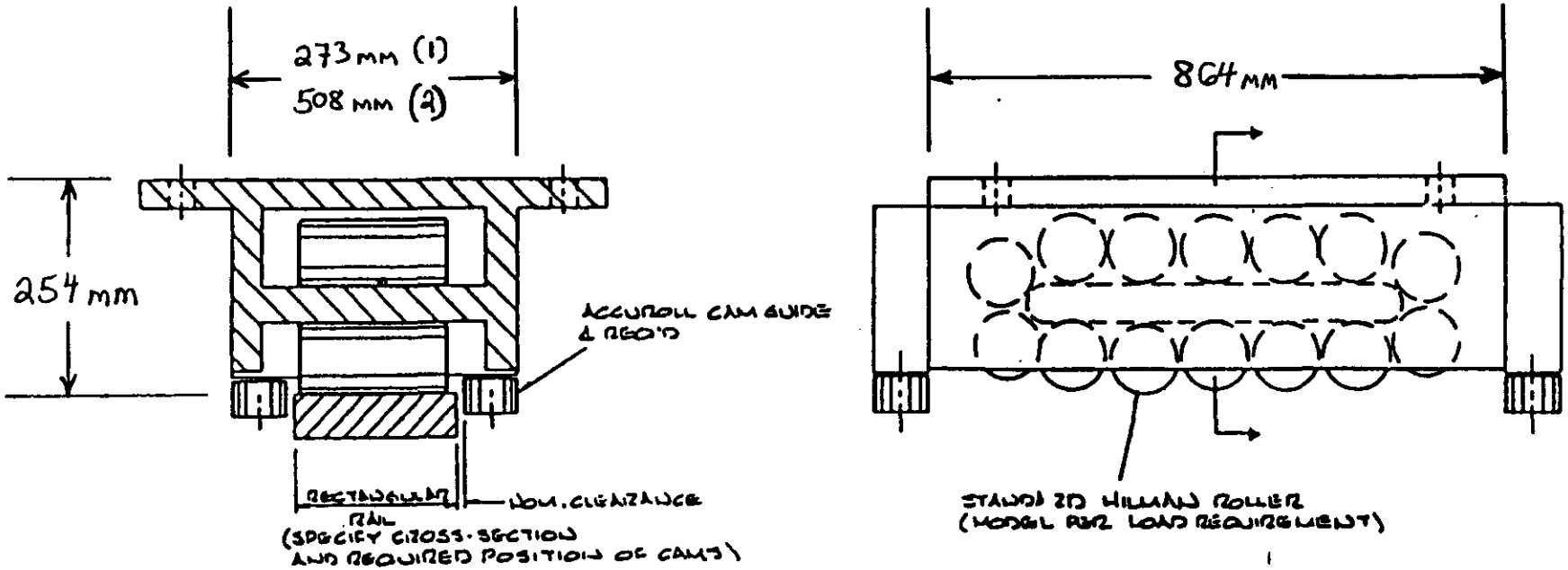

(1) 300 Metric Ton Capacity, 301 Kg per Assy.

(2) 500 Metric Ton Capacity, 583 Kg per Assy.

Note: Roller Assy. Height & Length Same for 300 & 500 MT

TOLERANCES	HILMAN EQUIPMENT CO 2600 ATLANTIC AVE WALL NJ 07719	
DECIMAL	SCALE	DRAWN BY
		APPROVED BY
FRACTIONAL	TITLE ACCUROLL-R SYSTEM FLAT RAIL	
ANGULAR	DATE 11-10-81	DRAWING NUMBER R-103

SPECIFICATION NO.:.....
ISSUE DATE:
REVISION:

Process Specification
For The
Installation
Of The
GEM Detector
Forward Hadronic Calorimeters
and
Calorimeter Passive End Caps
At The
Superconducting Super Collider Laboratory
2550 Beckleymeade Avenue
Dallas, Texas 75237

APPROVED BY:

Mark Rennich, Technical Specialist Oak Ridge National Laboratory	Date

SPECIFICATION NO.:

PREPARED BY:

Mark Rennich, Technical Specialist
Oak Ridge National Laboratory

Date

REVIEWED BY:

NAME, TITLE, ORG.
REQUESTER

Date

REVIEWED BY:

NAME, TITLE, ORG.
SUPERVISON

Date

REVIEWED BY:

Mike Harris, GEM Lead Engineer
SSCL Laboratory

Date

REVIEWED BY:

NAME, TITLE, ORG.
SSCL Quality Assurance

Date

REVIEWED BY:

NAME, TITLE, ORG.
ES&H Overisght; SSCL

Date

Table of Contents

Section 1.0 - SCOPE.....1.....
Section 2.0 - APPLICABLE DOCUMENTS.....1.....
Section 3.0 - REQUIREMENTS.....2.....
Section 4.0 - QUALITY ASSURANCE PROVISIONS .....3....
Section 5.0 - PREPARATION FOR DELIVERY.....4.....
Section 6.0 - NOTES.....5.....

Section 1.0 - SCOPE

This procedure covers the requirements and processes for the installation of two passive end cap/forward hadron calorimeter assemblies. This procedure is intended to correspond with the overall GEM installation plan. Thus in order to meet the tight schedule requirements of the GEM installation plan the end cap installation plan has been developed to minimize the amount of time required in the experimental hall. As the design of the detector progresses continuous efforts will be made to further limit the "down hole" effort and manpower.

Section 2.0 - APPLICABLE DOCUMENTS

Paragraph 2.1 - Government Documents

The following documents of the exact issue shown form a part of this specification to the extent specified herein. In the event of conflict between the documents referenced herein and the contents of this specification, the contents of this specification shall take precedence.

Drawings:

X3E-17048-xxxx, GEM Detector, Passive End Caps/Forward Installation
X3E-17048-xxxx, GEM Detector, Passive End Caps/Forward Installation Fixture

Copies of specifications, standards, drawings, and publication required by suppliers in connection with specified procurement functions may be obtained from the SSCL/URA Subcontract Administrator.

Section 2.2 - Non-Government Documents

This paragraph is not applicable to this specification.

Section 3.0 - REQUIREMENTS

Paragraph 3.1 - Equipment

The installation process will require two critical pieces of equipment;

3.1.1 Lifting Fixture; A lifting fixture designed to pick the combined assembly will be required to up-right and transport the pieces to the experimental hall.

3.1.2 Calorimeter Installation Rail System: The installation rail system provided for the movement of all the central detector elements will be used to transport the end cap/forward assembly from the drop point under the access shafts to the calorimeter support tube in the center of the experimental hall. The bridge cranes in the experimental hall have a lifting capacity of 100 tons which is significantly less than the weight of the assembly.

Paragraph 3.2 - Materials

No special materials will be required for the installation operation.

Paragraph 3.3 - Required Procedures and Operations

3.3.1 The installation process will be directed by the SSCL or a designated representative.

3.3.2 Special training for individuals involved in the installation process will be specified and provided by the SSCL.

3.3.3 Entry to the experimental hall be permitted for authorized personnel only, at the discretion of the SSCL.

3.3.4 Certain operations, such as crane operation, will be performed only by SSCL designated employees.

Paragraph 3.4 - Recommended Procedures and Operations

a. The passive end caps and forward calorimeters will be independently assembled and tested on the surface.

b. The passive end caps and hadron forward systems will be joined together prior to installation in the experimental hall.

c. Barrel installation rails are installed in the experimental hall on both sides of the CDS if not already in place.

d. The two assembles will be installed in the experimental hall via two shafts and placed on the installation rail systems.

e. The assemblies are rolled on the installation rails into position and fixed to the scintillating barrel calorimeter.

f. Auxiliary components such as muon shielding and scintillating liquid pipes are installed.

g. Installation rails are either removed or left in place at the discretion of the SSCL installation coordinator.

Paragraph 3.5 - Certification

Detailed installation procedures shall be provided by the Vendor The procedures will be evaluated and approved by the SSCL prior to the beginning of the installation process. The procedures for the installation of the end caps and forward calorimeters provided in Section 3.4 are suggested as an initial starting point for planning the assembly operations.

Section 4.0 - QUALITY ASSURANCE PROVISIONS

Paragraph 4.1 - Responsibilities for Inspection

Periodic inspections will be undertaken by the SSCL during the installation process. Inspections will evaluate the positional accuracy of the placement, compliance with safety requirements and adherence with the installation procedure.

Paragraph 4.2 - Monitoring Procedures for Equipment Used in Process

All lifting fixtures and lifting plans will be inspected and certified by the SSCL prior to usage.

Paragraph 4.3 - Monitoring Procedures for Materials

This paragraph is not applicable to this specification

Paragraph 4.4 - Certification

TBD

Paragraph 4.5 - Test Methods

Test procedures and methods for all lifting fixtures shall be submitted by the Vendor to the SSCL for approval.

Paragraph 4.6 - Quality Assurance Records

The Vendor shall provide a procedure for the maintenance and distribution of quality assurance records prior to the beginning of the installation operations. The procedure shall be reviewed and approved by the Company.

Section 5.0 - PREPARATION FOR DELIVERY

This paragraph is not applicable to this specification

Section 6.0 - NOTES

Paragraph 6.1 - Intended Use

The end cap and forward calorimeters will be installed in the GEM particle physics detector where they will absorb and measure particles produced by collisions in the SSCL collider system. In the scintillating liquid in the forward calorimeter will produce light in proportion to the number and energy of the particles. Photomultiplier tubes measure the light output from the tiles via optic fibers and produce electronic signals which are analyzed to characterize the particles.

Paragraph 6.2 - Definitions

This paragraph is not applicable to this specification

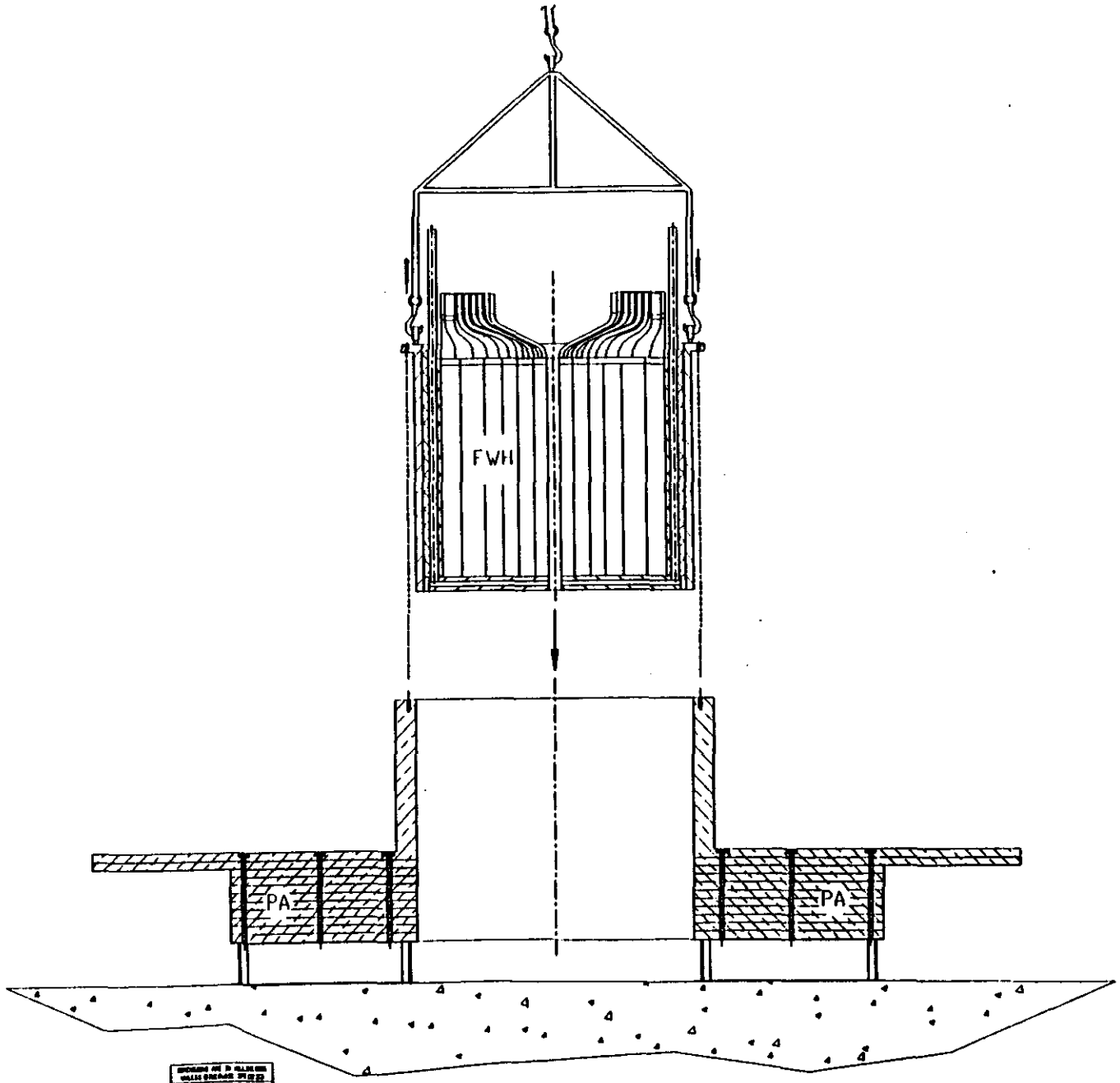

GEM DETECTOR
FORWARD END CAPS
ASSEMBLY PROCEDURE

N/A

X3E017848

A0375

ORIGINAL ISSUE

DO NOT REVISE MANUALLY

410

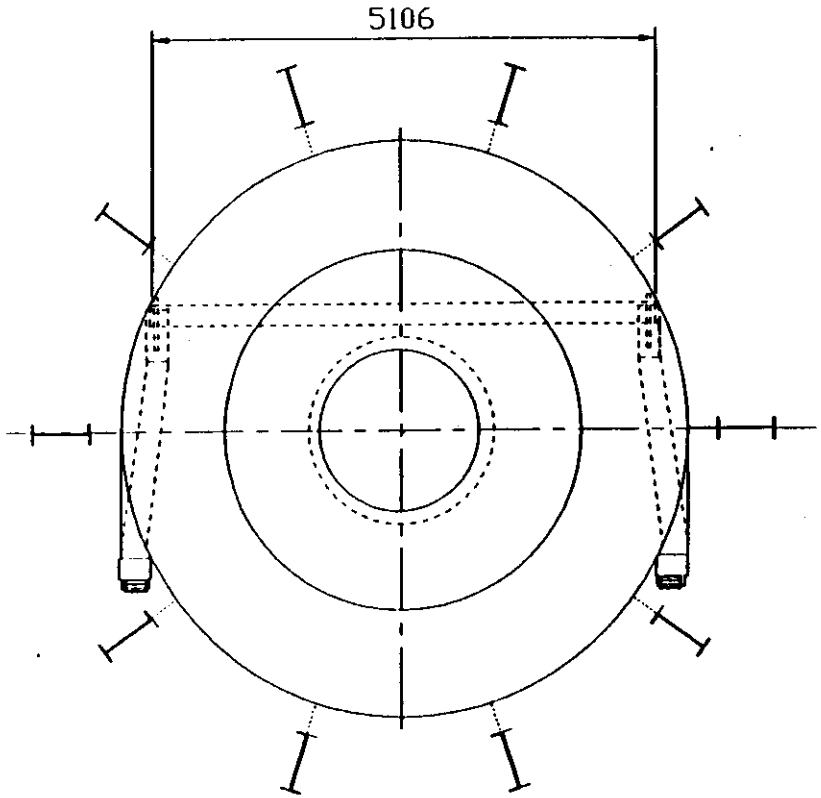

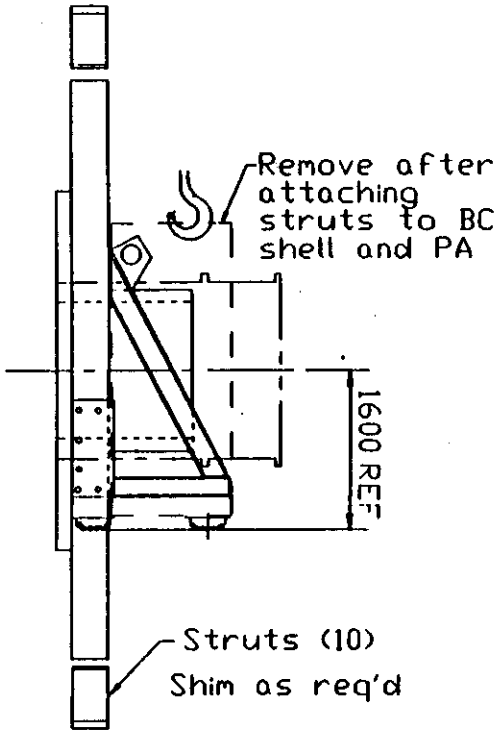

GEN DETECTOR
BARREL SCINTILLATING CALIBRATER
GEN DETECTOR

111

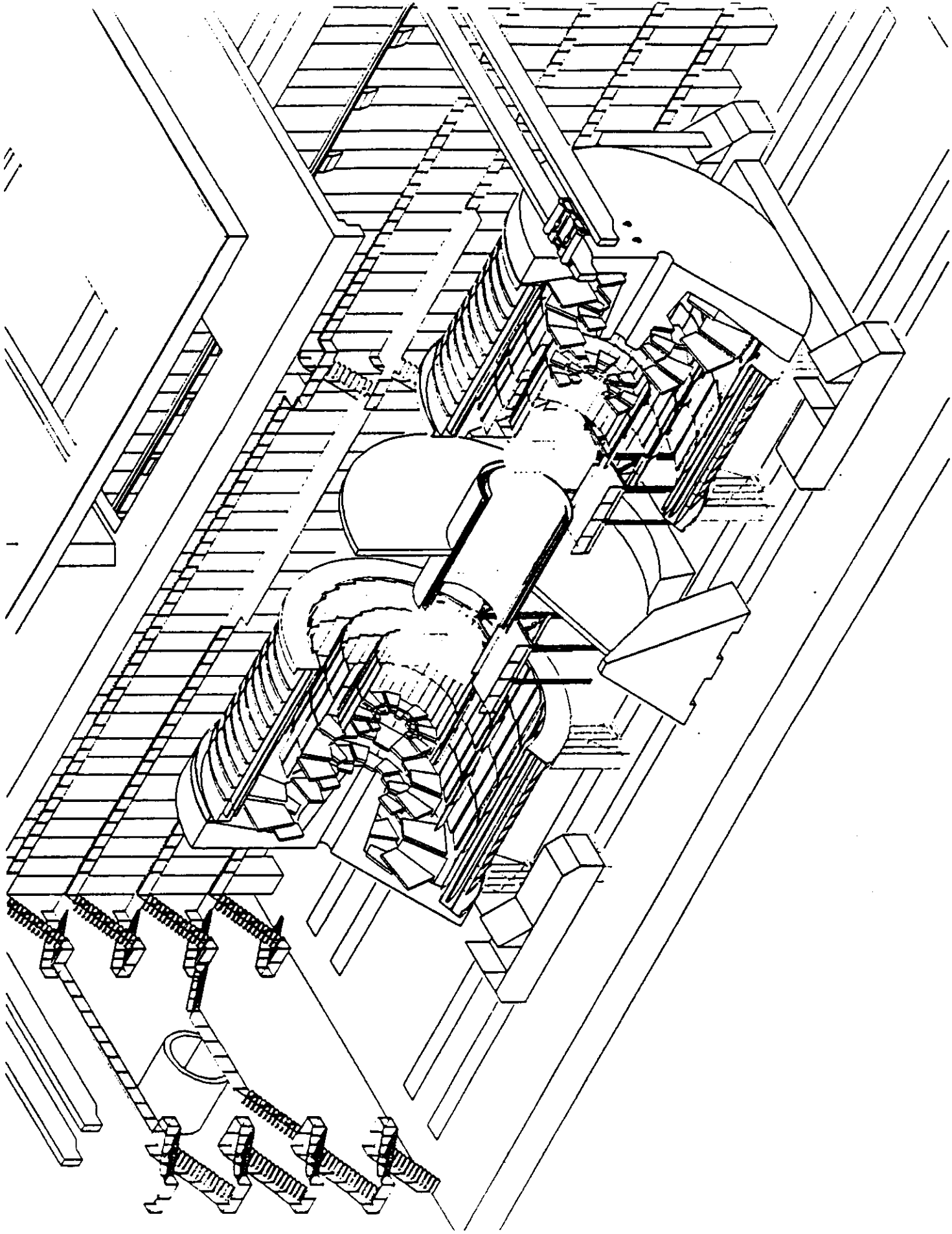

6. Quality Control Procedures

It is the intention of the external calorimeter group and the GEM collaboration to fully involve all collaborating institutions in the successful completion of the GEM detector. Careful control of the quality of the detector components and assemblies at all stages is critical to this goal. Thus each participant in the fabrication and construction of the detector will be expected to take responsibility for verifying the quality of the completed components or assemblies. It will be the responsibility of the external calorimeter engineering and physics group to confirm the results of tests and documentation before subassemblies and components are released for use.

The SSCL will provide overall guidance in establishing quality assurance requirements. These requirements will be adapted by the GEM collaboration and applied to the external calorimeter. Each collaborator will be requested to provide a written quality assurance plan developed in cooperation with the external calorimeter collaboration. The plan will include a description of inspections, inspection procedures, documentation procedures and final acceptance procedures. Specific testing requirements are outlined in Section 4 for each major material element. A general outline of the inspections for each of the subsystems in the external calorimeter are included in the assembly procedures, Section 5.

7. Communications

GEM is a large collaboration with over 600 institutional representatives, 120 institutes and 10 countries contributing. To achieve a successful, on-time startup of the detector, rapid and accurate communications must be maintained throughout the life of the project. To date, all available means have been employed. The two most important methods are the monthly meetings at the SSCL and Electronic Mail (E-mail). In the future, teleconferencing is also expected to become a widely used means of communication.

Formal communications during the fabrication and assembly phases will be logged in the documentation system to be maintained by the SSCL. Each collaborating institute will produce a written monthly report which will record the progress of the detector. In addition, a separate system will document schedule deviations, design changes and quality deviations. During the assembly and installation operations at the SSCL institutes involved in the in the activities will have full-time representatives on-site to facilitate the rapid communications required for these activities.

GEM maintains a current listing of all members, including addresses, phone numbers and Email addresses on a computer at the SSCL. The computer name is SSCVX1. The listing can be accessed by entering "GEMLIB" for USERNAME and following instructions. A password is not required. Passwords for the SSCVX1 can be obtained by international partners to have a more complete use of the mail services at the SSCL.

8. Engineering

It is the intention of the SSCL to involve the appropriate engineering organizations from all collaborating institutes in the final design of the GEM detector. Institute engineers are expected to be better able to design detailed manufacturing and assembly processes appropriate to the resources available. It is important for these engineers to be involved in GEM as soon as possible and to begin to develop working relationships with the United States engineers currently leading the design effort. For the external calorimeter system the lead engineering organization is Oak Ridge National Laboratory.

The conceptual design of the external calorimeters has been completed; however, substantial detailed engineering remains to be completed. Engineering will proceed with two goals in mind; physics performance and cost effective fabrication. Traditional engineering techniques for incorporating manufacturability and assembly efficiency do not require discussion. Physics requirements may not be as familiar.

GEM is a subatomic particle detector, consequently, physics requirements are paramount in the design and construction of the external calorimeter . Thus, the engineering and physics interact, primarily in two ways. First, the physics requirements are determined in a study of all the GEM Detector subsystems in a computational analysis based on 'monte carlo' techniques. Second, the computer software required to process signals from the detector is based on the physical characteristics of the detector. As a result of this interrelationship, external calorimeter physicists will be involved throughout the design and fabrication phases to insure that the subsystem is capable of the optimum performance.

The design process for the scintillating barrel and forward hadron calorimeters will progress in steps. These steps will be defined by a series of scheduled design reviews in which all participating collaborators will be requested to critique the overall progress of the project. The development of prototypes of each of the subsystems will also be scheduled to fit into the overall review scheme to take advantage of the "hands-on" experience gained by building the preproduction models.

Control of the design process will be administered by the SSCL. A document file at the SSCL will maintain engineering and manufacturing reports. Specific reports to be included in the file system are:

Safety reviews
Structural analyses
Design Change Notifications
Schedules
Monthly reports
Minutes of subsystem design review meetings
Minutes of subsystem manufacturing review meetings

gem

γeμ

Presentation by:

Yu. Kamychkov
ITEP/ORNL

Ik. Kamyshkov

Industrial contacts

1. Material price (Cu, Ti, ...)
2. Polychrom WLS fibers (INR, Kurchatov)
3. Kharkov Sci. tiles (Belarus) (~?3$ /kg)
4. Khrunichev airspace factory (Moscow) } contact in July
5. Samara airspace factory } contact in July

ГУМ	1050	1575	+250	«Деловые услуги»	Другим проявлением роста активности на внебиржевом рын-

По данным агентства СКЕЙТ-ПРЕСС.

СЫРЬЕВЫЕ РЫНКИ РОССИИ

Биржевые цены на основные экспортно-импортные товары 2 июня

	МТВ	МБЦМ
	тыс. руб. за т	
Нефть сырая	26	
Бензин А-76	55	
Дизельное топливо	49	
Топочный мазут М-100	22,7	
Карбамид марки Б	48	
Полиэтилен высокого давления	300	
Полипропилен	540	
Алюминий первичный (в чушках)	750	540
Прокат алюминия	550	510
Лом и отходы алюминия	350	220
Медь рафинированная	1100 (969)	900
Медный прокат	— (650)	875
Лом и отходы меди	750 (550)	450
Никель Н-1	— (3110)	2700
Цинк ЦО, Ц1	770	640
Свинец С1	455	—
Титан (БТ1-0)	400	800
Магний	970	
Латунь прокат	650 (450)	460
Натрий металлический	—	
Калий металлический	—	
Чугун передельный	70 (113*)	
Лом и отходы черных металлов	10	
Прокат черных металлов	80	
Пшеница твердая	—	
Пшеница ценная 3 класса	36	
Рожь продовольственная	29	
Ячмень рядовой	32	
Ячмень пивоваренный	36	
Сахар-песок	315 (287)	
Цемент М-400 Портланд в мешках	5	
Цемент М-500 Портланд в мешках	8	
	руб. за кг	
Чай индийский	2000 (2,54)	
Кофе в зернах жареный (Арабика, Бразилия)	1600	
Какао-порошок	— (1,6)	
	руб. за шт.	
Кирпич красный М-100	—	
Кирпич силикатный М-150	—	
	руб. за куб. м	
Деловая древесина хвойная	10500 (89*)	
Деловая древесина лиственная	— (36*)	
Пиломатериалы хвойные	— (160)	
Пиломатериалы лиственные	—	

*) С лицензией.
В скобках указаны цены предложения в долларах США.

Мировые цены базовых товаров

ЦЕНЫ НА ТОВАРЫ НАРОДНОГО ПОТРЕБЛЕНИЯ ИЗ СТРАН ЮГО-ВОСТОЧНОЙ АЗИИ

	Цена $/шт.
Пуховые пальто	20.0—30.0
Куртки зимние	18.0—25.0
Куртки осенние	12.0—15.0
Куртки кожаные	45.0—65.0
Пальто женские из современных материалов	20.0—30.0
Мужские и женские плащи	20.0—30.0
Свитера и кофты	8.0—11.0
Свитера и кофты из ангорской шерсти	18.0—22.0
Костюмы женские	20.0—30.0
Костюмы мужские	25.0—32.0
Джинсы	6.0—8.0
Спортивные костюмы	10.0—17.0
Рубашки с коротким рукавом	2.9
Рубашки полиэстр+хлопок	4.0—5.0
Трусы женские и мужские	0.2—0.5
Бюстгалтеры	1.0—2.0
Колготки и лосины	0.35—1.1
Носки	0.4—0.6
Кроссовки	
заменитель	2.5—5.5
кожа	8.0—12.0
Ботинки утепленные	7.0—9.0
Сапоги женские	
заменитель	6.0—10.0
кожа	10.0—16.0
Туфли женские	
заменитель	5.5—7.5
кожа	10.0—15.0
Мужские туфли	
заменитель	5.0—7.0
кожа	8.5—11.5
Детская обувь	3.5—5.0
Бытовые электроприборы	5.0—13.0
Двухкассетные магнитофоны	20.0—30.0
Автомагнитолы/автоприемники	8.0—15.0
Телефоны	4.5—8.0
Телевизоры	70.0—240.0
Видеоплейеры/видеомагнитофоны	140.0—225.0
Часы	5.0—7.0
Зонты	1.25—1.6
Сумки	2.6—6.5
Игрушки	1.0—2.5
Ткани:	
хлопок	1.2—1.5
вискоза	1.75
смесовая	2.0
трикотаж	1.5—4.5
велюр	4.5—6.5

Поставки со склада в Москве, минимальная партия — 20-футовый контейнер, оплата в СКВ.

По данным Центра международной коммерческой информации.

МИРОВЫЕ СЫРЬЕВЫЕ РЫНКИ

Лондонские рынки наличных товаров 2 июня

Сырая нефть	
($ за баррель [фоб] июль)	
дюбайская	16.23—6.30z
смесь «Брент» (dated)	18.50—8.57
смесь «Брент» (поставка в июле)	18.68—8.75
нефть wti	20.16—0.20z
Нефтепродукты	
(Северо-Западная Европа, цена с учетом срочной поставки, $ за тонну [сиф])	
премиальный бензин	207—210
газойль	172—173
мазут	66—67
нафта	183—185

ЛОНДОНСКАЯ БИРЖА МЕТАЛЛОВ

	Поставка	Офиц. цена 2 июня	высш./низш.	ежеднев. оборот (партий)
алюминий, чистота 99.7% ($/т)	немедленная	1121—1,5	1121/1120.5	
	через 3 мес.	1144.5—5,0	1150,5/1141,5	36534
медь, сорт «А» (£/т)	немедленная	1133—3,5	1134/1133,5	
	через 3 мес.	1145,5—50	1171/1149	61745
свинец (£/т)	немедленная	255—5,25	255.5/255,5	
	через 3 мес.	265—5,5	267/265,5	3437
никель ($/т)	немедленная	5615—20		
	через 3 мес.	5685—7	5710/5665	5245
олово ($/т)	немедленная	5140—5	5150/5150	
	через 3 мес.	5205—10	5310/5150	3747
цинк особо высокого качества ($/т)	немедленная	926—7	926/926	
	через 3 мес.	946—7	966/937	18003

МЕЖДУНАРОДНАЯ НЕФТЯНАЯ БИРЖА (IPE)

Цемент М-400 Портланд в мешках	5
Цемент М-500 Портланд в мешках	8
	руб. за кг
Чай индийский	2000 (2,54)
Кофе в зернах жареный (Арабика, Бразилия)	1600
Какао-порошок	— (1,6)
	руб. за шт.
Кирпич красный М-100	—
Кирпич силикатный М-150	—
	руб. за куб. м
Деловая древесина хвойная	10500 (89*)
Деловая древесина лиственная	— (36*)
Пиломатериалы хвойные	— (160)
Пиломатериалы лиственные	—

*) С лицензией.
В скобках указаны цены предложения в долларах США.

Детская обувь	3.5—5.0
Бытовые электроприборы	5.0—13.0
Двухкассетные магнитофоны	20.0—30.0
Автомагнитолы/автоприемники	8.0—15.0
Телефоны	4.5—8.0
Телевизоры	70.0—240.0
Видеоплейеры/видеомагнитофоны	140.0—225.0
Часы	5.0—7.0
Зонты	1.25—1.6
Сумки	2.6—6.5
Игрушки	1.0—2.5
Ткани:	
хлопок	1.2—1.5
вискоза	1.75
смесовая	2.0
тонкотаж	1.5—4.5
велюр	4.5—6.5

Поставки со склада в Москве, минимальная партия — 20-футовый контейнер, оплата в СКВ.

По данным Центра международной коммерческой информации.

МИРОВЫЕ СЫРЬЕВЫЕ РЫНКИ

Лондонские рынки наличных товаров 2 июня

Сырая нефть	
($ за баррель [фоб] июль)	
дюбайская	16.23—6.30z
смесь «Брент» (dated)	18.50—8.57
смесь «Брент» (поставка в июле)	18.68—8.75
нефть wti	20.16—0.20z
Нефтепродукты	
(Северо-Западная Европа, цена с учетом срочной поставки, $ за тонну [сиф])	
премиальный бензин	207—210
газойль	172—173
мазут	66—67
нафта	183—185

По оценкам Петролеум Аргус

Прочие	
золото ($ за тройскую унцию) ⊙	375.25
серебро (с за тройскую унцию) ⊙	460c
платина ($ за тройскую унцию)	396.00
палладий ($ за тройскую унцию)	123.25
медь (производство США)	87.0c
свинец (производство США)	34.63c
олово (на бирже Куала-Лумпуо)	13.70r
олово (на бирже Нью-Йорка)	237c
цинк (производство США, сорт «Прайм вестерн»)	62.0c
сахар (сырец) $	275.7
сахар (рафинад) $	278.5
ячмень (английский кормовой)	110.5
кукуруза (США, сорт № 3, желтая) (£)	166.5
каучук июнь ★	59.00p
каучук июль ★	59.25p
соевые бобы (США, [illegible])	176.5z
хлопок сорта «А»	59.70c
шерсть (сорта 64 супер)	375p

ЛОНДОНСКАЯ БИРЖА МЕТАЛЛОВ

	Поставка	Офиц. цена 2 июня	высш./низш.	ежеднев. оборот (партий)
алюминий, чистота 99.7% ($/т)	немедленная	1121—1,5	1121/1120.5	
	через 3 мес.	1144.5—5,0	1150,5/1141,5	36534
медь, сорт «А» (£/т)	немедленная	1133—3,5	1134/1133,5	
	через 3 мес.	1149,5—50	1171/1149	61745
свинец (£/т)	немедленная	255—5,25	255.5/255,5	
	через 3 мес.	265—5,5	267/265,5	3437
никель ($/т)	немедленная	5615—20		
	через 3 мес.	5685—7	5710/5665	5245
олово ($/т)	немедленная	5140—5	5150/5150	
	через 3 мес.	5205—10	5310/5150	3747
цинк особо высокого качества ($/т)	немедленная	926—7	926/926	
	через 3 мес.	946—7	966/937	18003

МЕЖДУНАРОДНАЯ НЕФТЯНАЯ БИРЖА (IPE)

	Закрытие	Предыдущая	Высшая	Низшая
Газойль $/тонна				
Июнь	171.25	171.50	171.50	169.75
Июль	172.25	173.00	172.50	170.75
Август	174.25	175.00	174.00	172.50
Сентябрь	176.00	176.75	176.25	175.00
Октябрь	179.00	179.50	178.75	177.75
Ноябрь	180.75	182.00	180.75	179.75
Декабрь	182.75	184.25	182.75	182.00

ЛОНДОНСКАЯ БИРЖА ФЬЮЧЕРСОВ И ОПЦИОНОВ (FOX)

Сахар-рафинад $/тонна				
Август	279.90	283.80	284.00	278.00
Октябрь	277.90	282.00	284.00	278.00
Март	282.80	286.30	289.00	284.60
Май	286.50	290.00	293.00	287.50
Август	293.00	298.00	300.00	294.50

УСЛОВНЫЕ ОБОЗНАЧЕНИЯ

Цена — фунтов стерлингов за тонну, если не указано иначе:
p — английских пенсов за килограмм:
c — центов за фунт:
r — (малайзийских) рингитов за килограмм:
y — август — сентябрь
u — июнь
z — июль
v — октябрь
★ — в наличии в Лондоне:
s — сиф в Роттердаме:
⊙ — цены в слитках на момент закрытия биржи:
m — малайзийских центов за килограмм:

Interface between GEM and Industry

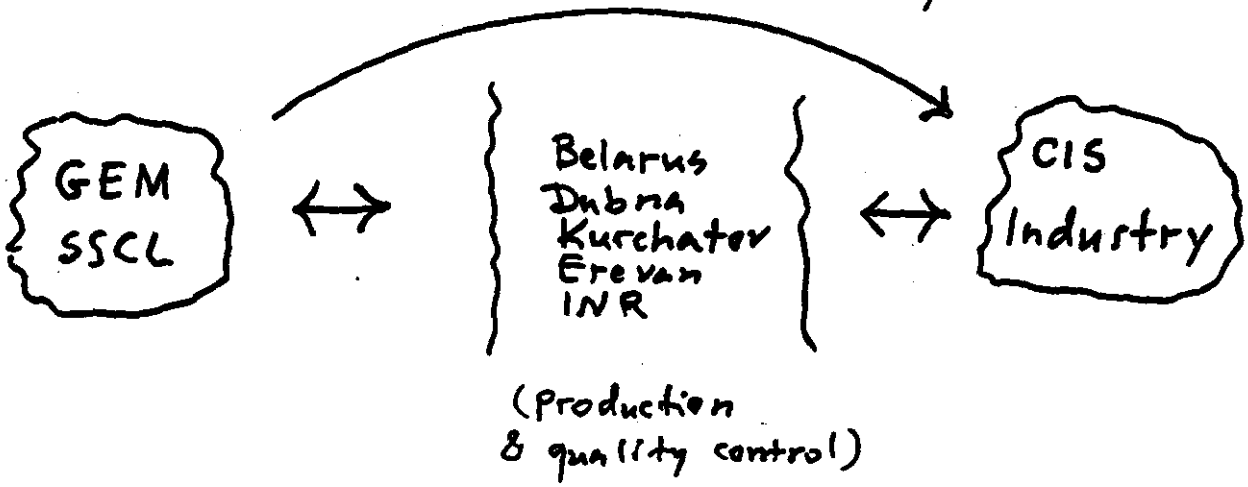

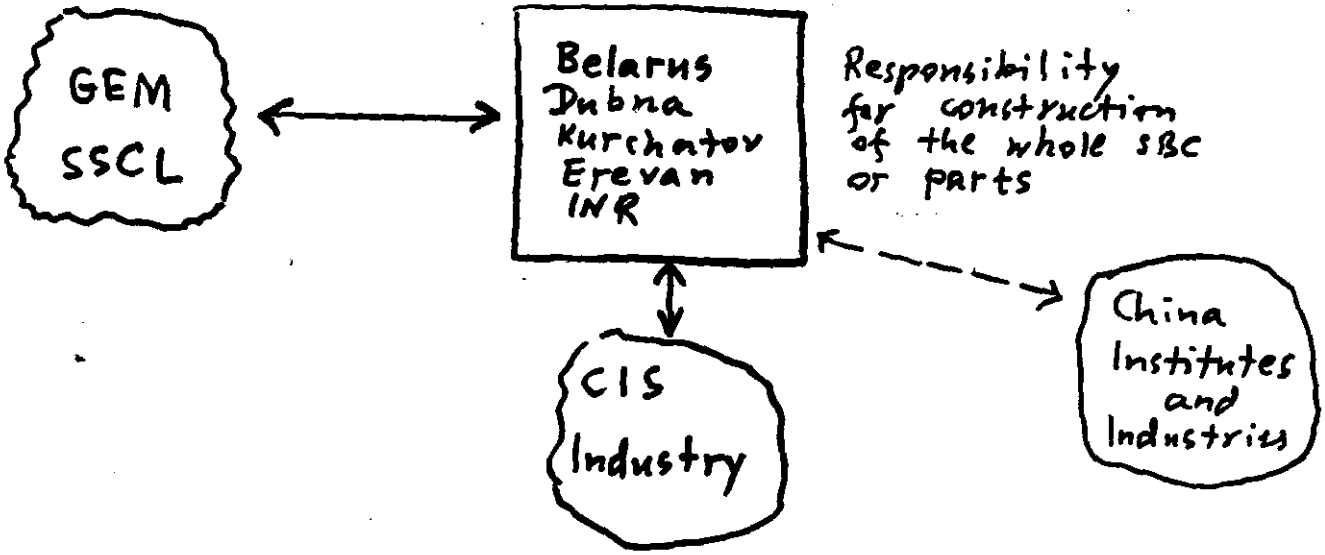

Mechanical constructions in CIS

- CDS, Passive absorber, SBC modules
- Industrial involvment
- How to garantee schedule ?
  cost ?
  quality ?

Scintillator

Tiles: 6 mm thick
~ 80-90 mm wide
~ 480-900 mm long

4 layers in 44 modules

1 module ⇒ 1/2 barrel length = 8 $\Delta\eta$ towers
2 raws of towers $\Delta\eta, \Delta\varphi = 0.16 \times 16$
1 tower ⇒ 4 layers → common readout
1 tower layer = 6 tiles

Total scint. weight : ~ $5 m^3$ or ~ 5 t
Total number of tiles : ~ 17,000

Requirements:

→ 1. Longevity !!! > 10 years no change
(it should be proven!!!)

2. High light yield, fast response ($\lesssim$ 4 ns)

3. Radiation stability 100 kRad / 10 years
10^{12} n/cm^2/ 10 years

4. Spectrum matching WLS fibers (K27)

5. Good transparency ($\lambda \gtrsim 1$ m)

? Extrusion? mold injection? grooves?
→ almost no time for development

$\boxed{\text{WLS fibers}}$ and clear fibers

- 1-2 fibers per each tile (~17,000 tiles)
- K-27 dye (?)
- Matching PMT
- Dye concentration and speed ($\lesssim$ 10 ns)

Requirements similar to scintillator.

Major concern: longevity > 10 years !!!

Other things

- PMT bases 640 (or 1280) pc
- Calibration/Monitoring system
- Quality control equipment
- Splicing machine
- Trays for scintillators
- Groove machining in tiles
- Cosmic μ acceptance stand
- Passive absorber, outer cable trays