GEM TN-93-418

GEM Test Beam Meeting at FNAL MWEST Conference Room

June 16-17, 1993

Abstract;

Agenda, attendees, and presentations of the GEM Test Beam Meeting at FNAL MWEST Conference Room on June 16-17, 1993.

GEM Test Beam Meeting at FNAL
MWEST Conference Room
JUNE 17, 1993
9:00 am – 4:00 pm

AGENDA

MWest Beamline Status	R. Tokarek
MWest Momentum Tagging	E. Engels
Status of the MWest Test Cryostat	N. Hall
Status of the MWest Cryogenics System	W. Wisniewski
Liquid Krypton Purification Tests at the SSCL	W. Wisniewski
Status of the Calorimeter Transporter	D. Spisiak
Barrel EM Test Modules	D. Lissauer
End Cap EM Test Modules	D. Lissauer, ???
Barrel Hadronic Test Modules	F. Lobkowicz
End Cap Hadronic Test Modules	~~P. Mockett~~ Vic Cook
Scintillating Calorimeter Modules	???
Central Tracker Testing	K. Morgan
Muon & Central Tracker Magnetic Field Tests	F. Stocker
Status of the MWest Decommissioning	G. Ginther

GEM Test Beam Meeting at FNAL

MWEST Conference Area

June 17, 1993

LIST OF PARTICIPANTS

Name	Institution	E-mail Address	Internet Address *[If Different]*
Vinnie Polychronakos	BNL	polychron@BNLDAG	
George Yost	SSCL	YOST@ SSCVX1	
David Lissauer	BNL	LISSAUER @ BNL. GOV	
Neil Hall	SSCL	NHALL :: SSCVX1	
Jim Dunlea	U. of Roch	DunleA@ FNAL. fnal.gov	
Kate Morgan	SSCL	Morgan @ SSCUX1	
Bill Wisniewski	SSCL	wjw @ SSCUX1	
Chris Lirakis	—	Lirakis @ FNAL. FNAL. GOV	
Jim Ellermeier	Fermi	MNDJIM @ FNALV	
Ewald Zimmer-Nixdorf	SSCL	SSCVX1 :: ZNX	
Helio Takai		takai@ bnldag. ags. bnl. gov	
Frank Stocker	SSCL	Stocker @ SSCVX1	

GEM Test Beam Meeting at FNAL

MWEST Conference Area

June 17, 1993

LIST OF PARTICIPANTS

Name	Institution	E-mail Address	Internet Address *[If Different]*
George Gunther	Univ of Rochester	Gunther @ FNALOS. FNAL. GOV	
Rich Smith	SSCL	Richards@ SSCVX1	
Gary Word	SSCL	Gary_Word@ssc-gov	
DAN SPISIAK	UNIV. OF ROCHESTER	URHEP :: SPISIAK	(716) 275-806
GREG VELASQUEZ	MARTIN MARIETTA ASTRO	VELASQUEZ @ SSCVXL SSC.GOV	
Antonio Morelos	SSCL	MORELOS @ SSCVX1.SSC.GOV	
EUGENE ENGELS	PITTSBURGH	ENGELS @ PITTUMS	
Victor Cook	U. of Washington	COOK @ PHYS. WASHINGTON. EDU	
F. LOBKOWICZ	ROCHESTER	LOBK @ URHEP. PAS. ROCHESTER. EDU	

ROGER TOKAREK

JUNE 17/93

FNALV :: TOKAREK

CENTRAL TRACKER, HIGH RATE

SLIDE (1) PROPOSED CENTRAL TRACKER LOCATION IN MW6 PRIMARY BEAM

(2) SPACE CURRENTLY AVAILABLE IN MW6. RATES AS LOW AS FEW E7 ?? H's ? AREA CAN BE RE-CONFIGURED.

RADIATION RATES IN MW9 EXPERIMENTAL HALL

(3) MW9 HALL (OLD; E706 LAYOUT)

(4) ACCIDENT CONDITION CALCULATIONS — SHIELDING REQUIRED IN MW9

(5) FERMILAB RAD GUIDE - ACCIDENT CONDITION CATEGORIES — TABLE 2-6B

(6) NORMAL OPERATING LOSS ~~CO~~ CALCULATION IN MW9. IMPACT ON BEAM RATE + SHIELDING REQUIRED

(7) FERMILAB RAD GUIDE - NORMAL OPERATING LOSS ~~CO~~ CATEGORIES — TABLE 2-5.

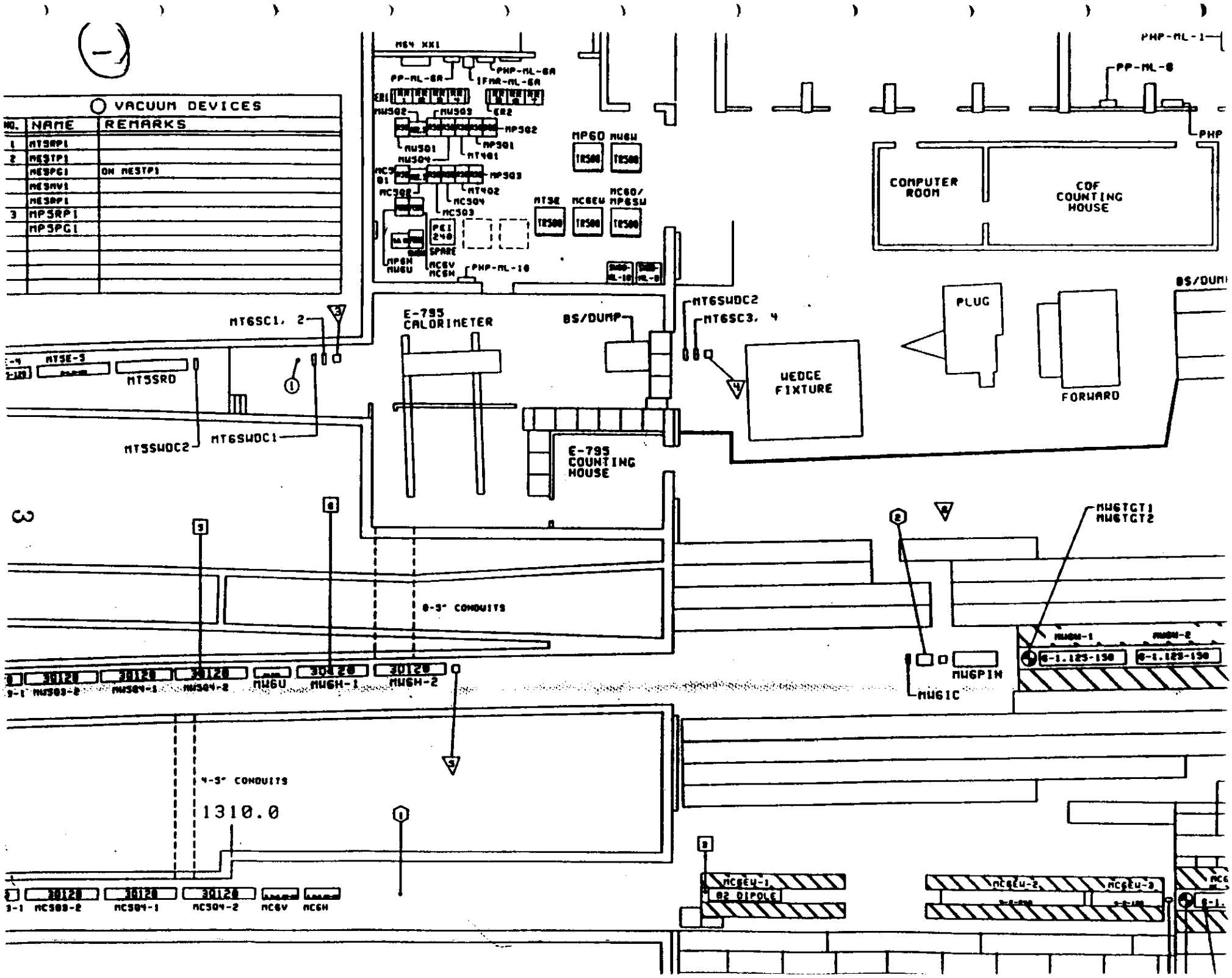
VACUUM DEVICES
NO. NAME REMARKS
1 MT5RP1
2 MESTP1
MESPG1 ON MESTP1
MESNV1
MESRP1
3 MP5RP1
MP5PG1
COMPUTER ROOM
CDF COUNTING HOUSE
E-795 CALORIMETER
BS/DUMP
MT6SWDC2
MT6SC3, 4
MT6SC1, 2
WEDGE FIXTURE
PLUG
FORWARD
MT5RD
MT5SWDC2
MT6SWDC1
E-795 COUNTING HOUSE
MW6TGT1
MW6TGT2
8-3" CONDUITS
4-3" CONDUITS
1310.0
MW6U
MW6H-1
MW6H-2
MW6PIN
MW6IC
MC6EU-1
B2 DIPOLE
MC6EU-2
MC6EU-3
MC6V
MC6H

MW6 - PRE-TARGET

June 16, 1993
RLT

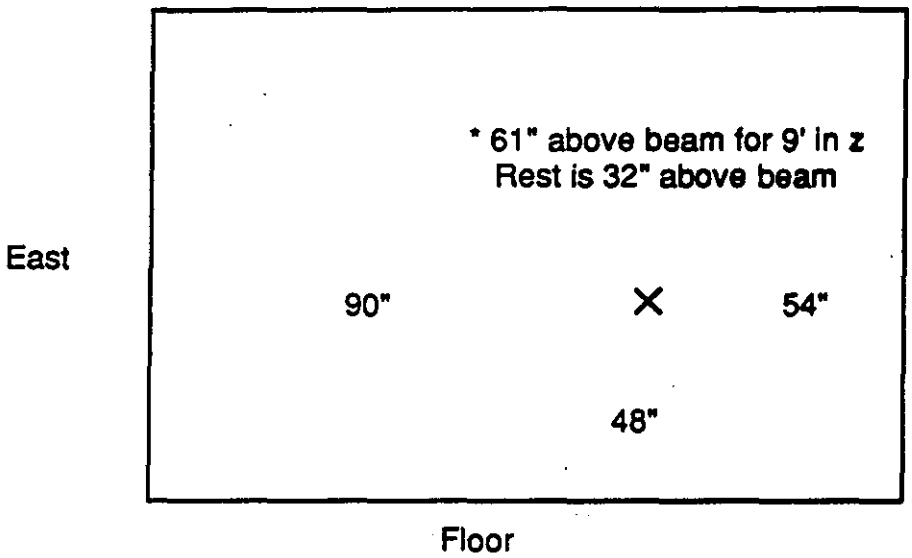

* Could gain 3' in height

Beam rate to 1E 11 / second
as low as ??, muon contribution?

(2)

(3)

The Fermilab MWEST Area – *Not Drawn to Scale*

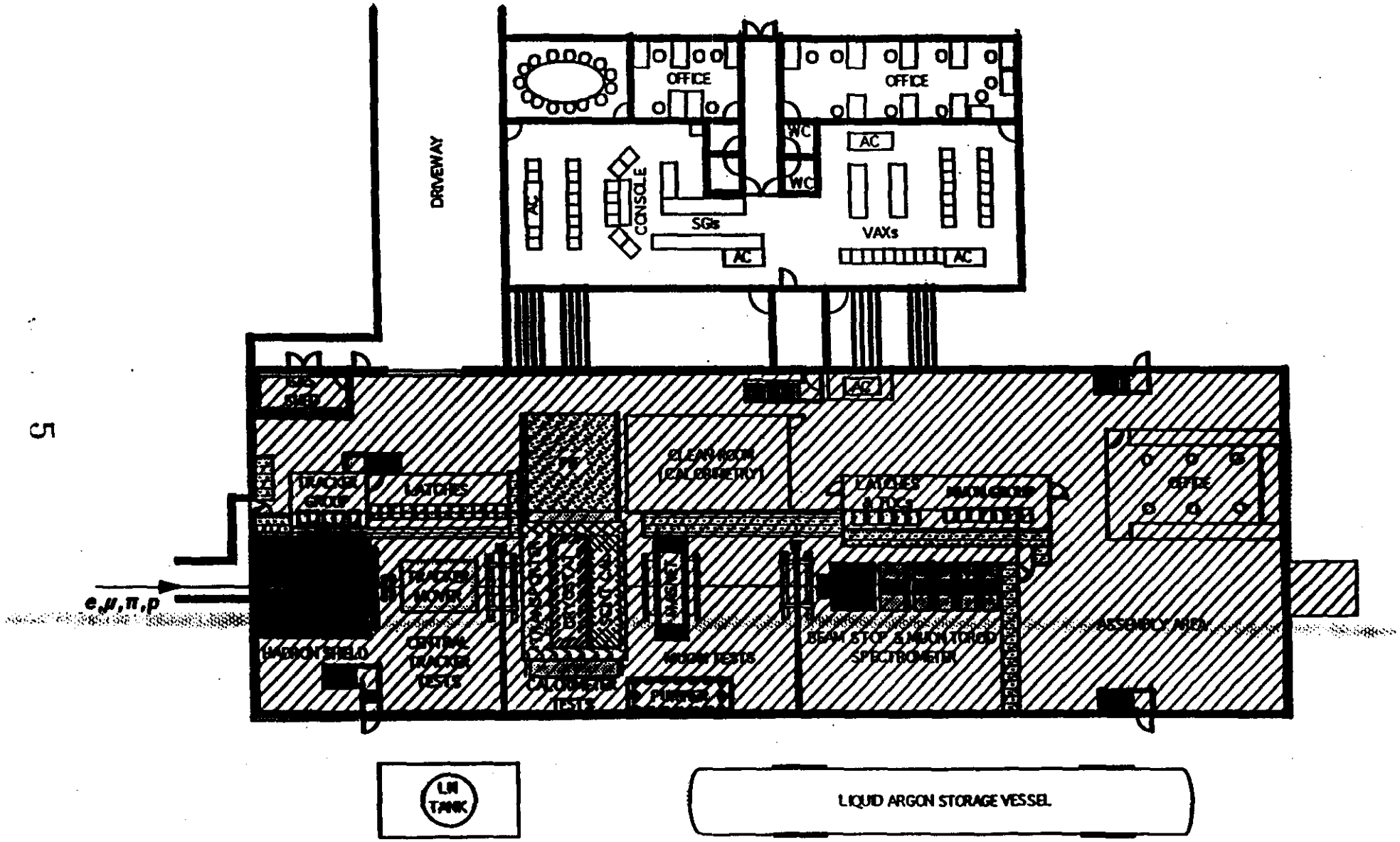

(4)

GEM, MW9 Predicted Radiation

3E13 Accident Condition
600 GeV Positive Secondaries

R. Tokarek 6/9/93

Area Description	Distance from Beamline (feet)		Concrete Shielding (feet)	A (mr/pulse)	B (mr/pulse)	Reference Number	Table Max Allowable (mr/pulse)
US & DS Latch House	11	West	0	170.0	278.8	5	< 250 *
	11	West	3	12.1	19.8	4	< 50
	11	West	4.5	3.3	5.4	3	<10
	11	West	6	0.8	1.3	2	< 2.5
Roll Up Door	40	West	3	0.8	1.4	2	< 2.5
	40	West	6	0.1	0.1	1	< 0.25
Counting House	55	West	6	0.0	0.1	1	< 0.25
East Wall, Blocks Outside	32	East	3	1.4	2.3	2	< 2.5

A: 800 GeV primary beam
B: 900 GeV primary beam

* Interlocked gates required

Table 2-6A Control of Outdoor Accelerator/Beamline Areas Against Accident Radiation Levels: Radiation Interlocks not Used

Maximum Dose/in One Hour (D)	Level of Precaution
D < 1 mrem	No precaution needed, no occupancy limit
1 ≤ D < 10 mrem	No precaution needed, area must have minimal occupancy
10 ≤ D < 100 mrem	Signs ("radiation area")with chains and/or fencing to define the perimeter, area must have minimal occupancy. (On a temporary basis, ropes may be used in place of chains.)
100 ≤ D < 500 mrem	Signs ("high radiation area") and fences with locked gates. Access by authorized personnel only
500 ≤ D < 1000 mrem	Signs ("high radiation area") and fences with interlocked gates and visible flashing lights warning of the hazard. Fences with no gates are a permitted alternate. No beam-on access permitted.
D ≥ 1000 mrem	Not permitted

REFERENCE NUMBER

Table 2-6B Control of Outdoor Accelerator/Beamline Areas Against Accident Radiation Levels: Radiation Interlocks Used

	Maximum Dose/Interlock Trip (mrem) and Maximum Allowed Dose in One Hour (mrem/hr) limited by the Number of trips Permitted.	Level of Precaution
1	D < 0.25 mrem and D ≤ 1 mrem/hr	No precaution needed, no occupancy limit
2	0.25 ≤ D < 2.5 mrem and D ≤ 10 mrem/hr	No precaution needed, area must have minimal occupancy
3	2.5 ≤ D < 10 mrem and D ≤ 100 mrem/hr	Signs ("radiation area") with chains and/or fencing to define the perimeter, minimal occupancy (on a temporary basis ropes may be used in place of chains)
4	10 ≤ D < 50 mrem and D ≤ 500 mrem/hr	Signs ("high radiation area") and fences with locked gates. Access by authorized personnel only.
	50 ≤ D < 250 mrem and D ≤ 1000 mrem/hr	Signs ("high radiation area"), 8 ft. high fences with locked gates whose gate keys are interlocked. Fences with no gates are a permitted alternate. No beam-on access permitted.
	D ≥ 250 mrem	See Article 238.4 (Special Circumstances)

5

Normal, Operating Loss
600 GeV Positive Secondaries

R. Tokarek 6/9/93

Area Description	Distance from Beamline (feet)	Concrete Shielding (feet)	1E8 in MW9 (mr/hour)	Reference Number	Table Max Allowable (mr/pulse)	1E7 in MW9 (mr/hour)
US & DS Latch House	11 West	0	344.0	5	< 250 *	34.4
	11 West	3	24.2	4	< 100	2.4
	11 West	4.5	6.4	3	< 10	0.6
	11 West	6	1.7	2	< 2.5	0.2
Roll Up Door	40 West	3	1.8	2	< 2.5	0.2
	40 West	6	0.1	1	< 0.25	0.0
Counting House	55 West	6	0.1	1	< 0.25	0.0
East Wall, Blocks Outside	32 East	3	2.9	3	< 10	0.3

* Interlocked gates required

TABLE 2-5 Control of Outdoor Accelerator/Beamline Areas Against "Normal" Radiation Levels

REFERENCE NUMBER	Dose Rate (DR)	Level of Precaution
	DR < 0.025	No precaution needed, no occupancy limit
1	0.025 < DR < ~~2.5~~ 0.25	Signs, ("Caution-Radiologically controlled Area") - no occupancy limit
2	0.25 ≤ DR < 2.5 mrem/hr	Signs, ("Caution-Radiologically controlled Area") - minimal occupancy
3	2.5 ≤ DR < 10 mrem/hr	Signs with chains and/or fencing to define the perimeter ("radiation area"), area must have minimal occupancy. (On a temporary basis, ropes may be substituted for fences/chains.)
4	10 ≤ DR < 100 mrem/hr	Signs ("radiation area") and fences with locked gates. For beam-on radiation, access is restricted to authorized personnel only.
	100 ≤ DR < 250 mrem/hr	Signs ("high radiation area"), 8 ft. high fences with locked gates the keys to which are interlocked. Fences with no gates are a permitted alternate. No beam-on access permitted.
	250 ≤ DR < 1000 mrem/hr	Signs ("high radiation area"), 8 ft. high fences with locked and interlocked gates and visible flashing lights warning of the hazard. No beam-on access permitted.
	DR ≥ 1000 mrem/hr	Not permitted

3. Posting Requirements for Outdoor Accelerator/Beamline Areas Under Accident Conditions

   a. The requirements of Tables 2-6A and 2-6B apply to the posting, access control, and limitation of maximum dose which could be delivered in one hour under accident conditions in all outdoor accelerator/beamline radiation areas. Table 2-6A addresses situations where radiation interlocks are not used to limit such accident conditions. Table 2-6B addresses situations in which radiation activated interlocks (e.g., chipmunks) are used to limit such excursions from normal operating conditions.

   b. Table 2-6A addresses control for access to areas which are not protected by radiation activated interlocks. In these areas the maximum dose is usually considered to be that which can be delivered by the maximum possible beam power loss (see below) for one hour at the worst location for that given area.

   c. In some cases, it may be very unlikely or even impossible to lose the maximum possible beam power for such a long period as one hour.

      (1) In those cases, shielding may be designed and commissioned using a smaller than maximum beam power loss provided an adequate hazard analysis is performed and the design is approved by the appropriate Department and Division Head(s).

7

BEAM MOMENTUM SPECTROMETER

E. ENGELS

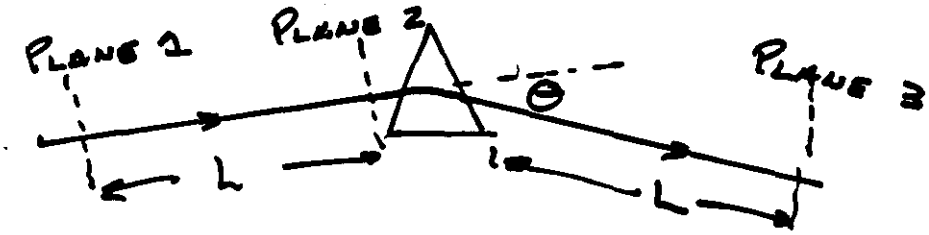

$$\Delta P/P = \frac{1}{L\theta}\sqrt{6\,\sigma_x^2} = 0.1\%$$

$\sigma_x = 7.2\,\mu m$ FOR $25\,\mu m$ PITCH

$\theta = 4.8$ mR. GIVES $L = 3.7$ m.

FROM E706 EXPERIENCE:

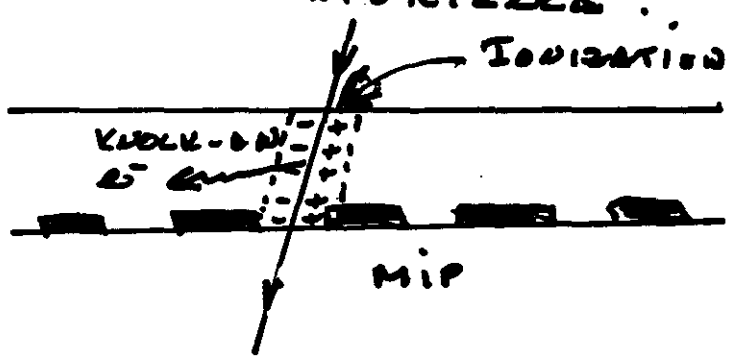

MEANS, FOR $25\,\mu m$ PITCH, $\frac{\text{DOUBLE HITS}}{\text{SINGLE HITS}} = 40\%$

PROBABILITY OF SINGLE HITS IN THREE PLANES $= 0.21$!

MEANS THAT FOR $25\,\mu m$ PITCH, $0.1\% \le \frac{\Delta P}{P} \le 0.2\%$

" " " $50\,\mu m$ PITCH, $0.2\% \le \frac{\Delta P}{P} \le 0.4\%$

(THE ABOVE ASSUMES DIGITAL READOUT) FOR SAME L.

(2)

93/06/17 08.34

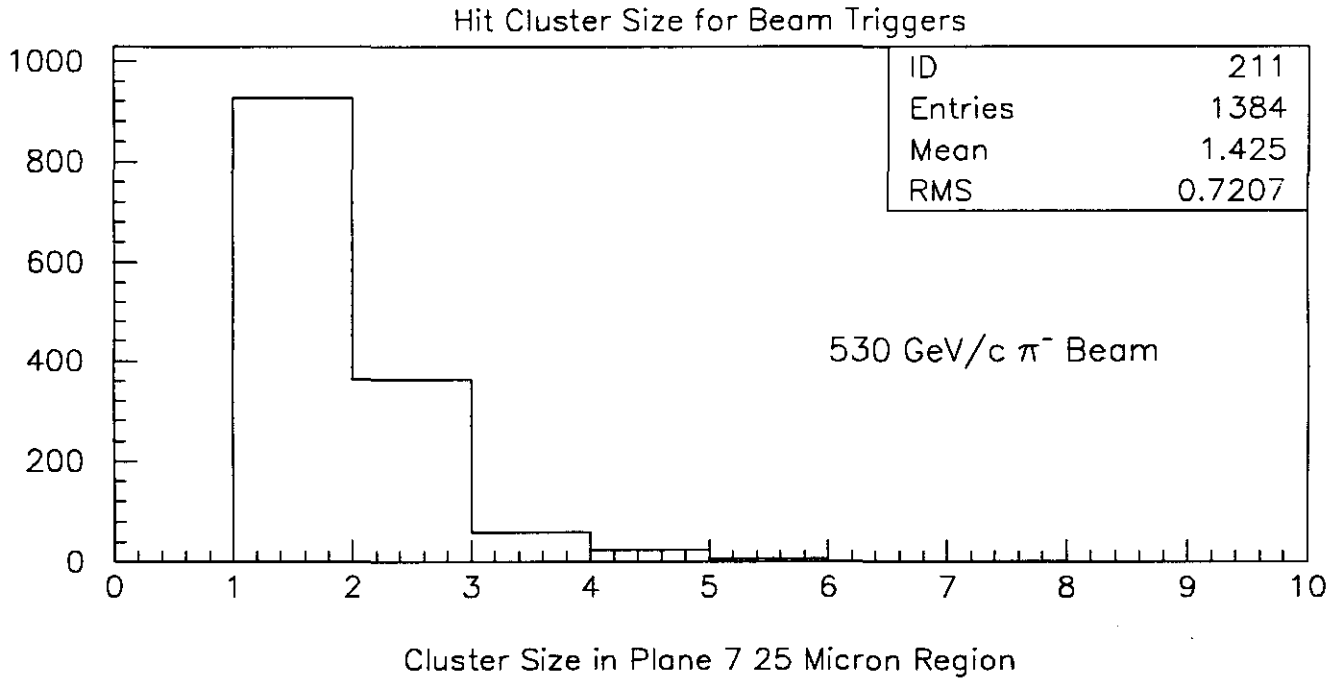

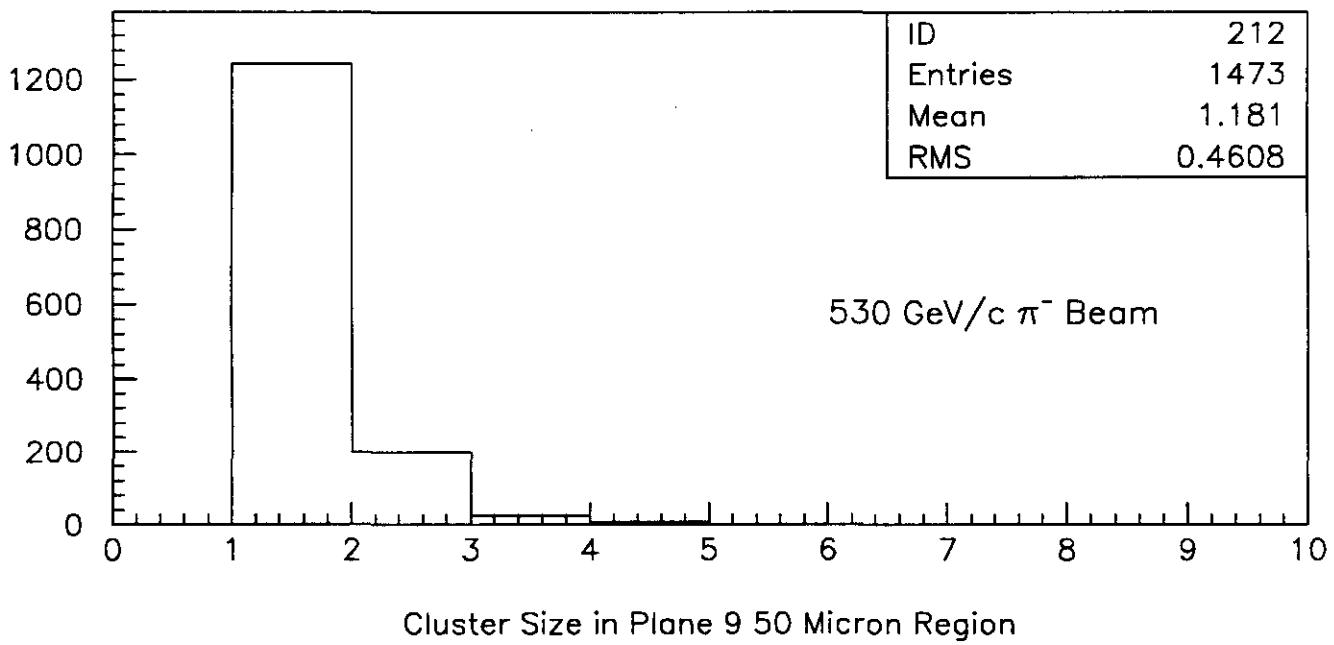

E 706 SILICON SYSTEM

WORK IN PROGRESS:

DISMANTLE CURRENT SYSTEM BY AUGUST 30

CHECK CONDITION OF PRESENT WAFERS
BY MEASURING LEAKAGE CURRENT OF
9,000 CHANNELS BY JULY 31

WE CURRENTLY HAVE:

3 WAFERS - 384 25μm LINES
304 50μm LINES

14 WAFERS - 1,000 - 50μm LINES

EVERY LINE IS READ OUT.

MICRON-SEMICONDUCTOR (COLIN WILBURN)
CAN NO LONGER FABRICATE 25μm WAFER
CAPTON PC BOARDS --- WILL REPLACE
WAFERS AND REFURBISH USED DETECTORS.

READ OUT DESIGN (S. MANI)

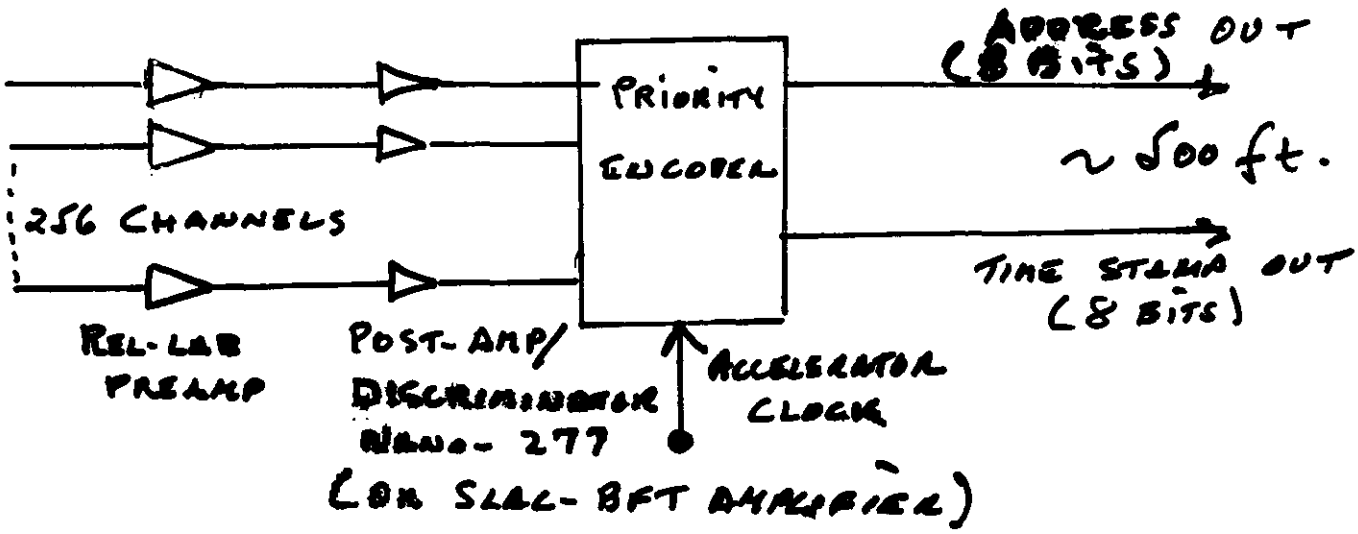

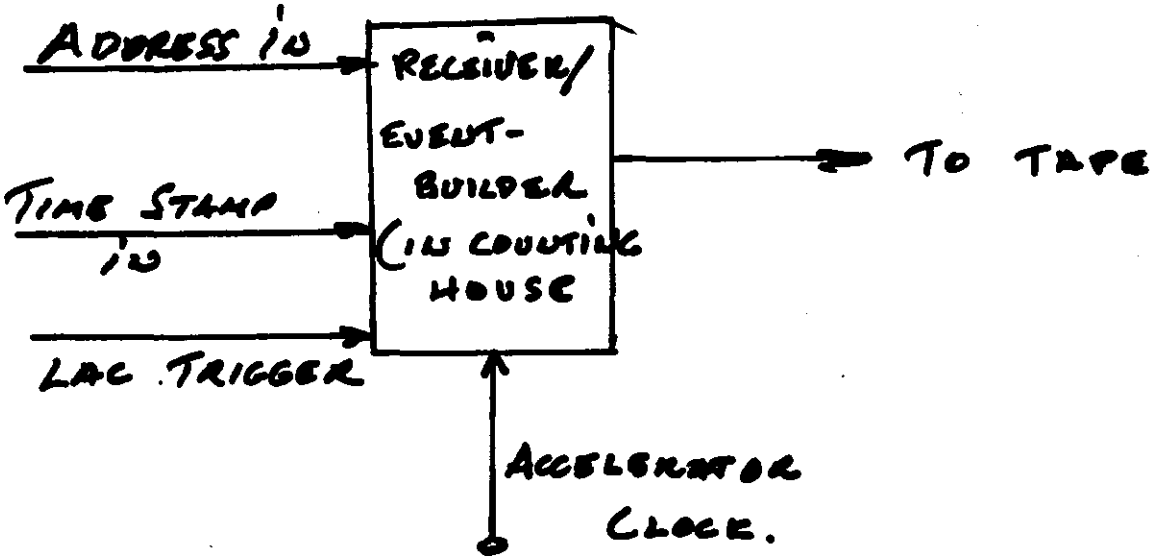

GEM TEST BEAM CRYOSTAT STATUS

FNAL MEETING 6/17/93

Neil Hall - SSCL
(214) 708-6180

GEM TEST BEAM CRYOSTAT
MODULE CONFIGURATION

- CONFIGURATION CHANGED SINCE 4/22/93 FNAL MEETING
  - NUMBER OF BARREL INNER HADRON MODULES CHANGED FROM 8 TO 6
  - BARREL EM ROTATED 2.25° CCW
  - END CAP OUTER HAD's A & B HAVE SAME CLOCKING
  - END CAP INNER HAD's A & B HAVE SAME CLOCKING AND ARE CENTERED WITH CRACK 1
- REQUIREMENT IS TO PROVIDE ROLL OF ± 4.0°. THIS ALLOWS BEAM TO FAN 1.75° BEYOND CRACKS 1 & 2

Neil Hall, SSCL - (214)708-6180
June 16, 1993

GEM TEST BEAM CRYOSTAT MODULE ARRANGEMENT

Rev: 6/11/93

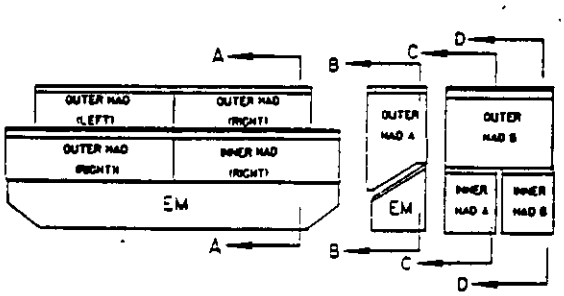

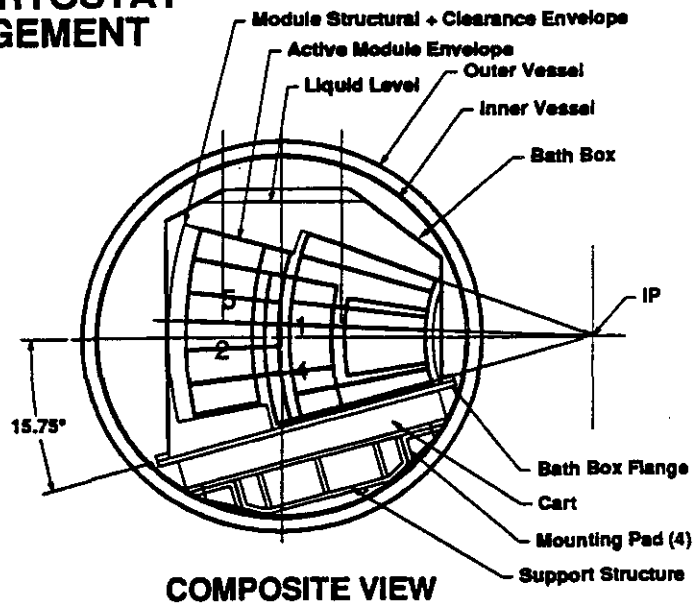

COMPOSITE VIEW
ROTATED 90°

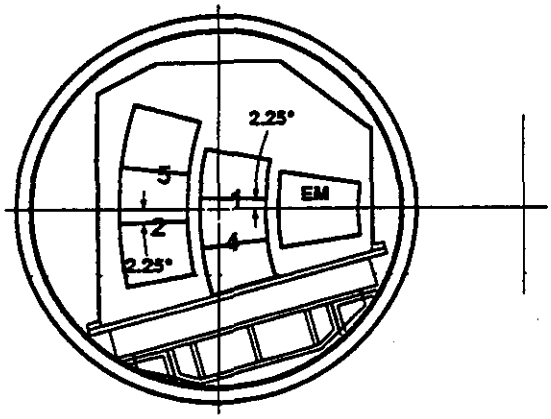

SECTION A-A (BARREL)
ROTATED 90°

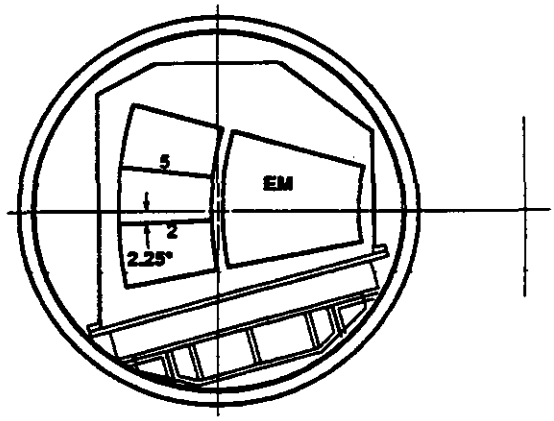

SECTION B-B (ENDCAP)
ROTATED 90°

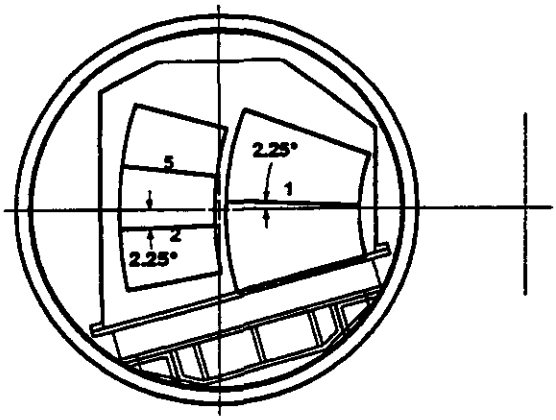

SECTION C-C (ENDCAP)
ROTATED 90°

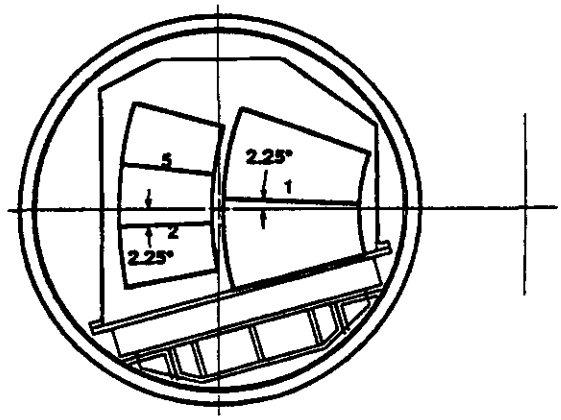

SECTION D-D (ENDCAP)
ROTATED 90°

GEM Test Beam Cryostat
Module Configuration
Rev: 6/11/93

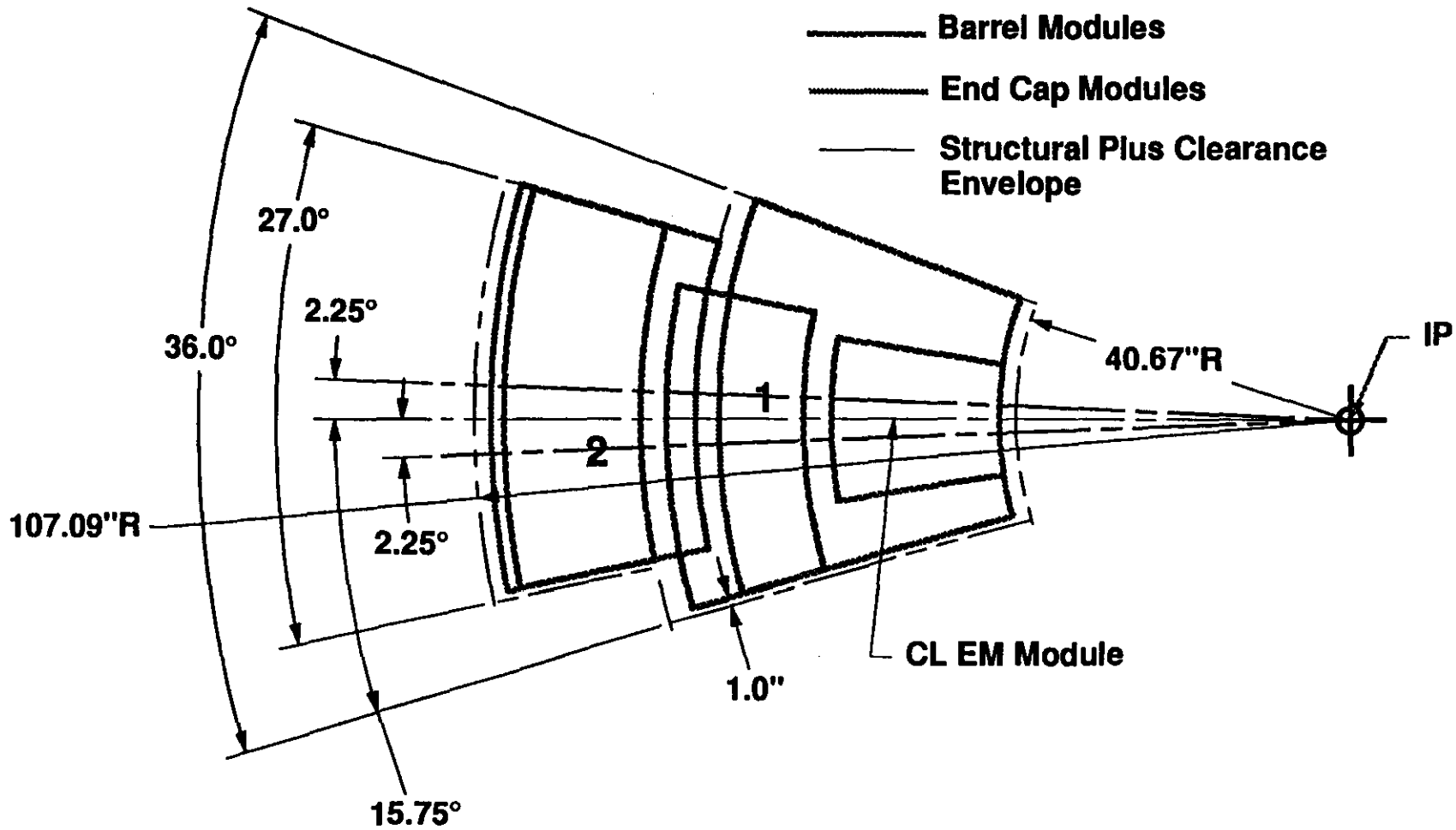

GEM TEST BEAM CRYOSTAT
VESSEL DESIGN STATUS

- BOLTED FLANGE WILL BE USED INSTEAD OF WELDED FLANGE
- WINDOW WILL BE ADDED ON BEAM SIDE OF CRYOSTAT
  - √ WINDOW THICKNESS WILL BE MINIMIZED
  - √ FRONT WALL OF BATH BOX WILL BE THINNED SO THAT SUM OF WINDOWS PLUS BATH BOX ARE EQUAL TO SUM OF GEM CRYOSTAT INNER AND OUTER VESSELS (i.e., 1.30 in)
- NO WINDOW AT REAR OF CRYOSTAT NOR WILL BATH BOX WALL BE THINNED
- CRYOSTAT WILL BE DESIGNED FOR .05 g's SEISMIC LOAD. DALLAS AND CHICAGO IN ZERO EARTHQUAKE ZONE
- FLAT PATTERN OF VESSEL PENETRATIONS HAS BEEN DEVELOPED
  - MAJORITY OF PENETRATIONS WILL REQUIRE ACCESS FOR HOOK-UP PRIOR TO VESSEL CLOSE-OUT.
- VESSEL DIAMETER CURRENTLY 102.5". EFFORT UNDERWAY TO REDUCE.
- VESSEL LENGTH CURRENTLY 310" T0 315".
  - √ DISTANCE BETWEEN SOUTH BLOCKHOUSE AND CONCRETE WALL IS 329". ALLOWS 7" CLEARANCE EACH END OF VESSEL.
  - √ VESSEL PROBABLY CANT BE MOVED THROUGH DOOR. ALTERNATIVES SHOULD BE INVESTIGATED.

Neil Hall, SSCL - (214)708-6180
June 16, 1993

Cryostat Outer Vessel Flat Pattern
(Heads Not Shown)

Rev: 6/15/93

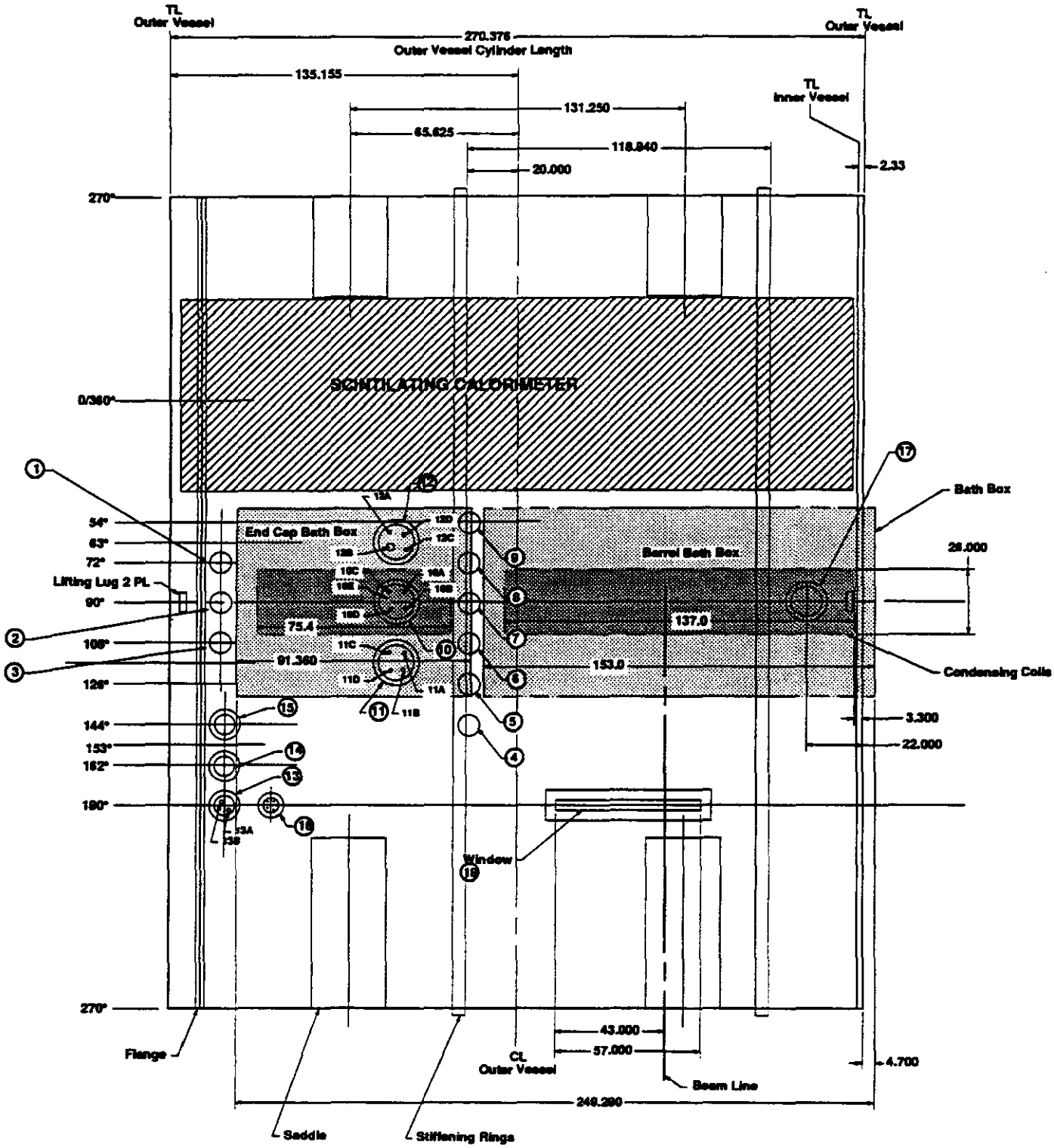

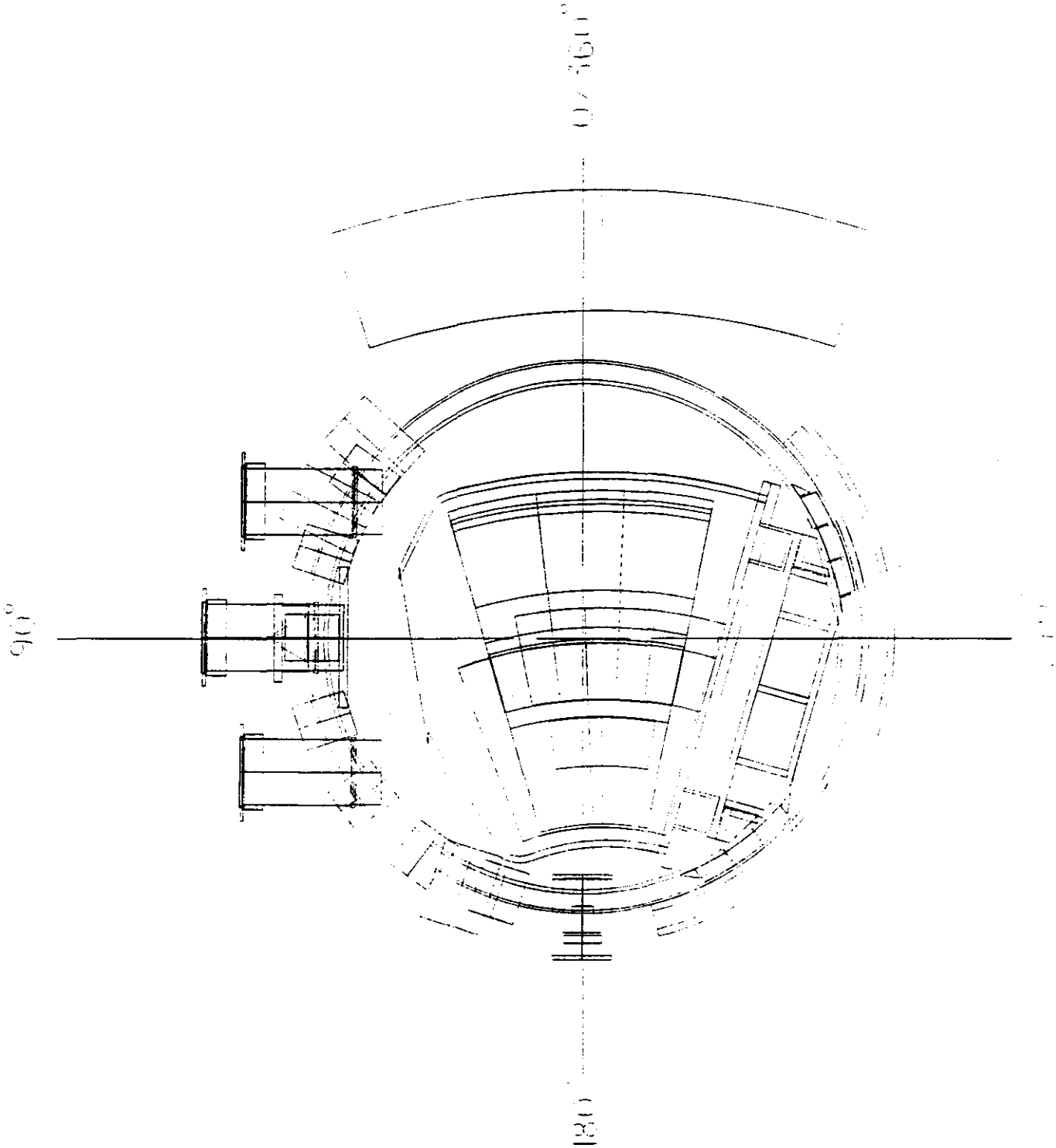
0 / 360°
90°
180°

Individual Penetration Definition
Rev 6/15/93

Description	Qty	IPS or Size, in	Penetration No.	Route Thru Penetration No.	Hook-up Required Upon Vessel Close-out?	Penetrate Thru both Vessels?	Bayonet Required?	Other
End Cap Module feedthrus for: a. Signal Cables b. Power Cables (4 conductor, 460 Volt, TBD amps) c. High Voltage Cables	3	8.5	1-3	1-3	Yes	Yes	No	Double block type, 12 connectors per block, 32 pins per connector (ea feedthru=768 channels) 1 27° EC EM seg @ TBD channels 10 EC Hads @ TBD channels
Barrel Module feedthrus for: a. Signal Cables b. Power Cables (4 conductor, 460 Volt, TBD amps) c. High Voltage Cables	6	8.5	4-9	4-9	Yes	Yes	No	Double block type, 12 connectors per block, 32 pins per connector (ea feedthru=768 channels) 2 Barrel EMs @ TBD channels 12 Barrel Hads @ TBD Channels
LN2 inlet to condensing coils - Barrel	1	1.5	10A	10	No	Yes	Yes	
LN2 outlet to condensing coils - Barrel	1	1.5	10B	10	No	Yes	Yes	
LN2 inlet to condensing coils - End Cap	1	1.5	10C	10	No	Yes	Yes	
LN2 outlet for condensing coils - End Cap	1	1.5	10D	10	No	Yes	Yes	
Ar/Kr Pressure Tap	1	0.25	10E	10	No	Yes	No	
LAr/LKr Drain Line/Liquid Sample	1	1.5	11A	11	Yes	Yes	Yes	Route to bottom of Barrel Box. For Tracking Purity/quick drain
LAr/LKr fill line	1	1.5	11B	11	Yes	Yes	Yes	Stub above Barrel Box
LAr inlet for internal module cooling	1	1.5	11C	11	Yes	Yes	Yes	
LAr inlet for internal module cooling	1	1.5	11D	11	Yes	Yes	Yes	

N. Nalll - SSCL
Rev: June 16, 1993

Individual Penetration Definition (Cont.)

Description	Qty	Size, in	Penetration No.	Route Thru Penetration No.	Hook-up Required Upon Vessel Close-out?	Penetrate Thru both Vessels?	Bayonet Required?	
Auxiliary Cryo 1	1	1.0	12A	12	Yes	Yes	No	
Auxiliary Cryo 2	1	3.0	12B	12	Yes	Yes	No	
GAr/GKr Vapor Inlet/Return	1	3.0	12C	12	No	Yes	Yes	Stub to inside of vessel
Liquid level indicator	1	.50	12D	12	Yes	Yes	No	Group of 4 or 5 wires feed through .50 pass-thru
LN2 inlet to heat intercepts	1	1.5	13A	13	No	Yes	Yes	Bayonets are in horizontal position. Would be better if they were vertical
LN2 outlet to heat intercepts	1	1.5	13B	13	No	Yes	Yes	Bayonets are in horizontal position. Would be better if they were vertical
Vacuum Pump out - Inner vessel	1	8.0	14A	14	No	Yes	No	Vacuum pump-out and Relief line tee off of same penetration
Inner vessel pressure relief line	1	6.0	14B	14	No	Yes	No	Vacuum pump-out and Relief line tee off of same penetration
Vacuum Pump out - annular cavity	1	8.0	15A	15	No	No	No	
Inner Vessel flange vacuum pump out port	1	0.25	15B	15	No	No	No	
High Voltage Feedthru for Strip Heater at 4 sides and bottom of bath box, 1/8" dia wire, 460 volt	5	.50	16	16	Yes	Yes	No	No bellows here, so penetration can be located towards rear of vessel if necessary but will need extension cord.
Outer Vessel Pressure relief Valve	1	12.0	17	17	No	No	No	
Window			18	18	No	Yes	No	

N. Nalll - SSCL
Rev: June 16, 1993

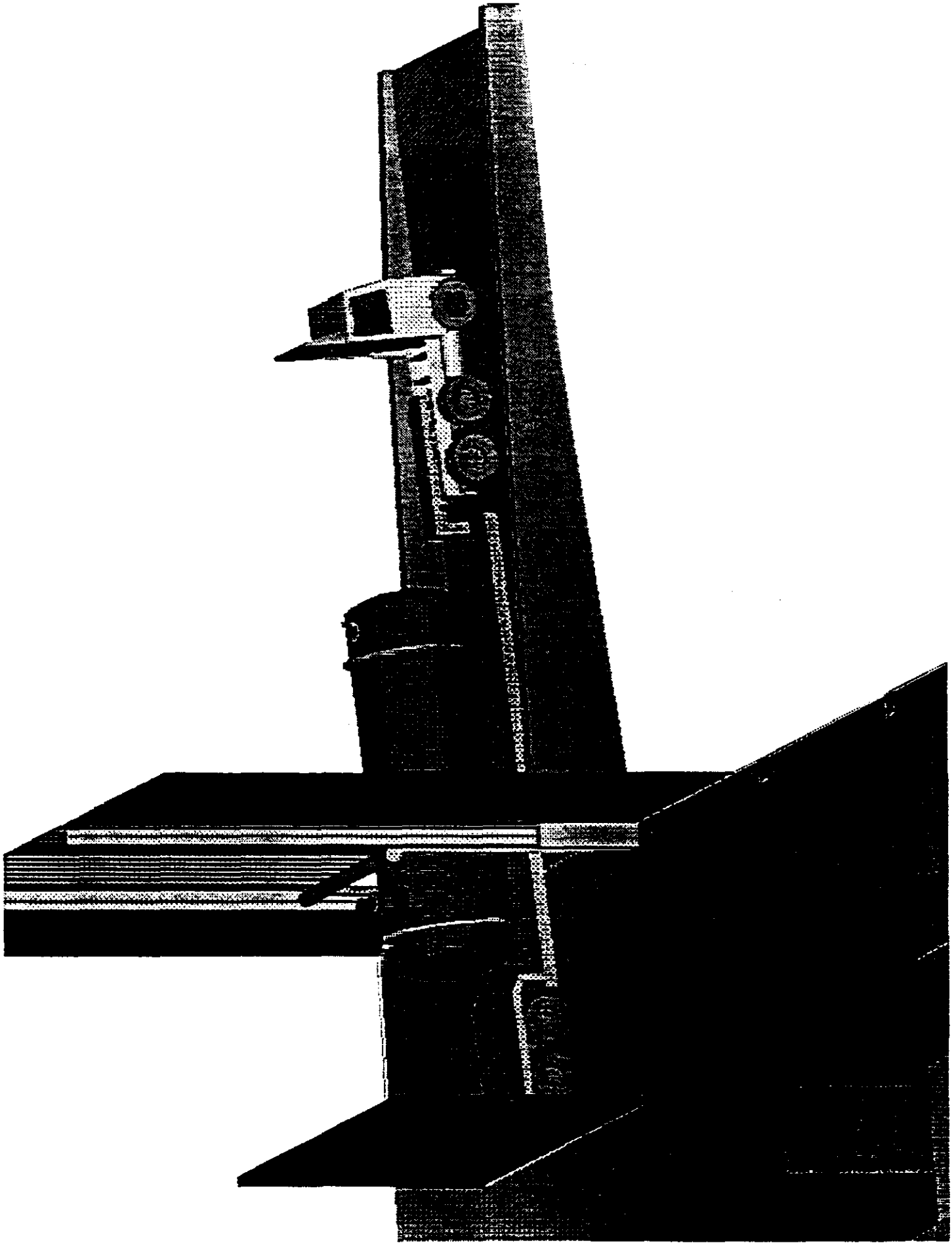

GEM TEST BEAM CRYOSTAT
SADDLE ANALYSIS

- **SIMPLIFIED ANALYSIS COMPLETED**

Dimension	Case 1	Case 2	Case 3
A , in	6	5	4
B , in	0.875	1	N.A.
C , in	0.875	1	N.A.
Inertia, in^4	400	303	220
Stress, psi	7400	8000	9000

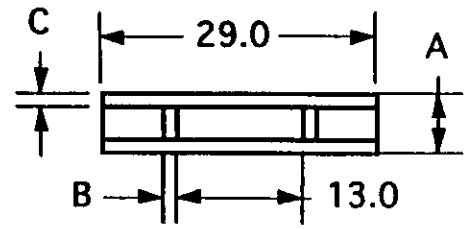

Beam X-section

- **SADDLE MATERIAL IS ALUMINUM 5083-O – ALLOWABLE STRESS 10 KSI**
- **FACTORS NOT CONSIDERED IN ANALYSIS:**
  - **LOCAL DEFORMATION OF BEAM AT ROLLERS**
  - **EFFECT OF DEFORMATION OF ROLLERS ON REACTION FORCES**
  - **INNER VESSEL AND SUPPORT STRUCTURE CONSIDERED RIGID**

Neil Hall, SSCL - (214)708-6180
June 16, 1993

GEM TEST BEAM CRYOSTAT
BATH BOX DESIGN STATUS

- BATH BOX TO BE DESIGNED AS TWO SEPARATE BOXES. EACH BOX INDIVIDUALLY INSERTABLE
- NO LINKAGE BETWEEN BOXES. EACH BOX TIED TO INNER VESSEL AT FRONT END OF BOX
- CRYOSTAT WILL BE DESIGNED FOR TWO LOADING SCENARIOS
  1. LKr IN BARREL BOX. NO CRYOGEN IN ENDCAP BOX. ALL MODULES IN BOTH BOXES
  2. LAr IN BOTH BOXES. ALL MODULES IN BOTH BOXES
- WALL THICKNESS OF BATH BOX IS 1.25" WITH LOCAL THINNING AS NECESSARY IN AREA OF THE BEAM
- LIQUID EXCLUDERS IN BARREL BOX ONLY
- BATH BOX DESIGN MUST CONSIDER MODULE INSTALLATION
  - ALL HADRON MODULES ARE MOUNTED ON RADIAL KEYWAYS
    - √ REQUIRES INSTALLATION FROM HORIZONTAL DIRECTION
    - √ SMALL END OF MODULE MUST LEAD DURING INSERTION
  - CURRENT MODULE ORIENTATION MAY CAUSE INSTALLATION DIFFICULTIES

Neil Hall, SSCL - (214)708-8180
June 16, 1993

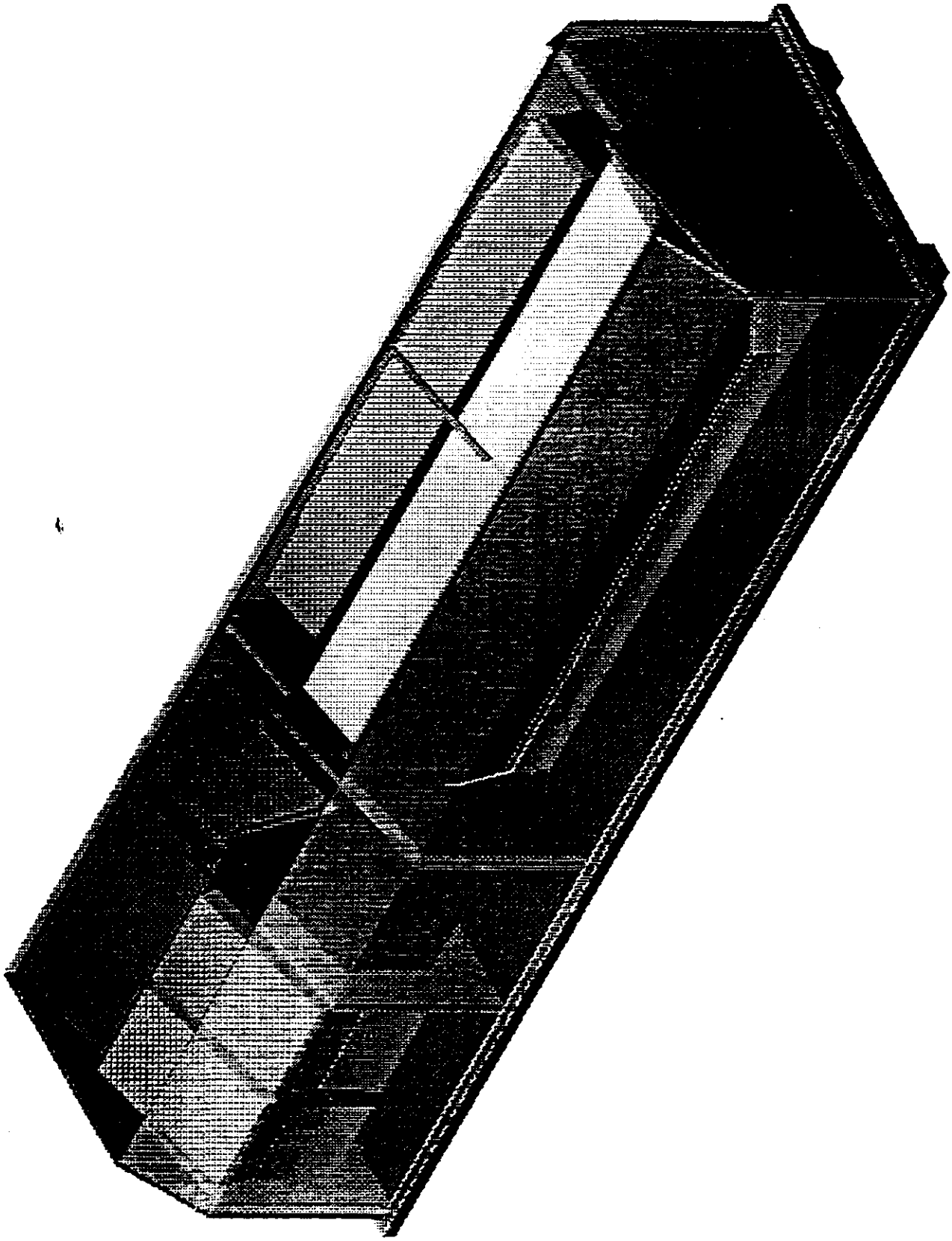

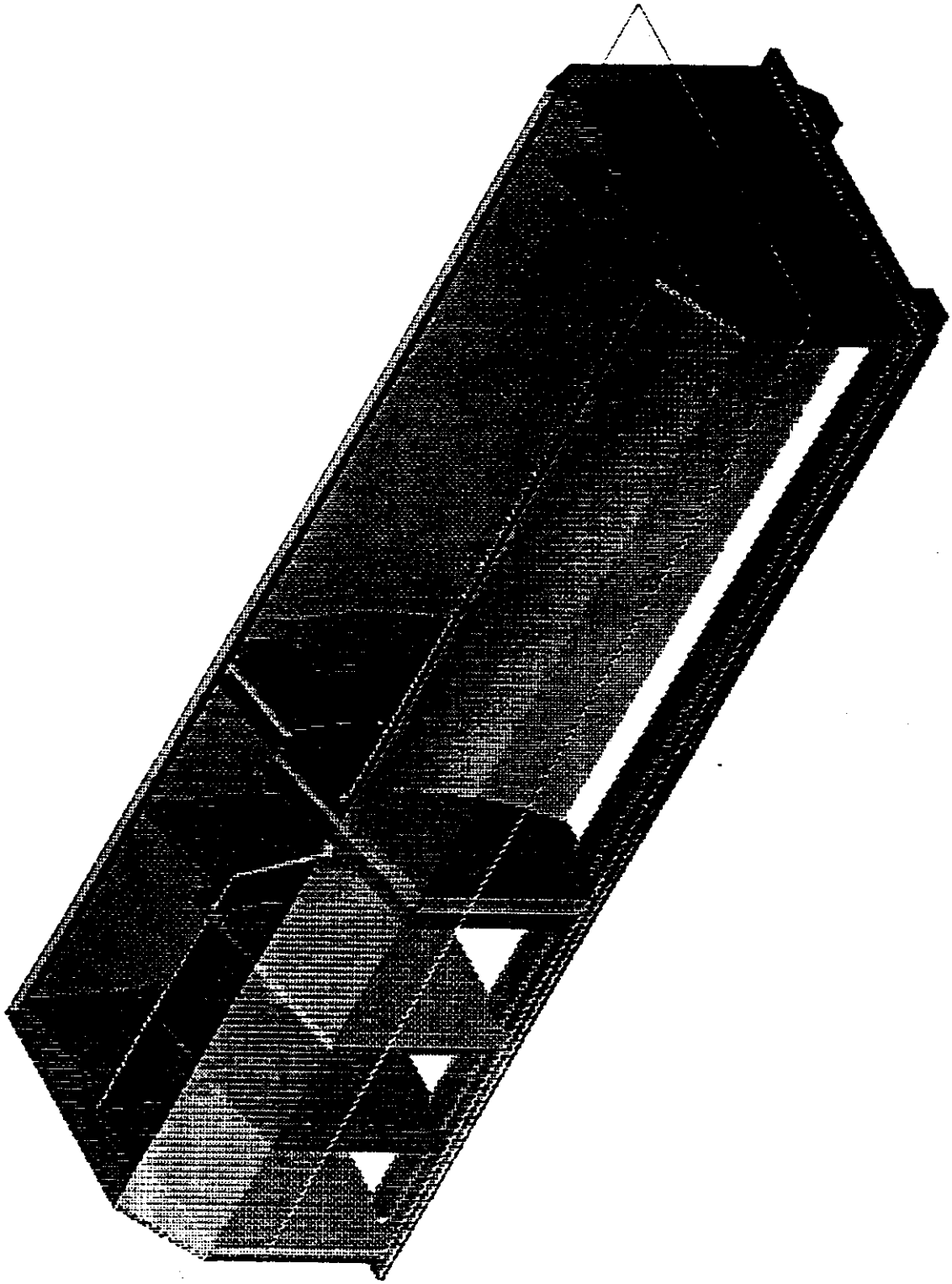

Bath Box Concept

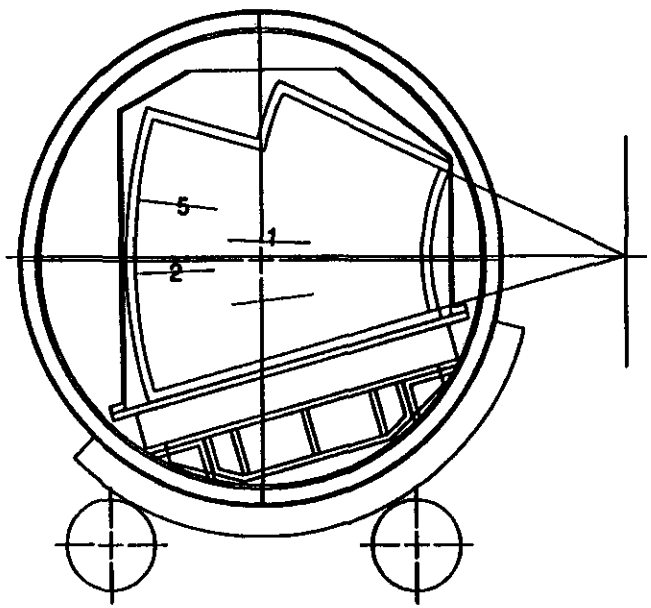

Operating Position

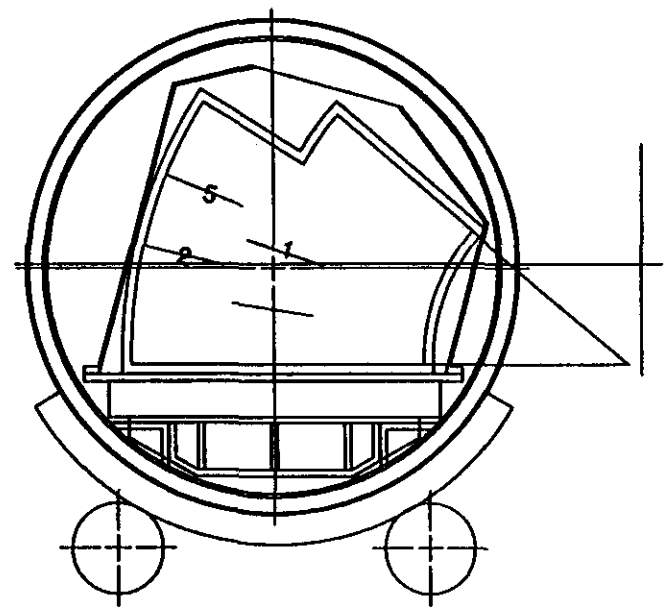

Loading Position

BATH BOX CONCEPT

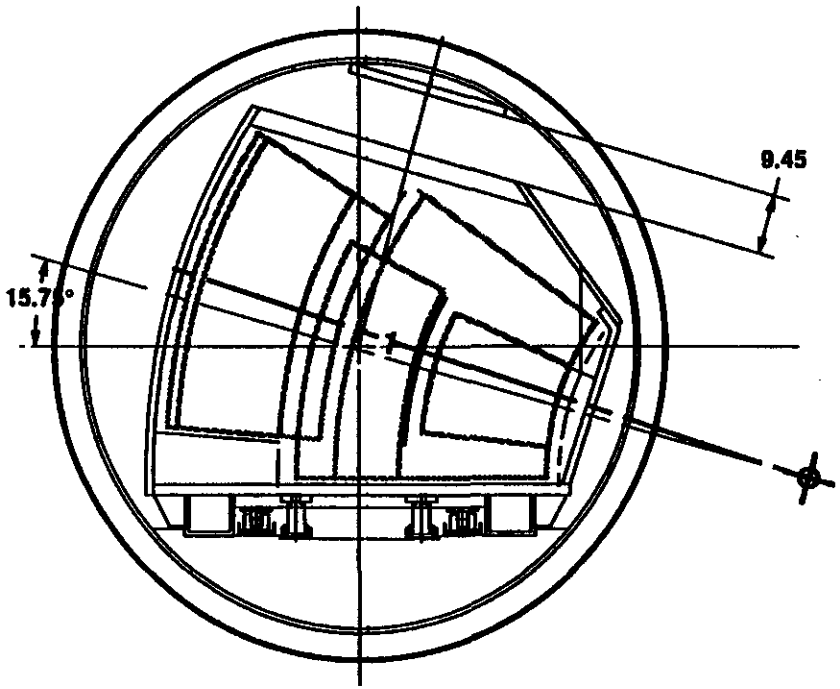

LOADING POSITION

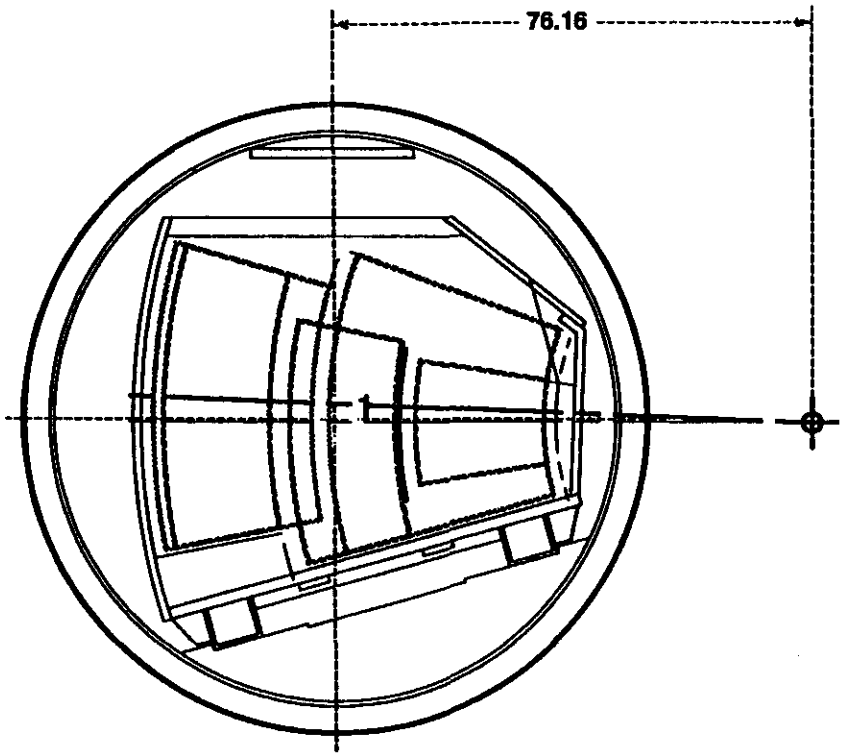

OPERATING POSITION

GEM TEST BEAM CRYOSTAT
LOADING STAND/INSERTION OF MODULES

- PRELIMINARY SIZE IS 12' WD X 30' LG X 8' HT
- ELEVATES BATH BOX TO LEVEL OF CRYOSTAT
- PROVIDES 3 FOOT WIDE WALKWAY AROUND BATH BOX
- WILL BE FIXED TO FLOOR – NOT ON RAILS
- SIX FOOT LONG REMOVABLE BRIDGE TO BE INSTALLED BETWEEN LOADING STAND AND VESSEL
  - NECESSARY TO SPAN OVER CABLE TRAY
- ROLLER/JACK ASSEMBLY USED TO TRANSFER BATH BOX FROM LOADING STAND TO SUPPORT STRUCTURE ON INSIDE OF VESSEL

Neil Hall, SSCL - (214)708-6180
June 18, 1993

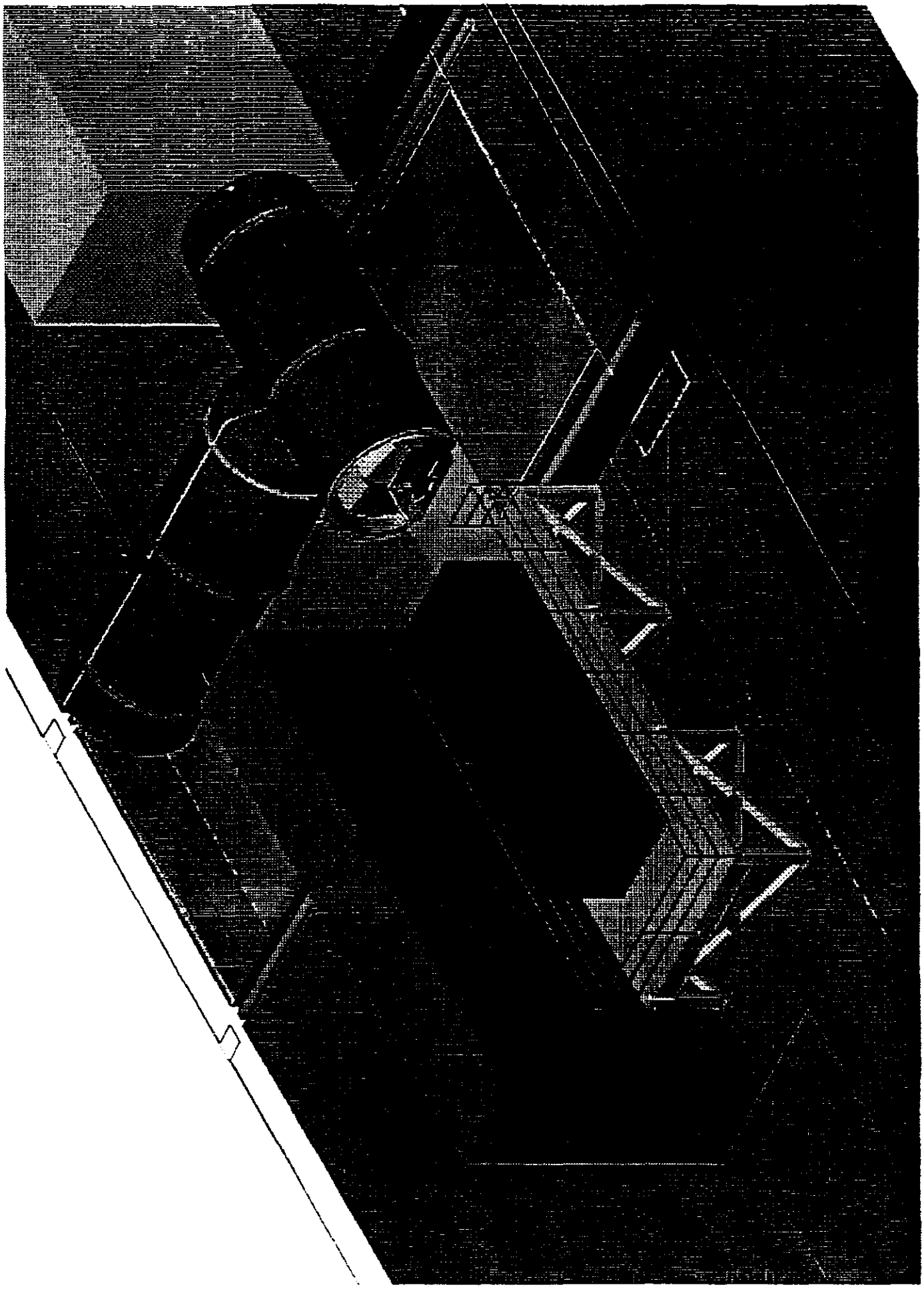

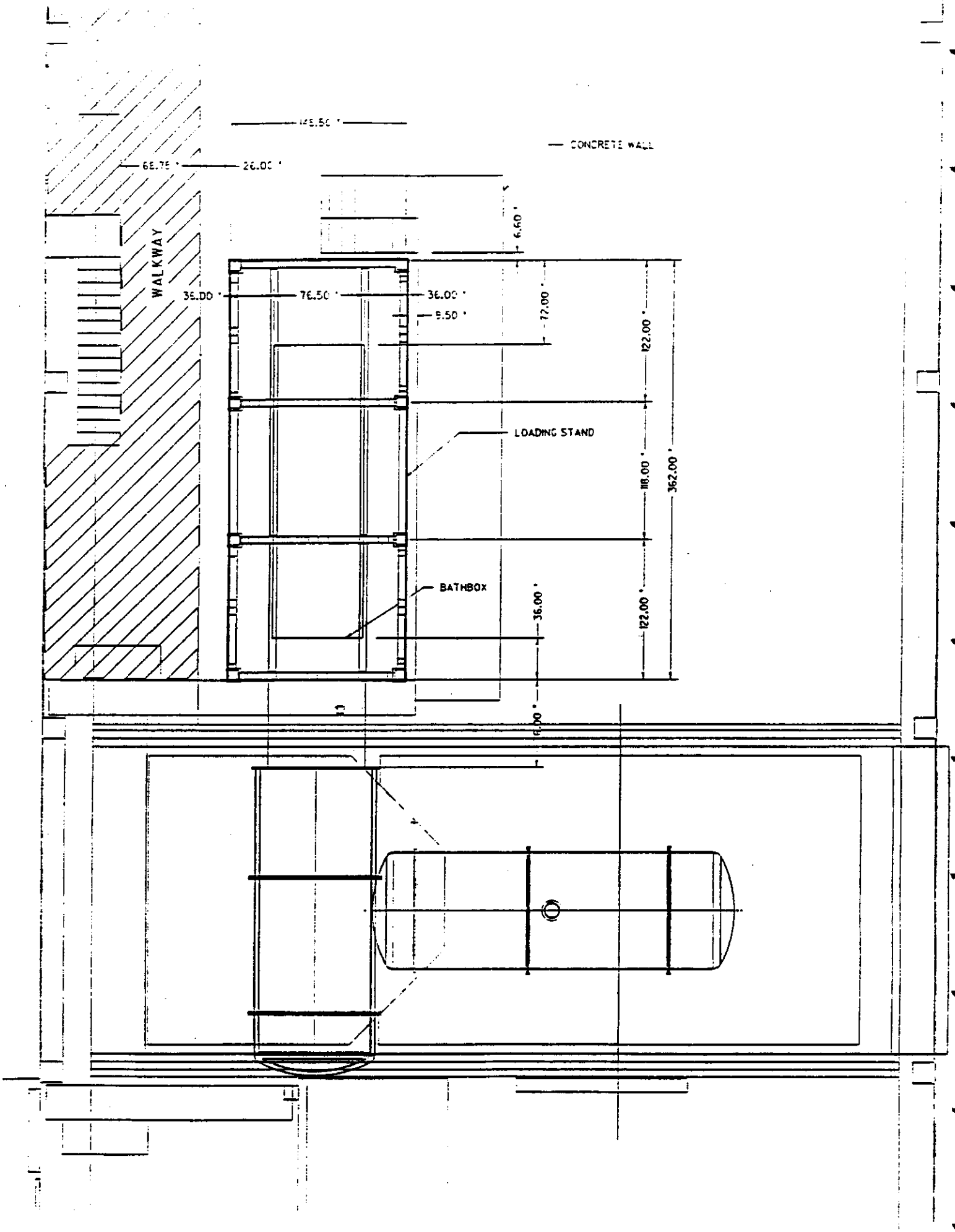
CONCRETE WALL
WALKWAY
26.00 '
6.60 '
36.00 '
76.50 '
36.00 '
8.50 '
77.00 '
122.00 '
LOADING STAND
118.00 '
362.00 '
BATHBOX
36.00 '
122.00 '

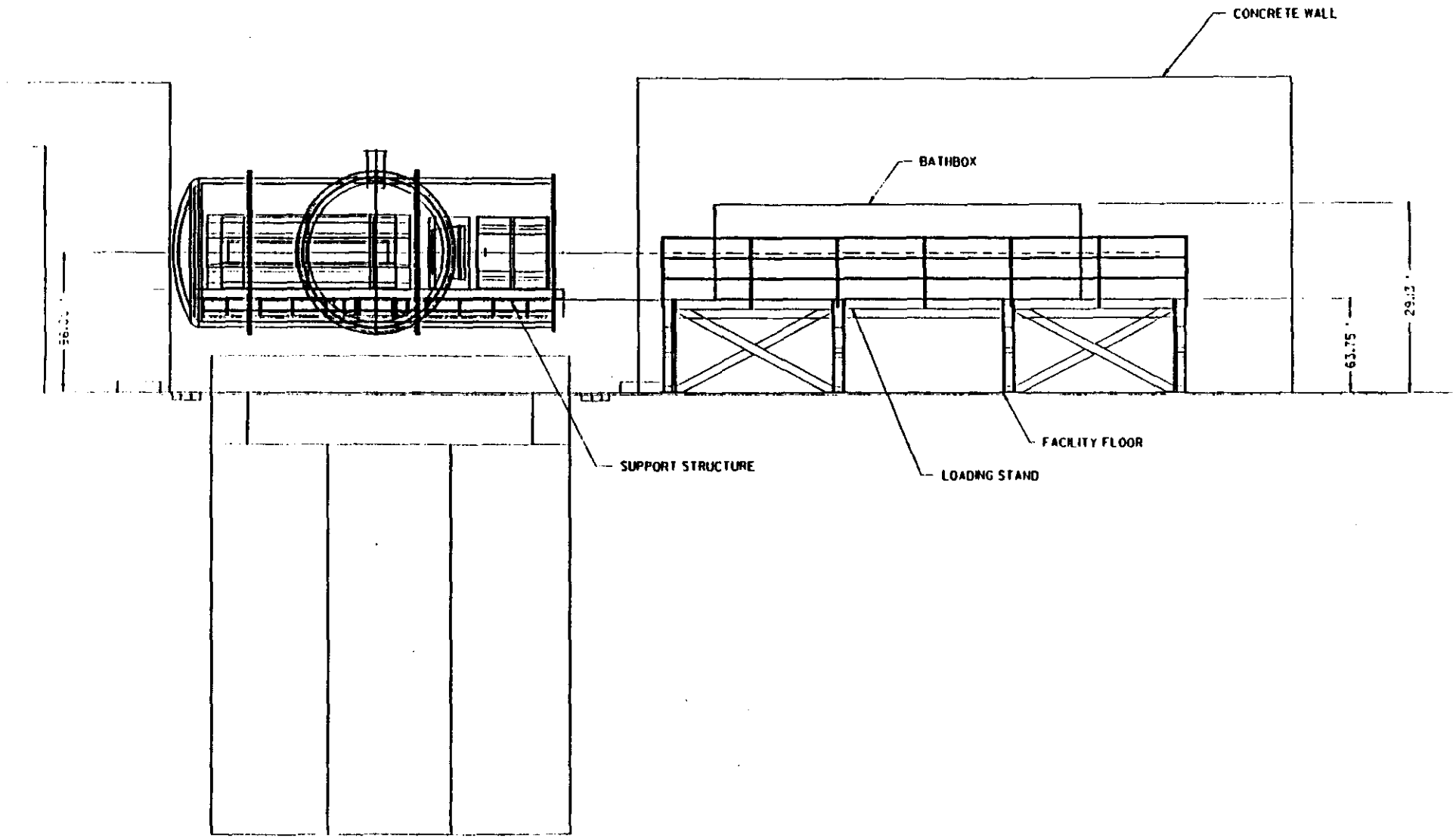
CONCRETE WALL
BATHBOX
63.75'
29.3'
FACILITY FLOOR
SUPPORT STRUCTURE
LOADING STAND

GEM TEST BEAM CRYOSTAT
OPEN ITEMS/ITEMS OF CONCERN

- HOW WILL VESSEL BE MOVED INTO BUILDING?
- IS THERE ADEQUATE ROOM TO INSTALL MODULES FROM CONCRETE WALL SIDE OF BATH BOX?
- HOW WILL SIGNAL CABLES BE ROUTED IN BATH BOX? IS THERE ENOUGH ROOM FOR THEM TO CHANGE DIRECTION WITHOUT KINKING?
  - ROUTING SCHEME MAY REQUIRE ADDITIONAL CABLE WIRE. IS CABLE LENGTH A CRITICAL FACTOR.? HOW LONG CAN CABLES BE FOR EACH OF THE MODULES?
- ROUTING AND HOOK-UP OF ALL LINES INTERNAL TO VESSEL SHOULD BE EVALUATED IN DETAIL TO ENSURE THERE WILL BE NO SPIDER WEBBING OF LINES
- NEED TO ESTABLISH REQUIREMENT FOR MODULE LOCATION WITH RESPECT TO POINT ON OUTER VESSEL
  - TOLERANCE REQUIREMENT
  - POINT AT WHICH EACH BATH BOX MUST BE FIXED TO INNER VESSEL

Neil Hall, SSCL - (214)708-6180
June 16, 1993

M WEST TEST

TRANSPORTER

"DESIGN CRITERIA"

UNIVERSITY OF ROCHESTER
PHYSICS AND ASTRONOMY DEPT.
MAY 1993

Dan Spisiak

Dan Spisiak

SIDNEY W. BARNES CYCLOTRON LABORATORY • ROOM A - 8 • (716) 275 - 8061

May 12, 1993

University of Rochester
Physics & Astronomy Department

Attention: Professor Paul Slattery

Subject: Request for Quotation of MWEST Transporter (3965)

Dear Professor Slattery,

Based on recent conversations with Professor Lobkowicz, it was suggested that the MWEST Transporter drawing and specification package be put together by the end of May so that we could start proceedings with the Safety Review Committee at Fermilab. This drawing package will serve as the preliminary Request for Quotation document and contain the drawings known as CONCEPC3.

1. The Transporter will consist of a powered Car designed to support a 200 Ton load, run on existing track and utilize the existing traverse drive at Fermilab. The design will incorporate features of fabrication that will allow reasonable shipping size and permit final assembly on existing Hillman roller assemblies at Fermilab.

2. A Turntable Chassis is to be fabricated inside of the Car which will support a pair of rubber tired Idler Turning Rolls in a common frame table.

3. The common frame Idler Rolls will be adjusted vertically from zero to 15 inches to align the test Calorimeter in the Beam for roll angles of +5 to -7 degrees. The present Calorimeter design is 103.25" diameter with an overall length of 316.375". The estimated weight is 100 Tons. The common frame table will also support two Scintillating Calorimeters in two horizontal positions. A single 16 foot Calorimeter weight has been reported to be under 25 Tons.

4. The Calorimeter roll angle changes will be provided by a minimum of two linear actuator jacks connected to a suitable roll clevis structure. The design of the oscillator will insure the 100 Ton Calorimeter can be safely rotated from -7 to +5 Degrees.

SIDNEY W. BARNES CYCLOTRON LABORATORY • ROOM A - 8 • (716) 275 - 8061

5. The four axis (Freedom) Positioning System will be instrumented to insure axis location within +/- 0.040" and adequately powered to provide the following:

- Roll Speed = 0.014 - 0.0005 RPM (5 Degrees/Min.)
  Minimum instrumented travel = +5 / -7 Degrees.
  Position readout repeatability = +/- 2 Minutes of arc

- Rotation Speed = 0.02 - 0.001 RPM (50 Degrees/Min.)
  Minimum instrumented travel = 110 Degrees
  Position readout repeatability = +/- 2 Minutes of arc

- Elevation Speed = 6 - 0.2 IPM
  Minimum instrumented travel = 18"
  Position readout repeatability = +/- 0.040"

- Traverse Speed = 6 - 0.2 IPM (Rework may be required)
  Minimum instrumented travel = 140"
  Position readout repeatability = +/- 0.040"

6. It is expected that the RFQ process will take 3 months to complete. The General Arrangement Drawing and two cross section drawings will be prepared for the process and should be available on or before the week of July 12th. It is anticipated that the Engineering and fabrication of the Transporter will be 9 months after receipt of order by a fabrication contractor. This estimate assumes final assembly will be at Fermilab. If this schedule is held, the Transporter should be available for instrument checkout at Fermilab by the end of July 1994.

7. The "DESIGN CRITERIA" package is attached.

Dan Spisiak

cc: F. Lobkowicz
G. Ginther

TABLE OF CONTENTS

TSP - 1(A)	GEM TEST BEAM FLOOR PLAN
TSP - 3	TRANSPORTER CAR, PLAN VIEW
TSP - 4	TRANSPORTETR CROSS SECTION ELEVATION
TSP - 5	TRANSPORTER TRANSVERSE ELEVATION
TSP - 6	ASSEMBLY AREA FLOOR PLAN
TSP - 7	TRANSPORTER IN LOADING POSITION
TSP - 8	ROLL ANGLE ZERO "REF. STARTING POINT"
TSP - 9	-7 DEGREE ROLL, "HIGHEST ELEVATION"
TSP-10	+5 DEGREE ROLL, "LOWEST ELEVATION"
TSP-11	ZERO ROTATION IN TEST BEAM
TSP-12	+ 33 DEGREE ROTATION
TSP-13	- 57 DEGREE ROTATION
MWEST TRANSPORTER LOADS	

MWEST TRANSPORTER LOADS

SOURCE	LOAD	REMARKS
MODULE(S)	106,000 LBS.	
LIQUID IN BATH BOX	50,000 LBS.	
CART, BATH BOX SUPPORT STRUCTURE	10,300 LBS.	
VESSEL(S)	14,000 LBS.	
CRYOGENIC PIPING, ELECTRICAL CABLES	8,000 LBS.	
CONTINGENCY	11,700 LBS.	
		SUBTOTAL = 100 TONS
SCINTILLATING CALORIMETER(S)	96,000 LBS	C.G. OVER CAMROL BEARING
CALORIMETER SUPPORT SYSTEM	4,000 LBS.	
		SUBTOTAL = 50 TONS
IDLER ROLLS IN COMMON FRAME	9,000 LBS.	9" FWD. OF TRANSP. CEN.LINE
TURNTABLE CHASSIS	11,000 LBS.	CENTER LINE OF TRANSP.
CAR AND ELEVATION ASSEMBLY	55,000 LBS.	CENTER LINE OF TRANSP.
		SUBTOTAL = 37.5 TONS

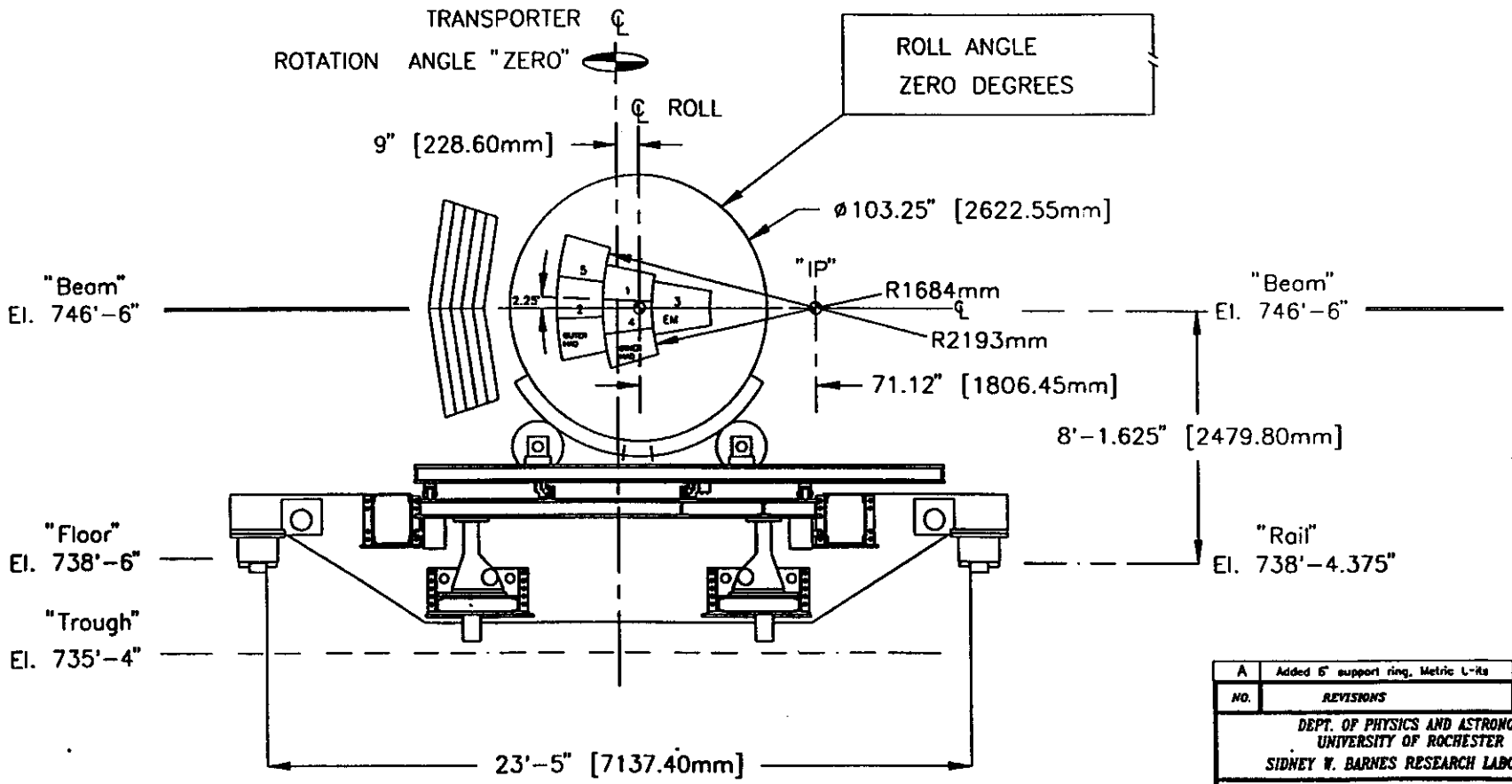

NOTES

1. Building – Architectural Units
2. Transpotrer – Engineering Units
3. Modules – Metric Units

NO.	REVISIONS	BY	DATE
A	Added 6" support ring, Metric L-its	DRS	6/11/93

DEPT. OF PHYSICS AND ASTRONOMY
UNIVERSITY OF ROCHESTER
SIDNEY W. BARNES RESEARCH LABORATORY

DWG. TITLE CONCEPC3
REF. STARTING POINT ZERO ANGLE

DR. DAN SPISIAK | DATE: 5-7-93 | FOR LOBKOWICZ
CK'D | DATE:

REMOVE ALL BURRS & SHARP EDGES
TOLERANCES UNLESS OTHERWISE SPECIFIED
DECIMALS .XX ±.01 .XXX ±.005 FRACTIONS ±1/32 ANGLES ±30'

SCALE NTS | SHEET ___ OF ___ SHEETS | DWG. NO. TSP-8 | A

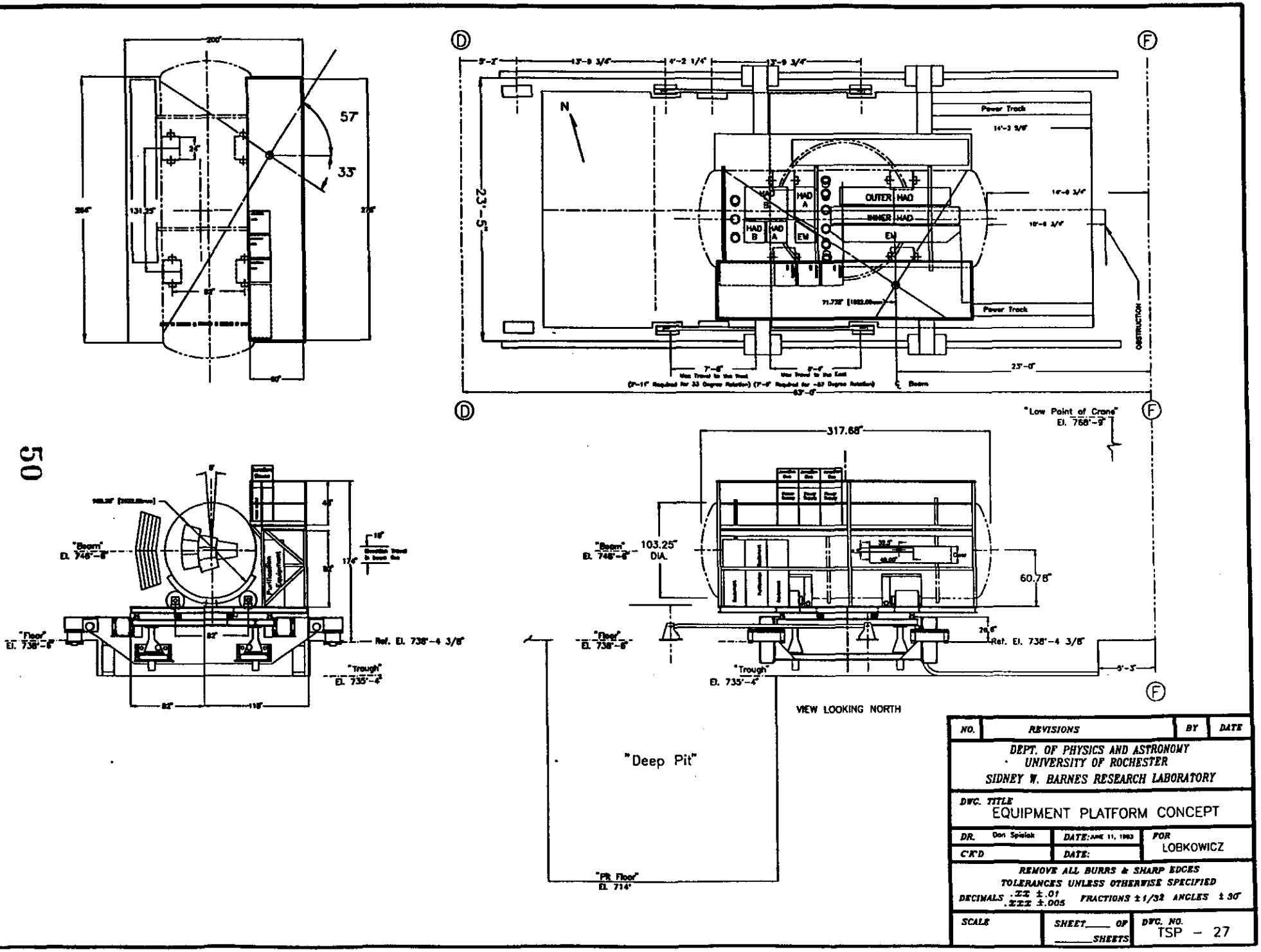
57°
33°
N
Power Track
OUTER HAD
INNER HAD
HAD A
HAD B
EM
23'-5"
Beam
OBSTRUCTION
"Low Point of Crane"
El. 768'-9"
317.68"
"Beam"
El. 746'-8"
103.25" DIA.
60.78"
"Floor"
El. 738'-8"
Ref. El. 738'-4 3/8"
"Trough"
El. 735'-4"
VIEW LOOKING NORTH
"Deep Pit"
"Pit Floor"
El. 714'
NO.
REVISIONS
BY
DATE
DEPT. OF PHYSICS AND ASTRONOMY
UNIVERSITY OF ROCHESTER
SIDNEY W. BARNES RESEARCH LABORATORY
DWG. TITLE
EQUIPMENT PLATFORM CONCEPT
DR. Don Spielak
DATE: June 11, 1993
FOR
LOBKOWICZ
C'K'D
DATE:
REMOVE ALL BURRS & SHARP EDGES
TOLERANCES UNLESS OTHERWISE SPECIFIED
DECIMALS .XX ±.01 .XXX ±.005
FRACTIONS ±1/32
ANGLES ±30'
SCALE
SHEET ___ OF ___ SHEETS
DWG. NO.
TSP - 27

ROTATION ANGLE = ZERO
TRASPORTER @ REFERENCE IP

ROTATION ANGLE = +33 DEGREES
MOVE TRASPORTER 34.45" WEST

ROTATION ANGLE = −57 DEGREES
MOVE TRASPORTER 93.13" EAST

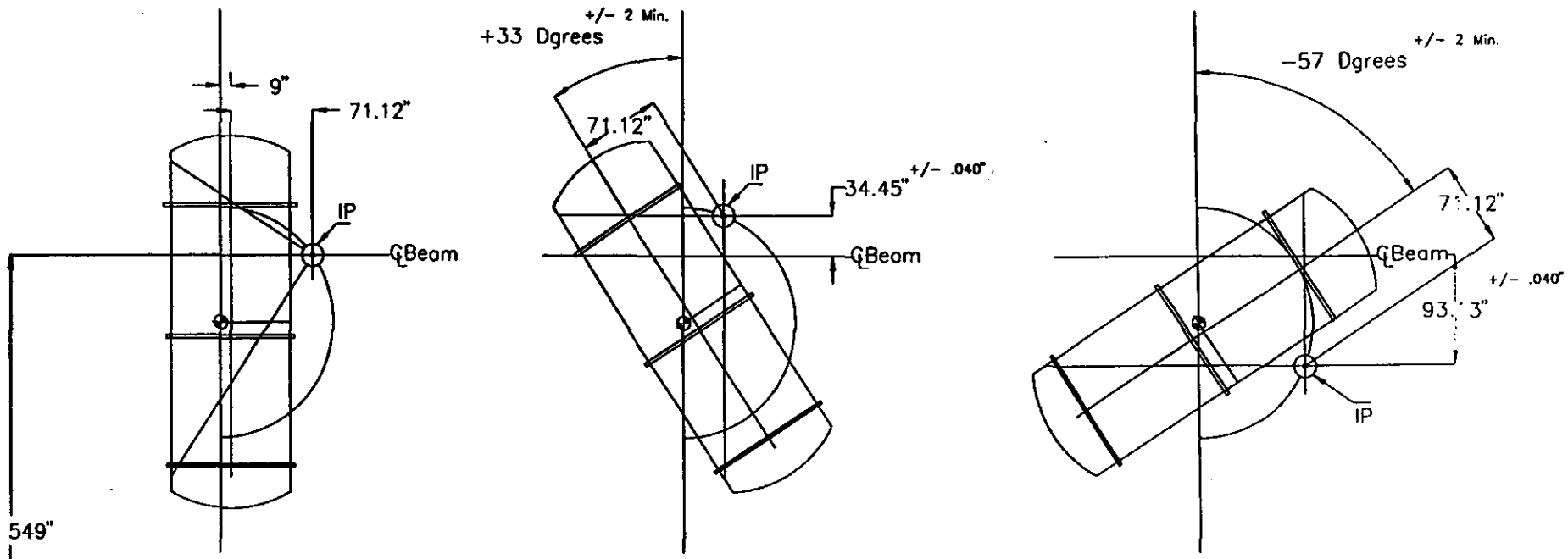

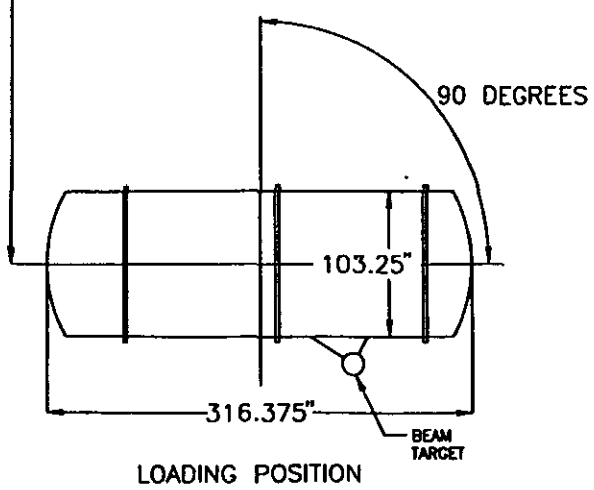

LOADING POSITION

1. TOTAL ROTATION ANGLE FOR TEST = 90 DEGREES
2. ROTATION ANGLE FOR LOADING = 90 DEGREES
3. TOTAL TRAVERSE MOTION FOR TEST = 127.58"
4. TOTAL TRAVERSE MOTION FROM LOADING = 549"

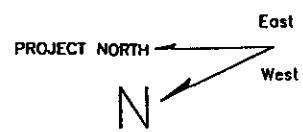

NO.	REVISIONS	BY	DATE

DEPT. OF PHYSICS AND ASTRONOMY
UNIVERSITY OF ROCHESTER
SIDNEY W. BARNES RESEARCH LABORATORY

DWG. TITLE: ROTATION & TRAVERSE POSITIONING

DR. Don Spiesiak | DATE: 5/14/1993 | FOR LOBKOWICZ
C'K'D | DATE:

REMOVE ALL BURRS & SHARP EDGES
TOLERANCES UNLESS OTHERWISE SPECIFIED
DECIMALS .XX ±.01 .XXX ±.005 FRACTIONS ±1/32 ANGLES ±30'

SCALE NTS | SHEET ___ OF ___ SHEETS | DWG. NO. TSP−17 | REV A

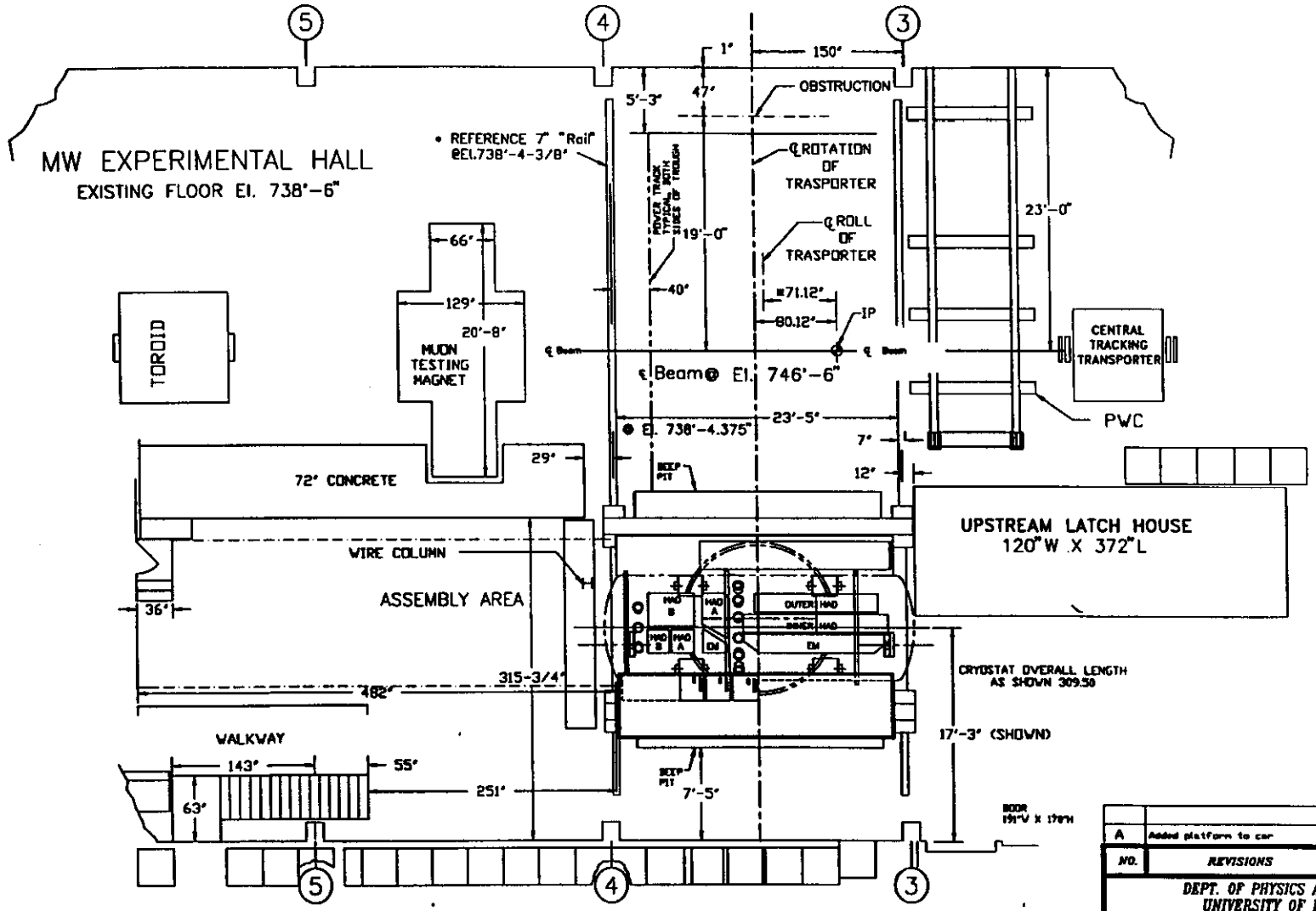

NO.	REVISIONS	BY	DATE
A	Added platform to car	BRS	6/16/93

DEPT. OF PHYSICS AND ASTRONOMY
UNIVERSITY OF ROCHESTER
SIDNEY W. BARNES RESEARCH LABORATORY

DWG. TITLE ASSEMBLY AREA FLOOR PLAN

DR. Dan Spisiak | DATE: | FOR LOBKOWICZ
C'K'D | DATE:

REMOVE ALL BURRS & SHARP EDGES
TOLERANCES UNLESS OTHERWISE SPECIFIED
DECIMALS .XX ±.01 .XXX ±.005 FRACTIONS ±1/32 ANGLES ±30'

SCALE NTS | SHEET ___ OF SHEETS | DWG. NO. TSP-6 | B

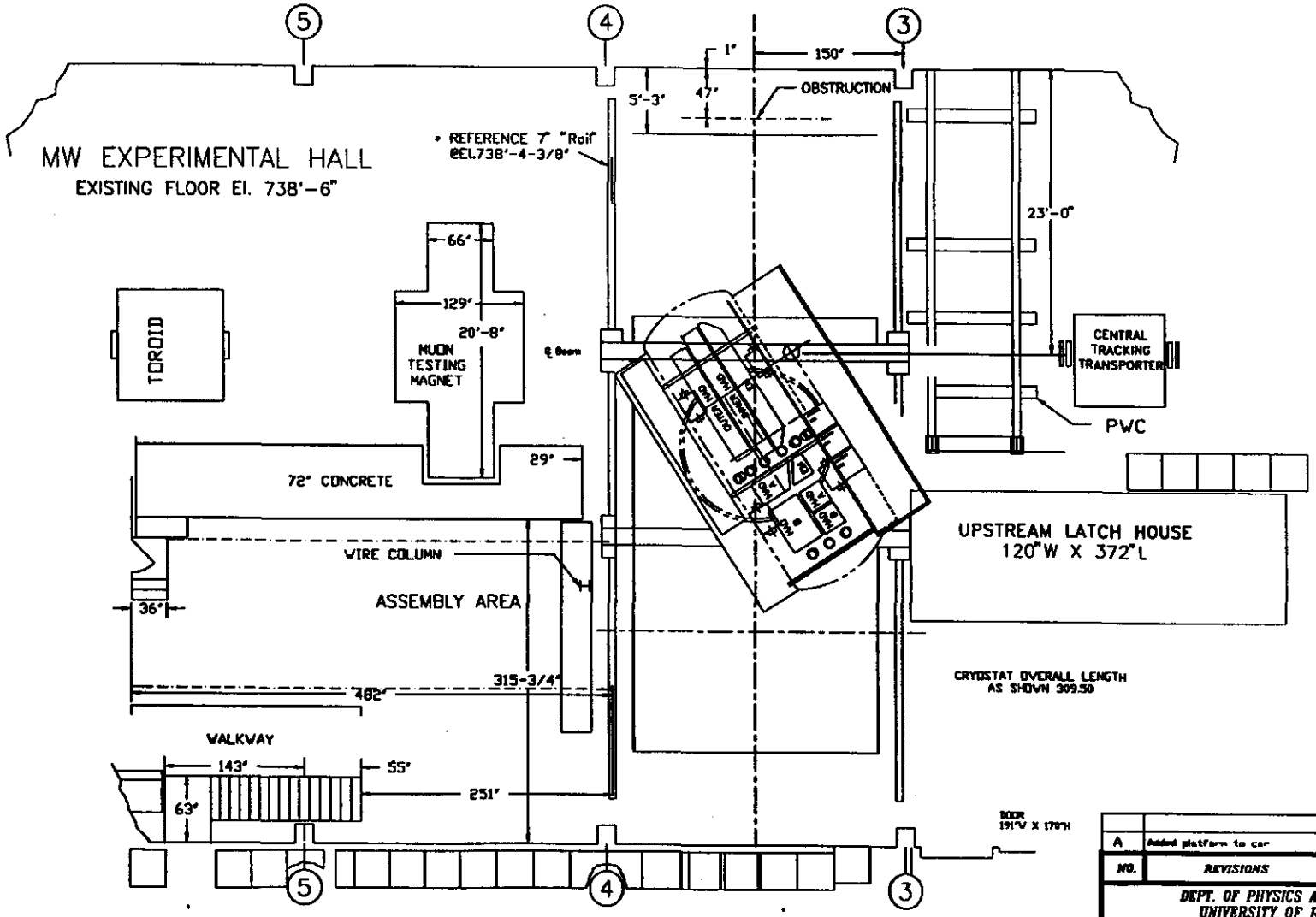

NO.	REVISIONS	BY	DATE
A	Added platform to car	BRS	6/16/93

DEPT. OF PHYSICS AND ASTRONOMY
UNIVERSITY OF ROCHESTER
SIDNEY W. BARNES RESEARCH LABORATORY

DWG. TITLE ASSEMBLY AREA FLOOR PLAN

DR. Dan Spielak | DATE: | FOR LOBKOWICZ
C'K'D | DATE:

REMOVE ALL BURRS & SHARP EDGES
TOLERANCES UNLESS OTHERWISE SPECIFIED
DECIMALS .XX ±.01 .XXX ±.005 FRACTIONS ±1/32 ANGLES ±30'

SCALE NTS | SHEET ___ OF | DWG. NO.

Sensors built for precision and rugged reliability.

The Temposonics sensor's tube is constructed of a proprietary magnetostrictive alloy that is specially processed to make its modulus of elasticity largely independent of temperature and aging effects. It is mounted under tension in a 3/8-inch stainless steel tube for additional protection. Damping materials are clamped around the waveguide's ends to absorb the strain pulses and to prevent distortions resulting from their reflection.

The electric pulse-carrying conductor is an insulated wire coaxially threaded through the 22-mil diameter (2-3 mil wall) hollow waveguide. This circuit is electrically isolated from the rod and the strain pulses.

The torsional strain pulse is converted to a transverse strain pulse by metallic tapes welded perpendicular to the waveguide. The tapes' special strain-sensitive magnetization characteristics allow the strain pulse to induce a magnetic reluctance change, which in turn causes a voltage pulse in sensing coils.

This Temposonics design offers several advantages: The sensing coils generate high output signals as well as providing common mode noise rejection from external electrical noise sources. In addition, the mode converter design responds only to torsional strain pulses on the tube; longitudinal pulses caused by shock or vibration are not detected.

Meticulous design and years of exhaustive testing have achieved a sensor construction that produces a signal which performs high accuracy positioning tasks and keeps on performing under even the most adverse conditions.

Special orders satisfy special requirements.

In addition to its wide range of standard options, MTS can provide specially designed Temposonics systems. Some examples are metric versions, special electrical stroke lengths, special threads, optional deadzone dimensions, increased clearance between magnet and sensor, velocity output for analog versions, and differential output for either digital or analog operation.

Temposonics linear displacement transducers are also offered specifically for liquid level applications.

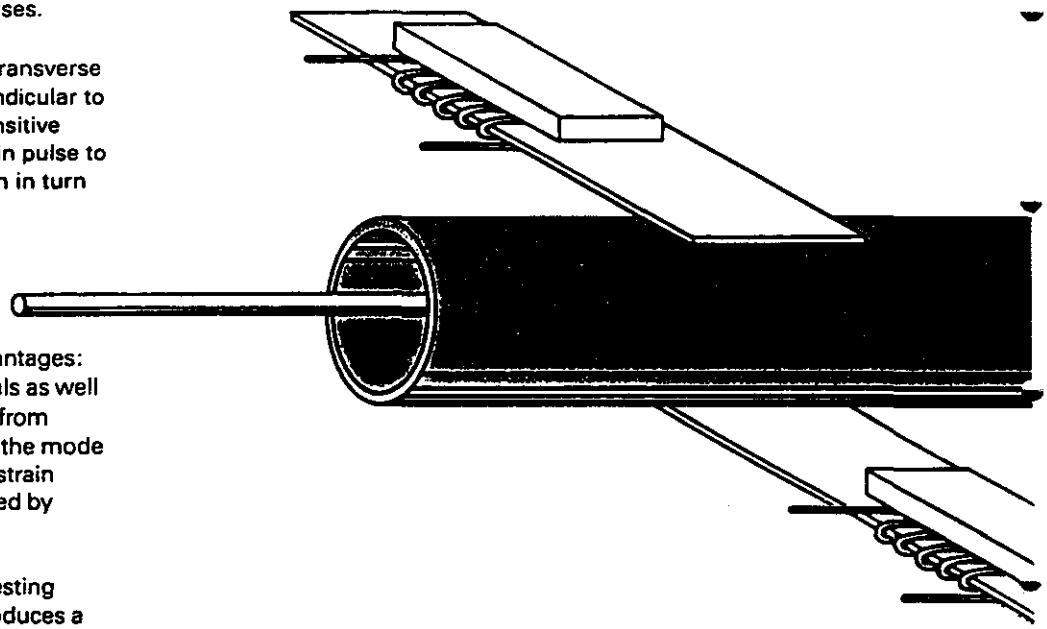

Specifications.

Linearity	±0.05% to a minimum of .002 inches
Repeatability	±0.001% or 0.0001 inch, whichever is greater
Output—Analog or Digital	No A/D conversion loss of accuracy
Resolution	Digital: standard models from 0.0001 to 0.1 inch (0.00025 to 0.254 cm); higher resolutions available Analog: Stepless continuous output
Output Reference	Digital: absolute (not incremental) Analog: internal zener or optional external reference
Displacement Range	Up to 30 feet (900 cm) or longer
Temperature Coefficient	3 parts per million/inch of stroke/°F (rod only)
Reliability	Up to 4 million hours MTBF (rod only)
Stability	Exceptional, no adjustments necessary
Hysteresis	.0008 inches

Barrel Hadronic Calorimetry

Segmentation	$\Delta\eta \times \Delta\phi = 0.0785 \times 0.0785\ (\pi/40)$
Module layers	2 in depth (inner/outer)
Each module covers	$\Delta\eta \times \Delta\phi = 0.9(\text{typ}) \times 0.157$
Total # of modules	160 (40 × 2 sides ×2 layers)
Transformer ratio	3 : 1, electrostatic
Unit cell:	6 gaps (3 in series, 2 sets in parallel)
Number of module layers	2 (inner/outer)
Absorber material	9 mm Lead
Active material	LKr, 2 mm gap
Number of cells/layer	6
Active absorber/ cell	0.346 Abs. lengths
Total absorber	4.56 Abs. lengths

Cell Orientation in Modules

Segmentation (Eta x Phi)

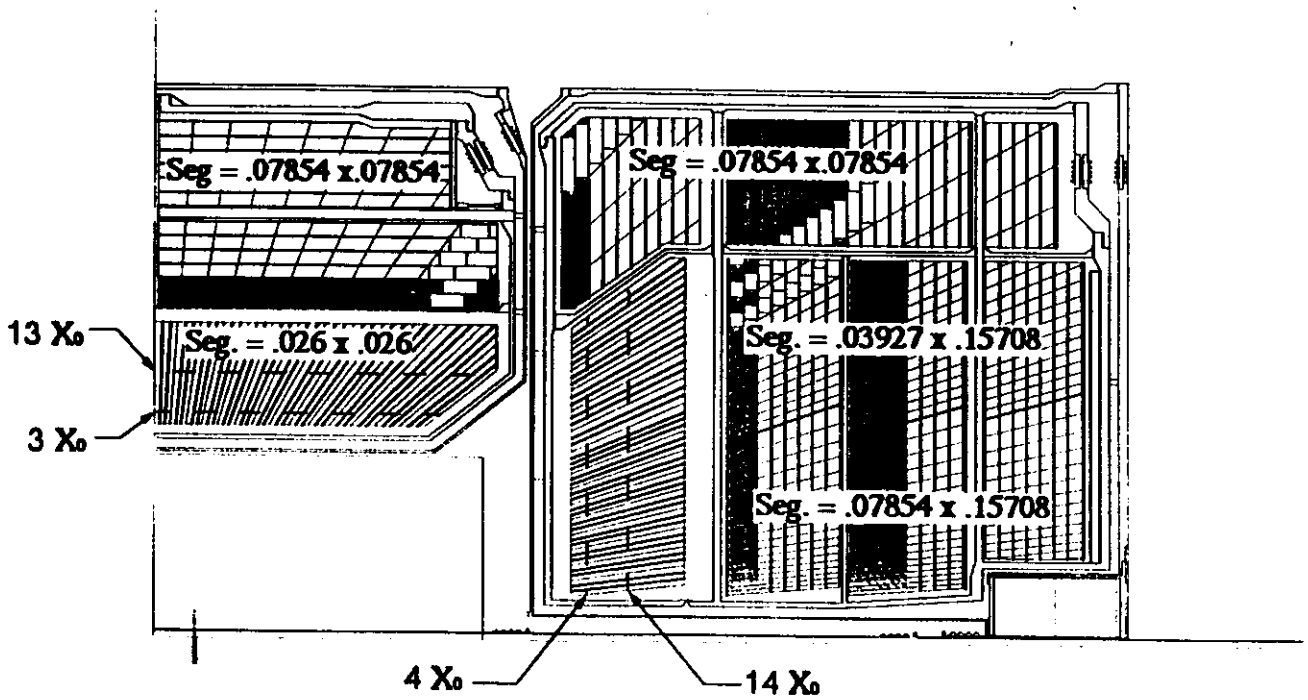

BARREL HADRONIC TOWERS
END VIEW AT WASHER ATTACHMENT
All Dimensions in millimeters

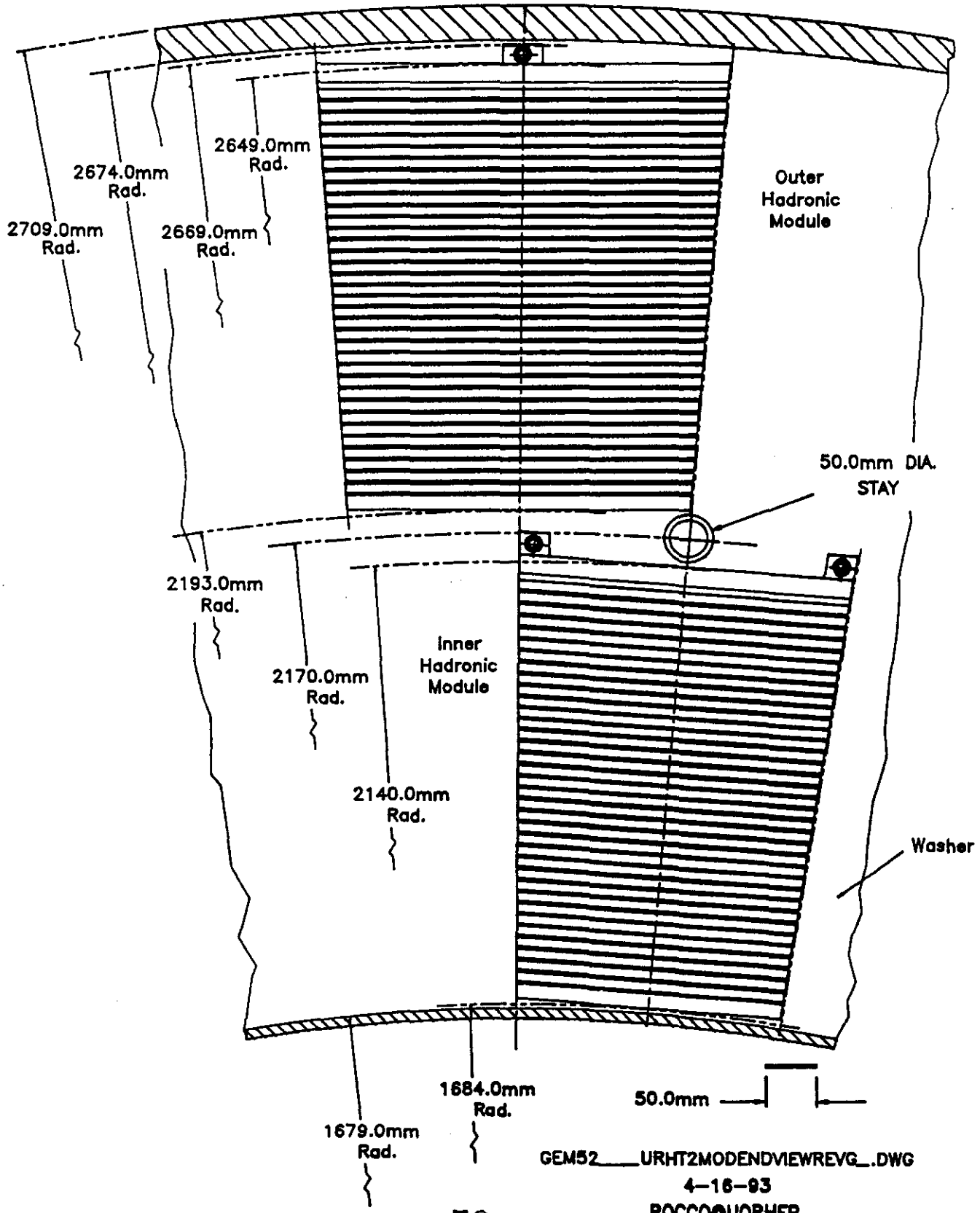

GEM52____URHT2MODENDVIEWREVG_.DWG
4-16-93
ROCCO@UORHEP

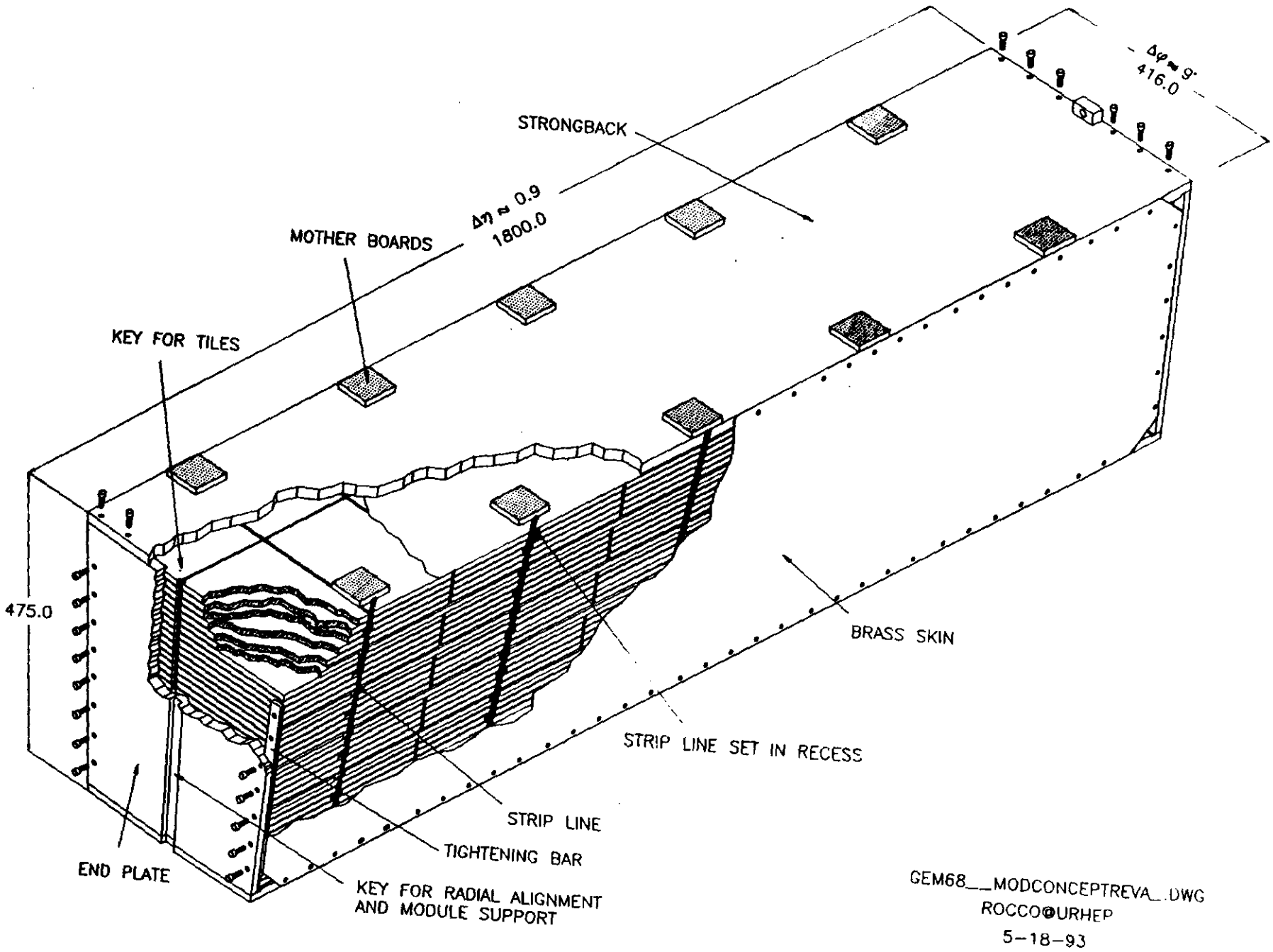
STRONGBACK
$\Delta\eta \approx 0.9$
1800.0
$\Delta\varphi \approx 9^\circ$
416.0
MOTHER BOARDS
KEY FOR TILES
475.0
BRASS SKIN
STRIP LINE SET IN RECESS
STRIP LINE
TIGHTENING BAR
END PLATE
KEY FOR RADIAL ALIGNMENT
AND MODULE SUPPORT
GEM68__MODCONCEPTREVA_.DWG
ROCCO@URHEP
5-18-93

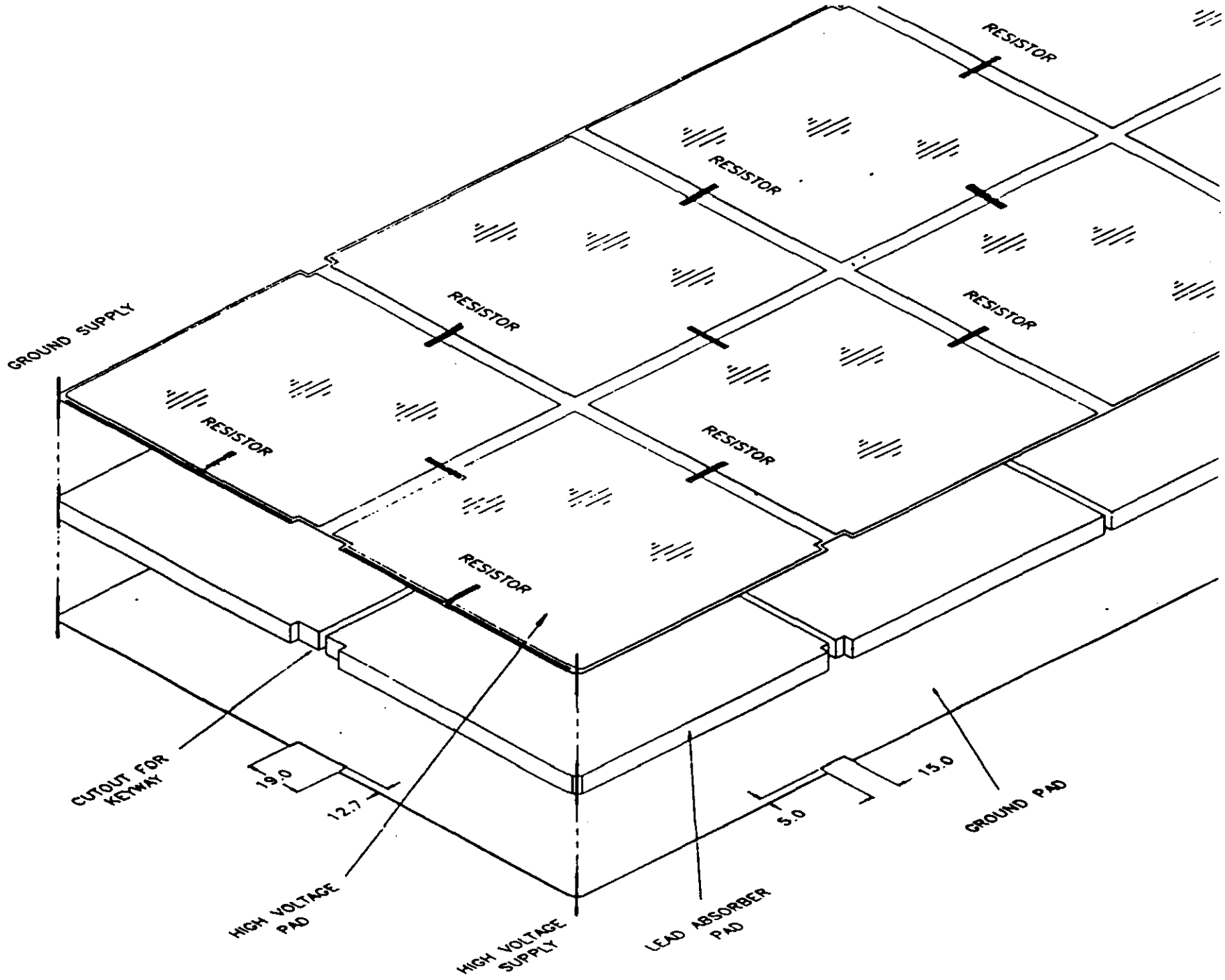
GROUND SUPPLY
RESISTOR
RESISTOR
RESISTOR
RESISTOR
RESISTOR
RESISTOR
RESISTOR
RESISTOR
CUTOUT FOR KEYWAY
19.0
12.7
HIGH VOLTAGE PAD
HIGH VOLTAGE SUPPLY
LEAD ABSORBER PAD
5.0
15.0
GROUND PAD

③

STRIPLINE/TILE ATTACHMENT

All Dimensions in Millimeters

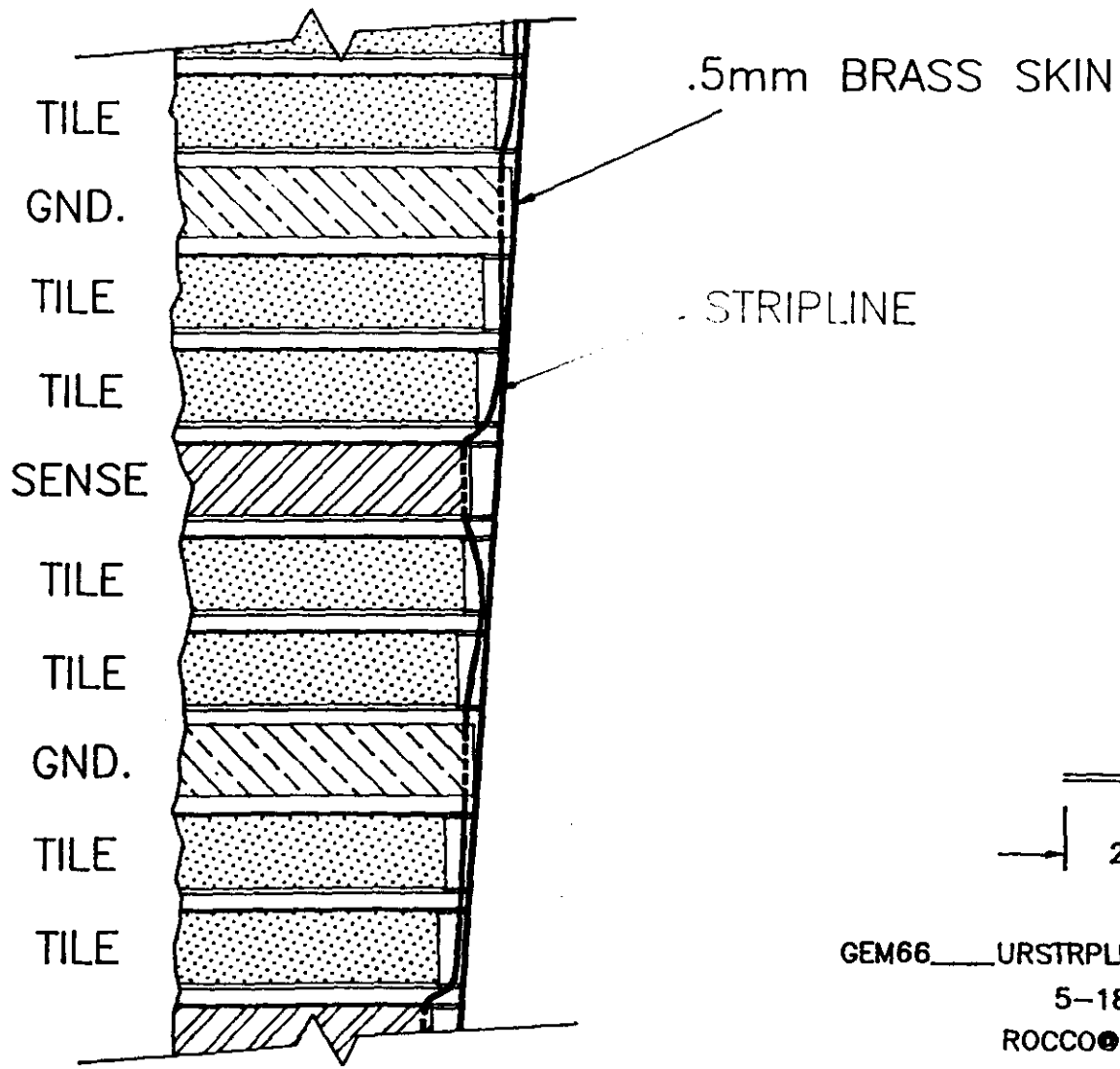

GEM66____URSTRPLNTILATACREV___.DWG
5–18–93
ROCCO@UORHEP

DEFORMATION TEST SETUP

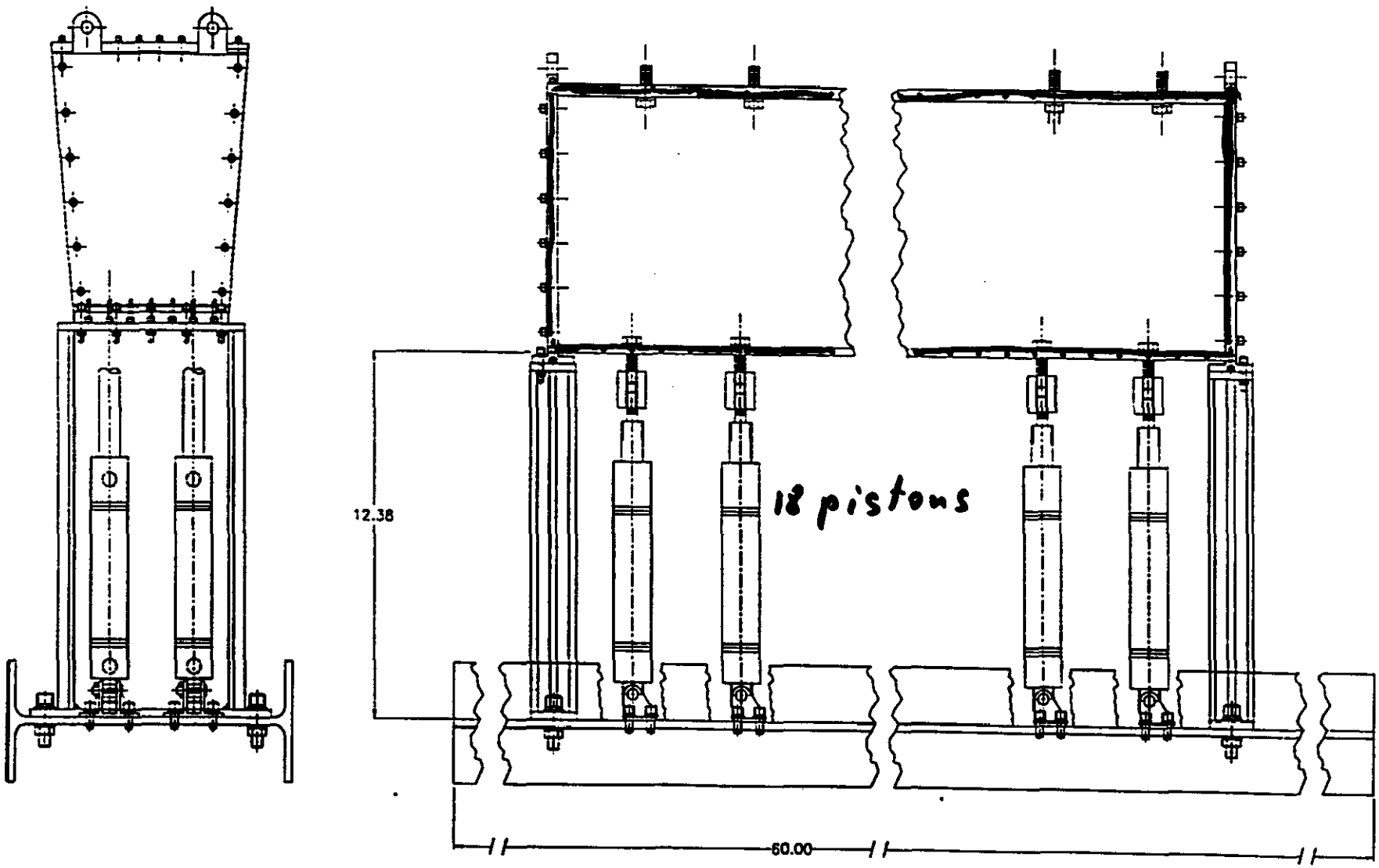

$\frac{1}{2}$ scale

GEM63____URMODTESTFIXTURREV___.DWG
ROCCO@URHEP
4-28-93

Scaling - Models

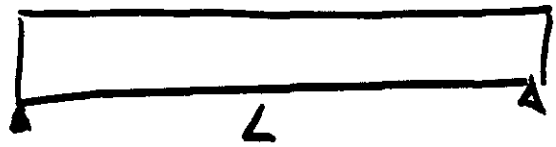

$$\text{Area} \sim L^2$$

$$\text{Weight} \sim L^2$$

$$\text{Torque} \sim W \cdot L \sim L^3$$

$$\text{Force} \sim \frac{T}{L} \sim L^2$$

$$\text{Stress} = \frac{\text{Force}}{\text{Area}} \sim 1$$

radius $\quad \frac{1}{\rho} \sim \underbrace{\frac{\delta l}{l}}_{\sigma \approx 1} \cdot \frac{1}{x} \sim \frac{1}{L}$

deflection: $\propto \frac{L^2}{\rho} \sim L$

1 Weight Full scale $\leq$ 5000 lbs

$\rightarrow$ " 1 Weight half scale " $\leq$ 1250 lbs

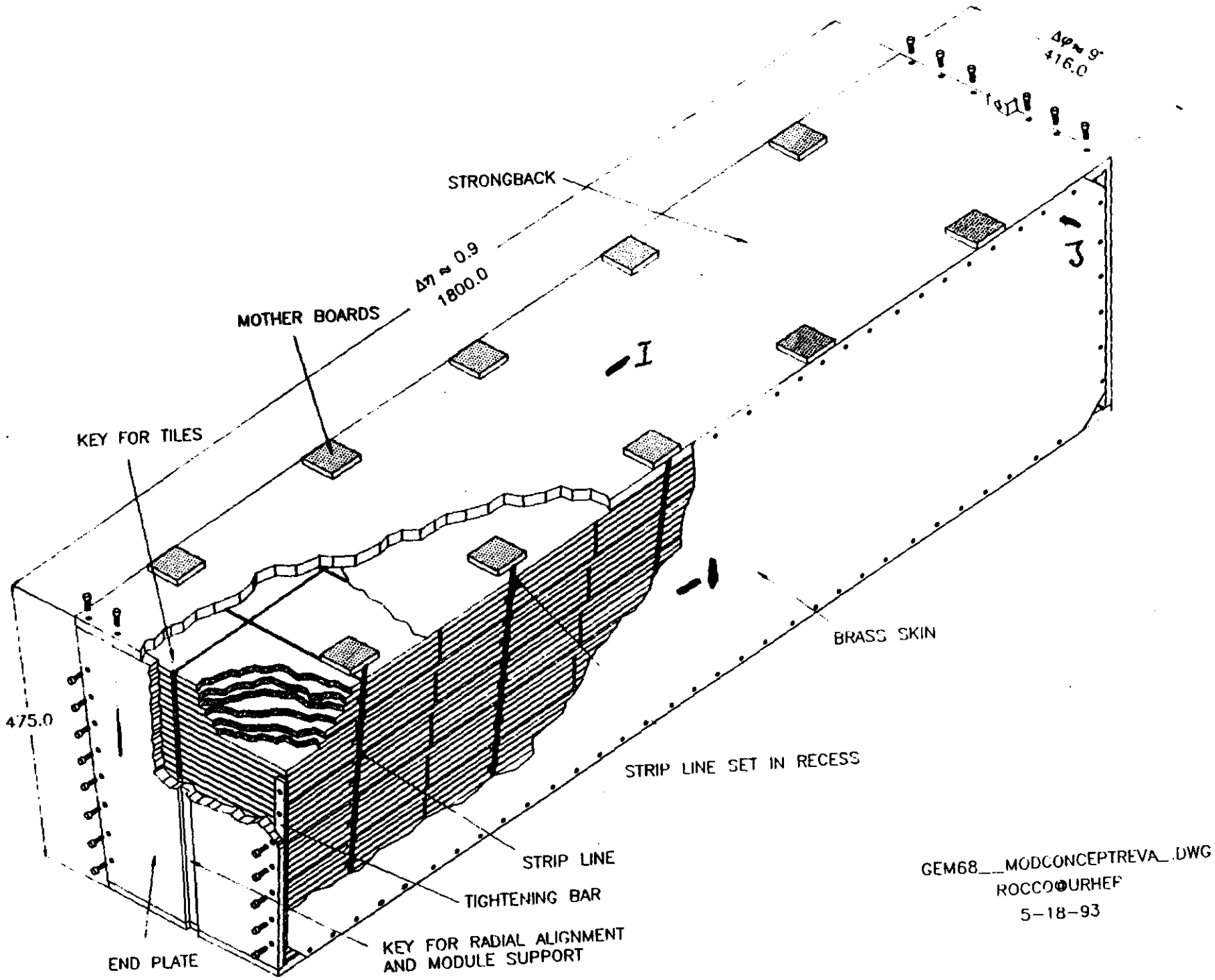
STRONGBACK
Δη ≈ 0.9
1800.0
MOTHER BOARDS
KEY FOR TILES
Δφ ≈ 9°
416.0
BRASS SKIN
475.0
STRIP LINE SET IN RECESS
STRIP LINE
TIGHTENING BAR
KEY FOR RADIAL ALIGNMENT
AND MODULE SUPPORT
END PLATE
GEM68__MODCONCEPTREVA_.DWG
ROCCO@URHEP
5-18-93

June 14, 1993

All at center

Data from Strain Gage A

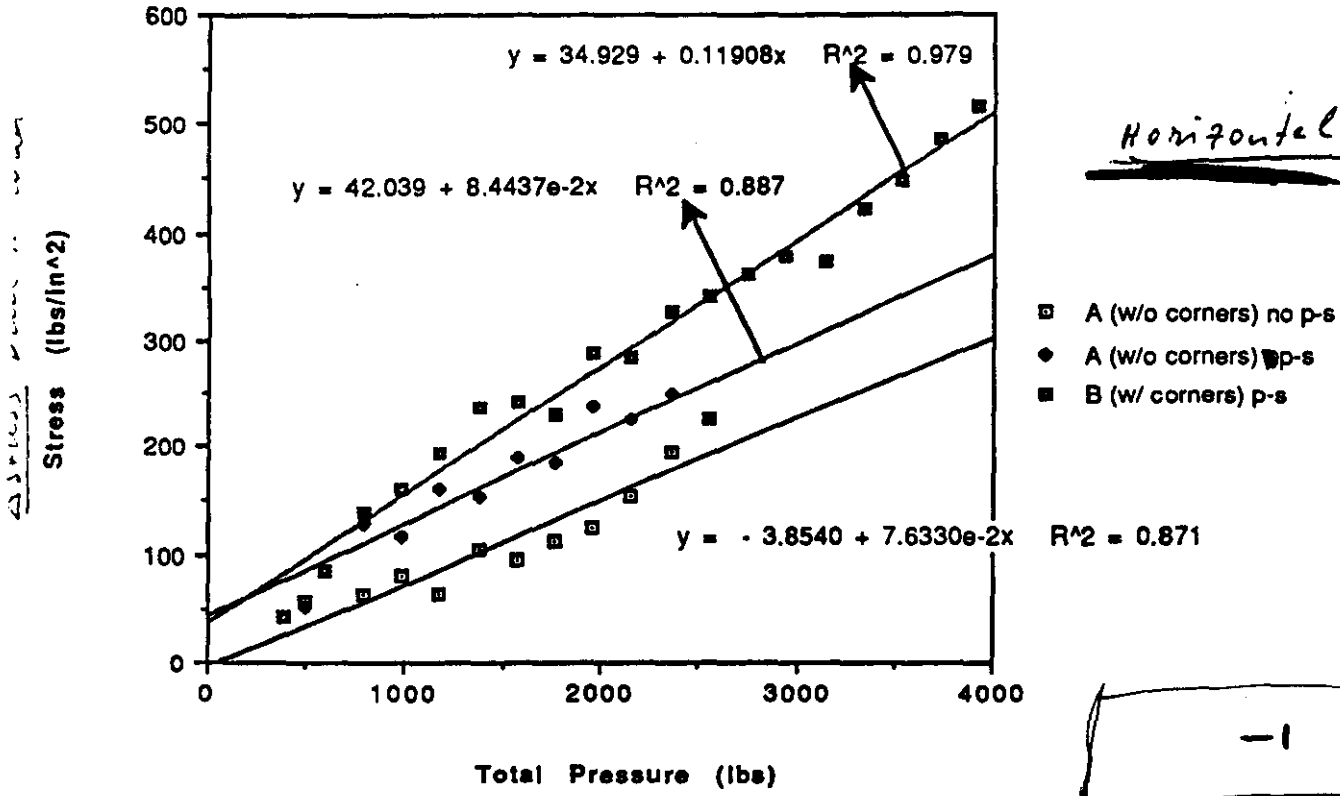

Horizontal

-1

Data from Strain Gage B

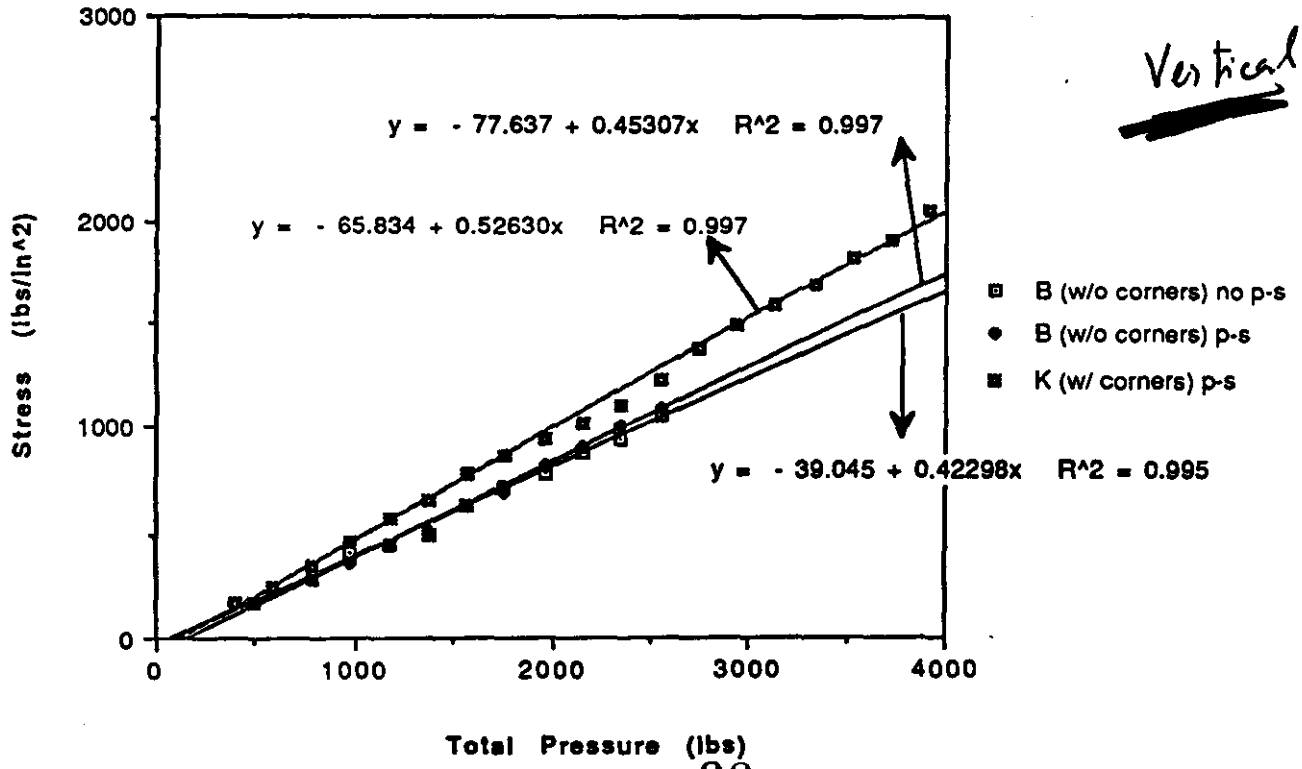

Vertical

Data from Strain Gage E

Horizon

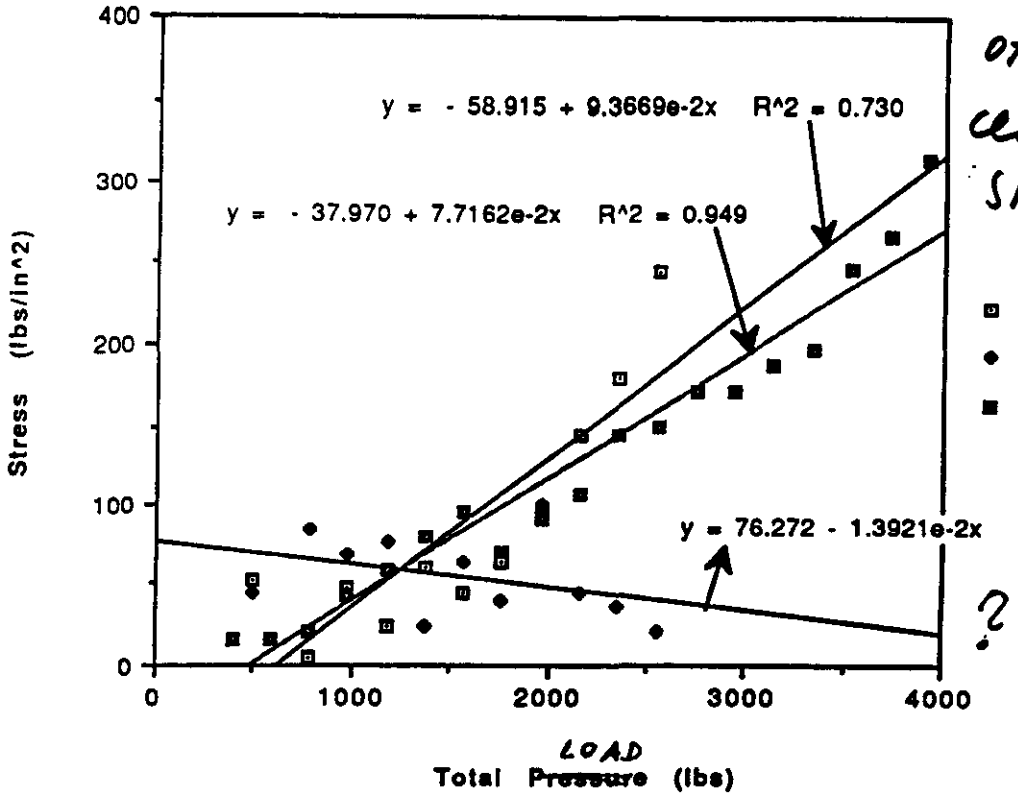

other side
center of
skin

Data from Strain Gage I

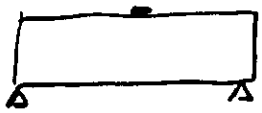

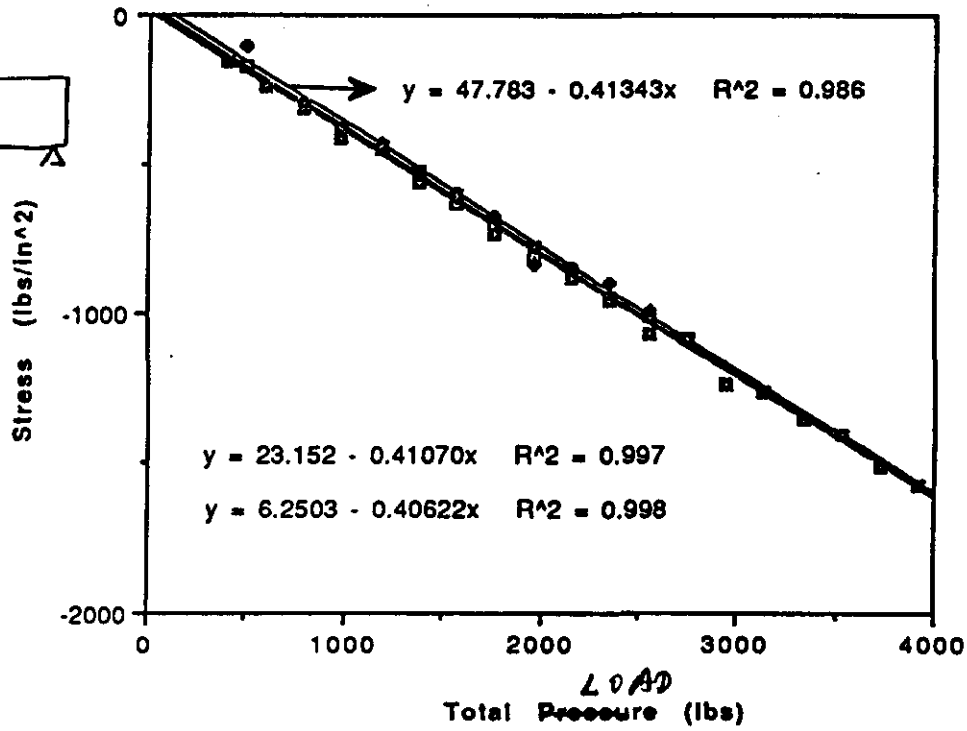

Top of box
longitudinal

June 14, 1993

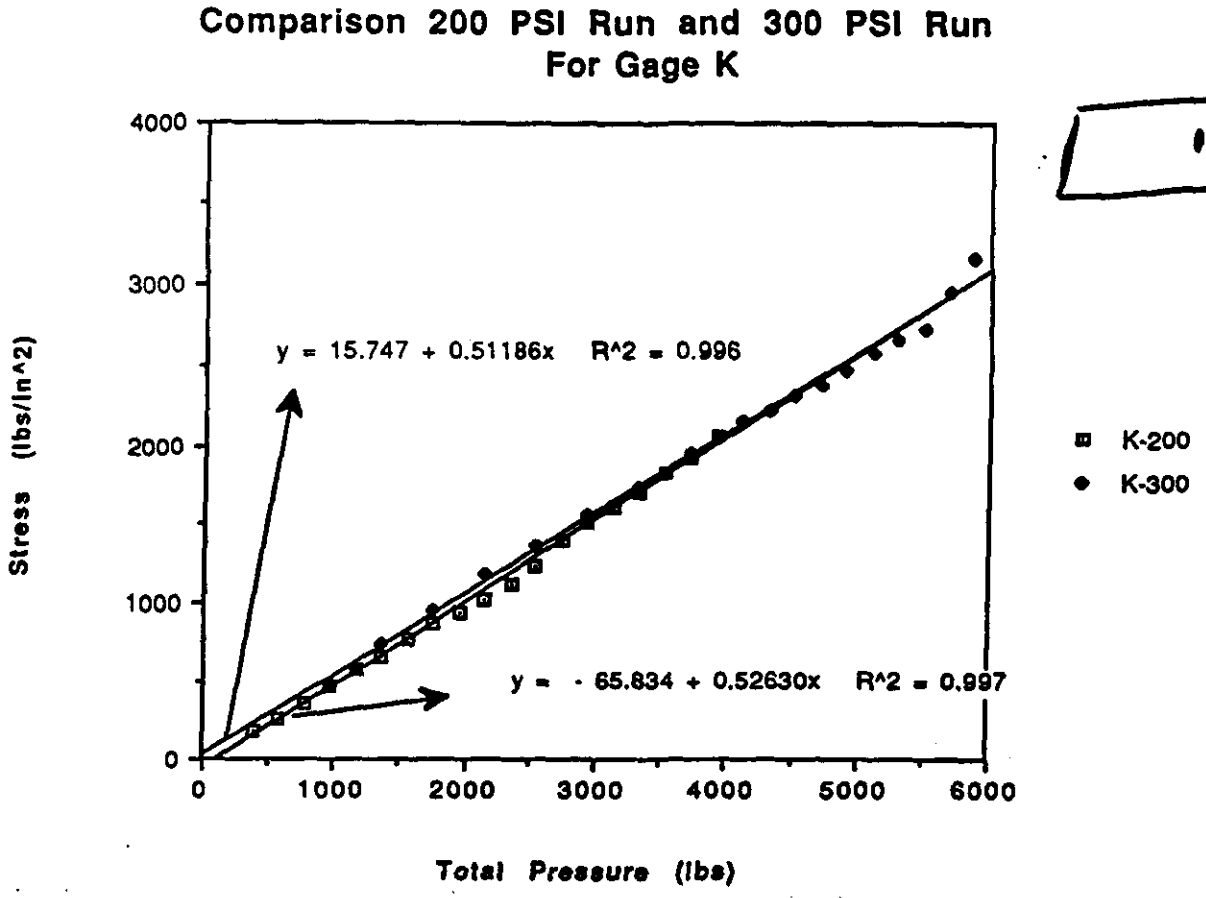

Vertical at center

The same style comparison graphs were for the top and bottom gages. The following data and graphs are from these gages.

June 14, 1993

corner of module

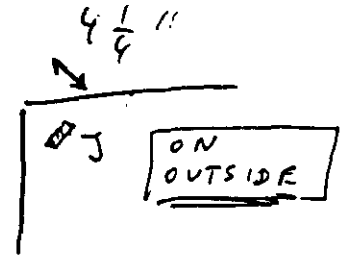

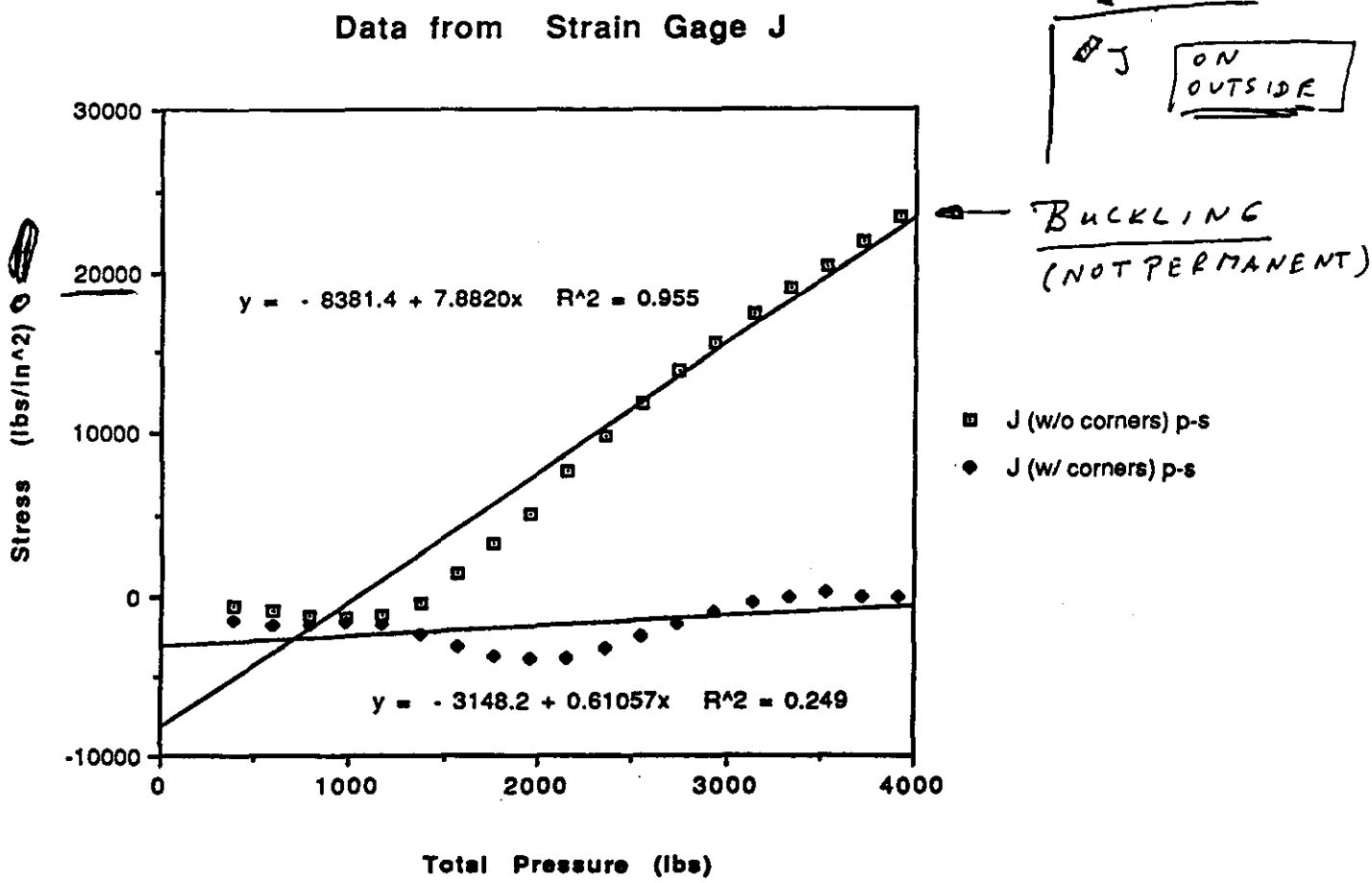

W/O corners: ~ 1" cut off

For J there were only two test. J ~~was~~ was added after the 1st set of runs (the w/o corners, no p-s)

Difference in some strain gage letters are due to differences in labeling between the different sets of measurements

For w/o corners no p-s } Setup on pgs 6, 16, 42.
w/o corners p-s }
w/ corners p-s } Setup on pg 58.

June 14, 1993

DEFLECTIONS

Data from Top Gages

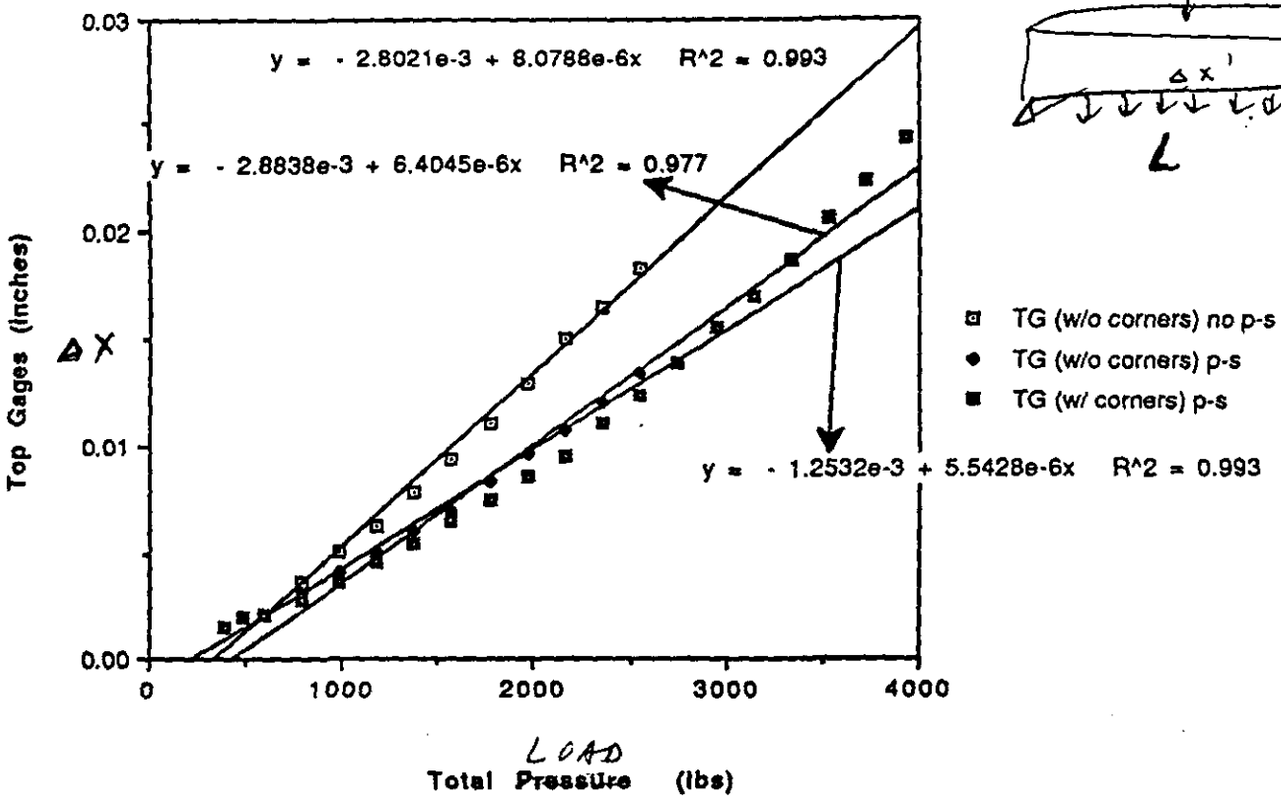

Data from Bottom Gages

ΔX'

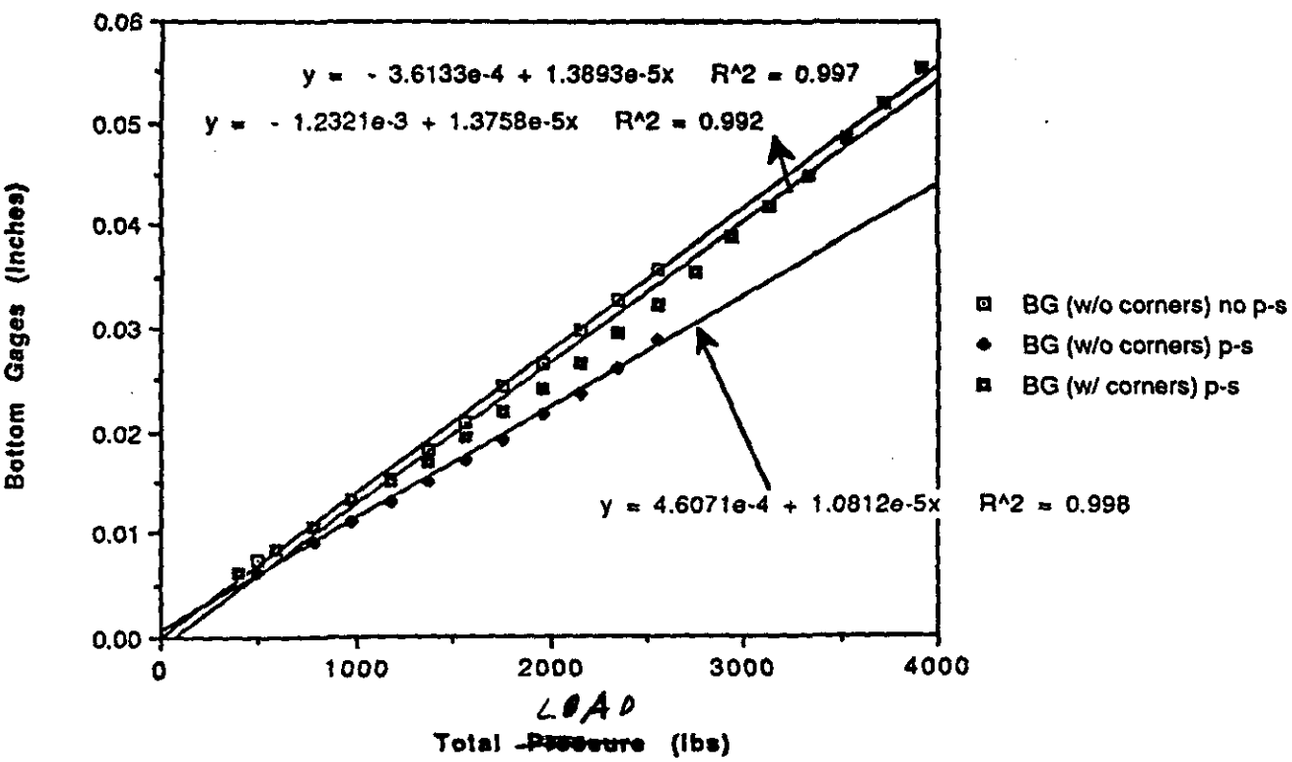

90 June 14, 1993 DEFLECTIONS

= 4000 lbs = 6000 lbs total

Comparison 200 PSI Run and 300 PSI Run For Bottom Gage

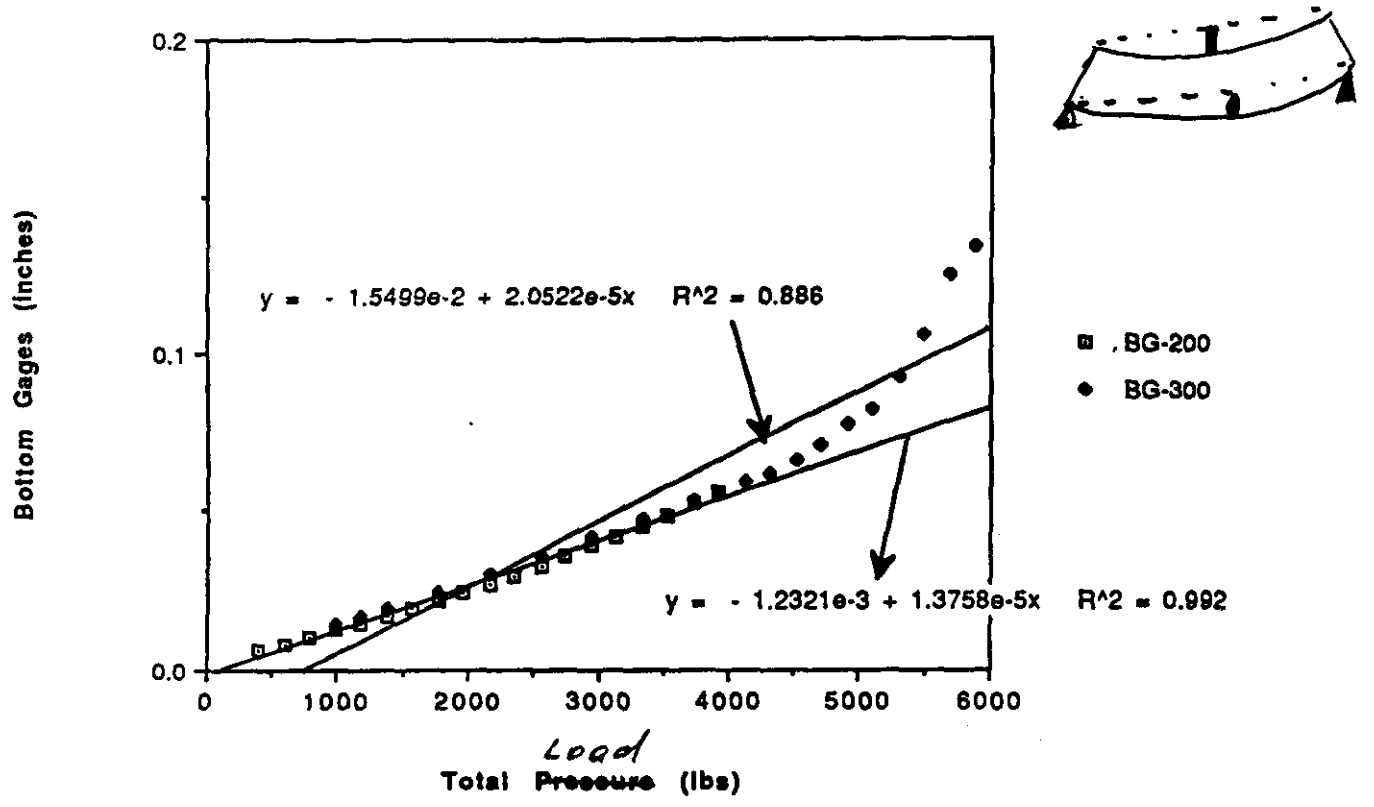

Comparison 200 PSI Run and 300 PSI Run For Top Gage

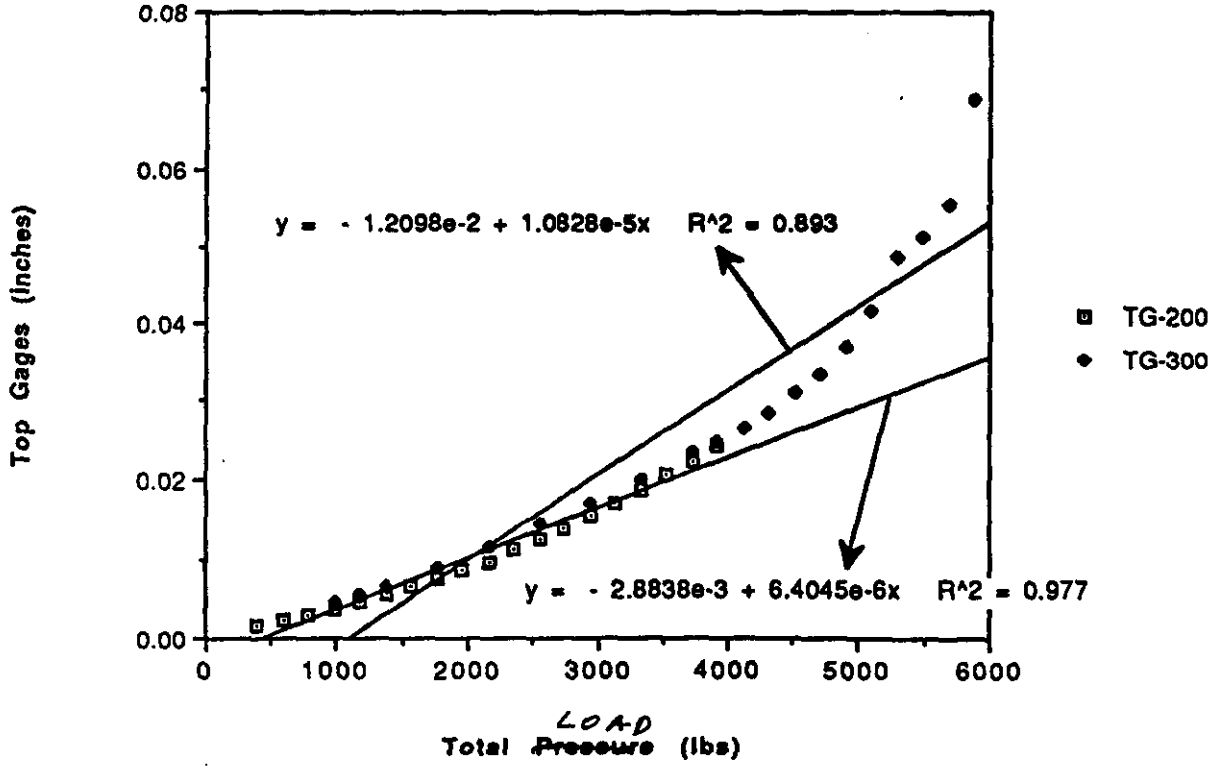

High Voltage breakdown tests

G-10 - along the surface

gap between pads	0.020	0.040	0.080	inches
First current range	2.2-3.2	2.7-4.6	4.0-5.8	kV
(average)	3.02	4.32	5.31	kV
Breakdown	2.7-3.2	4.3-4.9	5.7-6.1	kV

7 independent measurements each

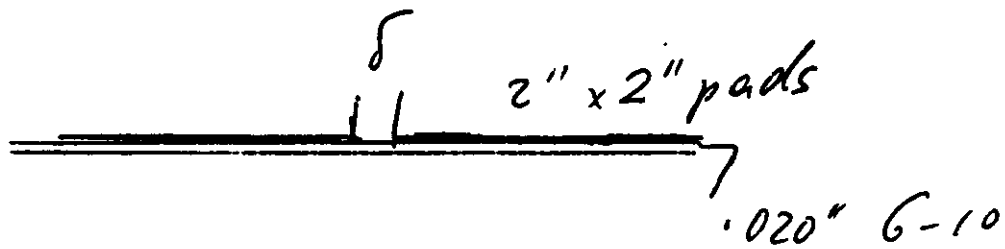

Differential shrinkage between materials

From 293 K to 77 K.

MATERIAL	delx/x	
6061 Alu - 2024 Alu	1.0 E-4	+/- 30%
6061 Alu - (70-30 Brass)	3.2 E-4	+/- 20%
2024 Alu - (70-30 Brass)	2.8 E-4	+/- 20%
70-30 Brass - Copper	4.2 E-4	+/- 20%

Material on the left shrinks more

Proposal for End Cap Hadronic Module Test (#2)

Put beam into ~~[illegible]~~ full End Cap ~~[illegible]~~ Inner Hadron modules near the beam line.

Requires reloading cryostat.

Figure shows arrangement of 6 modules, 2 layers deep, with special orientation of 2 modules to act as shower catcher.

This would be run after the barrel/end cap test now being planned.

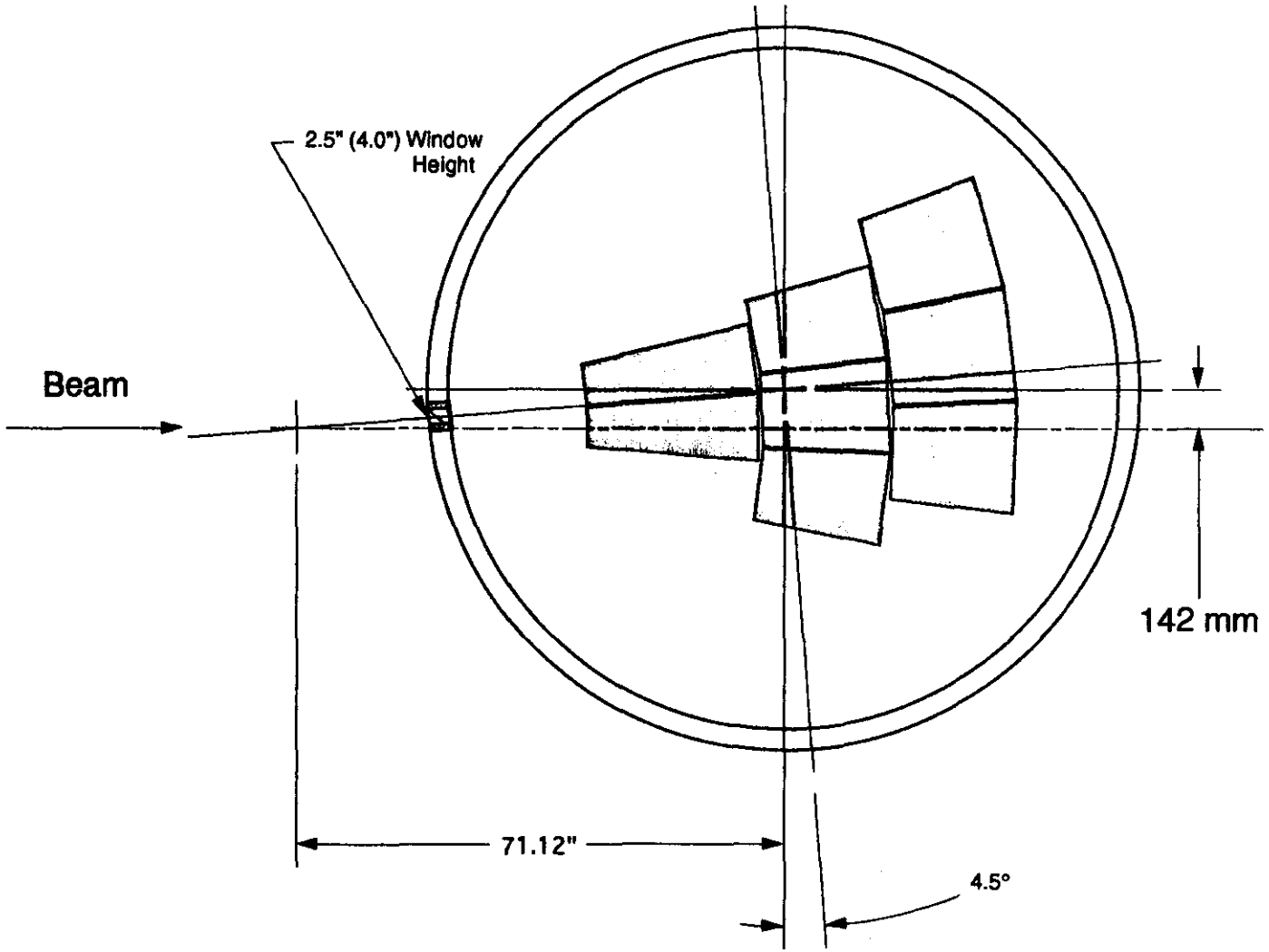

GEM Test Dewar with barrel and endcap calorimeter modules

500 mm

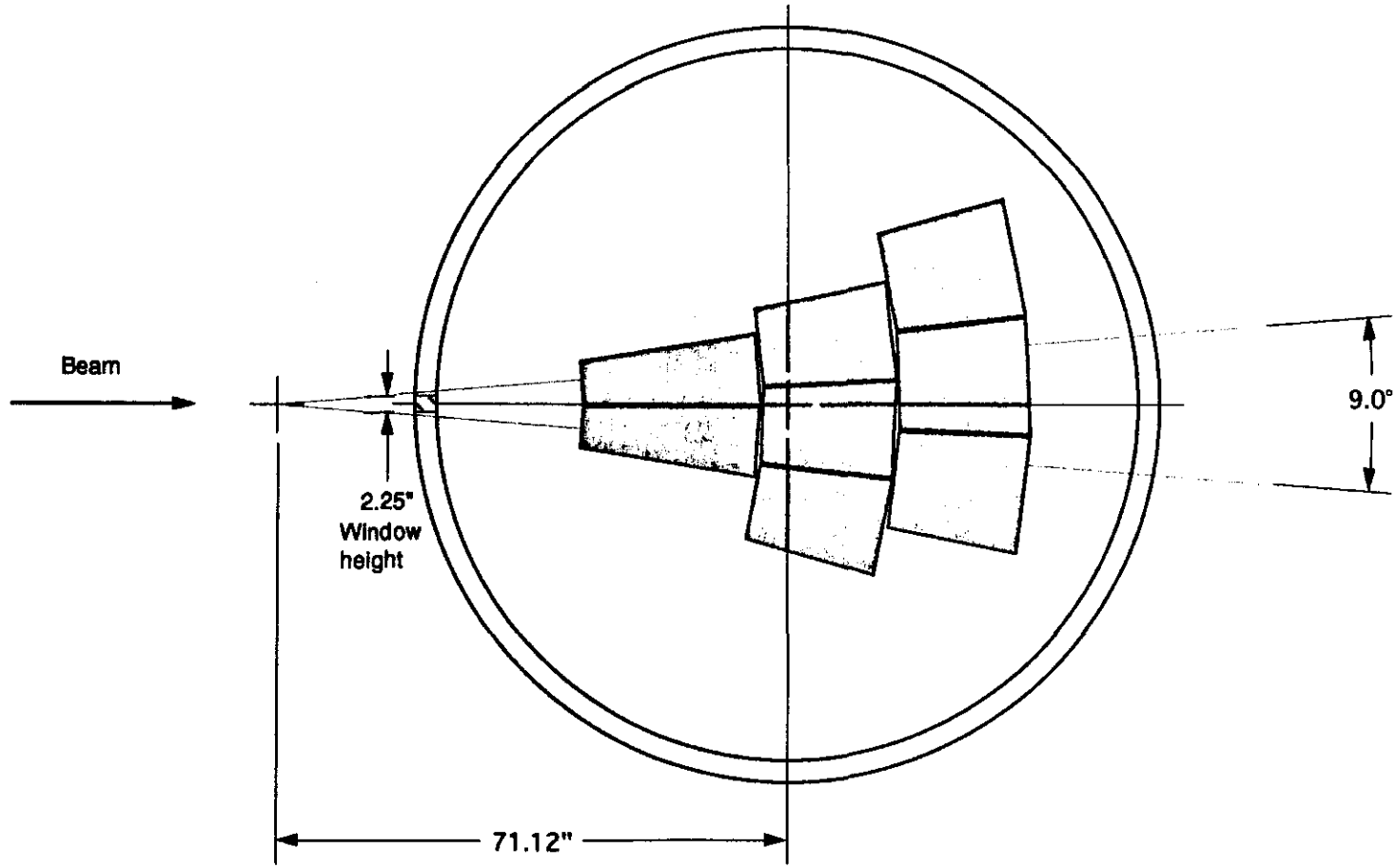

GEM Test Dewar with barrel and endcap calorimeter modules

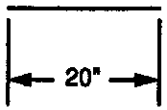

Tank O.D. = 103"
I. D. = 97"

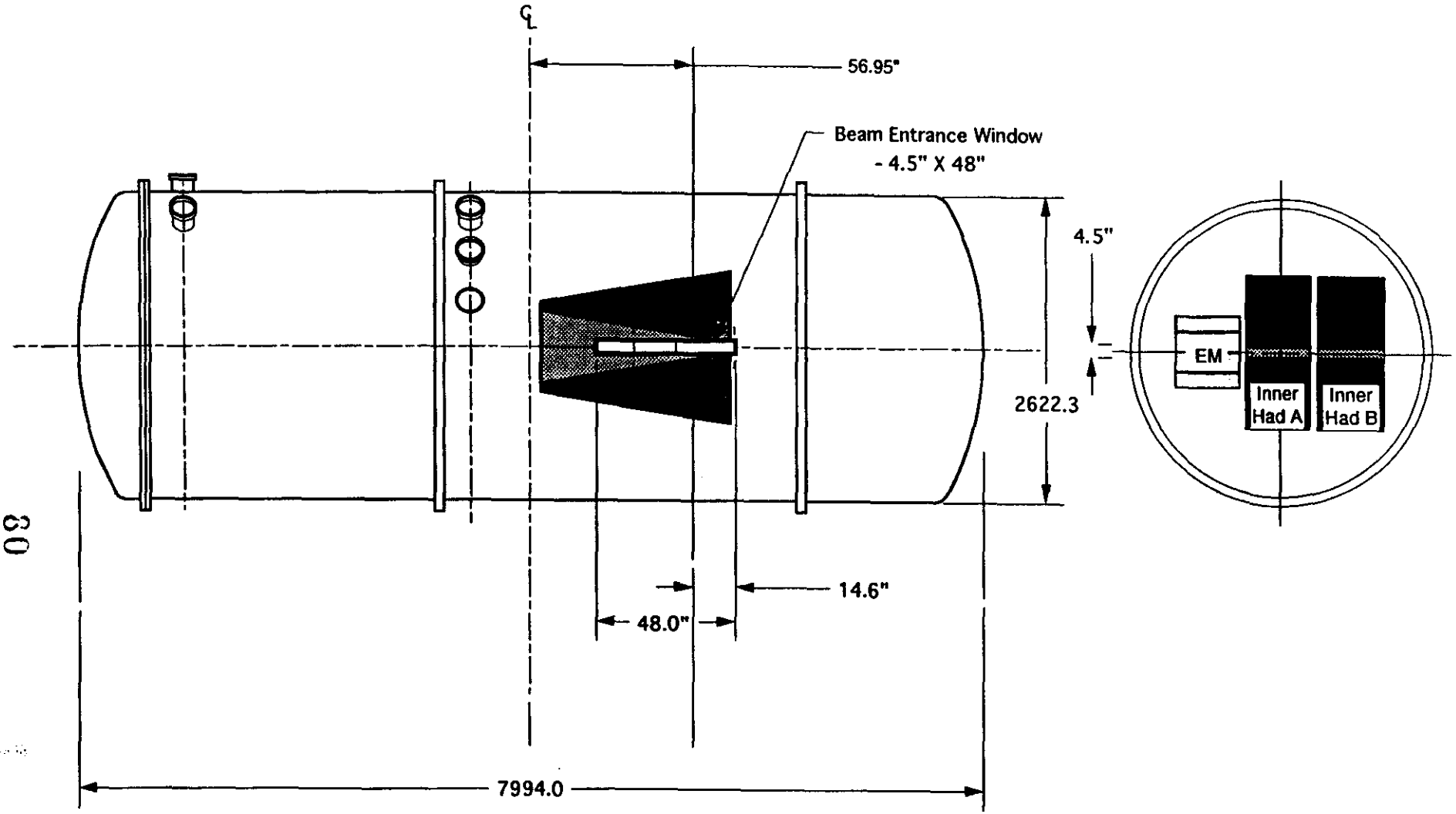

GEM Test Dewar with Endcap Calorimeter modules
-Inner Hadron A, elevation

6/14/93
Univ. of Washington
DAF

All dimensions in millimeters unless otherwise noted

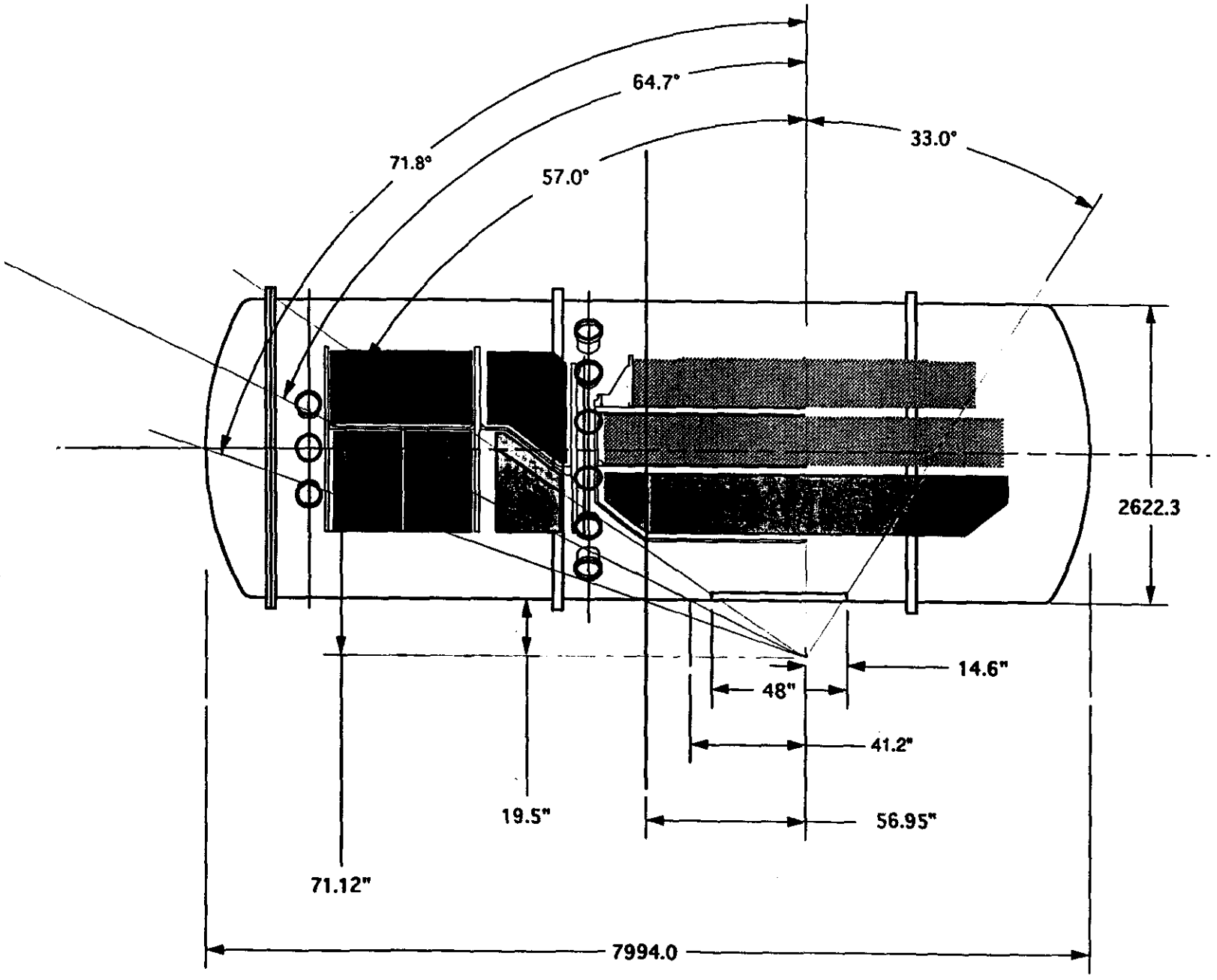

GEM Test Dewar with barrel and endcap calorimeter modules
-Plan view

6/14/93
Univ. of Washington
DAF

All dimensions in millimeters unless otherwise noted

June 17 K. Morgan

Central Tracker Test Beam Program

BNL 93 July 12 - 31

3 full size barrel IPC prototypes - 70 channel.
4 to 6 Si layers for telescope - full inst.
6 layers end cap study chambers - full electron
articulated support / transporter

Resolution as function of position F/S prototype barrel
Resolution as function of incident ϕ angle
Limited 2-track studies

no magnet
low rate

BNL 94 Feb - April

Full sized End Cap IPC's
+ all above as needed
+ 1000 channels electronics

Resolution as function of position End Caps
Resolution as function of incident θ angle
More 2-track studies

Indiana University - now stab at high rate over small area
Cosmics + strong source in magnet barrel proto.

FNAL FY '95

⇒ High rate over ~30 cm² DAQ in primary beam locatio ?
Multitrack resolution
Tracking support for 18° sector test
how close can we come to calorimeter?
how much material lies between tracker + cal?
how many channels of electronics will there be?
where is the magnet?

Muon Tracker Testing.

Goal:

TTR → MTT

F. Stocker
TB-mtg. FNAL
6/17/9

Muon Tracker Testing

2 tasks:

- small chamber
  full stack of 6 layers
  on manipulator in B-field.
- large (full scale or ~ 2/3) tower
  behind magnet
  3 superlayers, including
  alignment system.

Gena (8 days ago):
details/priorities/schedule not
yet established.

memo of George urging...

Who is doing what

- Carl Bromberg manipulators
  sketch available
  no engineering yet (manpower, funding)
- George Ginther monitoring temp. in hall.
  ↳ - enclose complete tower including manipulator
  or
  - additional aircond.
- X... build 6 small chambers
- Y... build 18 chambers for 3 super layers
- Z... 2 manipulators, electronics

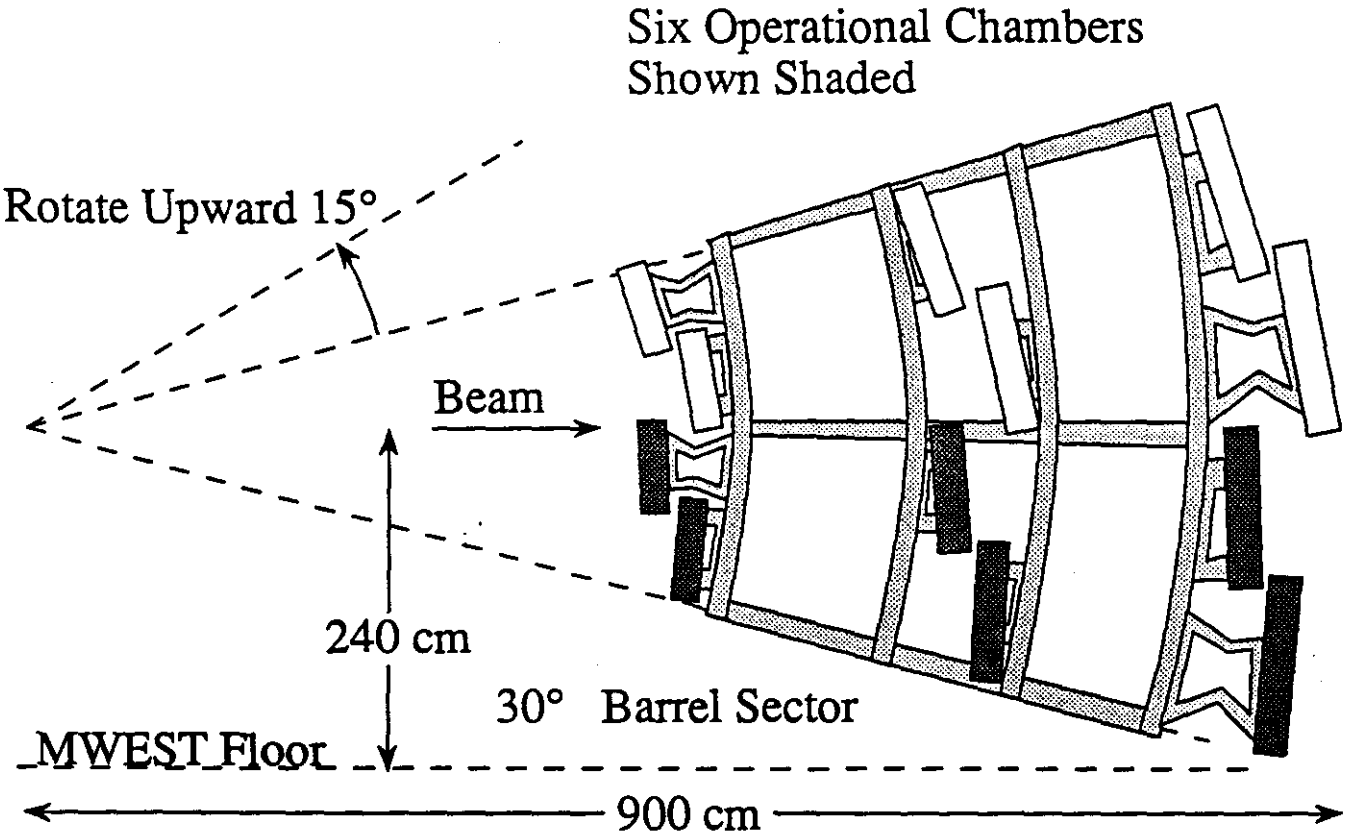
Six Operational Chambers
Shown Shaded
Rotate Upward 15°
Beam
240 cm
30° Barrel Sector
MWEST Floor
900 cm

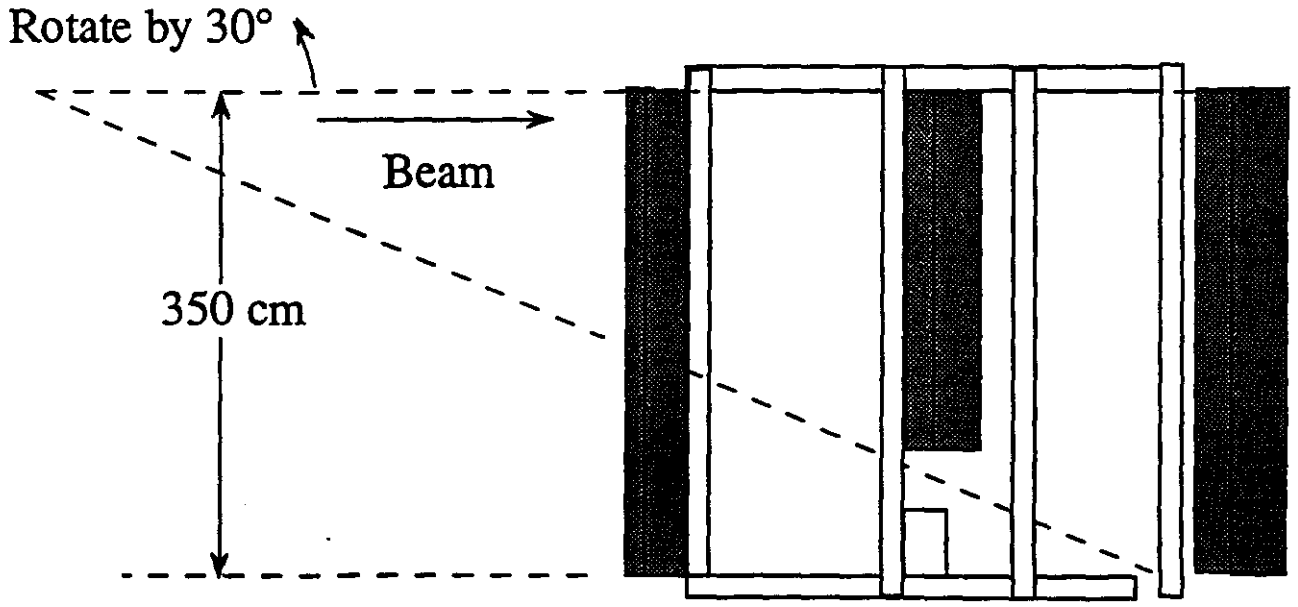
Rotate by 30°
Beam
350 cm

Cathode-Strip Chamber Tests
GEM Muon Detector

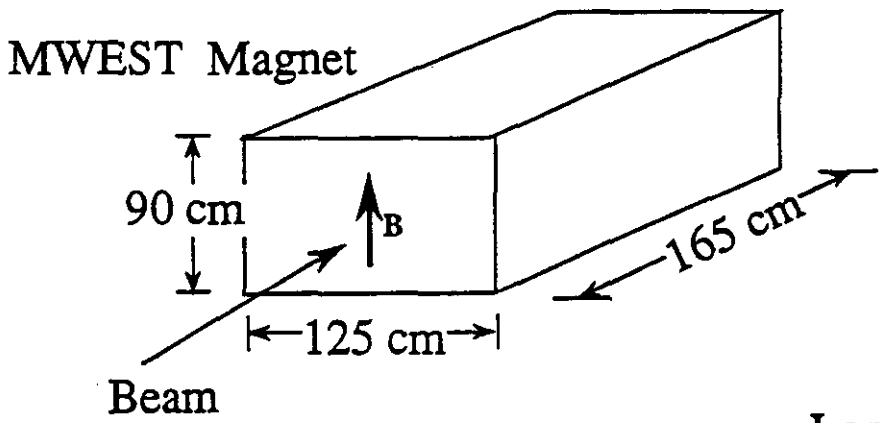

Six-Plane Chamber

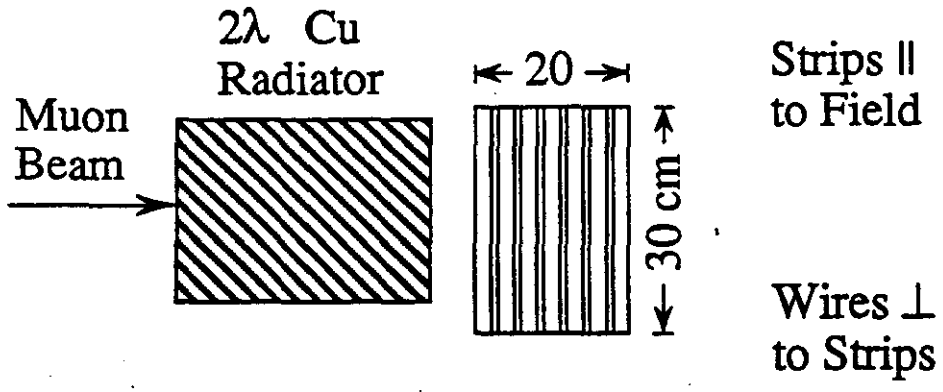

Lorentz Angle and Resolution Studies

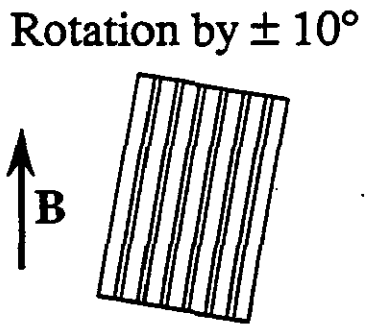

Resolution Studies from 0 to 50° Polar Angle

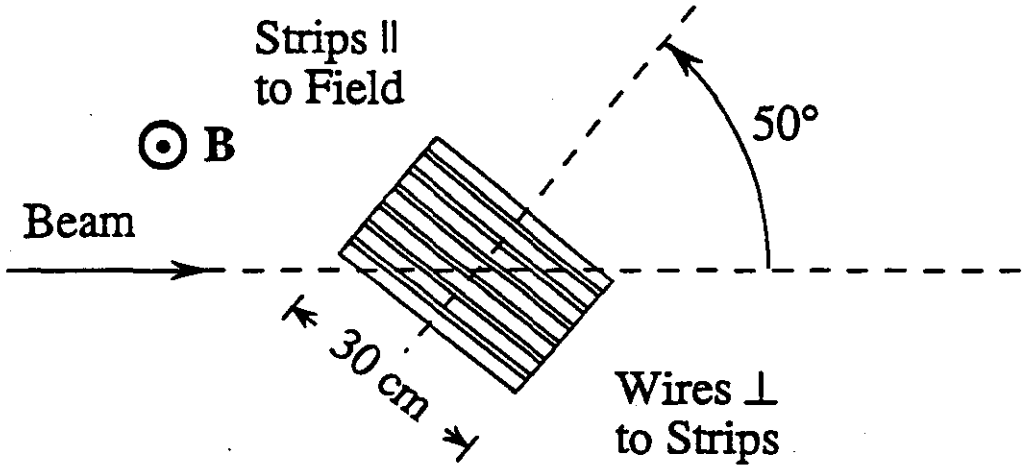

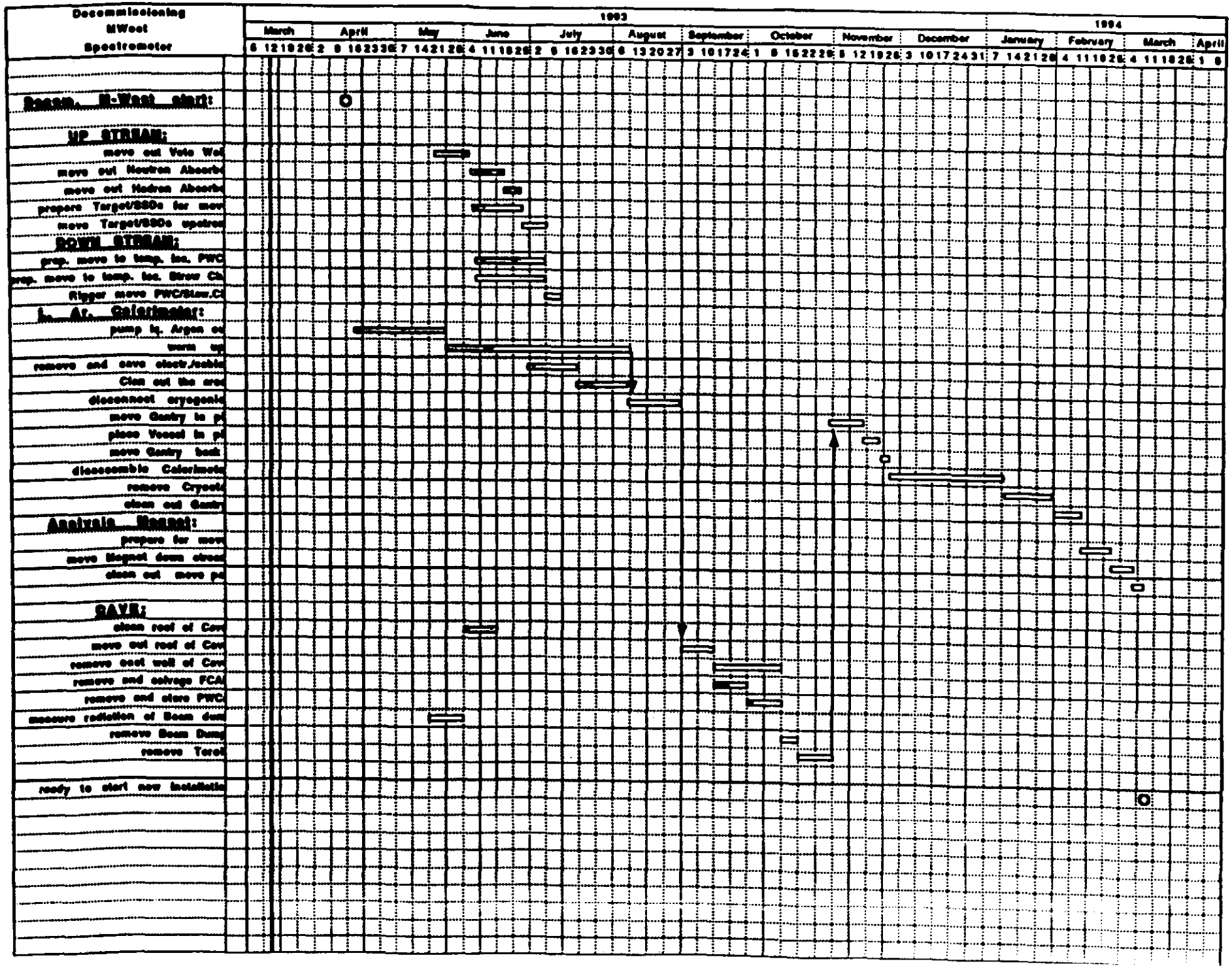
Decommissioning
MWest
Spectrometer
1993
1994
March
April
May
June
July
August
September
October
November
December
January
February
March
April
Decom. M-West start:
UP STREAM:
move out Veto Wal
move out Neutron Absorb
move out Hadron Absorb
prepare Target/SSDs for mov
move Target/SSDs upstrea
DOWN STREAM:
prep. move to temp. loc. PWC
prep. move to temp. loc. Straw Ch
Rigger move PWC/Straw.Ch
L. Ar. Calorimeter:
pump lq. Argon ou
warm up
remove and save elect./cable
Clean out the area
disconnect cryogenic
move Gantry to p
place Vessel in p
move Gantry back
disassemble Calorimeter
remove Cryost
clean out Gantr
Analysis Magnet:
prepare for mov
move Magnet down stream
clean out move pa
BAYE:
clean roof of Cav
move out roof of Cav
remove east wall of Cav
remove and salvage FCA
remove and store PWC
measure radiation of Beam dum
remove Beam Dump
remove Tarot
ready to start new installatio

Layout of the MWest Experimental Hall

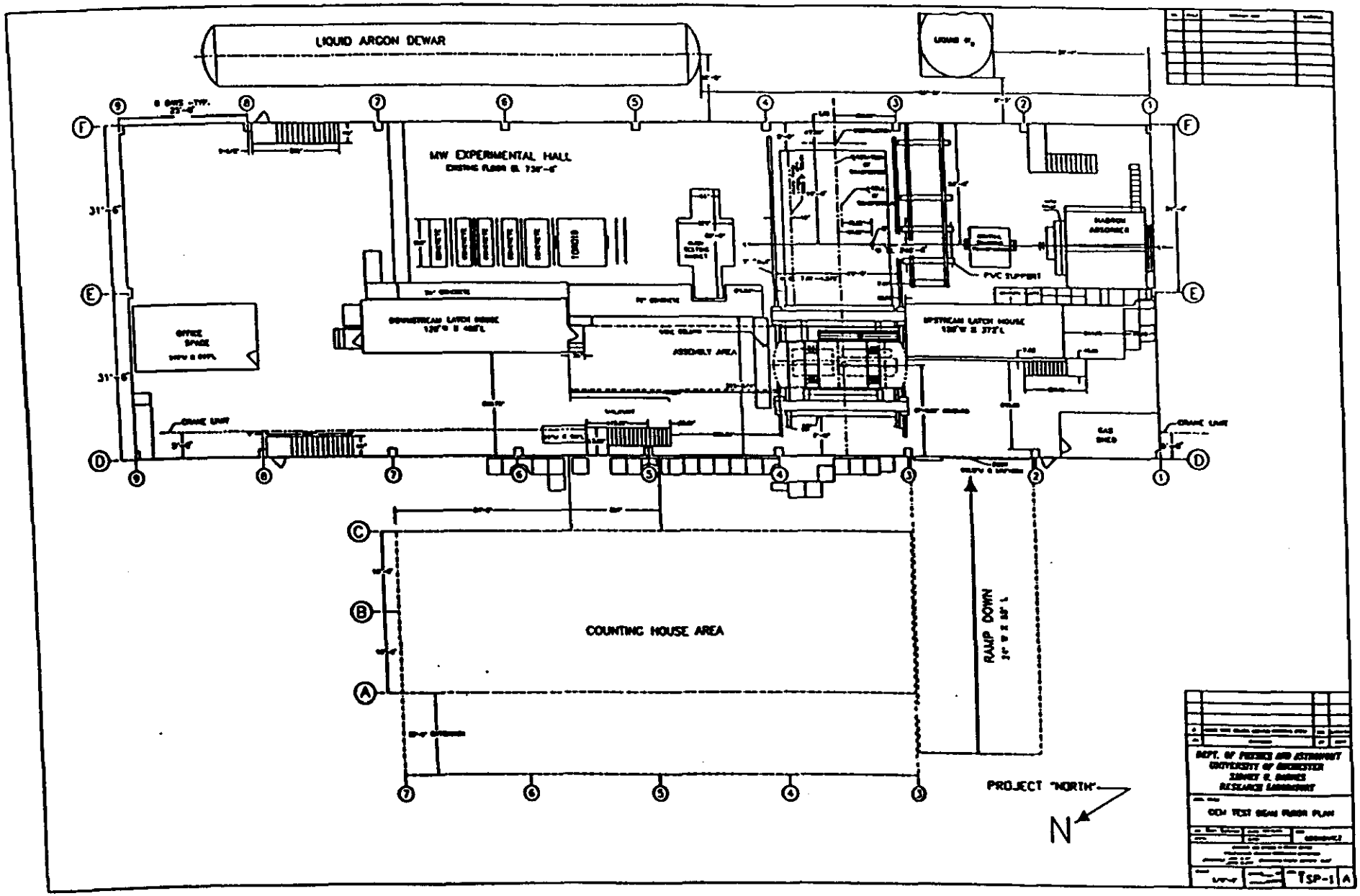

Slattery
4/28/93

Test Beam Rate Requirements

- Upstream Tracking - Old tracking 500 words/event
- Additional beam line instrumentation - 100 words/event
- Calorimeter test - Two 9° slice - EM and HC 3200 channels x 5 samples (all channels read out/event) = 16000 words/event /5 16 6 7

  Initial calorimeter readout may be <u>one sample</u> and FASTBUS readout.
- SCIGEM - 100 words out/event
- Muon Test - full detector ~~is~~ 1 million channels - test may be 1/64 piece or 16,000 channels. How many channels read out/event? 10%? 1600 channels? 3000 x2
- Control and triggers 100 words/event
- ≈18,000 words/event read out.
- 100 events/sec trigger rate = 1.8 million words/sec = 7.2 Mbytes/sec out.
- 2.4 Mbytes averaged over spill. /sec /Fermilab cycle

Antonio Morelos 10Jun93 10:03

Since a user may actually login at any computer the LINES are for policy !

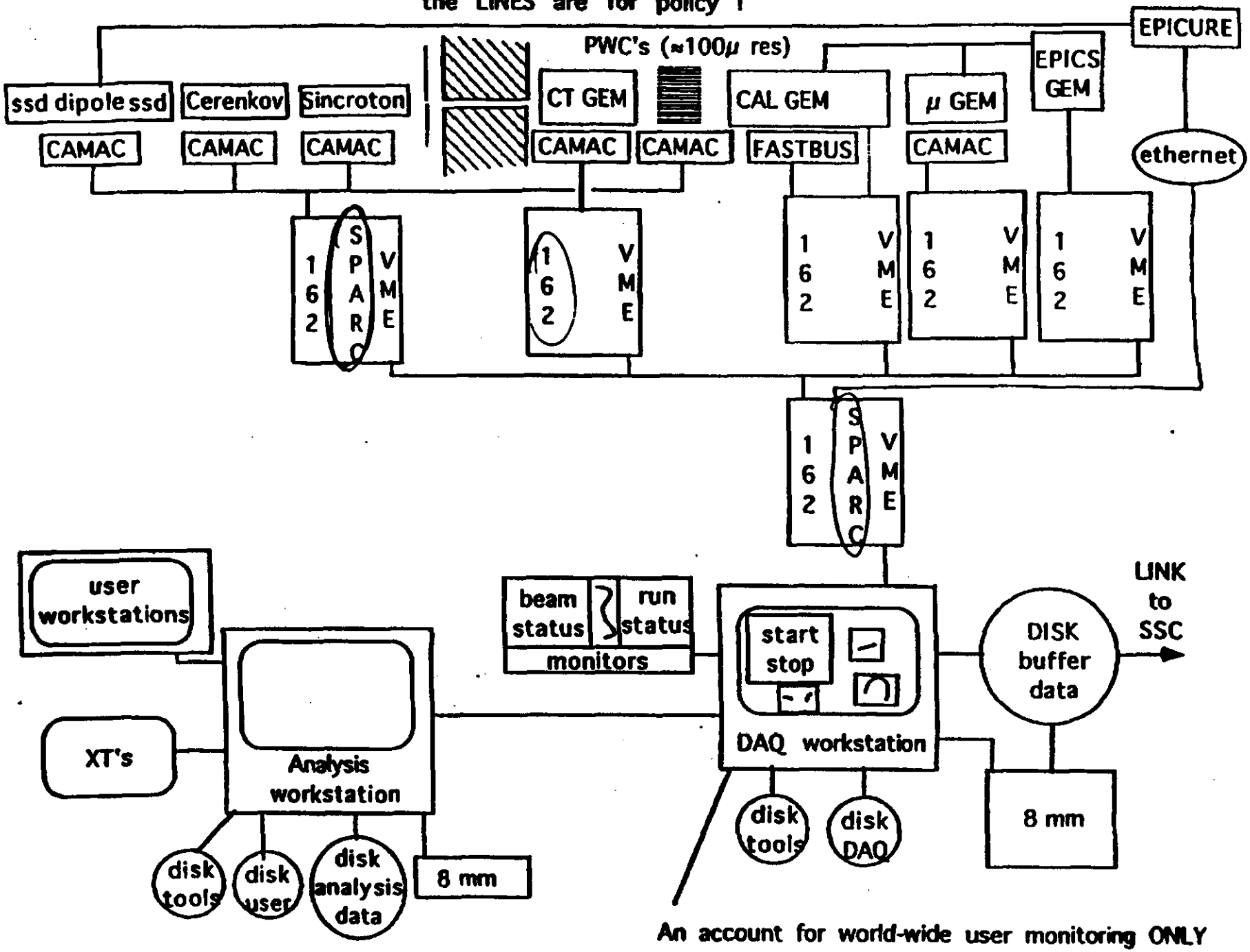

An account for world-wide user monitoring ONLY

What kind of DA system?

1) Based on TTR (PRDAQ)
   VME/VxWorks based
   Some familiarity within GEM
   SSC support
   No local support
   Lack of strong commitment from PRDAQ group.

2) Based on Fermilab DART
   Local Support
   Access to Fermilab test areas
   Set of DA tools that must be ready for beam in 1995
      e.g. VME CAMAC interface, VME FASTBUS interface, event builders, run control.
   Cost is 2 FTEs working 50% on DART specific tasks.

3) Based Purely on EPICS
   VME/VxWorks based
   Lots of people working on it.
   Future GEM standard for **slow** controls
   Not designed for fast DA

4) Other systems

July 1 requirements —

July 8 & 9th meeting

SSCL role in GEM Test Beam DAQ

Michi Botlo's point of view

1) Work on requirements and design. should be done NOW.

2) See how the SSC DAQ-system (see paper at rt-93), and any other available system fits in. [1 week?]

3) decide what pieces should be taken from other places. (such as FSCC & drivers, other interfaces [DART and CERN], data logging (new exabyte 8505 or CERN-STC tapes).

4) Slow controls: Help in EPICS + integration with DAQ ; alternatively help in using Labview environment (that's a cost question, he believes ; EPICS tends to be expensive for the performance it delivers.)

Proposes we have a workshop to discuss point 1 , then the best mixture of SSC-DART.

Requirements are very important for SSC-DAQ are very important.

Even if GEM selects DART his group can collaborate on specifics (as DART might do if the SSC approach is selected)

The SSCL DAQ commitment could be substantial if we work on well defined and focused goals.

SSCL GEM Test Beam Computing Group

- Formed recently by K. McFarlane through GEM Computing Subsystem

- Current members:

  V. Glebov
  A. Morelos
  H. Uijterwaal
  G. Word
  Y-Z Zhou
  (K. McFarlane)

- Support from:

  PRCD (L. Cormell, ...)
  DAQ ? (D. Marlow, —)
  GEM Project (hire in progress)
  LANL AT-8
  GEM Computing Subsystem

TB Comp. Grp.

- Tasks:
  - Coordinate SSCL's TB comp. HardWare & Software activities
  - establish clear interfaces with other groups
  - recommend hardware and software standards to ease TB integration and provide evolutionary path to final GEM computing system

TB System Design:

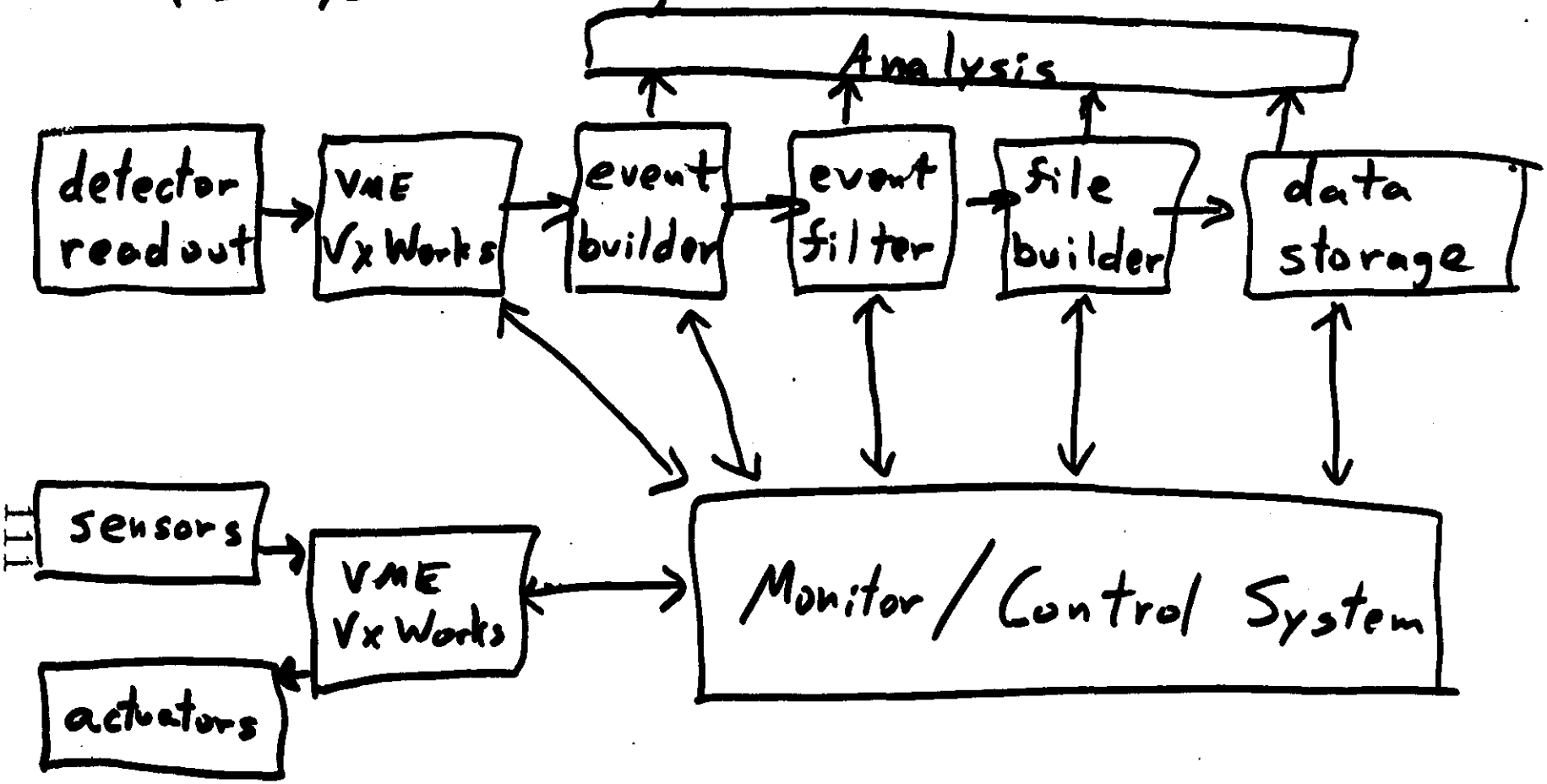

TB Computing Group Participation:

- DAQ (Morelos, Word)
  - participate in system selection
  - " " " integration
  - assist in negotiation of SSCL collaboration with non-GEM groups

- Monitor and Control System (Glebov, Word, Uijterwaal, Morelos, the LANL AT8 (Carl Timmer))
  - procure funds for and monitor LANL-AT8 Testbed resources (recently added $50k)
  - assist in creation of MCS

- Event Building / Filtering / File Building (Glebov, Word, Uijterwaal, PRCD)

- Data Storage System (Wood, PRCD)
  - specify and procure storage system hardware and software

- Analysis (Computing Subsystems Framework Group, PRCD)
  - provide framework in which analyses can be performed
  - provide tools to optimize access to data based of task requirements

Select comments on Manipulator:

- Carl Timmer responsible for:
  - position sensors
  - readout of sensors
  - controls
  - motor drivers
  - specs to Dan Spiesak
- Timmer will continue to assist with EPICS in general.
- GEM has paid for 2 man-months of LANL time, spread out over this FY
- SSCL Group B will have delivered an EPICS System (VME, VxWorks, motors, sensors, EPICS package, Sun Sparc 10, and EPICS demo package) soon, ~2 wks.

- File Builder
  - collects contiguous, common events
  - merges run-condition data into event stream ~~for~~ into database
  - creates files in the "final" form, one or more per run
  - file size expected to be ~ 0.1 – 0.5 GB in size (not greater than 0.5 GB)
  - may handle up to ≲ 3 MB/s

Data Storage System Design:

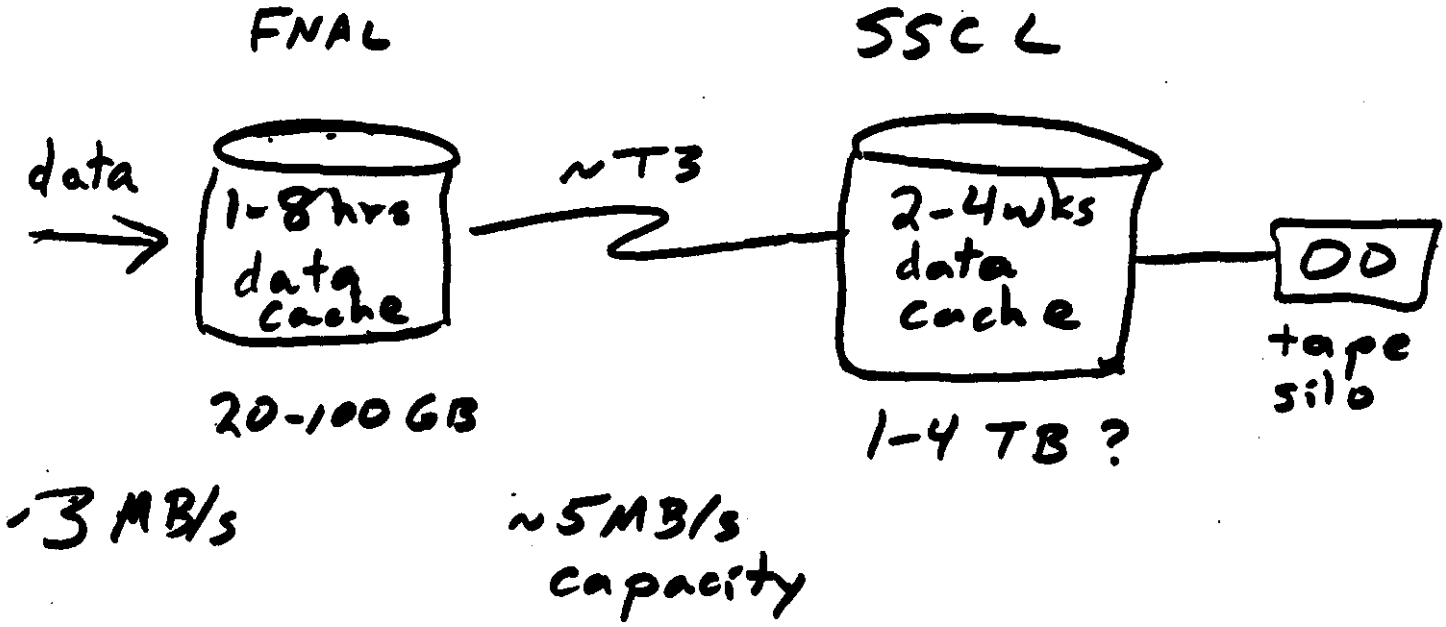

Design Goals/Directions:

- central data repository (minimize copies of data)
- common access to data for online, reconstruction, DST creation analysis
- transparent access to data; data files are migrated to/from tape by storage system
- optimized analysis (automatic process/data migration)

Superconducting Super Collider Laboratory
2550 Beckleymeade Avenue, Mail Stop 2003
Dallas TX 75237-3946
(214) 708-6061
Fax: (214) 708-0006

Physics Research Division - Computing Department

Memorandum

To: A. Fry, I. Gaines, K. McFarlane, J. Siegrist, G. Word, G. Yost

From: L. Cormell

Subject: GEM and SDC Test Beam Requirements

Date: June 2, 1993

The Computing Department is in the process of developing a plan for the computing support efforts for the 1995 test beams at Fermilab, both in terms of hardware and software. In order to develop this plan we need to know the requirements from GEM and SDC as soon as possible. At the previous meeting on test beams, we identified several items that needed clarification before we can progress with the plan:

Data Rate: The I/O rate of raw data from the "detector", both "peak" rate and the average rate.

Expected Duty Factor: What is the expected duty factor of the accelerator?

Transfer rates: The I/O rate of data copied (or transferred) from FNAL to SSCL. What is the "peak" I/O rate required and the total I/O rate.

File size: The size of the data files copied across the network, and the size of the files that will be stored on the mass storage system (if they're not the same).

Mass Storage: What exactly are the Mass Storage requirements? What is the total estimated data that will be generated? How much will need to be stored at FNAL and at SSCL? How much of the data must be robotically accessible?

CPU requirements: What are the CPU requirements for:
- Analysis @ SSCL?
- Analysis @ FNAL?

Analysis Mode: How exactly will the test beam data be analyzed. We will also need to know the following:
- How will files be used and distributed?
- Do we need high end graphics?
- What is the access time needed (i.e. how quickly will a user need access to a file)?
- For a typical analysis what is the expected ratio of instruction/byte input (i.e. are the jobs I/O or cpu intensive).

Copying data: How much data will be copied and distributed around to the collaborations? How will the data be distributed? Tape? Network?

Our intention is to prepare a draft plan by July 1. Could you please respond to Soren Frederiksen

D R A F T D R A F T D R A F T

Memo

To: K. McFarlane
>From: I. Sheer, J. Womersley, G. Word
Re: List of Computing Subsystem Projects
Date: May 28, 1993

There are two main strands to the Computing Subsystem effort, namely the detector simulation and event reconstruction effort and the effort to evolve all of the computer software and hardware systems that will be required for the final GEM detector. The evolution effort will use the GEM Test Beam at FermiLab as its next step.

Below we list some of the Computing Subsystem projects which support these two efforts. We include an estimate of the timescales of the projects which is driven by the expected start date of the Test Beam run at FermiLab, which is 3/95. Note that THE CHOICES MADE BY THE INDICATED TIMESCALES ARE TO BE VIEWED AS WORKING DECISION FOR THE TEST BEAM 1995 EFFORT and NOT binding on, for example, the expected Test Beam effort in 1997 that may occur at the SSC Laboratory. We also include some of the people who are expected to work on the projects.

The Detector Subsystems Group mentioned below is lead by S. McKee for the Tracker, J. Womersley for the Calorimeter, and R. McNeil and M. Atiya for the Muon subsystem. The Framework Group is lead by I. Sheer and G. Word. The Global Physics Group is lead by J. Womersley.

I) Framework Projects (coordinated by I. Sheer and G. Word)

1) Job Control Parameters
   Timescale: 5/93 -- 6(7)/93
   People: I. Sheer, G. Word
   Prerequisite:
   Description: Most programs need to have several parameters set at run time to control the operations of the program during job run. Examples are the number of events to generate, the file to use which describes the detector configuration, etc. A prototype tool exists, which is written in C++. It remains to be determined whether the prototype is sufficiently flexible to satisfy the requirements of the task.

2) Software Technology Choices
   Timescale: 5/93 -- 9/93 (some choices final) to 3/94.(all choices final)
   People: Framework Group, (+ SDC and PRCD)
   Prerequisite:
   Description: There is a long list of technology choices to be made so as to minimize the number of software packages that are required in the GEM environment. It is also important to attempt to choose the same technology as SDC, where feasible. This effort is being given high priority, since the technology choices will effect all software development. The areas in which a technology will be chosen include: IPC (inter-process communication), RPC (remote procedure calls), IDL (interface definition language), DDL (data description language), GUI (graphical user interface), CASE tools (computer-aided software engineering tools) and data base(s).

3) Data Modelling and Module Definition
Timescale: 9/93 -- 6/94
People: All groups
Prerequisite: Interface Definition Language; Data Description Language
Description: After the IDL and DDL are chosen, an integrated effort will commence to describe the input and output data of all of the software modules.

II) Detailed GEM Detector Simulation and Reconstruction projects (coordinated by J. Womersley):

1) Geometry Description Language and Tool
Timescale: 6/93 -- 12/93
Prerequisite:
People: J. Womersley, T. Burnett, M. Seman, (+ interest from SDC)
Description: Design a text-file language that can be used to describe a detector; build a tool to parse the language; provide the capability of making the appropriate calls to GEANT and other GEANT-like packages, such as the SLAC GISMO package, to instantiate the detector; eventually provide a method of modifying the detector description using graphical or menu-driven interfaces.

2) Describe GEM using the Geometry Description Tool
Timescale: 3/94 -- 9/94
Prerequisite: Geometry Description Language and Tool
People: J. Womersley, + each subsystem

3) Describe 1995 Test Beam setup using the Geometry Description Tool
Timescale: 1/94 -- 6/94
Prerequisite: Geometry Description Language and Tool
People: J. Womersley, G. Word, + each subsystem

4) Monte Carlo Generators and interfaces, including simulation of event pileup
Timescale: 5/93 -- 6(7)/93
People: I. Sheer, G. Word
Prerequisite:
Description: Provide a means by which Monte Carlo event generators can be used to simulate SSC interactions and produce generator-independent representations of the simulated interactions; provide a mechanism by which the interactions can be combined into an event and similarly events into events with pileup. The current project is to rewrite the GEMgen package in the C++ language and to switch from using Zebra to using other methods of data transport, such as Sun's xdr package.

5) Particle Transporter through the GEM detector
Timescale: ongoing -- 3/94
People: T. Burnett, G. Word, J. Womersley
Prerequisite:
Description: While GEANT is the current particle transporter used by GEM, this project is expected to evaluate whether other possibilities, such as the C++ GISMO application that is being developed by a SLAC-based group, could be used for the 1995 Test Beam effort as well.

6) Digitization
Timescale: 3/94 -- 12/94
People: Detector Subsystem Groups
Prerequisite: Describe Test Beam setup using the Geometry Description

Tool; Data Modelling and Module Definition
Description: Each subsystem will provide routines that simulate the digitized responses of their subsystem to SSC events.

7) 3D Event Display
Timescale: 10/93 -- 6/94
People: T. Burnett, G. Word
Prerequisite: Selection of GUI technology; Geometry Description
Description: Provide a 3D visualization tool that permits real-time rotation of the detector shell, detector digitizations and particle traversal through the detector.

8) Full GEM Reconstruction
Timescale: 3/94 -- 12/94 (at least Test Beam part)
People: Detector Subsystem Group
Prerequisite: Geometry Description; Digitization
Description: Each of the subsystems will provide code that interprets the detector digitizations and produces event hypotheses. The Detector Subsystems Group and the Global Physics Group will provide the code which integrates the subsystems code into global event hypotheses.

III) Test Beam (TB) specific projects (coordinated by G. Word):

1) TB Global Control System
Timescale: 6/93 -- 12/94
People: V. Glebov
Prerequisite:
Description: The global control of the partial-detector in the Test Beam will mainly be accomplished through the use of the EPICS system.

2) TB Data Acquisition / TB Online
Timescale: 6/93 -- 12/94
People: A. Morelos, J. Branson, J. Dunlea
Prerequisite:
Description:

3) TB Reconstruction
Timescale: 6/94 -- 12/94
People: Detector Subsystem Group
Prerequisite:
Corequisite: Full GEM Reconstruction
Description: The reconstruction project for the Test Beam should re-use the same code as is used in the Full GEM Reconstruction, plus some additional code that will be required by the unique Test Beam setup.

4) TB Database(s)
Timescale: 1/94 -- 6/94
People: G. Word
Prerequisite:
Description: Choices will need to be made about which databases should be used for the Test Beam project. The number of databases is expected to be minimized. Special-purpose databases are expected to be discouuraged.

5) Calibration Studies
Timescale: 1/94 -- 9/94
People: Hong Ma (BNL)
Prerequisite: Digitizations
Description: Studies will need to be performed on how the data collected

at the Test Beam can be used for calibration purposes, especially for the calorimeter components.

6) Mass Storage
   Timescale: 6/93 -- 6/94
   People: J. Hilgart, G. Word, L. Cormell
   Prerequisite:
   Description: The means by which the Test Beam data will be stored on and accessed from tape will be provided by this project.

From GLEBOV@SSCVX1.SSC.GOV Wed Jun 16 10:07:27 1993
Return-Path: <GLEBOV@SSCVX1.SSC.GOV>
Received: from SSCVX1.SSC.GOV by pdsf.ssc.gov (4.1/SMI-4.1)
id AA12091; Wed, 16 Jun 93 10:07:26 CDT
Date: Wed, 16 Jun 1993 10:09:34 -0500 (CDT)
From: "Vladimir Glebov, MS 2005 SSCL, (214)-708-6321" <GLEBOV@SSCVX1.SSC.GOV>
To: word@pdsf.ssc.gov, "FNALV::MORELOS"@SSCVX1.SSC.GOV
Cc: GLEBOV@SSCVX1.SSC.GOV
Message-Id: <930616100934.20201fbc@SSCVX1.SSC.GOV>
Subject: Muon goals

SSCL, 16-JUN-1993

GEM Muon System goals for the FNAL test beam:

1. Test several small (30x30 cm**2) CSC prototypes in a 0.8 T magnetic field:

Lorentz angle studies

Resolution studies

2. Use beam to verify design parameters of a full-scale Muon sector:

Test full-size CSC chamber prototypes

Test Muon alignment system prototype

Test prototypes of Muon monitoring system

Test prototype of Muon gas system

Test prototypes of CSC electronics

From GLEBOV@SSCVX1.SSC.GOV Wed Jun 16 10:14:20 1993
Return-Path: <GLEBOV@SSCVX1.SSC.GOV>
Received: from SSCVX1.SSC.GOV by pdsf.ssc.gov (4.1/SMI-4.1)
id AA12155; Wed, 16 Jun 93 10:14:19 CDT
Date: Wed, 16 Jun 1993 10:16:27 -0500 (CDT)
From: "Vladimir Glebov, MS 2005 SSCL, (214)-708-6321" <GLEBOV@SSCVX1.SSC.GOV>
To: word@pdsf.ssc.gov, "FNALV::MORELOS"@SSCVX1.SSC.GOV
Cc: GLEBOV@SSCVX1.SSC.GOV
Message-Id: <930616101627.20201fbc@SSCVX1.SSC.GOV>
Subject: FNAL Slow Control requirements

SSCL, 16-JUN-1993

Requirements for the FNAL test beam Slow Control System

1. Control two transporters:
   a) small for prototypes inside magnet
   b) big for Muon sector fixture

2. Muon chambers (Muon Monitor Boards):
   a) electronics parameters
   b) LV power supply
   c) gas parameters
   d) tempratures

3. Muon alignment system

4. High Voltage system

5. Low Voltage system

6. Muon gas system

7. Alignment control motors

From GLEBOV@SSCVX1.SSC.GOV Wed Jun 16 10:09:13 1993
Return-Path: <GLEBOV@SSCVX1.SSC.GOV>
Received: from SSCVX1.SSC.GOV by pdsf.ssc.gov (4.1/SMI-4.1)
id AA12107; Wed, 16 Jun 93 10:09:12 CDT
Date: Wed, 16 Jun 1993 10:11:20 -0500 (CDT)
From: "Vladimir Glebov, MS 2005 SSCL, (214)-708-6321" <GLEBOV@SSCVX1.SSC.GOV>
To: word@pdsf.ssc.gov, "FNALV::MORELOS"@SSCVX1.SSC.GOV
Cc: GLEBOV@SSCVX1.SSC.GOV
Message-Id: <930616101120.20201fbc@SSCVX1.SSC.GOV>
Subject: FNAL DAQ requirements

SSCL, 16-JUN-1993

Requirements for the FNAL test beam Data Acquisition System

1. Possibility to calibrate CSC electronics (VERY IMPORTANT !!)

2. Data base for CSC electronics constants

3. Read out CSC electronics:

   About 6000 cathode strip electronics channels

   About 1800 anode electronics channels

   What kind of electronics? Depends from R&D progress:

   a) final prototype - on-chamber boards (see TDR)

   b) front-end AMPLEX, ADC in VME or VXI

   c) front-end AMPLEX, ADC in CAMAC

4. DAQ should have standalone and integrated possibilities

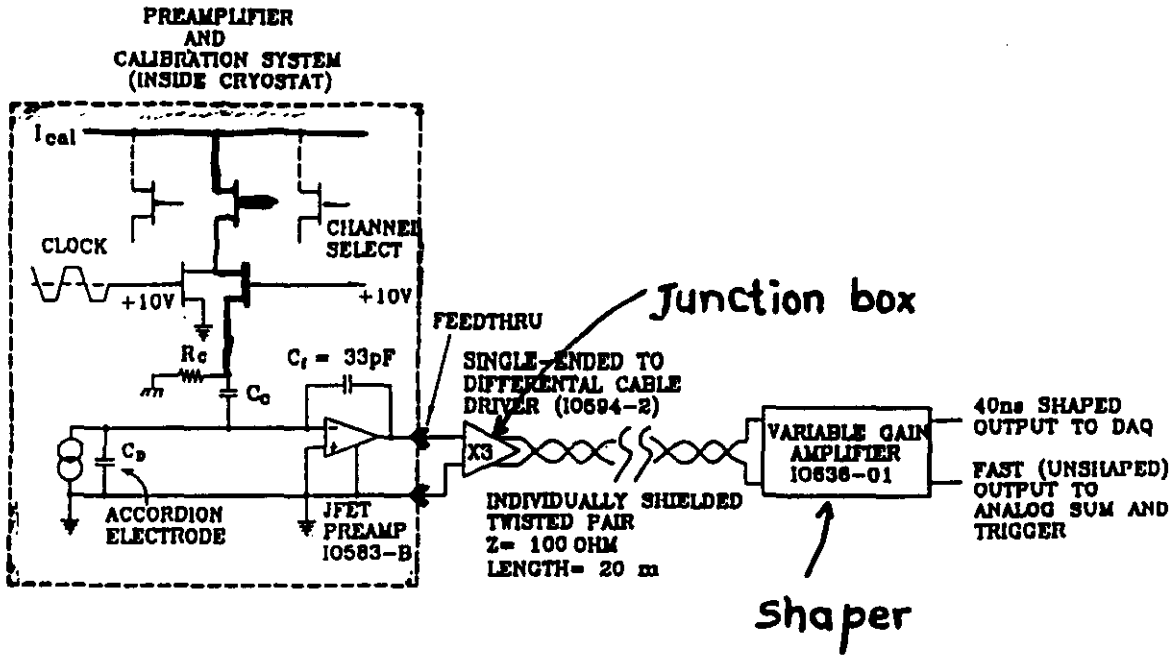

Calibration Lines:

a. Ical - precision current source
b. Channel Select - DC Level
c. Clock - $t_r \approx 3\text{-}4$ ns

EM Accordion Segmentation

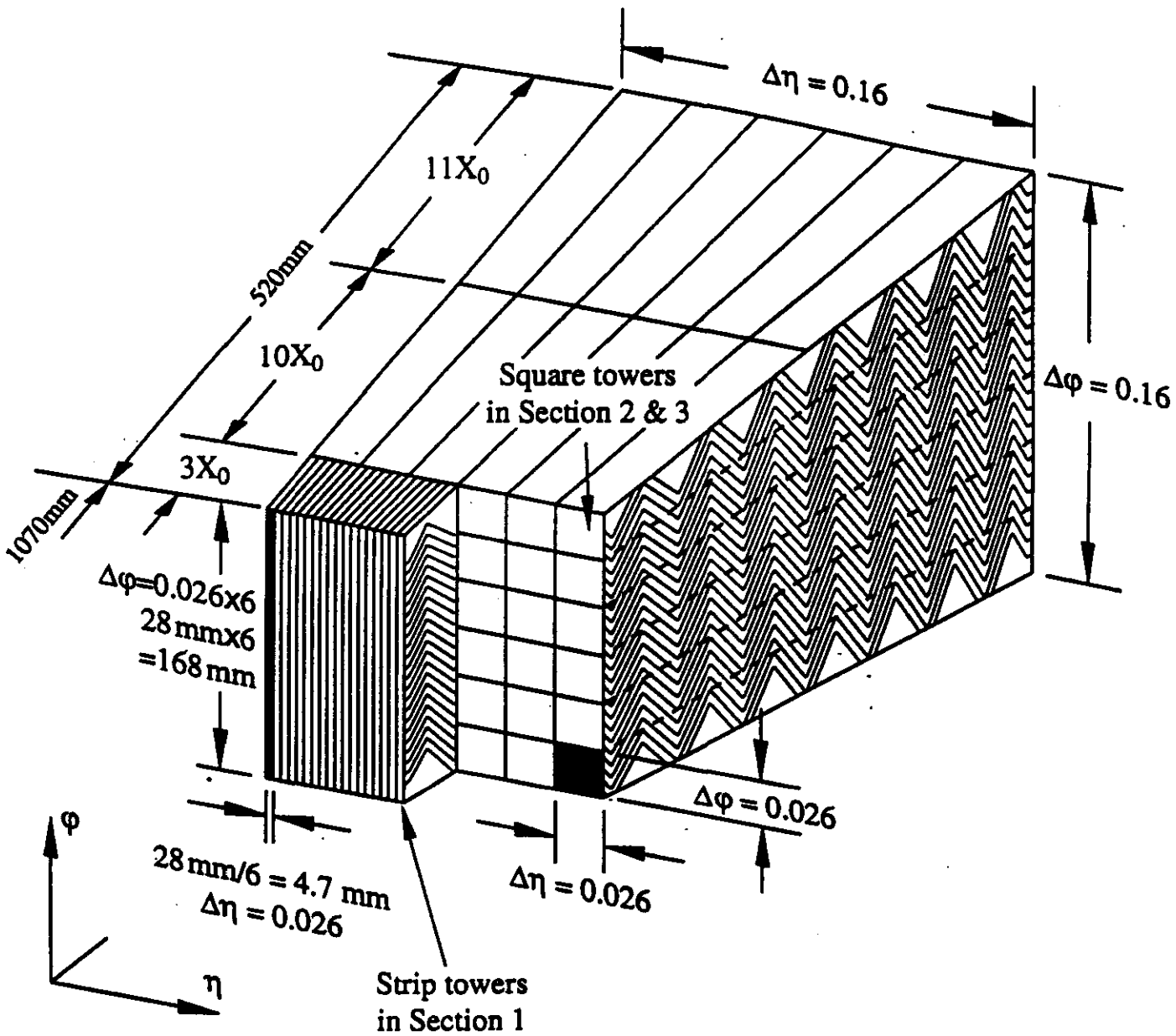

EM Accordion Electrodes
1st Section ($4X_0$), $\Delta\eta$ Strips

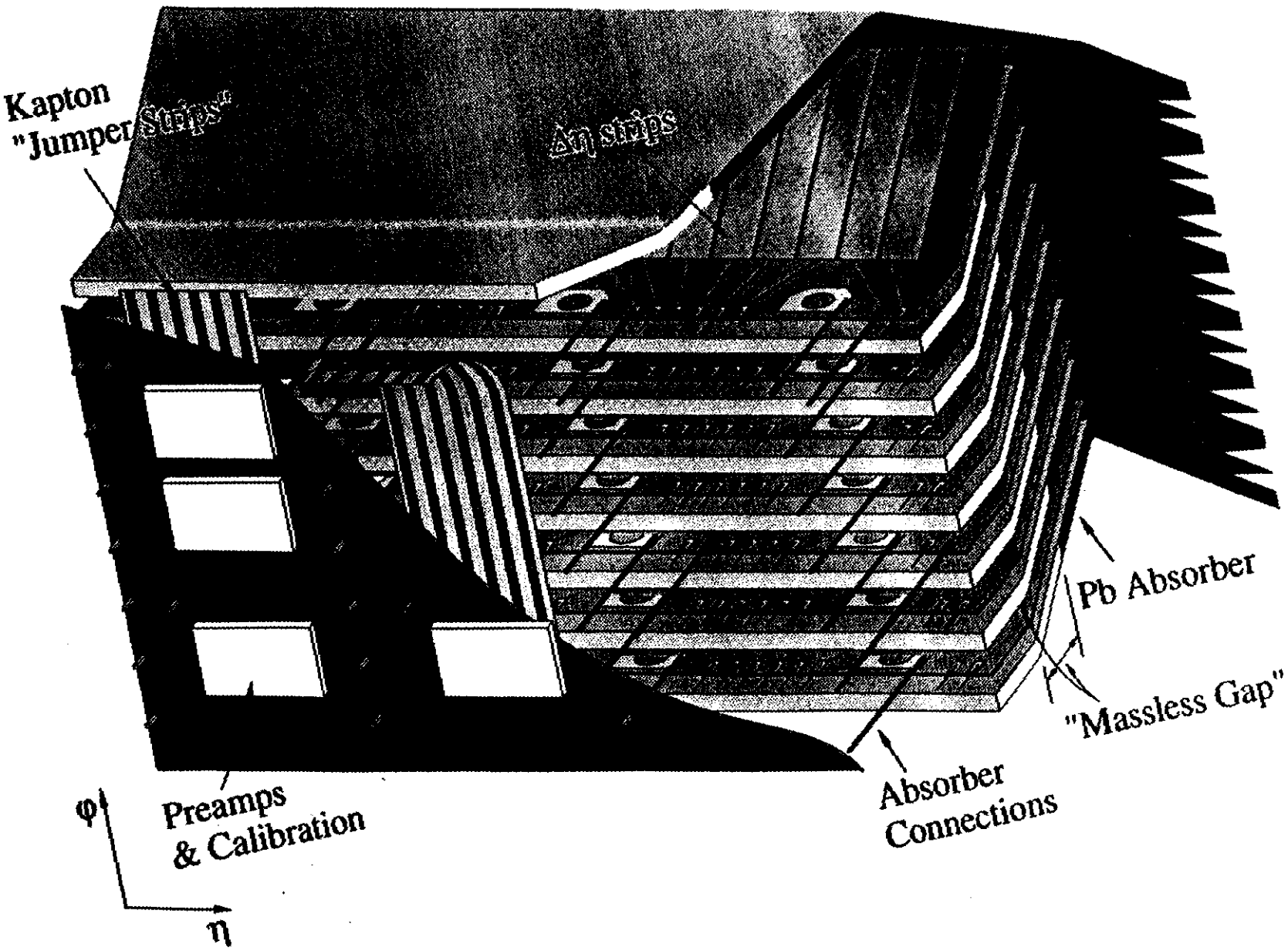

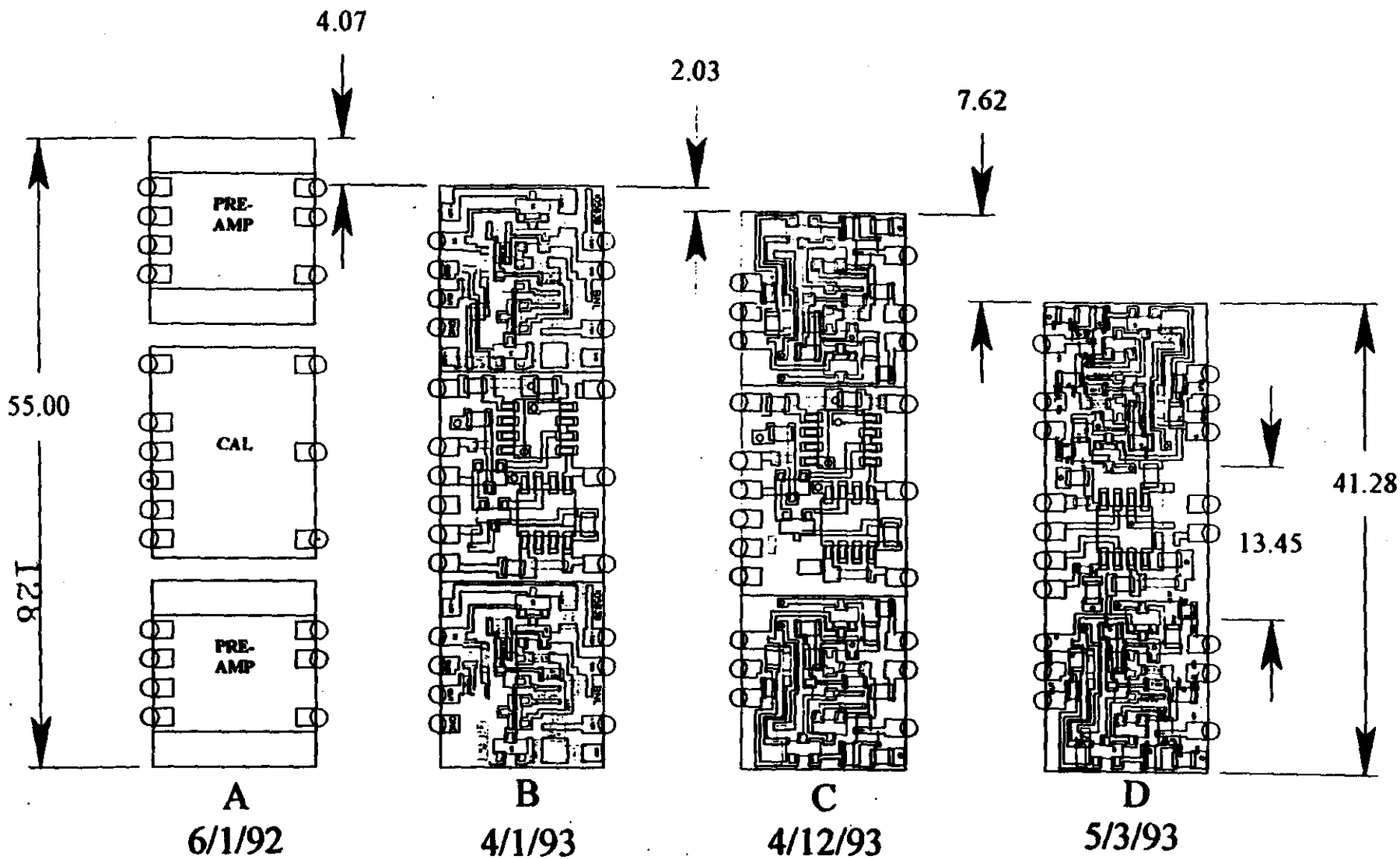

Legend:
A: Layout separate hybrids
B: Combine pre-amps and calibration
C: Reduce size of pre-amps
D: Repackage calibration FET's

DSM
5/3/93

Inner Barrel Pre-amplifier and Summing Board (36 Channels)

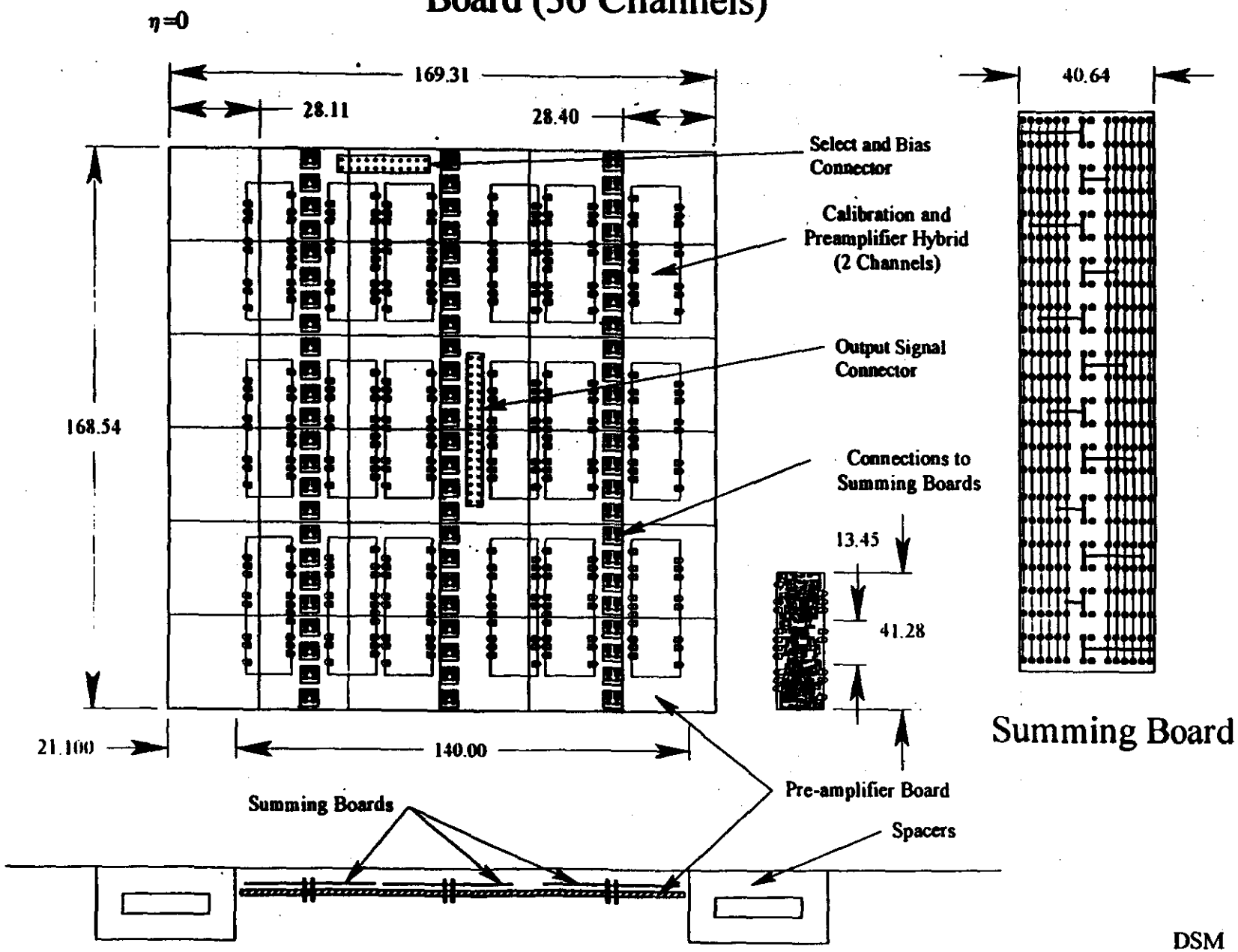

DSM
5/19/93

Outer Preamplifier Board

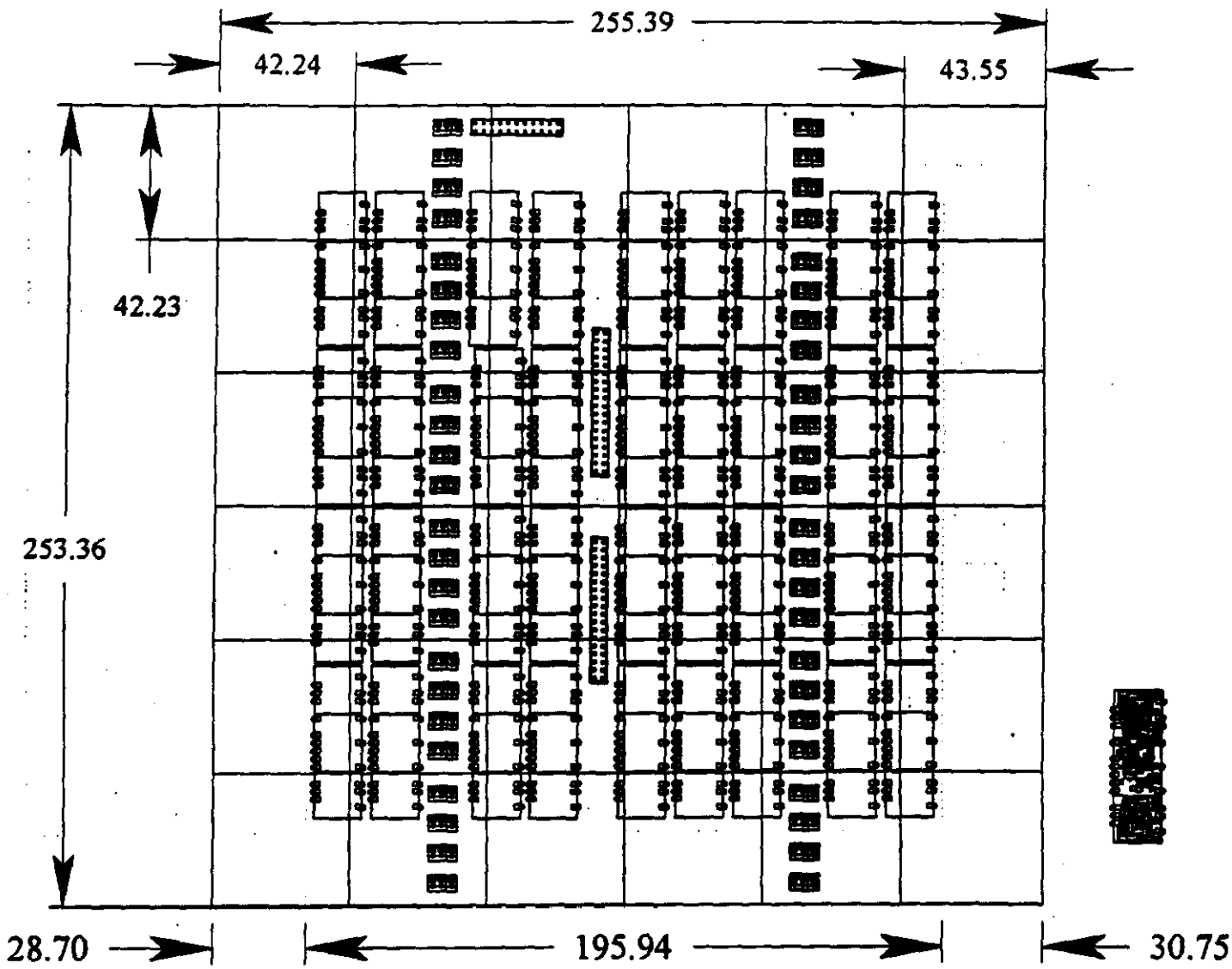

DSM
4/12/93

Electrical Connections to Pre-amplifier Board

Function	Inner Barrel	Outer Barrel	Remarks
Signal Lines	36	72	36 channel strip line connection require 2 connectors on outer barrel
Clock Lines	2	4	quality transmission line good shielding required
Current Source	2	4	low leakage path, good shielding
Select Lines	18	18	TTL logic levels
Bias Lines	1	1	minimize pickup
Power	1	1	V+, V- and ground connection
High Voltage	1	1	High Voltage applied to signal electrode only at end ring pre-amp boards

TESTBEAM CAL READOUT ELECTRONICS

THREE LEVELS OF STAGING,

1) TRACK AND HOLD FOLLOWED BY COMMERCIAL ADC

   1000 CHANNELS ?

   SINGLE SAMPLE / CHAN

   FASTBUS ?

2) NEWS MULTIPLE SAMPLE ELECTRONICS

   192 CHAN

   ~ 24 SAMPLES/CHAN

   VME

3) GEM PROTOTYPE ELECTRONICS

   AS IT BECOMES AVAILABLE

   MULTIPLE SAMPLES $\lesssim 10$

   FIBER, VME, GEM DAQ PROTOTYPE

EVENT SIZE: $\#\text{SAMP} = 192 \cdot 24 = 4.6k$

$\#\text{BYTES} = \frac{4.6k}{2} \cdot 4 \lesssim 10k$