GEM TN-93-412

Muon Chamber Design Meeting - SSCL

May 18, 1993

Abstract:

Agenda, attendees, and presentations of the Muon Chamber design meeting held at the SSC Laboratory on May 18, 1993.

Chamber meeting

May 18, 1993 SSCL

Agenda

1. General remarks - G. Mitselmakher
   - Post TDR R&D task 1 ÷ task 2
   - milestones
   - schedule - design workshop
     - large prototypes
     - engineering R&D
2. Engineering R&D:
   a) Molded frames - V. Polychronakos
   b) new approaches towards frame design - C. Johnson
   c) C. Milner
3. Chamber performance R&D + prototypes
   PNPI - O. Prokofiev
   SSCL - ~~Yu. Ramushkin~~ V. Glebov
4. Alternative schemes (K. Lau, C. Bromberg ...)

Muon chamber design meeting

SSCL, May 18, 1993

1.	Gena Mitselmakher	SSCL	(214) - 708-6001	SSCVX1::MITSELMAKHER
2.	Kwong Lau	Houston	(713) 743-3600	Lau@UH-edu
3.	Antonio Morelos	SSCL	(214) 708 6209	SSCVX1::MORELOS
4.	Cas Milner	SSCL	214 708 6216	SSCVX1 :: Milner
5.	Vinnie Polychronakos	BNL	516-282-3992	POLYCHRON@BNLDAC
6.	Oleg Prokofiev	SSCL		SSCVX1 :: PROKOFOE
7.	Yuri Bonushkin	SSCL	214 708 3078	SSCVX1 :: BONOSHKIN
8.	Frank Stocker	SSCL	214 708 6025	SSCVX1 :: STOCKER
9.	Vladimir Gavrilov	SSCL/ITEP	(214) 708-6385	SSCVX1::GAVRILOV
10.	Carl Bromberg	MSU	517 353-1809	MSUHEP::BROMBERG
11.	Yanan GUO	SSCL	214-708-4457	SSCVX1 :: GUO
12.	Yinzhi Huang	SSCL	214-708- ?	SSCVX1::HUANGYZ
13.	Vladimir Glebov	SSCL	214-708-6321	SSCVX1 :: GLEBOV
14.	Coleman Johnson	SSCL	214-708-1188	SSCVX1 ::JohnCole

Engineering R&D

Major problems: –

- ~~[illegible]~~ reduce material in frames

Approaches:

1. Molded frames –
   - V. Polychroniakos
2. Change of existing design:

Chamber performance R&D

1). Resolution for different geometry:

SSCL (laser beam)

ITEP

PNPI

⋮

Dubna (long chamber)

BNL (trapezoidal chamber)

2). Lorentz angle effects.

a) barrel ITEP

SSCL (laser)

b) endcap PNPI

SSCL (laser)

Large prototypes:

Barrel:

a) Dubna 4 gaps 1x3 m? July 1993

b). ? ... 6 gaps end 1993

Endcap:

a) 6 gaps large chamber PNPI?
end 1993 MIT?

Frames:

functions

1. Rigidity of chamber (saggita)
2. Gas seal
3. Cathode-cathode spacer
4. Wire-support and Anode-Cathode spacer
5.

⋮

Separate functions in design!

Draft-3

GEM Post TDR Muon R&D Program for FY93

May 7, 1993

Abstract

The objectives of the Post-TDR FY93 R&D and Engineering Program for the GEM Muon System are to carry the chamber design, alignment, and support structure into fully integrated, and engineered system. In contrast, the Pre-TDR program concentrated on the conceptual design of the muon system and on extexsive investigations of various chamber technologies. This effort lead to our choosing Cathode Strip Chambers for both the triggering and tracking functions of the muon system. In the Post-TDR program certain aspects of the Cathode Strip Chamber design will be developed and tested by means of small prototype chambers where the parameters of interest will be varied. Such issues as the resolution of the chamber for different anode-cathode gaps will be investigated. In addition, the full engineering details and "industrialization" of the chamber design will be conducted with the intent of setting up a pilot factory and producing first production chambers in FY94. The design of the chamber support and alignment systems will be developed in sufficient detail to allow for the fabrication of a sector prototype in late FY94. The construction of an alignment test-stand will be an important objective for this phase of the R&D program. The test stand will enable the concept of the "false-sagitta" measaurement and interpolation to be validated.

Table of Contents

1.0 Introduction 2
2.0 Task Definitions 4
2.1 Task 1 - Develop Cathode Strip Chamber Technology 4
2.2 Task 2 - Chamber Performance Evaluation 6
2.3 Task 3 - Muon Trigger 8
2.4 Task 4 - Alignment Technology 10
2.5 Task 5 - Electronics Evaluation 11
2.6 Task 6 - Simulations 12
2.7 Task 7 - Industrialization of Chamber Design and Layout of Chamber Factory 14
2.8 Task 8 - Mechanical Engineering 16
2.8.1 Task 8.1 - Engineering Coordination 16
2.8.2 Task 8.2 - Design Support Structures, Shielding and Infrastructure 16
2.8.3 Task 8.3 - Conceptual Design of Chamber Services 17
3.0 - Budget Summary 19
4.0 - Schedules and Milestones 20
5.0 Budget Plans 21

Compiled by:

Gena Mitselmakher - SSCL [SSCVX1::MITSELMAKHER]
Frank Taylor - MIT [MITNLS::FET]

In order to manage the activities of the groups contributing to the chamber design a Chamber Commitee will be created with the primary function to overlook all activities and coordinate chamber design. The chairman of the Commitee is the Task Coordinator.

The proposed work is broken down into the following subtasks:

Deliverables:

(2.1.0) Purchase common parts (raw materials) for chamber construction.

(2.1.1) Fix the baseline chamber design for barrel and endcap chambers. Document all mechanical tolerances and dimensions. Compile a set of drawings. Integrate with electronics, alignment, gas and services.

(2.1.2) Investigate and validate with reduced size prototype measurements of different aspects of chamber design:
a) resolution performance vs. gap and strip segmentation;
b) investigation of different possibilities of calibration: with wire induced signal, electronically and using data from real particles.
c) consider the possibility of molded chamber frame production.

(2.1.3) Construction of full size prototypes:
a) "-1 generation" prototype of a barrel middle layer chamber: 3m by 1.1m - six 4mm gaps;
b) "0 generation" prototype of a barrel outer layer chamber: 3.5m by 1.4m - six 5mm gaps;
c) "0 generation" prototype of an end cap middle layer trapezoidal chamber: 2.2m by 0.9/0.61m - six 4mm gaps.

Task Coordinator: Gena Mitselmakher - SSCL

Chamber Commitee: Carl Bromberg. Igor Golutvin, Ya-nan Guo, Coleman Johnson, Yuri Kiryushin, Kwong Lau, Louis Osborne, Vinnie Polychronakos, Alexei Vorobyov, Craig Wuest, Scott Whitaker.

Task Contributors:

BNL
M. Atiya, M. J. Murtagh, V. Polychronakos, V. Radeka
BU
J. Shank, S. Whitaker, F.S.U. visitor, eng1, eng2, tech1, tech2
IHEP-Beijing
Y. Chen, Y. Guo, Y. Xie, physicists and engineers
ITEP
M. Danilov, V. Gavrilov, L. Laptin, P. Murat, V. Nagovitsin, A. Ostapchuk, V. Popov, V. Shibaev, V. Stolin, V. Tchistilin, I. Tikhomirov.
JINR-Dubna
Yu. Ershov, I. Golutvin, N. Gorbunov, Yu. Kiryushin, A. Makhankov, S. Movchan, V. Rashevsky, L. Simov, S. Sergeev, D. Smolin, V. Perelygin, V. Zhiltsov
PNPI - St. Petersburg
V. Andreev, N. Bondar, G. Gavrilov, V. Grachev, O. Kiselev, A. Krivshich, V. Maleev, V. Mylnikov, S. Patrichev, O. Prokofiev, A. Vorobyov
SSCL

We have identified several specific tasks organized along the general lines indicated above.

(1) Develop Cathode Strip Chamber Technology :

- Develop chamber design which achieves the baseline performance of spatial and time resolutions and has a good stability in terms of alignment and operating point.
- Optimize the chamber design in regards to system performance and costs.
- Construct several small-scale chamber prototypes to evaluate specific aspects of the design.
- Construct large-scale prototypes of barrel and end cap chambers.
- Integrate the chamber support and alignment systems with the chamber technology.

(2) Chamber Performance Evaluation:

- Test prototype chambers at the Texas Test Rig and available accelerator beams (FNAL, BNL, RD5-CERN).
- Study the influence of the magnetic field on the chamber performance and the Lorentz-angle compensation.
- Study the single layer resolution, double track resolution, operation stability, and time resolution.
- Develop an optimal gas mixture which has the best time resolution and efficiency.
- Study the chamber sensitivity to neutrons.
- Software development for calibration, tracking, triggering, on-line monitoring, and off-line data processing.

(3) Muon Trigger :

- Design and evaluate performance of Level 1 muon trigger by means of Monte Carlo simulations, cosmic ray, and beam tests.
- Develop and evaluate electronics needed for trigger in collaboration with the GEM Electronics Group.

(4) Alignment :

- Assess technology options and develop them for GEM application (LED-LENS, or CCD, etc).
- Set up test bench to evaluate technologies in a standard way.
- Integrate alignment technology with chamber design and support structure.
- Set up Alignment Test Rig (ATR) to evaluate alignment technology with chamber mock-ups.
- Design complete system - specifying the type, number, and deployment of monitors.
- Simulate operation of complete system and validate the design and its error budget.
- Evaluate X-ray alignment scheme. Develop mass production techniques for aligning layers within a chamber module.

(5) Electronics:

- Fabrication of front-end electronics for prototype chambers to be tested in FY1993.
- Work in collaboration with GEM Electronics Group to specify electronics for chamber readout and trigger.
- Test the design of front end/readout electronics on prototype chambers.

(6) Simulations:

- Study backgrounds (muon-associated, punchthrough and neutron).
- Evaluate system performance - resolutions vs. chamber placement, alignment specifications, flux

Consider a middle supermodule

		Densities of materials	
Module Length	350 cm		
Module Width	119 cm		
Panel Skin Thickness(G10)	0.05 cm	Cu	8.96 gr/cc
Panel Skin Thickness(Cu)	0.0017 cm	Epoxy	1.3
Frame Thickness	0.4 cm	Nomex	0.039
Frame Width	6.5 cm	G10	1.7
Panel border Width (epoxy)	2.0 cm		
Panel Thickness	2.0 cm	Polymer	0.4

	Curreny design	**Casting**
Weight of Frame	49.8 Kg	
Weight of Epoxy Border	34.1 Kg	
Weight of Skins	49.6 Kg	49.6 Kg
Weight of Cu	8.9 Kg	8.9 Kg
Weight of Nomex	22.7 Kg	22.7 Kg
Weight of Polymer Frame	24.7 Kg	
Weight of wire attachemnet boards	2.9 Kg	
Total	165.1 Kg	81.2 Kg

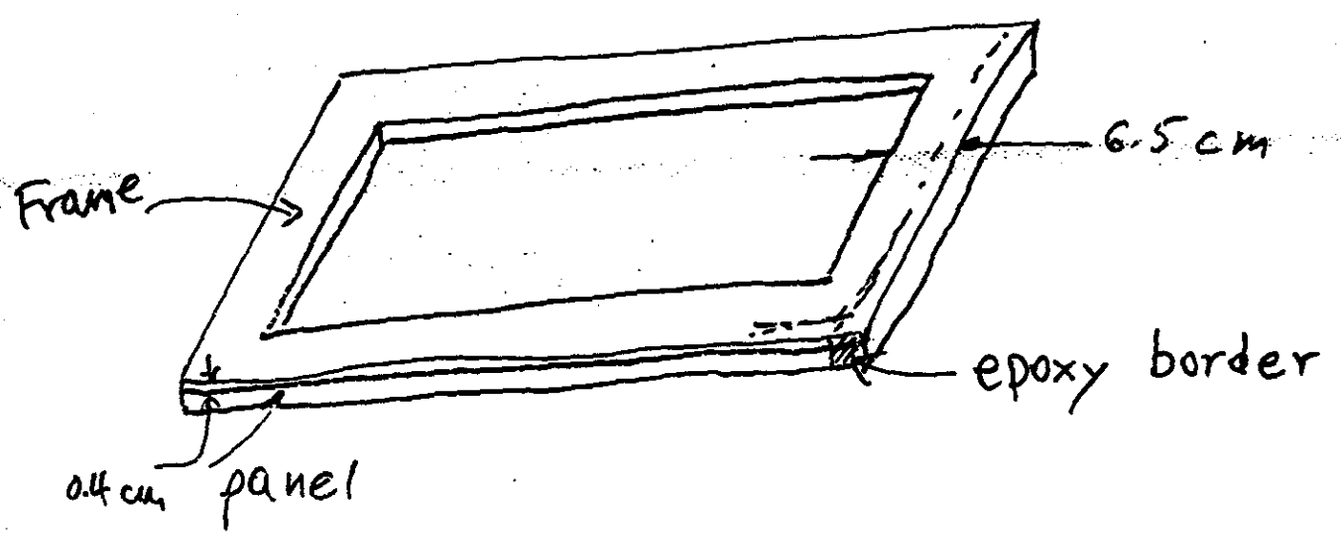

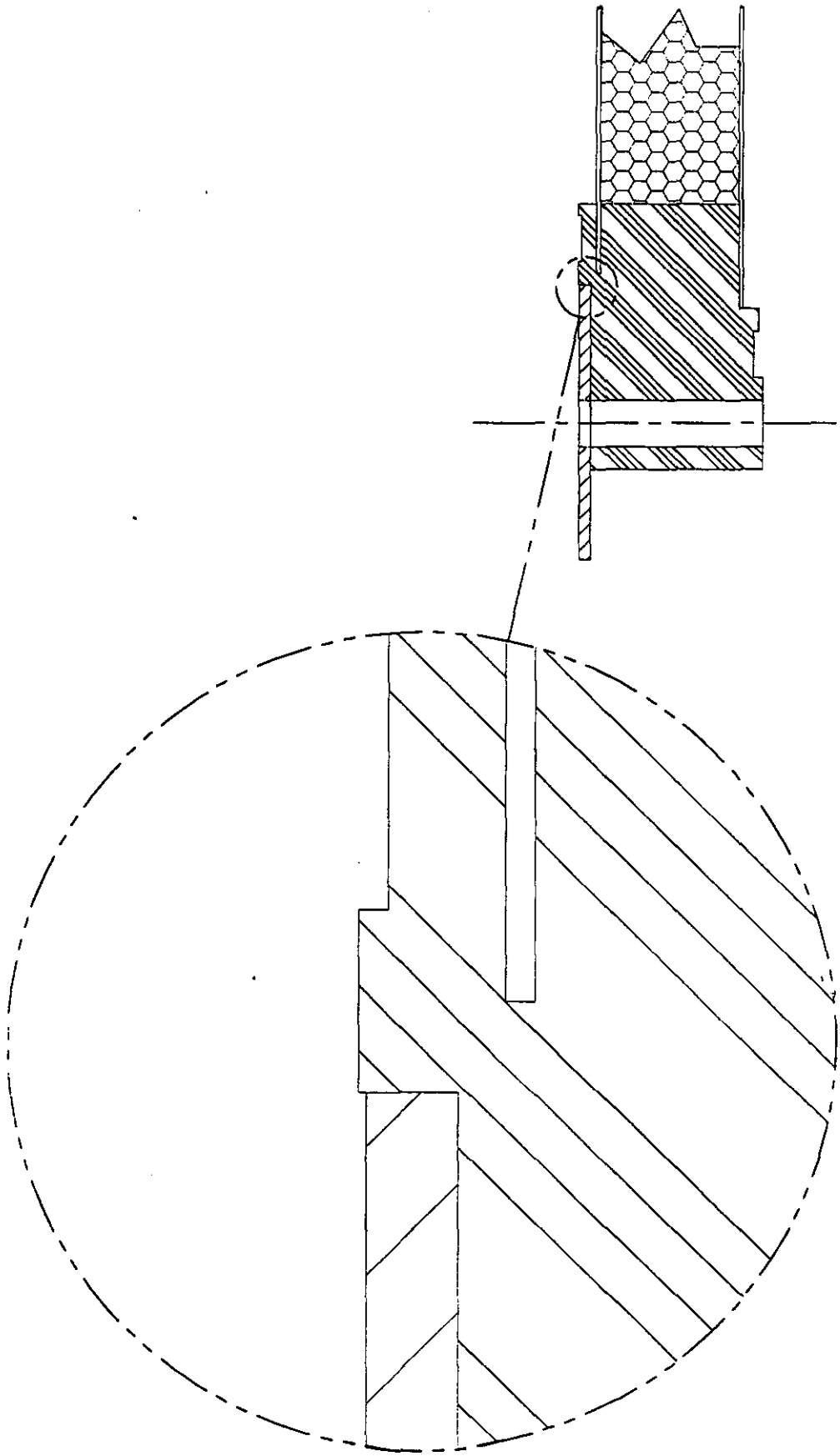

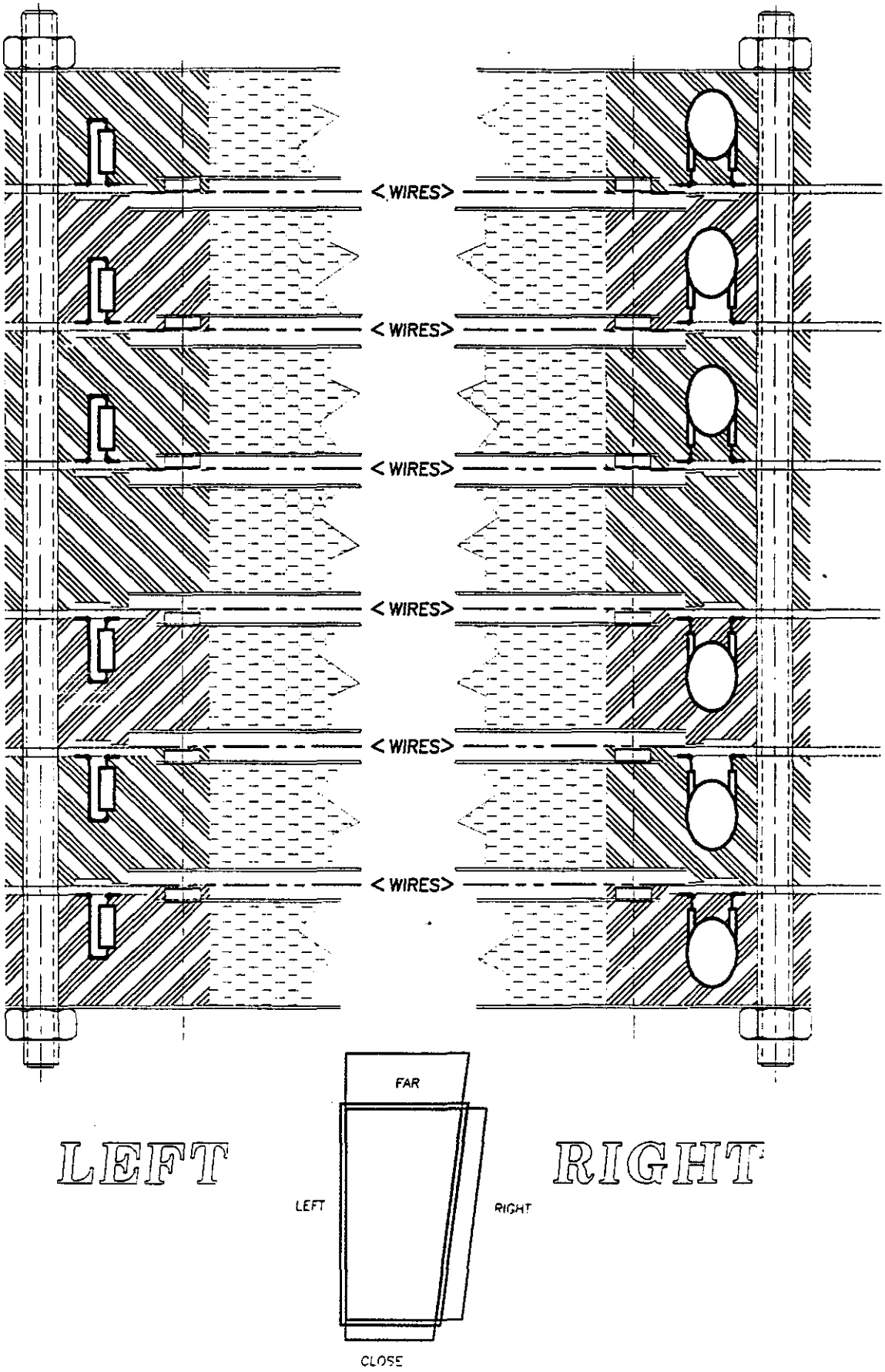
<WIRES>
<WIRES>
<WIRES>
<WIRES>
<WIRES>
<WIRES>
LEFT
RIGHT
FAR
LEFT
RIGHT
CLOSE

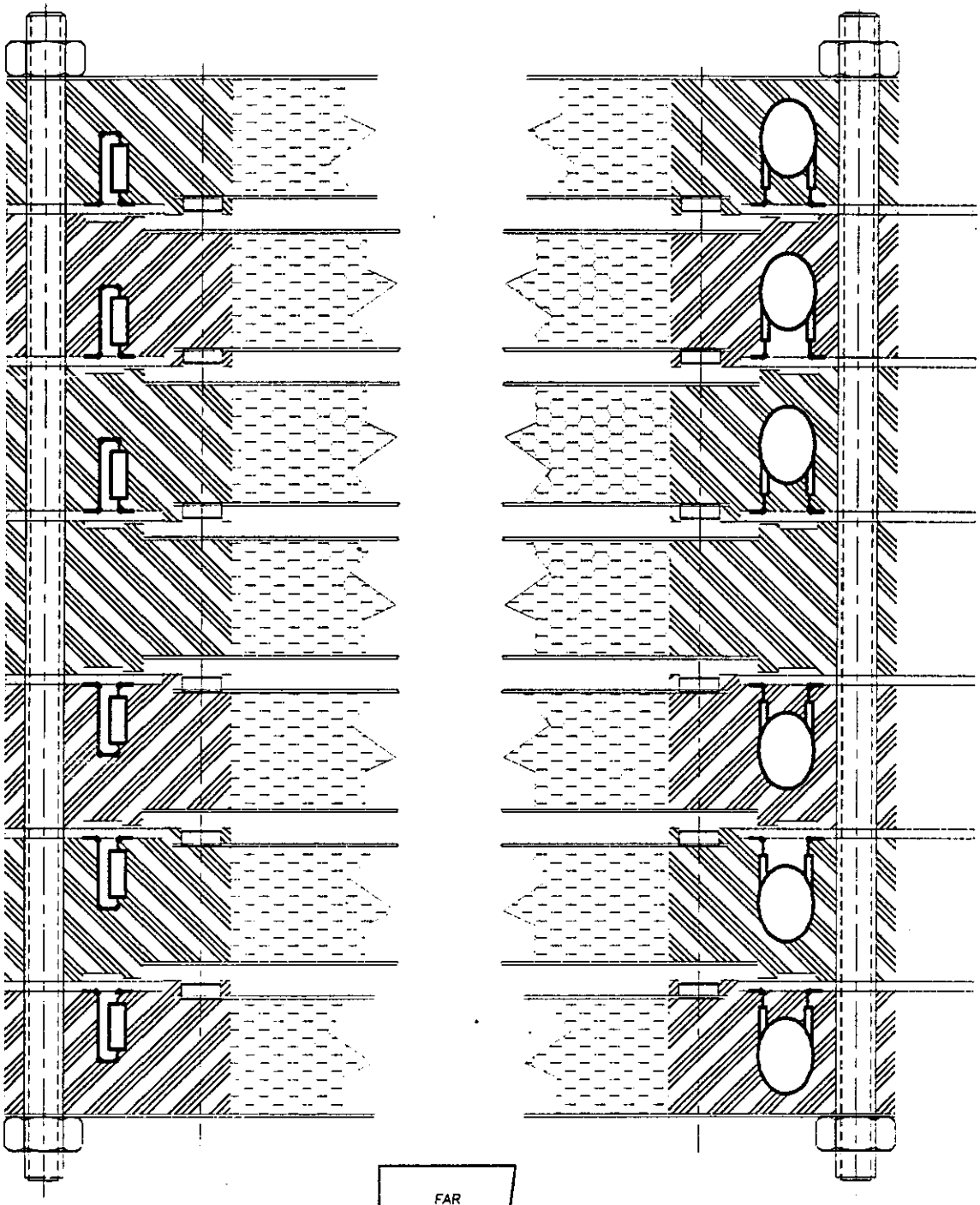

LEFT

RIGHT

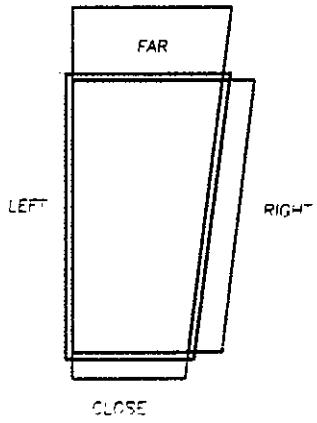

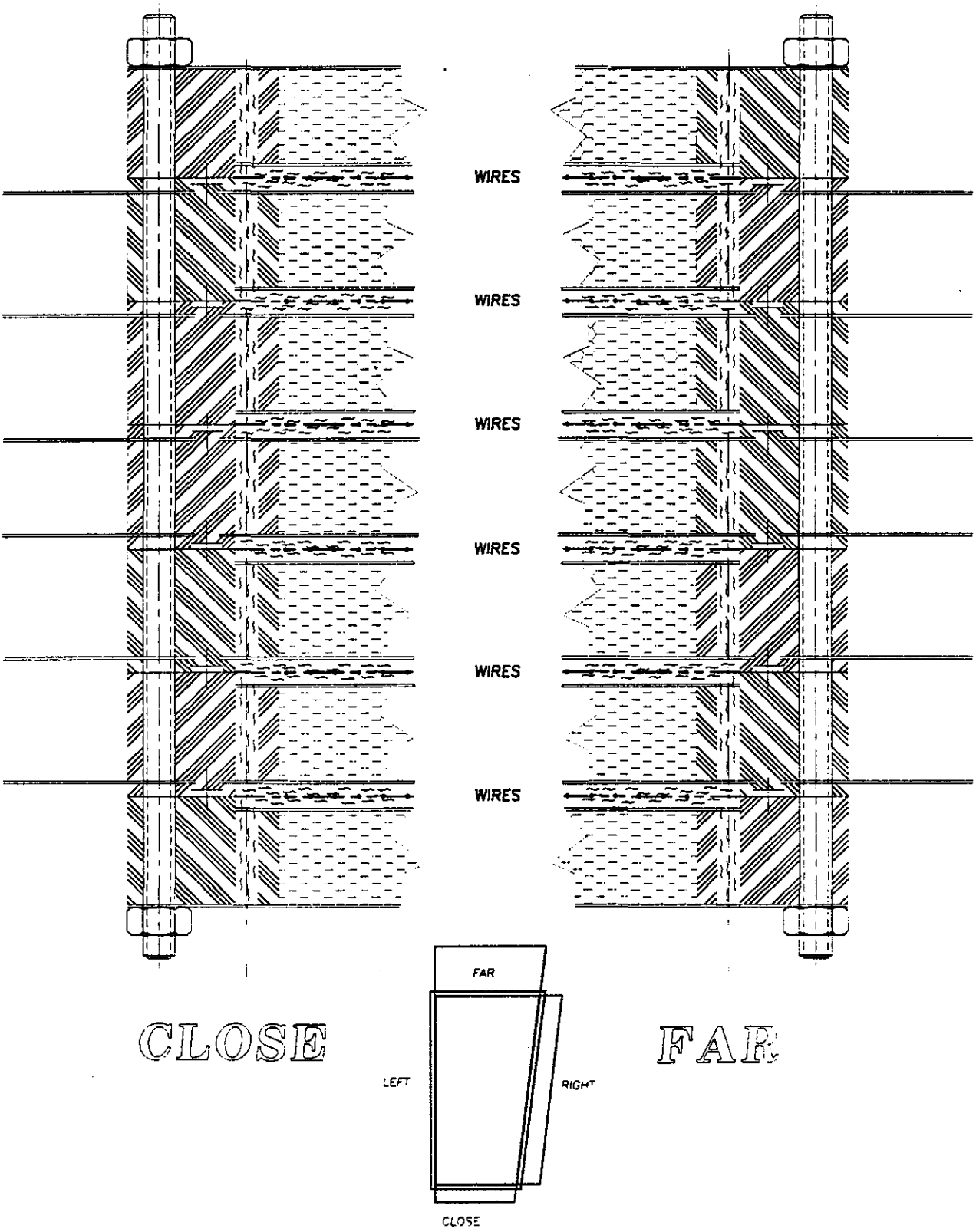
WIRES
WIRES
WIRES
WIRES
WIRES
WIRES
CLOSE
FAR
FAR
LEFT
RIGHT
CLOSE

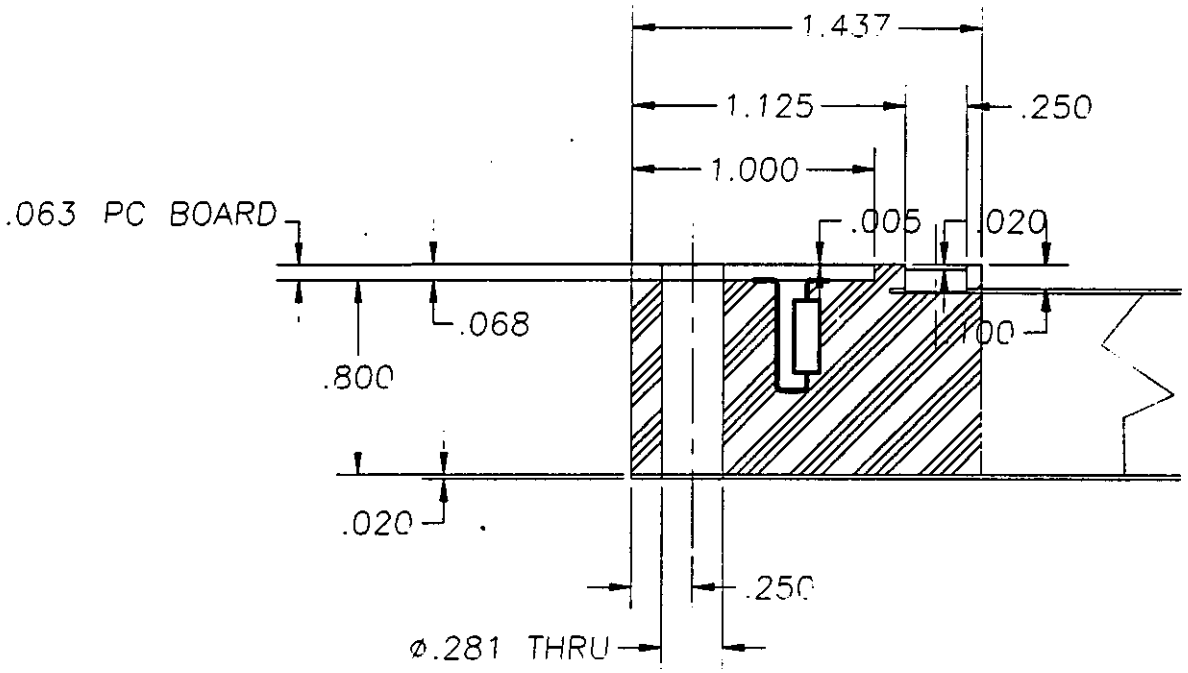
1.437
1.125
.250
1.000
.063 PC BOARD
.005
.020
.068
.100
.800
.020
.250
ø.281 THRU

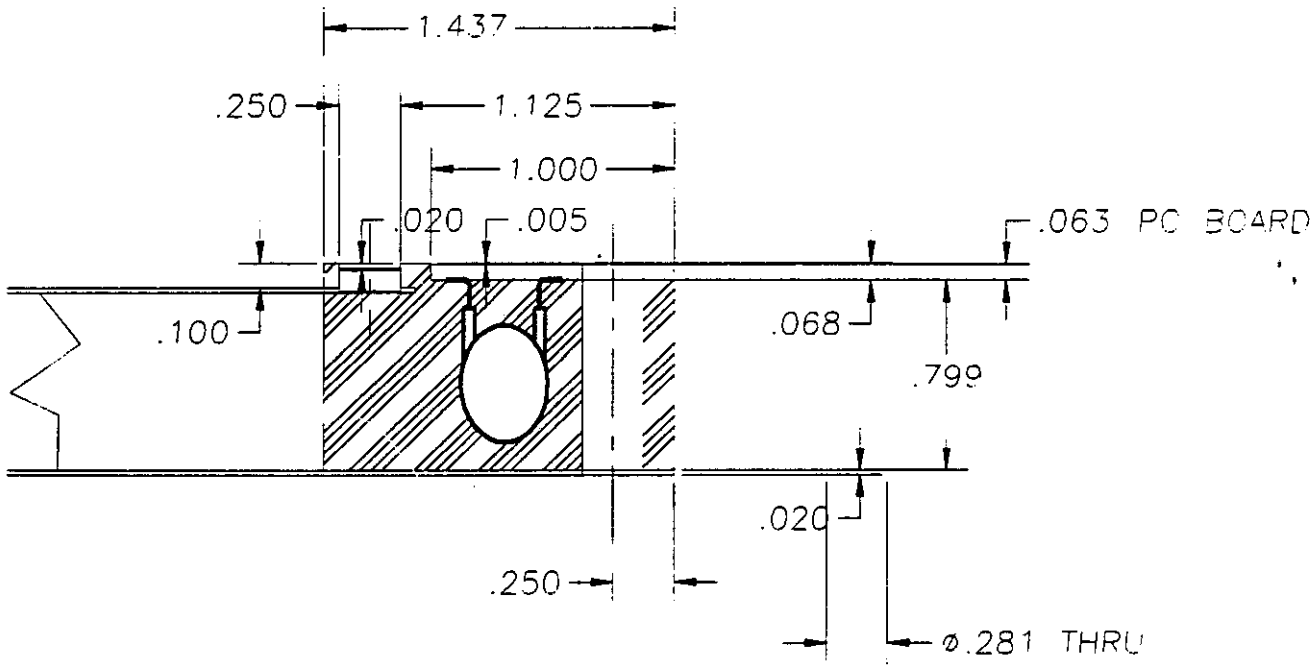
1.437
.250
1.125
1.000
.020
.005
.063 PC BOARD
.100
.068
.799
.020
.250
ø.281 THRU

POLYMER CONCRETE (PC)

Works just like concrete with PORTLAND CEMENT

MANY POLYMER RESINS
MANY AGGREGATES depends on application

<u>Usage of interest</u>

PC for machine tool bases used instead of cast iron

- High stiffness to weight ratio.
- Dimensional stability
- High vibration damping coef.
- Low thermal conductivity
- Low cost

In our case:
Use Poly-methyl-methacrylate (PMMA) with hollow glass spheres.

Desired Properties

1. Low Density ($< 0.5 gr/cm^3$)
2. Dimensional Stability
   - Low casting shrinkage ($< 0.05\%$)
   - Low creep
   - TAC 1–3 $10^{-5} in/in/C^\circ$
3. No outgassing
4. Resistant to water vapor absorption
5. Good adhesion to G10, Al, Cu
6. Low viscosity (possible to cast features ≈2.0mm)
7. Modulus of elasticity (¿5,000,000 psi)
8. Dielectric constant (<4)
9. Dielectric strngth
10. Vibration damping factor (¿0.003)

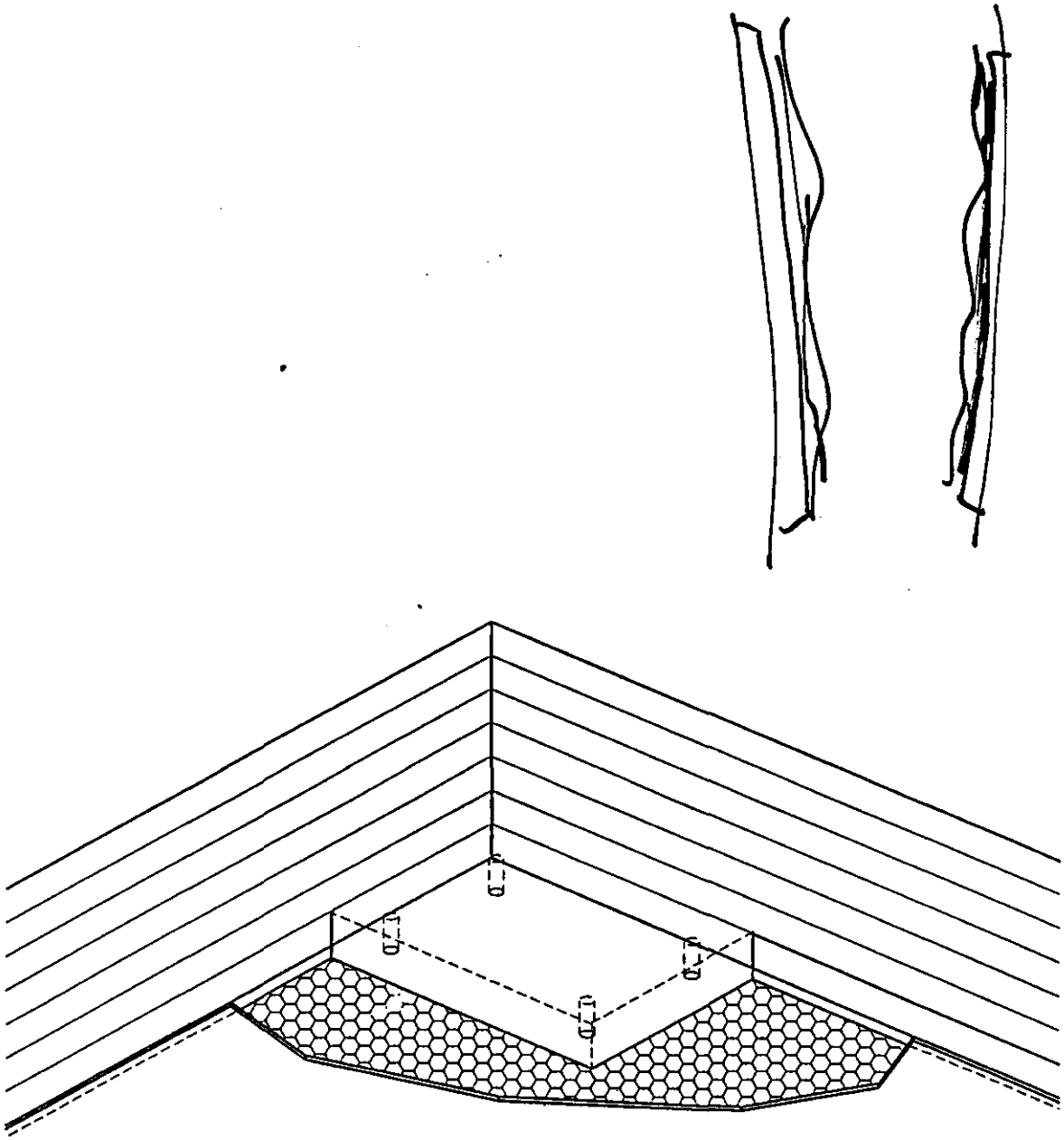

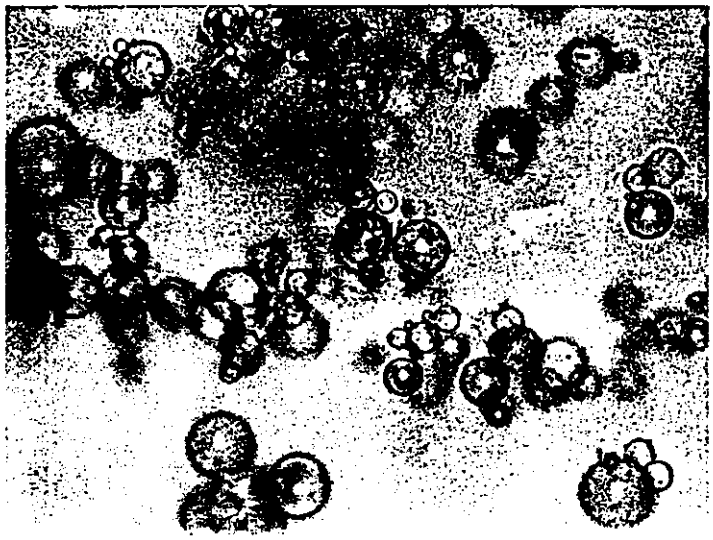

100 μm

CHAMBER EDGE SPACER FRAME

FUNCTIONS:

- Cathode-cathode spacing
- Cathode-anode spacing
- Wire support
- Gas seal
- Location for resistors, capacitors

ONLY 2 REQUIRE ACCURATE DIMENSIONS:

- Cathode-cathode spacing
- Cathode-anode spacing

DESIRED PROPERTIES:

- Minimum material
- Minimize fabrication costs
- Minimize assembly costs

cv|xxxxx-1
5/18/93

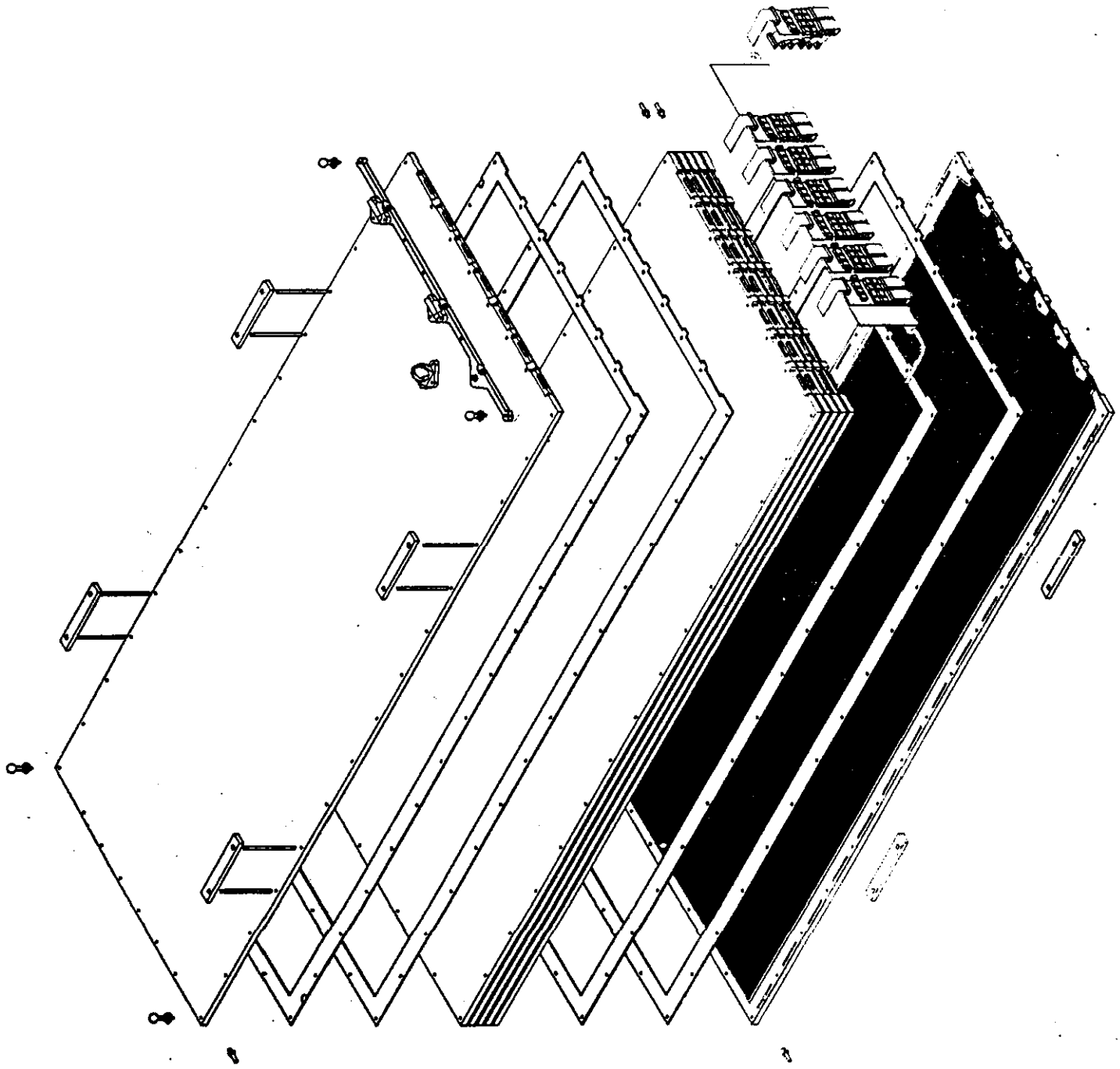

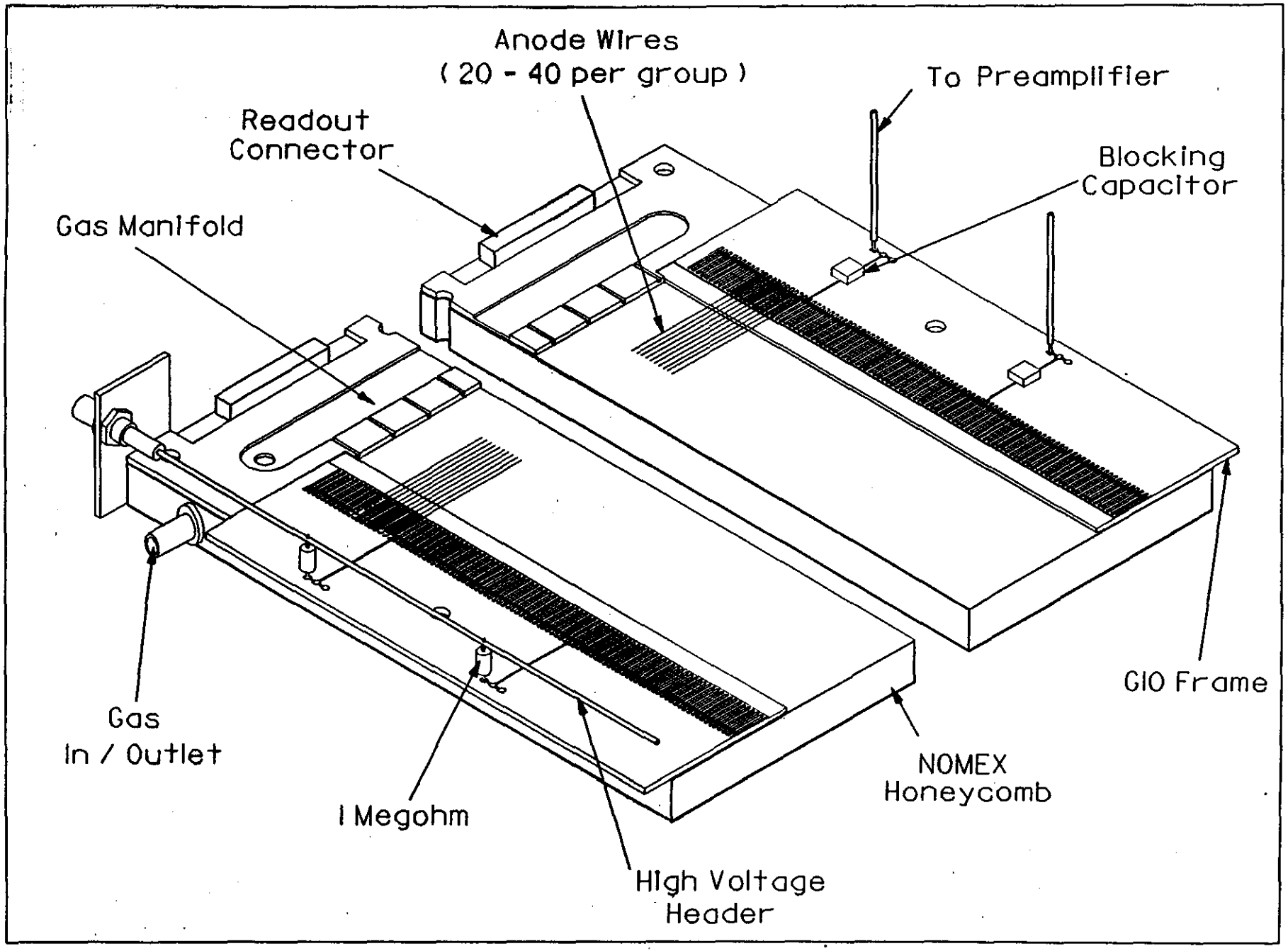
Anode Wires
(20 - 40 per group)
To Preamplifier
Readout
Connector
Blocking
Capacitor
Gas Manifold
GIO Frame
Gas
In / Outlet
NOMEX
Honeycomb
I Megohm
High Voltage
Header

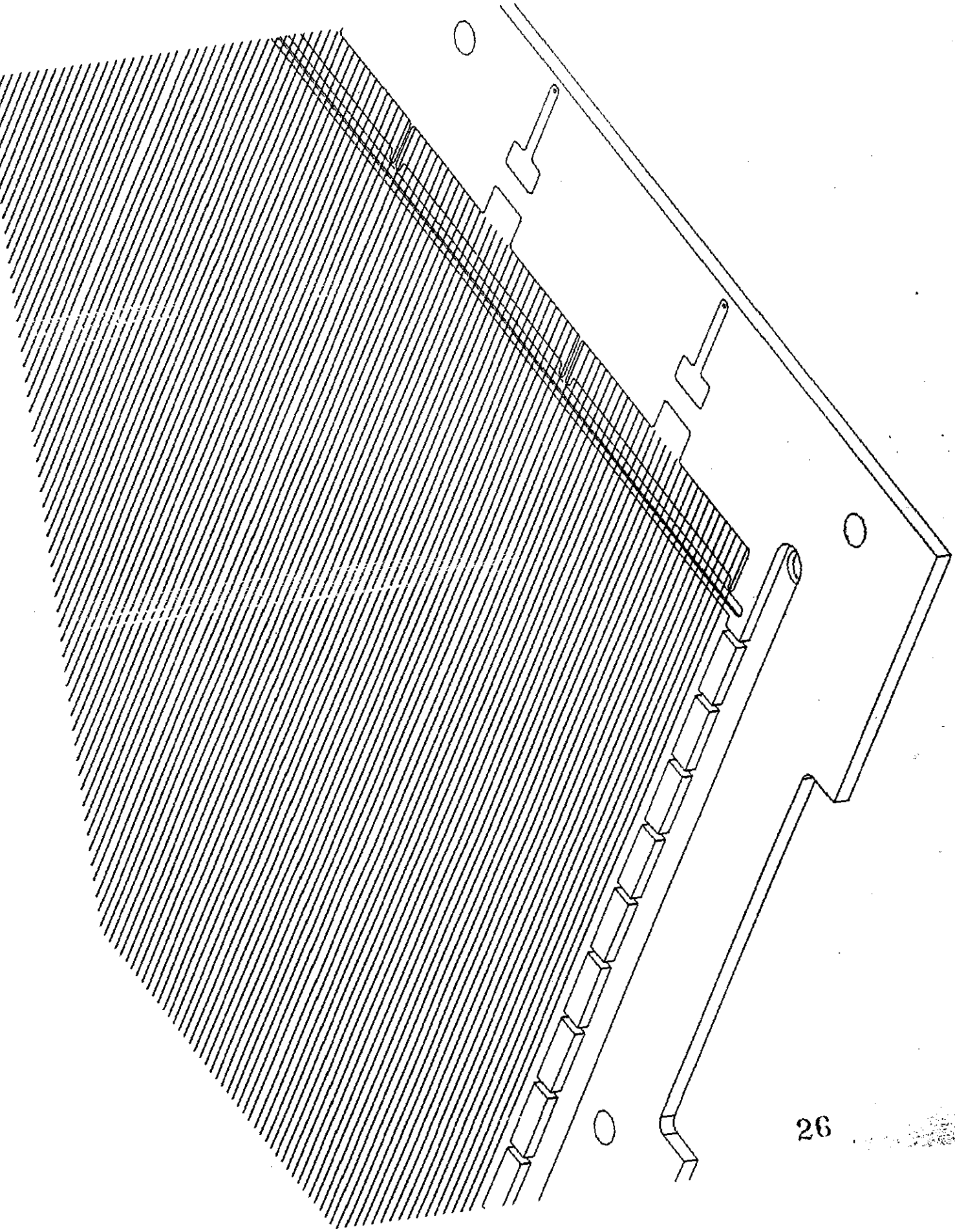

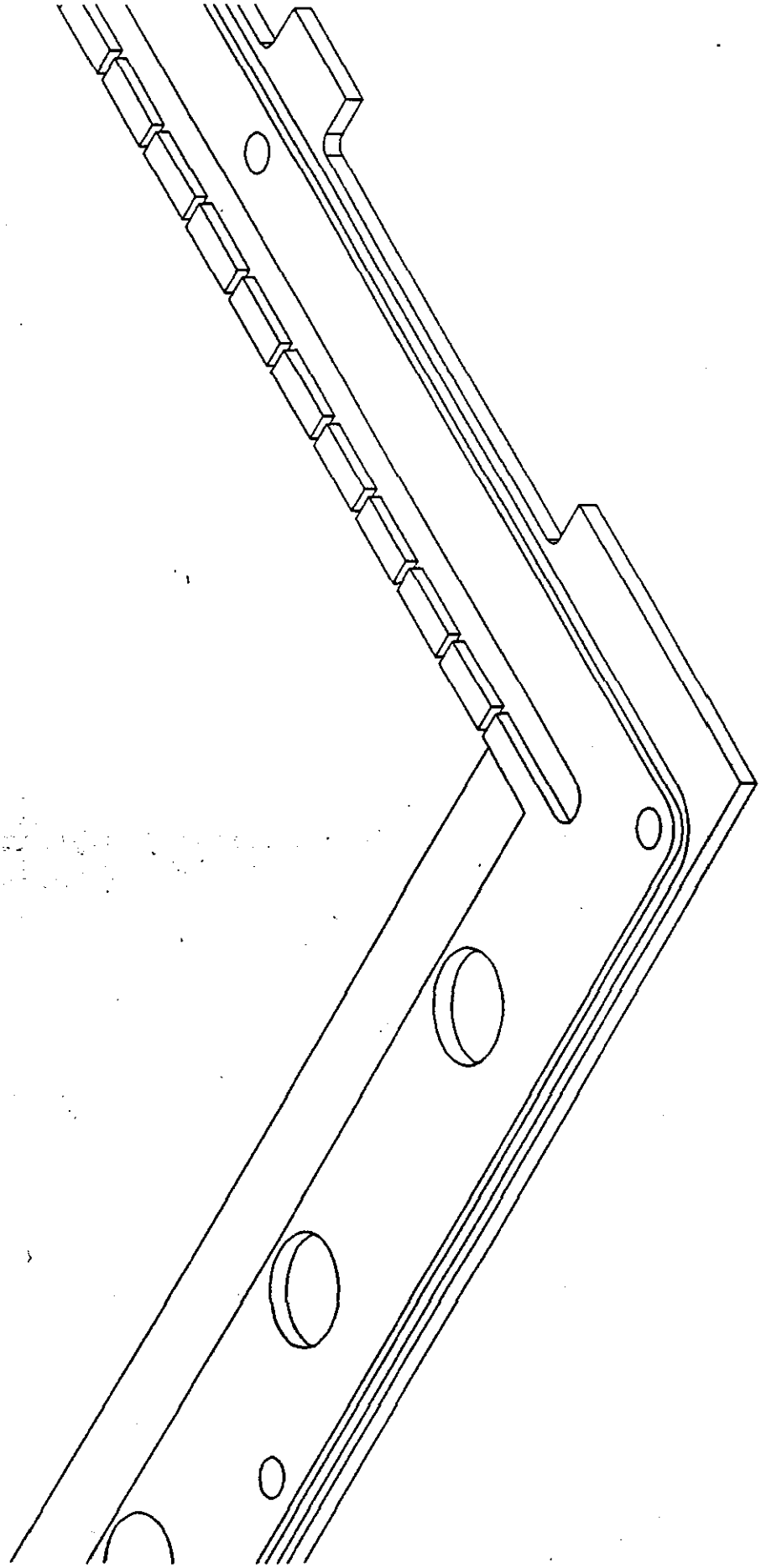

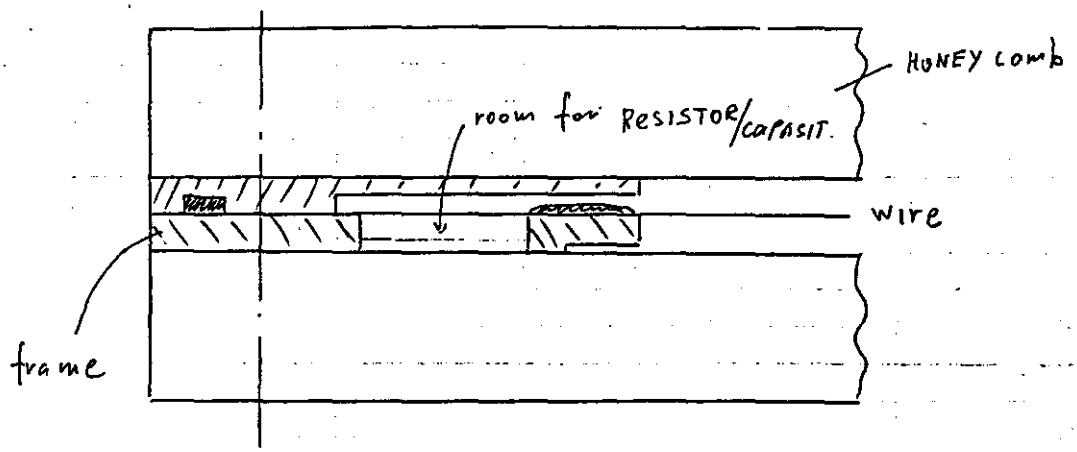
HONEY comb
room for RESISTOR/CAPASIT.
wire
frame

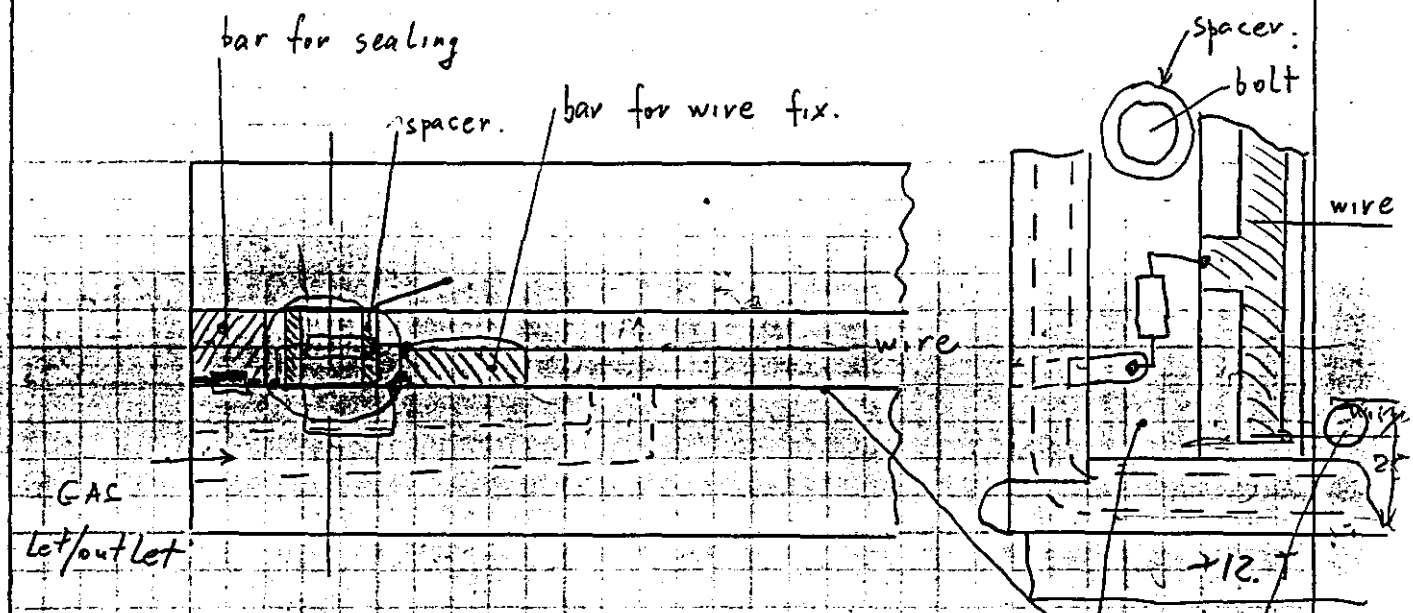
bar for sealing
spacer.
bar for wire fix.
wire
GAS
let/outlet
spacer.
bolt
wire
2
12.
hole Gas
Let/outlet
bottom
GID-plate

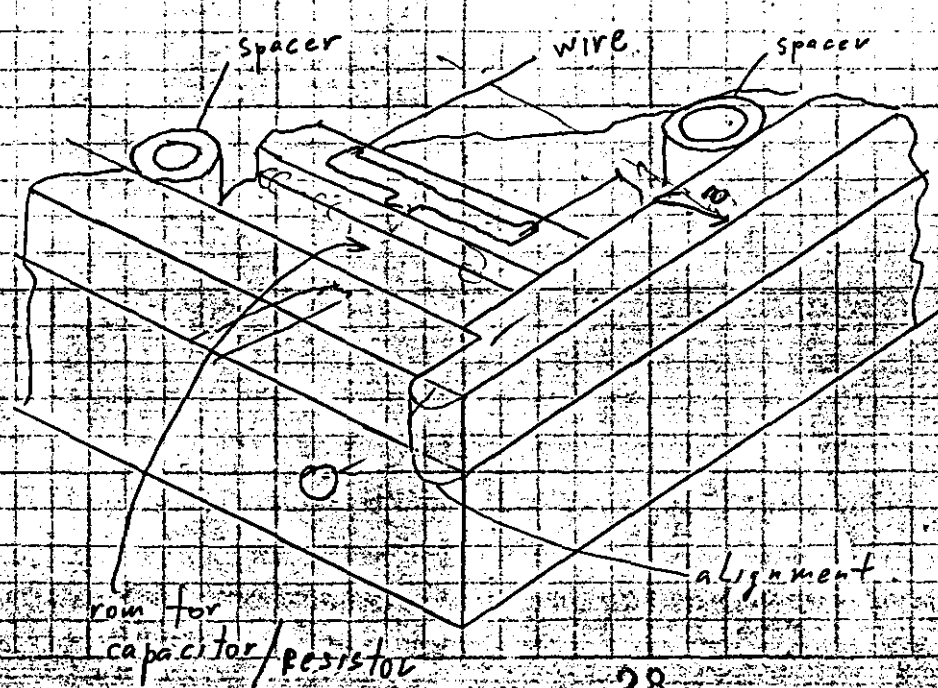
spacer
wire.
spacer
10
alignment
room for
capacitor/resistor

5/18/93
O. Prokofiev

PNPI GEM R@D program for the second half FY 93

Task 1 Develop CSC Technology

We are planning to organize a factory for mas production of the CSC
(detailed description TN-93-366)

Present PNPI facility - 500 m², 27 person will be essentially extended

Now we have additional area 1500 m²

To produce 480 modules for 3 years

1 module per 2 working days

≈ 50 person is needed (now 7 person)

Experience - production of the first prototypes of CSC for GEM in 1992

Nearest plans:

- to fix the baseline chamber design and define technology of the mass production BARREL @ END CAP

Workshop: SSCL, JINP-Dubna, PNPI (2 design-engineer from June), BNL, ...

- Production:
  1. Big BNL prototype CSC (4 layers) with radial strips (Beam, TTR-test)
  2. Preproduction (0-generation) prototype END CAP CSC 2.2 m × 0.9 m × 0.61 m

We have ordered:
2 table (big iron) 1.5 m × 3.0 m with 30-50 μm accuracy
have started equipment for flatness calibration, wire winding

Task 2. Chamber performance

- <u>Drift velocity and Lorentz angle</u> measurements.

  Extend up to 10 kV/cm

  $CO_2 - CF_4$

  $Ar - CO_2 - CF_4$

  $Xe - CO_2 - CF_4$

- <u>Tests of CSC's in Magnetic fields</u>

  End Cap configuration: $E \parallel B$

  Proton beam, Si-strip

  Angle between beam and $\vec{B}$ can be varied up to <u>30°</u>

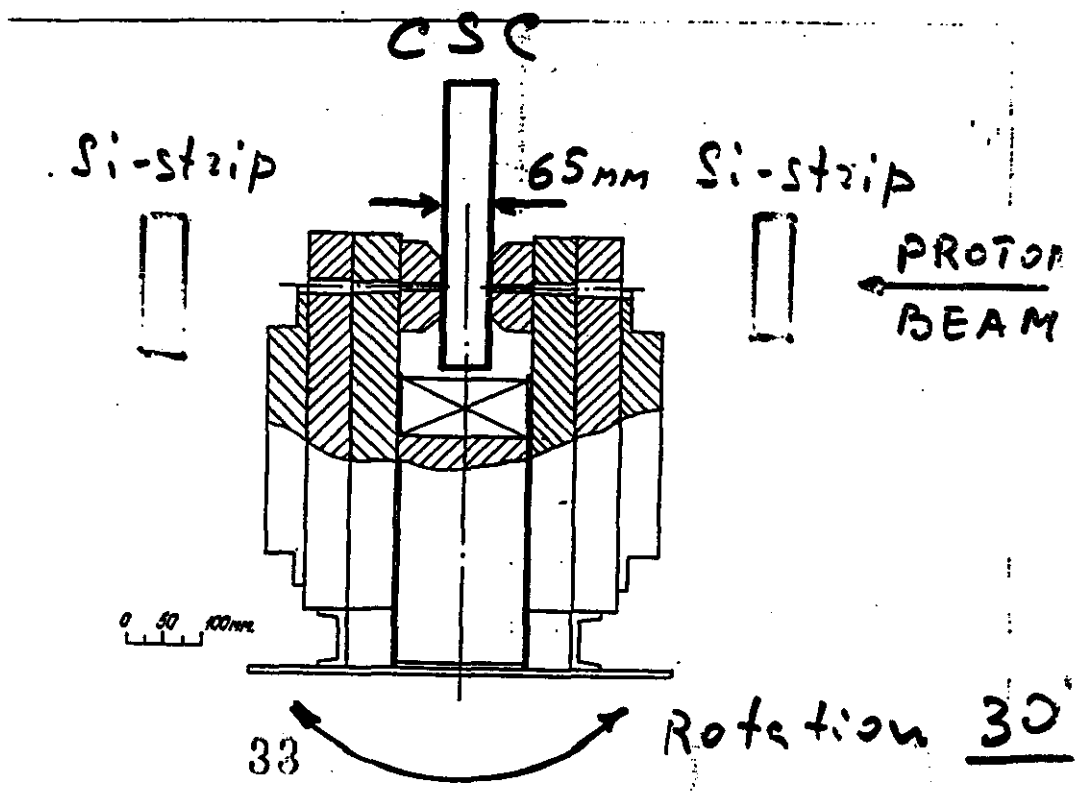

- Neutron and γ-tests Neutron beam

The first run has been performed for neutron energy 0.5ev – 100kev

Preliminary results:

The efficiency of CSC to neutrons at $E_n < 200$ev $\approx 0.2\%$

The essential contribution is due to Be

Plans: extention of E_n up to 20 Mev
studies correlation efficiency
construction of CSC with mylar window

- Tests of CSC in 1.7 GeV/c proton beam

The first test run was performed in Jan 4 to 14

Part of the data were analyzed and presented at GEM meeting on Jan 27.

Main results: Time jitter – 98% of events are detected within 16 ns
Space resolution $\sigma \approx 50$ mm

New tasks: construct one layer CSC

proton beam + Si-strip

- time resolution using discriminator level
- timing signal from the second cathode
- wide strip configuration
- optimization the algorithm of the analysis of cathode signal
- double track resolution
- studies CSC with various S and L

Post TDR Muon R&D Program

Task 2: Chamber Performance Evaluation

Experimental Facilities:

SSC: TTR
Laser test-stand

ITEP: ITEP 6 GeV pion beam
ITEP n, γ test-stand

PNPI: PNPI 1.7 GeV proton beam
PNPI neutron spectrometer

BNL: Pion beam up to 15 GeV

RD5: Proton, pion, muon beams up to 300 GeV

SSC R&D Program

1. BNL cmamber measurements at TTR
   BNL, SSCL
2. Laser test-stand upgrade
   small CSC chamber
   a) gas mixture, gap, strip width
   b) Lorentz angle compensation
   c) operation parameters
   SSCL, ITEP
3. TTR Software development
   a) calibration for "standard" electronic
   b) on-line monitoring
   c) off-line for CSC data processing
   SSCL, BNL, ITEP
4. DUBNA CSC measurements at TTR
   DUBNA, SSCL, ITEP
5. Long term stability measurements
   DUBNA, SSCL, BNL

ITEP R&D Program

1. Single layer spatial and time resolution in magnetic field 0.8 Tl
   ITEP
2. Resolution vs gap and strip width.
   ITEP
3. Measurements of neutron/gamma sensitivity of CSC
   ITEP, BNL
4. Two track resolution
   ITEP

PNPI R&D Program

1. Measurement of Drifts and Lorentz Angles
2. CSC Endcap in Magnetic Field.
3. Neutron and Gamma sensitivity.
4. CSC tests in 1.7 GeV proton beam
   a) timing
   b) second cathode
   c) CSC with no floatig strips
   d) double track resolution
5. Monte Carlo simulation of CSC Performance.

Kwong Lau
5/19/93

Open Profile CSC (OPC) Material Audit

Inputs :

$$X_0^{cal}(Cl) = \frac{716.4\ g/cm^2 \cdot A}{Z(Z+1)\ln(287/\sqrt{Z})} \cdot \frac{X_0^{expt}(Ar)}{X_0^{cal}(Ar)} = 19.25\ g/cm^2$$

$$\frac{1}{X_0(PVC)} = W_C \frac{1}{X_0(C)} + W_H \frac{1}{X_0(H)} + W_{Cl} \frac{1}{X_0(Cl)}$$

$$PVC \equiv [C_2H_3Cl]_n$$

$$\boxed{X_0^{cal}(PVC) = 25.49\ g/cm^2}$$

$$\rho^{expt}(PVC) = 1.58 \pm 0.02\ g/cm^3$$

$$\boxed{X_0(PVC) = \frac{25.49\ g/cm^2}{1.58\ g/cm^3} = 16.0\ cm.}$$

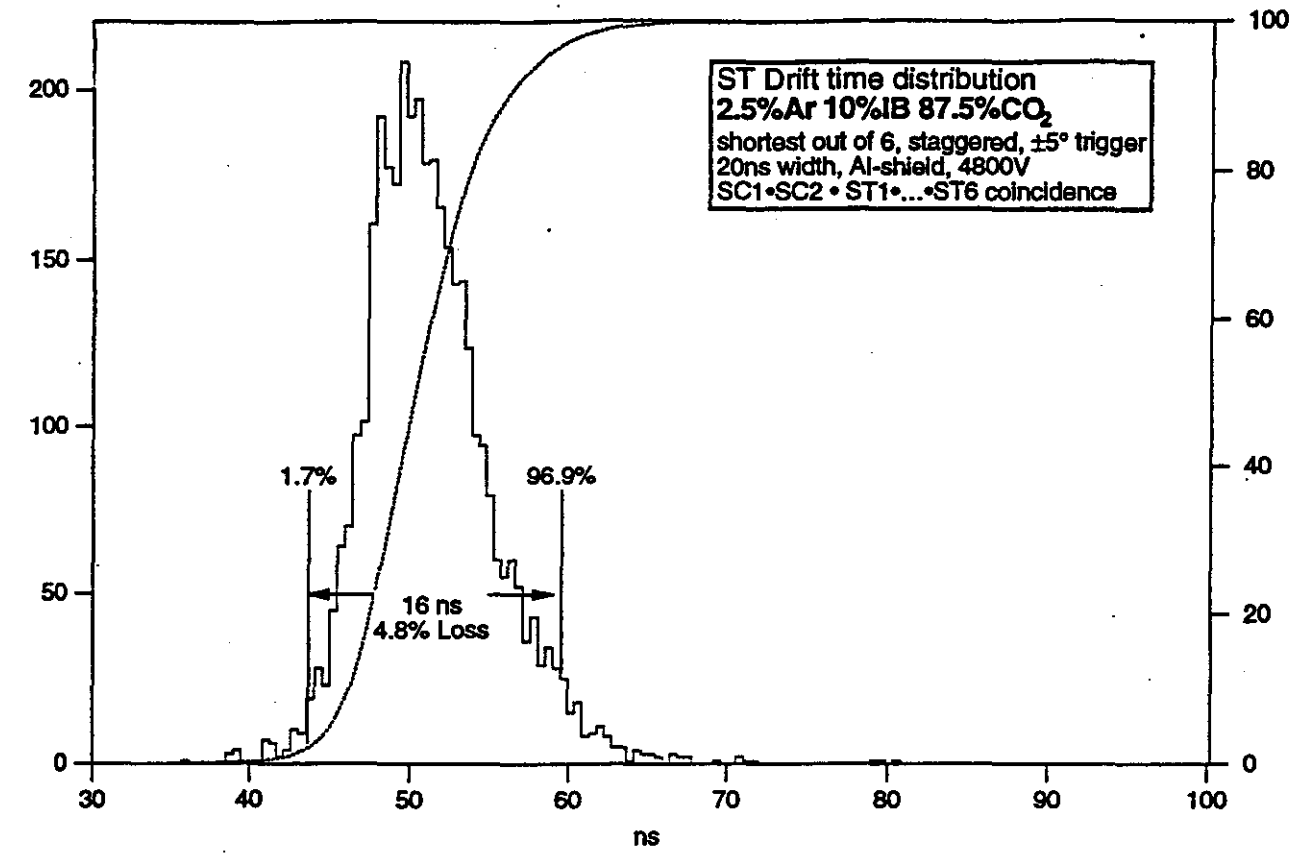
ST Drift time distribution
2.5%Ar 10%IB 87.5%CO2
shortest out of 6, staggered, ±5° trigger
20ns width, Al-shield, 4800V
SC1•SC2 • ST1•...•ST6 coincidence
1.7%
96.9%
16 ns
4.8% Loss
ns

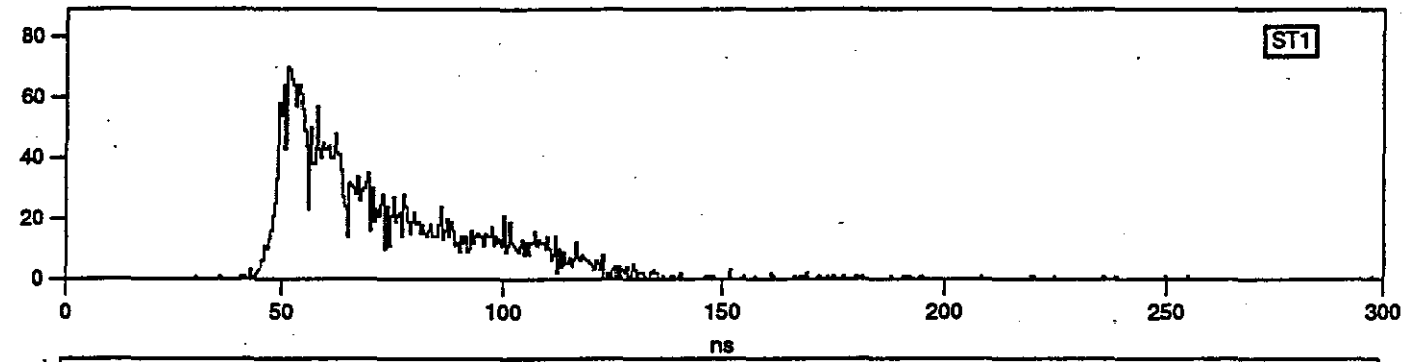
ST1
ns

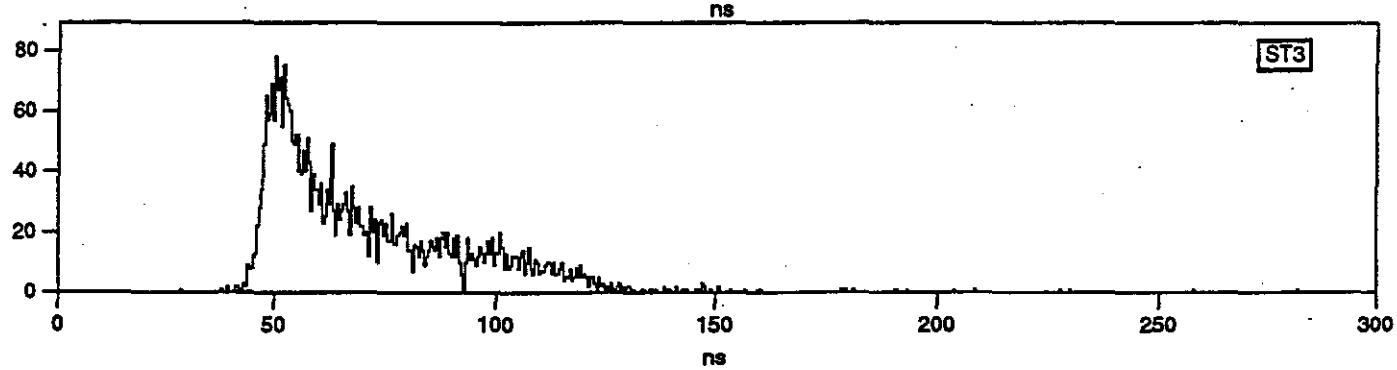
ST3
ns

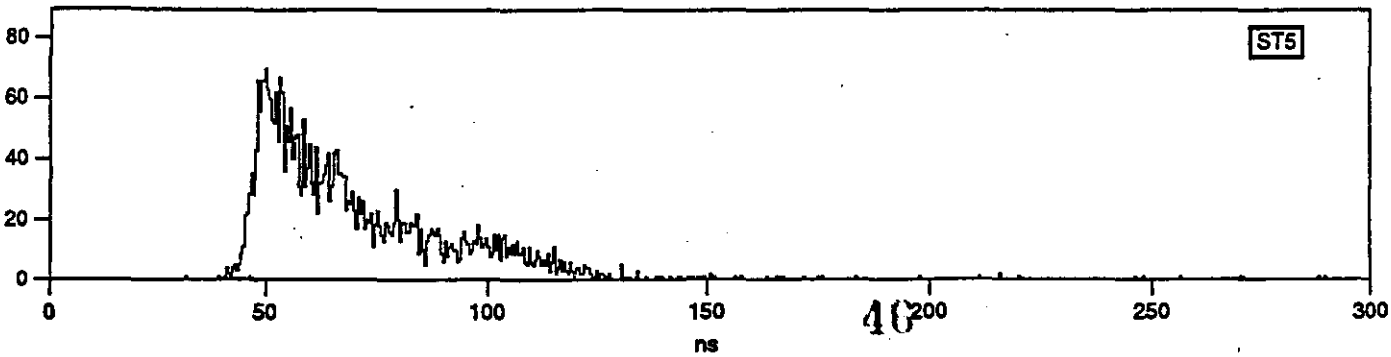
ST5
ns

Table 1. Radiation Length Comparison Between 1 cm pitch OPC and Baseline

Component	X_0(cm)	Baseline thickness (cm)	Baseline r.l.	1 cm OPC thickness (cm)	1 cm OPC r.l.
NOMEX Core	1400	7 x 1.9	0.0095	7 x 1.9	0.0095
Strip board G10	19.4	14 x 0.05	0.0361	14 x 0.05	0.0361
Strip Board Cu	1.43	14 x 0.0017	0.0166	14 x 0.0017	0.0166
Epoxy edges (5.3 %)	31.2	7 x 1.9 x 0.053	0.0226	7 x 1.9 x 0.053	0.0226
G10 gap frame (8.4%)	19.4	6 x 8 x 0.084	0.0208	-	0
open profile chambers	16.0	-	0	6 x 0.433	0.1626
Chamber r.l. Subtotal			0.1056		0.2474

Proposed R&D to reduce r.l. and to speed up trigger time

1. reduce cell size and wall thickness by 0.8 - 0.4

2. Two/4 back-to-back profiles in one sheath

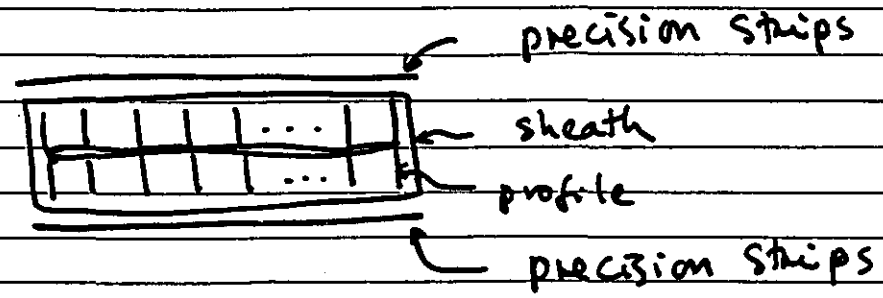

6-gap module has 3 chamber gaps & 4 panels

Reduce chamber material by $\sim \frac{5}{8} \sim 0.75$

3. Use Halogen-free plastics $X_0 \sim 40$ cm ??

Table 2 Comparison between Baseline and OPC (0.8 cm cell size and double profile)

Component	X_0(cm)	Baseline thickness (cm)	Baseline r.l.	0.8 cm OPC thickness (cm)	0.8 cm OPC r.l.
NOMEX Core	1400	7 x 1.9	0.0095	4 x 1.9	0.0054
Strip board G10	19.4	14 x 0.05	0.0361	8 x 0.05	0.0206
Strip Board Cu	1.43	14 x 0.0017	0.0166	8 x 0.0017	0.0095
Epoxy edges (5.3 %)	31.2	7 x 1.9 x 0.053	0.0226	4 x 1.9 x 0.053	0.0129
G10 gap frame (8.4%)	19.4	6 x 8 x 0.084	0.0208	-	0
open profile chambers	16.0	-	0	6 x 0.260	0.0975
Chamber r.l. Subtotal			0.1056		0.1459

10% 15%

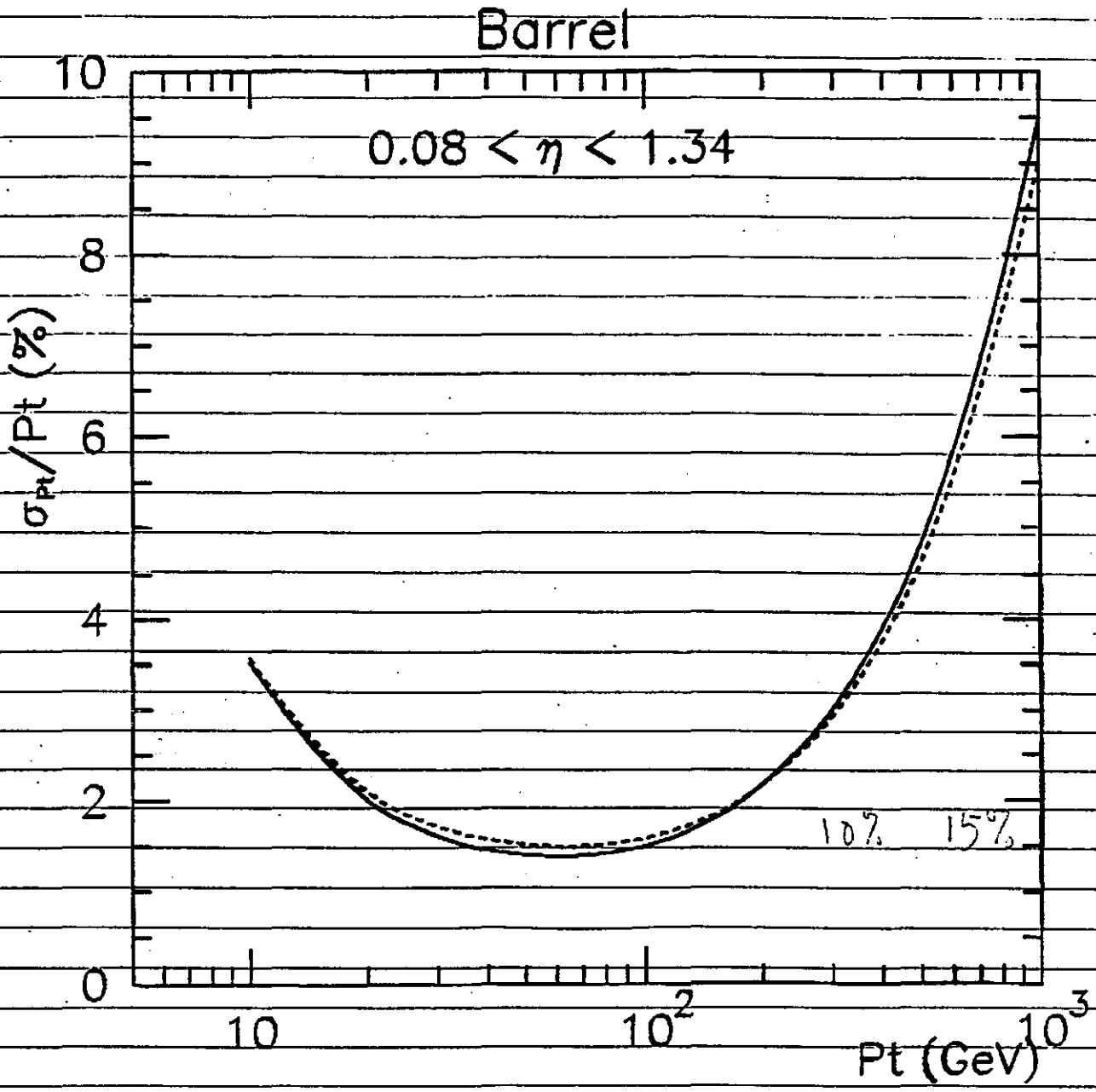
Barrel
0.08 < η < 1.34
σPt/Pt (%)
10
8
6
4
2
0
10
10^2
10^3
Pt (GeV)
10%
15%