GEM TN-93-396

GEM Collaboration Council Meeting - SSCL

March 18-19, 1993

Abstract:

Agenda, attendees, and presentations of the GEM Muon Review Meeting held at the SSC Laboratory on March 18-19, 1993.

gem

γeμ

Presentation by:

G. Yost

GEM Council Meeting

March 18, 1993

Future meetings:

San Diego	May 10, 11, 12
SSCL	June 30 (Wed!)
SSCL	Aug 5
SSCL	Sept 30
General meeting (Volunteers?)	TBA
SSCL	Dec 2

TDR is behind schedule

gem

γeμ

Presentation by:

H. Newman

GEM TDR

- SCHEDULE
- FIGURES
- PAC REQUIREMENTS
- WORKING GROUP SESSIONS
- ROLE of REVIEWERS
- PHYSICS CASE

GEM TDR SCHEDULE

MARCH 15

- Final Draft-Versions Submitted To Editorial and Review Board

MARCH 22 ONWARDS

- Weekly TDR Workshops
  - Spokesmen, Authors and Editors
  - Scheduled Focus On Individual Chapters
  - First Session March 25 (Full Day): Muons, Calorimeter, Tracker

APRIL 9: FINAL CHAPTERS SUBMITTED

APRIL 10 ONWARDS

- Daily Chapter-Editing
- Full Time Figure Processing
- TDR Integration: Global Editing
- Final Document Processing: Text and Figure Layout

APRIL 27 – 30

- Document Reproduction
- Final Check In Time for Submission

GEM TDR OUTLINE

Final Chapters Due April 9

	Section	Page	Lead Authors
1	Executive Summary; Detector Overview [*]	25	Barish, Willis
2	Physics Goals and Performance [*]	90	Lane, Zhou, Barish Paige
3	Magnet	50	Stroynowski
4	Muon Spectrometer [*]	100	Taylor, Marx
5	Calorimeters [*]	100	Gordon, Willis, Rutherfoord, Lissauer
6	Tracker [*]	80	Baltay
7	Electronics	90	Shaevitz, Marlow
8	Computing, Controls, Networking [*]	30	McFarlane,Cormell
9	Facilities, Assembly and Installation	40	Harris
10	Detector Operations, Access and Maintenance	20	Harris
11	Detector/Beamline Interface	8	Wisniewski, Morgan, Chapman
12	Detector Upgrades and Staging Options [*]	10	Willis, Barish
13	Radiation Environment and Shielding	25	Diwan, Waters
14	Beam Testing and Calibration	20	Yost
15	Organization Plan	8	Baltay
16	Environmental Safety and Health	24	Woolley
17	Cost Estimate Summary; Responsibility Matrix; Funding Plan [*]	10	Sanders, Barish, Willis
		730 Pages	

GEM TDR
DOCUMENT ISSUES

- FINAL DRAFT WAS DUE MARCH 15
- TDR TEXT FOLDERS:
  To Be Updated, With Figures
- FINAL LIST OF FIGURES WAS DUE MARCH 15
  - Number, Caption, Producer, Format
- TRACKING AND SUBMITTING FIGURES
  - Managed by One Person Per Chapter
- SUBMIT FIGURES NOW
  - Formats: EPS Is Preferred;
    CGM, DFX, PICT Supported
  - Topdrawer: If You Must.
    Use Special Version
  - Need to Minimize Number of Figures
    Submitted as Hardcopy or Bitmap
- BEGIN TEXT AND FIGURE LAYOUT:
  Start Some Chapters By March 31

Figure Preparation: An Example

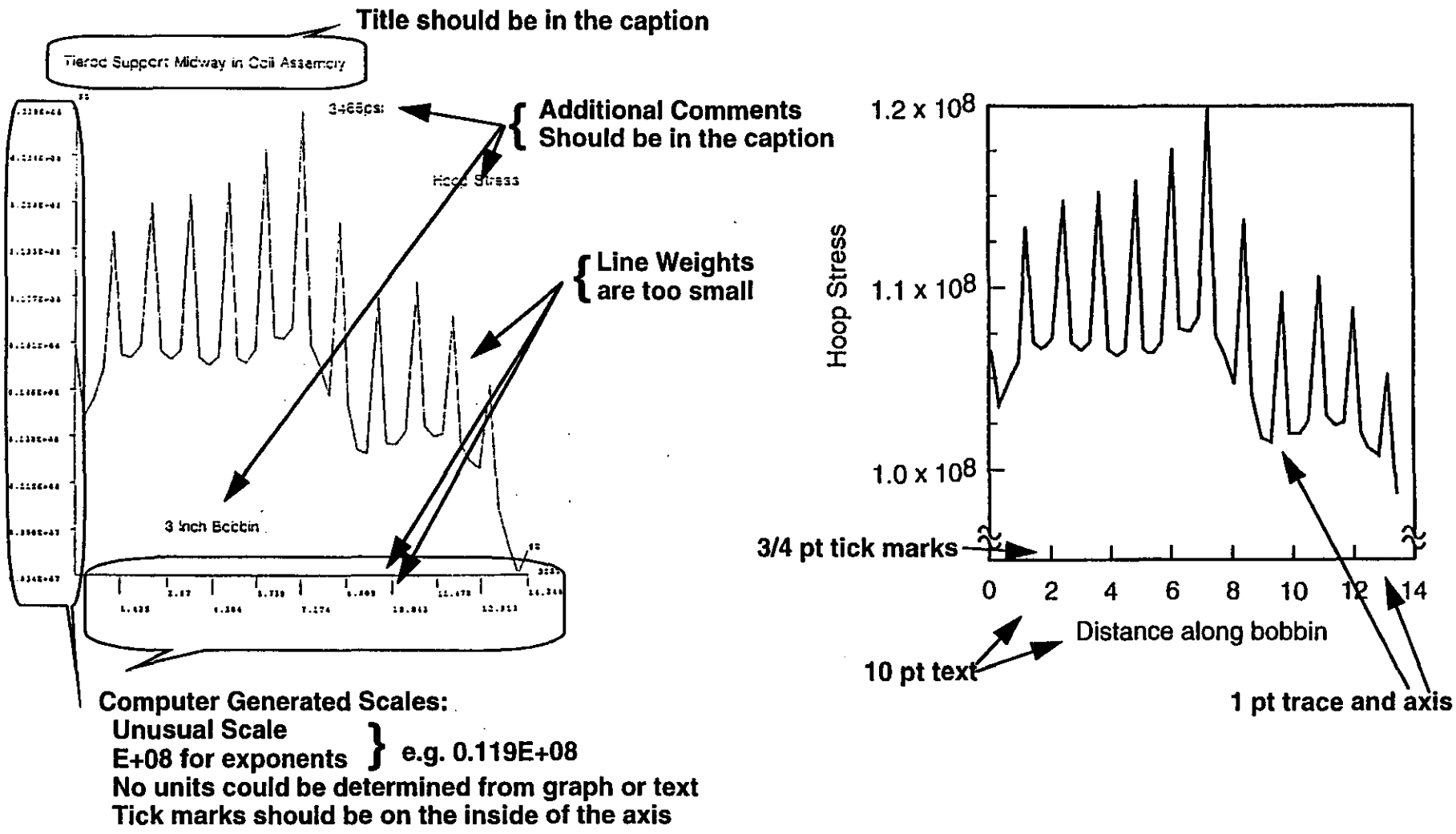

Figure Preparation: Guidelines

- Graphic Styles
  - 1 pt traces
  - 1 pt axes
  - 3/4 pt tick marks
  - 10 pt labels and text
  - No Title--The caption takes its place
  - Most comments should appear in the caption
  - Remember--Most figures will be produced 3.5" wide
- *All graphics must be of publication quality* -- Police yourselves
- Please follow figure file labeling conventions
- Please ftp figures to GEMTDR on SSCVX1
- Submit figures early--Modification requires ~1 hr. per figure

Figure Preparation: Guidelines

- Acceptable file formats
  - .PICT
  - .eps
  - .ps possible (but preferably .eps)
  - .CGM
  - .iges
  - .dxf
  - Adobe Illustrator
- ***Important: Do not submit figures in RTF or Microsoft Word Format***
- Please submit a hardcopy for accuracy checks

For each of these subsystems, the TDR or accompanying Cost and Schedule (including WBS dictionary) and detector-specific Project Management Plan (including plans for quality implementation, advanced acquisition, and configuration management) should contain details on:

- design requirements and performance goals,
- selection of technology and potential risks,
- performance and cost optimization,
- performance of similar systems and R&D results,
- future R&D and prototyping,
- conceptual design of electronics and readout,
- calibration/alignment schemes, and monitoring,
- fabrication methods,
- assembly and installation,
- procedures for maintenance and repairs,
- test beam needs at SSCL and elsewhere,
- costs, schedule, and funding profile
- options for staging and upgrades,
- potential environmental and safety issues, and
- subsystem management and responsibilities of individual institutions for this subsystem.

GEM TDR OUTLINE

INTERNAL REVIEWERS

	Section	Internal Reviewers
1	Executive Summary; Detector Overview	Sanders, Slattery, Marx
2	Physics Goals and Performance	Baltay, Brau, Marx, Rutherfoord
3	Magnet	Taylor, Barish
4	Muon Spectrometer	Brau, Rosenson
5	Calorimeters	Marx, Shaevitz
6	Tracker	Stroynowski, Whitaker
7	Electronics	McFarlane, Willis
8	Computing, Controls, Networking	Mount
9	Facilities, Assembly and Installation	Wisniewski
10	Detector Operations, Access and Maintenance	Sanders
11	Detector/Beamline Interface	Harris, Plasil
12	Detector Upgrades and Staging Options	Harris, Lane, Plasil
13	Radiation Environment and Shielding	Russ
14	Beam Testing and Calibration	Mockett
15	Organization Plan	Yost, Friedman
16	Environmental Safety and Health	Harris
17	Cost Estimate Summary; Responsibility Matrix; Funding Plan	Samios, Baltay

SPECIAL SUBJECT REVIEWERS: BEGIN CHAPTER STUDY AND REVIEW BY MARCH 22

	Subject	Reviewer(s)	Chapters
S1	Optimization of Detector Performance/Cost	Sanders	1,2,4–7
S2	Detector Engineering. Design Consistency and Schedule	Harris	3–7, 16
S3	Pattern Recognition and Trigger Efficiencies	Gordon, Willis	2, 4–7
S4	Particle Identification	Kamyshkov, Danilov	2, 4–7
S5	Radiation Environment: Impact on Performance	Wuest	2, 4–7
S6	Detector Simulations	Womersley, Rosenson	2, 4–7
S7	Detector Readout/Electronics Interface	Marlow	4–7
S8	R&D Plans	Webb	3–8,12,14
S9	Physics and Detector Figures	Guo, Shang	ALL
S10	Project Organization and Management	Samios, Baltay	1,15,17,PMP

GEM TDR: CONTENT ISSUES(I)

- DIRECTION
  - Physics Goals Versus Current GEM Performance
  - Approach To Detector Design Optimization
    - Perspective in TDR
    - Prognosis for Optimized Performance
  - Focal Issues For The Subsystems
- STAGING AND UPGRADE STRATEGY
- PHYSICS CAPABILTTY
  - Discovery Time for Low Mass Higgs; High Mass Higgs
  - Top Reconstruction; b-Tagging
  - UHL: Z', SUSY Higgs
- PROOF OF DETECTOR PERFORMANCE
  - Complementarity to SDC
  - Design Optimization, for Performance/Cost
  - Performance at $\mathcal{L} = 10^{34}$

GEM TDR: CONTENT ISSUES(II)

- MUON SPECTROMETER
  - Ability to Detect the Low Mass Higgs; Comparison to SDC
  - Low p_T Momentum Resolution
  - System Acceptance: Including Trigger, Pattern Recognition and Reconstruction Efficiencies
  - Calibration Scheme (Physics Based), To Obtain the High Resolution
  - R&D Program
- CALORIMETER
  - EM Performance Now for $H \rightarrow \gamma\gamma$, $H \rightarrow e^+e^-e^+e^-$ Versus SDC
  - Comparison to EM Design Goals (12/92 PAC)
  - Optimization of EM Resolution; Noise Terms
  - $e/\gamma, e/Jet$ Separation
  - Jet Reconstruction: Obtainable Resolution. Effect of Inhomogeneities, Non-Compensation, Transition Regions
- TRACKER
  - $e/\gamma, e/Jet$ Separation
  - b-Tagging Efficiency
  - Alignment, Calibration (Physics) and Monitoring
  - Material in the Tracker and Reconstruction
  - R&D Program

GEM TDR PRESENTATIONS

- ALL AUTHORS
  - Review Chapter Outline. List of People Responsible; Chapter-Figure Czar
  - Final Figure List
  - Chapter Status
  - Principal Unresolved Issues; Approaches to Solutions
  - Interdependence With Other Chapters
- PHYSICS AND SUBSYSTEM AUTHORS
  - Physics Related Goals
  - Principal Technical Design Parameters
  - Principal Performance Parameters Now
  - Comparison To SDC
  - Comparison Of Performance As Designed Now, To GEM Goals
- SPECIFIC ISSUES TO BE ADDRESSED, By CHAPTER

Superconducting Super Collider
Laboratory

Physics Research Division
GEM Project Department
2550 Beckleymeade Avenue
Mail Stop 2005
Dallas, TX 75237-3946
(214) 708-6325 • FAX (214) 708-6088

March, 3, 1993

Charlie Baltay
Frank Taylor
Dan Marlow
Paul Reardon
Michael Marx
Harvey Newman
Orrin Fackler
Bill Willis
Barry Barish

Gentlemen:

As you know, our TDR deadline of April 30, 1993 is fast approaching. Concerns have been expressed regarding our ability to meet this very tight deadline. Gary Sanders and Mike Harris would like to urge you and your subsystem groups to camp at the SSC Laboratory full-time until the April 30 deadline in an effort to complete the TDR starting next week, March 8, or as soon as possible.

I will be locating offices and computers for Harvey and Orrin.

Thanks,

Holly

cc: Gary Sanders
Mike Harris

gem

γeμ

Presentation by:

B. Barish

BARISH.

Overview

1.1 Introduction

- Collaboration (who)
- GEM Experimental Goals (what)
- Physics Ability (why)

1.2 GEM Detector Design

- Overall Concept of Detector

1.2.1 Magnet

1.2.2 Muon

1.2.3 Calorimetry

1.2.4 Central Tracker

1.2.5 Detector Integration
Overall Optimization / tradeoffs

1.3 GEM Implementation

1.3.1 Facilities (strategy)

1.3.2 Assembly / Schedule

1.3.2 Access / Maintenance / Upgrades

1.4 GEM Collaboration & Organization

GEM DETECTOR

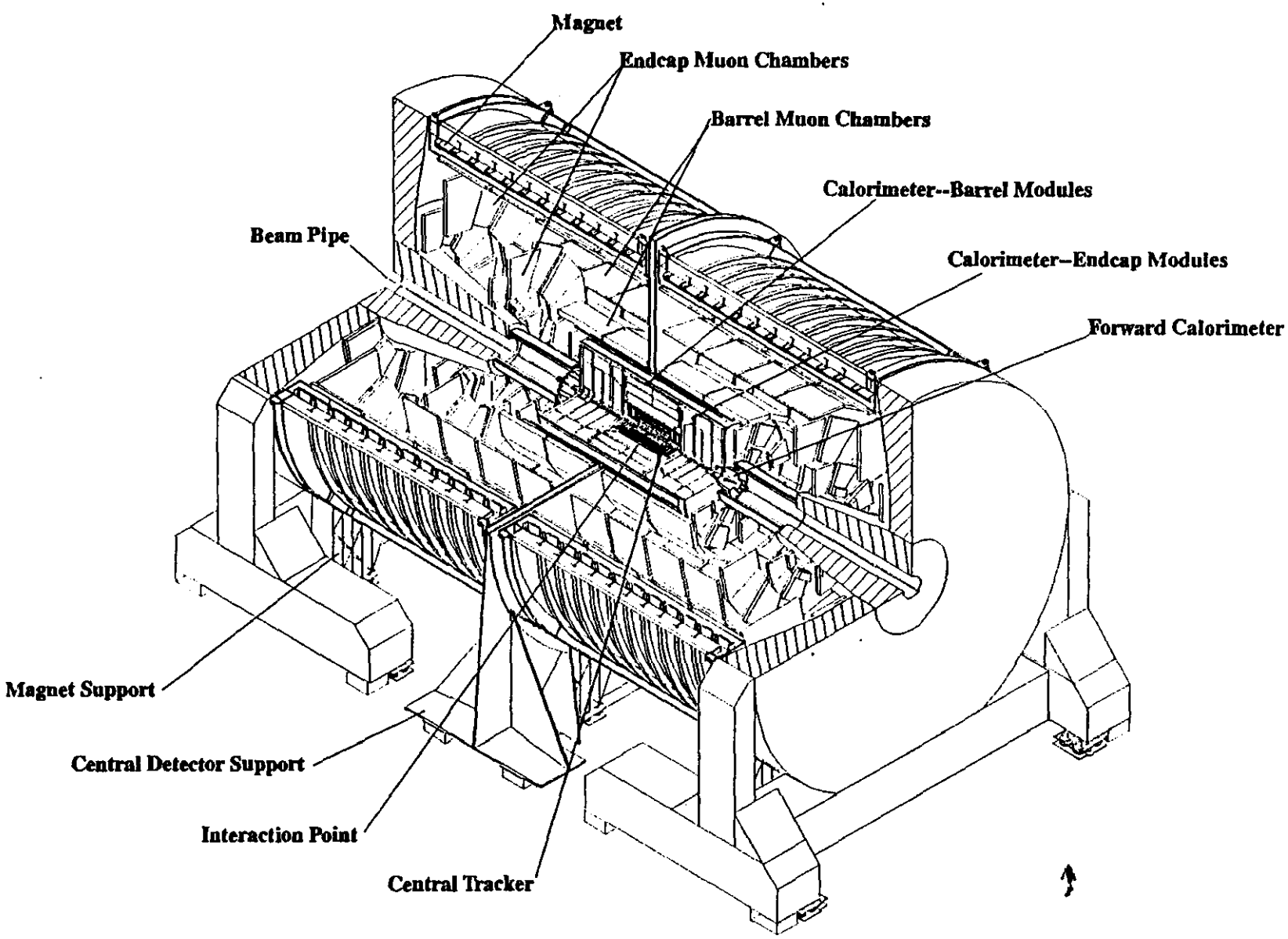

GEM DETECTOR LAYOUT

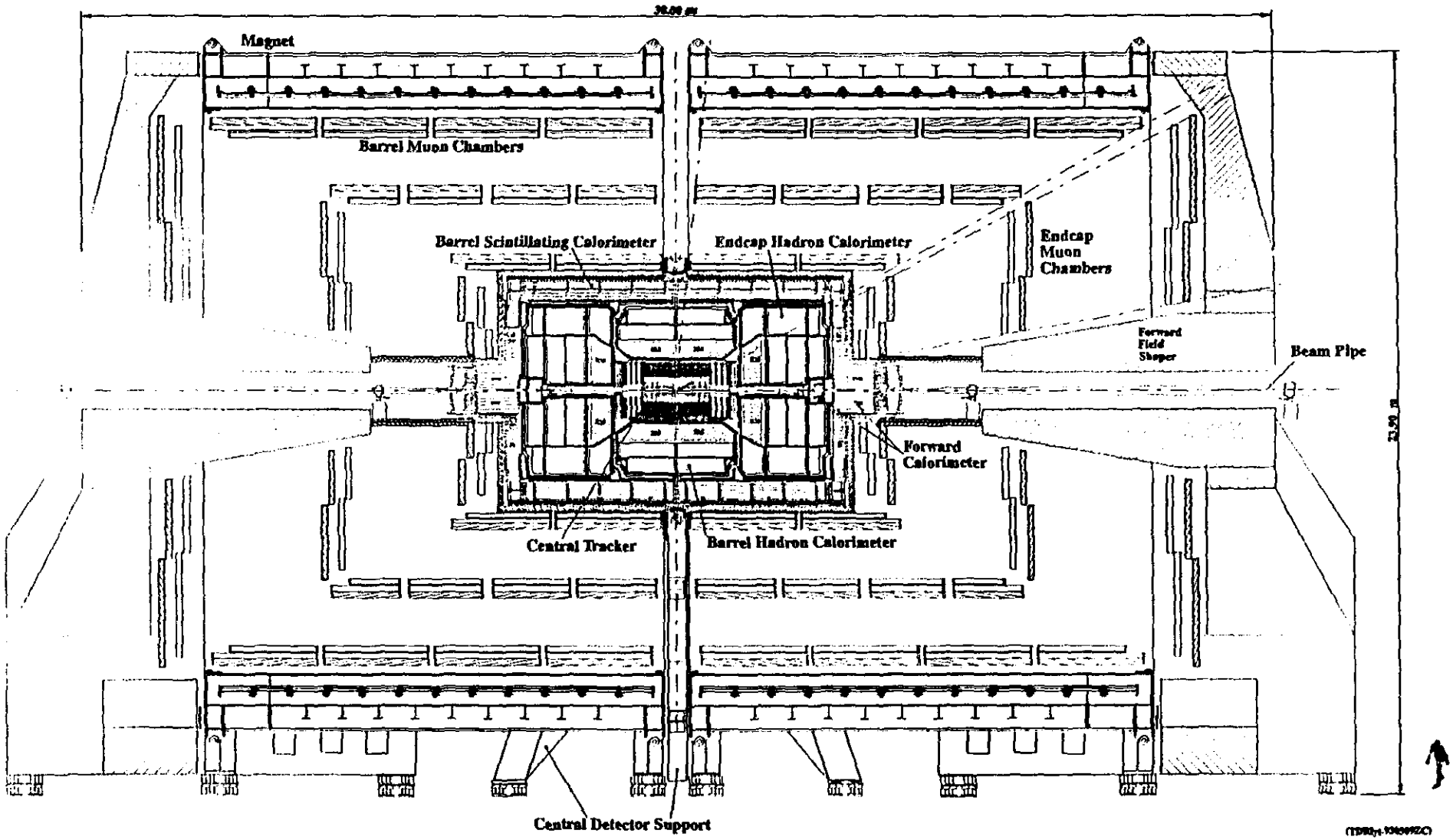

GEM DETECTOR SECTION

(Z=1 M RIGHT VIEW)

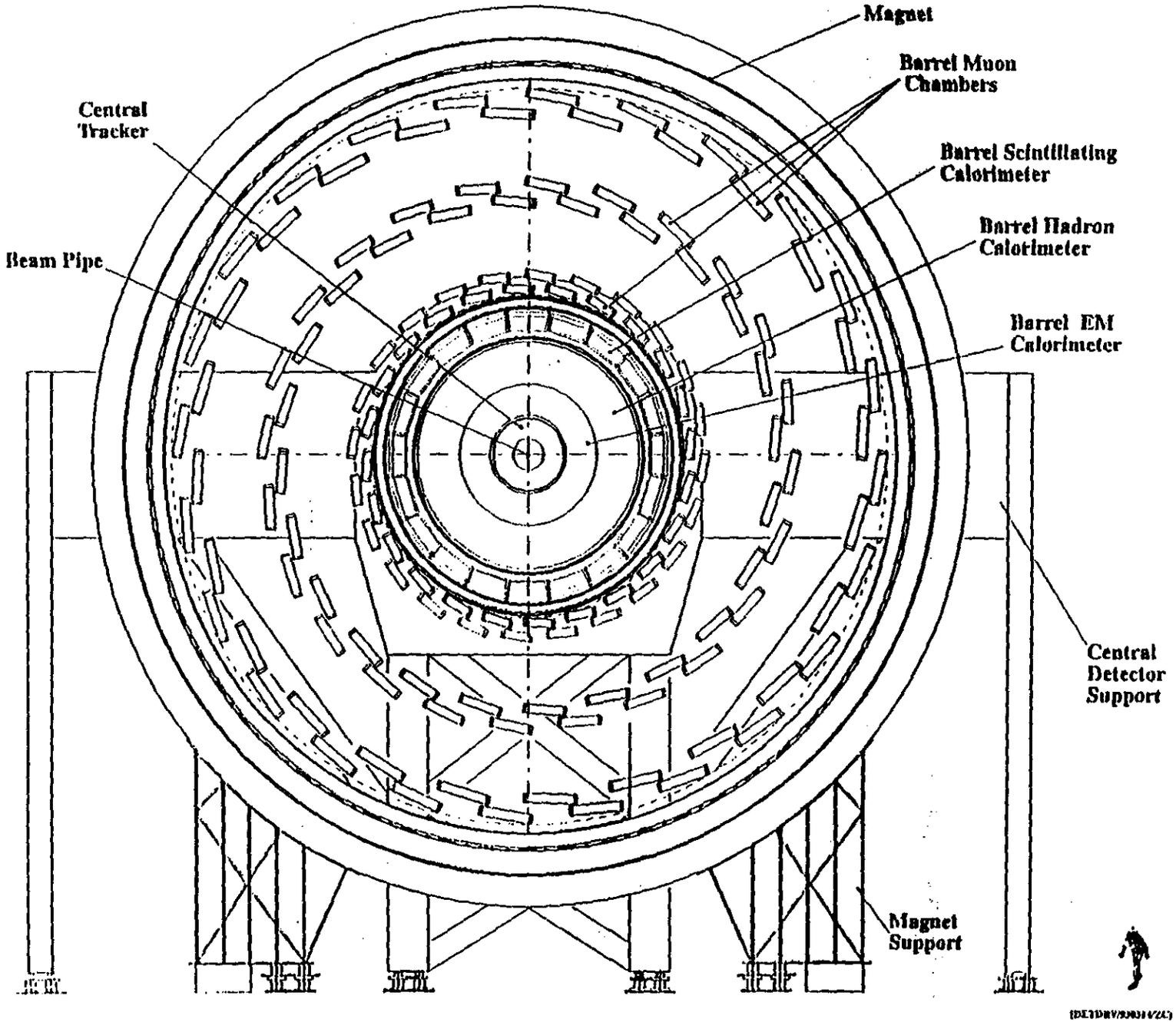

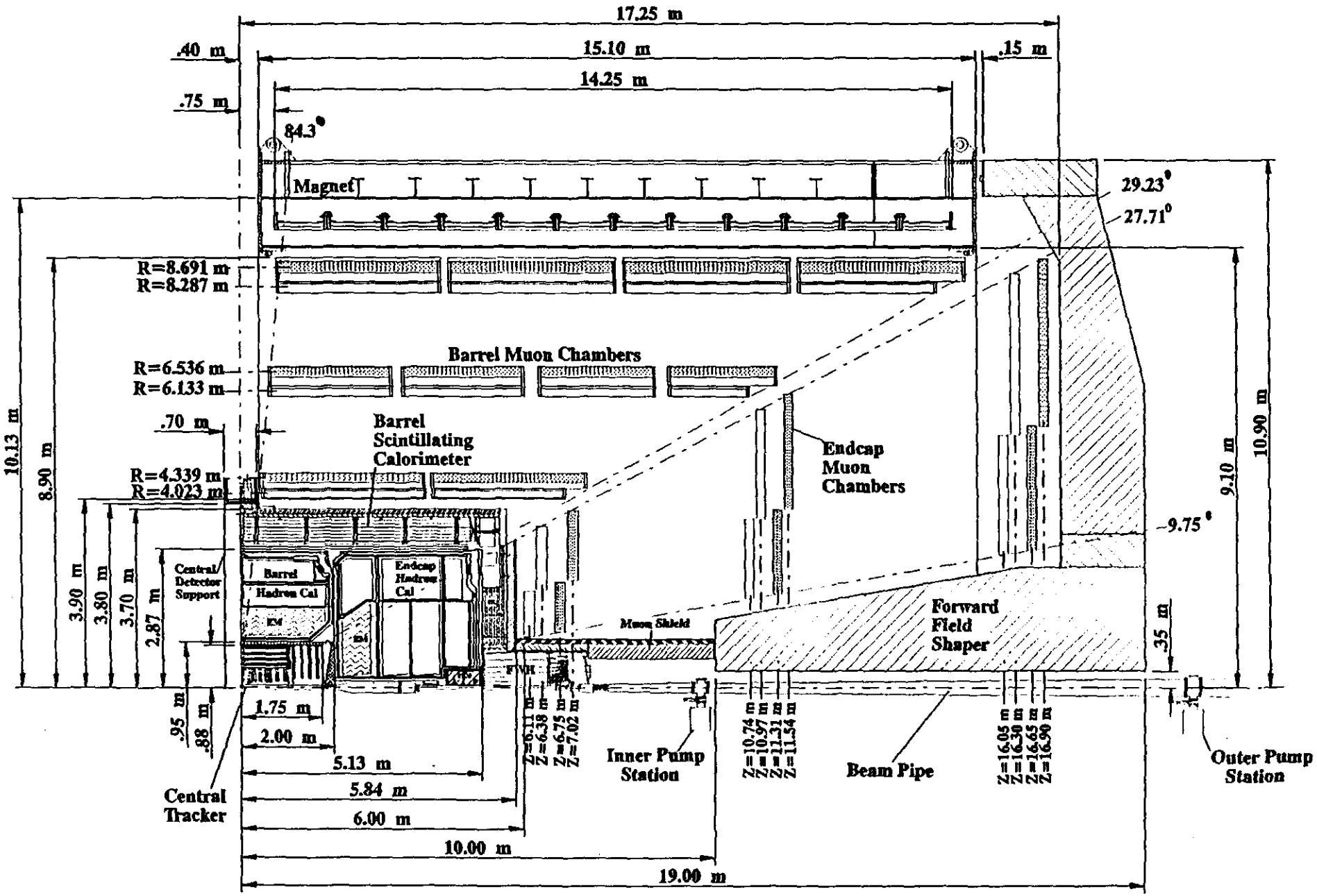
17.25 m
.40 m
15.10 m
.15 m
14.25 m
.75 m
84.3°
Magnet
29.23°
27.71°
R=8.691 m
R=8.287 m
Barrel Muon Chambers
R=6.536 m
R=6.133 m
.70 m
Barrel Scintillating Calorimeter
R=4.339 m
R=4.023 m
Endcap Muon Chambers
10.13 m
8.90 m
3.90 m
3.80 m
3.70 m
2.87 m
Central Detector Support
Barrel Hadron Cal
Endcap Hadron Cal
EM
Muon Shield
Forward Field Shaper
-9.75°
9.10 m
10.90 m
.35 m
.95 m
.88 m
1.75 m
2.00 m
5.13 m
5.84 m
6.00 m
10.00 m
19.00 m
Central Tracker
Z=6.11 m
Z=6.38 m
Z=6.75 m
Z=7.02 m
Inner Pump Station
Z=10.74 m
Z=10.97 m
Z=11.31 m
Z=11.54 m
Beam Pipe
Z=16.05 m
Z=16.30 m
Z=16.65 m
Z=16.90 m
Outer Pump Station

gem

γeμ

Presentation by:

K. Lane

PHYSICS GOALS AND PERFORMANCE OF THE GEM DETECTOR

OUTLINE OF GEM TDR CHAPTER 2 — ASSIGNMENTS and STATUS

Kenneth Lane - Lead Author
Frank Paige - Associate Lead Author, Figure Maven and TEXpert
Bing Zhou - Experimental Overseer

2.1 INTRODUCTION

Responsible Person: K. Lane

Status: Complete

(a) Primary goals of GEM: Electroweak and flavor symmetry breakings; Other physics beyond the standard model, including triviality bounds and "none of the above"; Physics at $\mathcal{L} = 10^{33}$ and $10^{34}\,\mathrm{cm}^{-2}\,\mathrm{s}^{-1}$.

(b) Importance of two complementary detectors.

(c) Overview / summary of Chapter 2.

2.2 MODELING THE GEM DETECTOR

Responsible Person: F. Paige

Contributors: R. Carey, K. McFarlane, T. Skwarnicki, H. Uijtterwaal, B. Zhou

Status: 75% complete; finished by March 26

2.2.0 Brief recapitulation of subsystems: CT, EC, HC, FC, MU, TR/DAQ — general description, coverages, cell sizes, acceptances.

Overview of `gemfast` model of GEM.

Shortcomings, approximations of the physics simulations. Instances where more detailed simulations are used.

2.2.1 Event generation via `gemgen`.

2.2.2 `gemfast` simulation of central tracker (CT).

2.2.3 `gemfast` simulations of calorimeters.

EC and HC / SC resolutions.

Missing energy treatment in `gemfast`.

2.2.4. `gemfast` simulation of muon system.

2.2.5 Discuss e, γ, μ identification, geometric and reconstruction efficiencies, neutron and other backgrounds, issues at $\mathcal{L} = 10^{34}\,\mathrm{cm}^{-2}\,\mathrm{s}^{-1}$.

2.2.6 Modeling jets: jet definition; energy resolution; jet energy correction function; "handling" of $e/h \neq 1$; etc. *(including reference to discussion in Calorimetery Chapter on nonlinearity and nonuniformity, gaps and transitions, etc.)*

2.2.7 Trigger simulation: trigger primitives, efficiencies, etc.

2.3 STANDARD MODEL HIGGS PHYSICS

Responsible Person: R. –Y. Zhu (K. Lane, writer)

Contributors: S. Mrenna, S. Schevchenko, X. Shi, H. Yamamoto

Status: 33% complete; finished by April 8

2.3.1 Introduction: Range of M_H covered, H^0 signals over this mass range.

2.3.2 Generalities of H^0 production and detection: Parton distribution functions; generator; GEANT studies where necessary; γ, e, μ ID.

2.3.3 $H^0 \to \gamma\gamma$ ($M_H = 80 - 160\,\mathrm{GeV}$): Introduction; signal and irreducible background; event selections; QCD jet backgrounds; misidentified electron backgrounds; significance of signal; effect of EM resolution.

2.3.4 Associated H^0 production and decay to $\gamma\gamma$: $t\bar{t} + H^0$, $W^+H^0 \to \ell\gamma\gamma + X$ ($M_H = 80 - 160\,\mathrm{GeV}$); backgrounds; event selections; significance of signal; effect of EM resolution.

2.3.5 $H^0 \to ZZ^* \to \ell^+\ell^-\ell^+\ell^-$ for $\ell = e, \mu$ ($M_H = 140 - 170\,\mathrm{GeV}$).

2.3.6 $H^0 \to Z^0Z^0 \to \ell^+\ell^-\ell^+\ell^-$ for $\ell = e, \mu$ ($M_H = 200 - 800\,\mathrm{GeV}$). For the 800 GeV Higgs, this process will be studied at $\mathcal{L} = 10^{33}$ and $10^{34}\,\mathrm{cm}^{-2}\,\mathrm{s}^{-1}$.

2.3.7 $H^0 \to Z^0Z^0 \to \ell^+\ell^-$ jet jet ($M_H = 800\,\mathrm{GeV}$). $Z^0 +$ jets background; jet definition strategies and corrections

2.3.8 $H^0 \to Z^0Z^0 \to \ell^+\ell^-\nu\bar{\nu}$ ($M_H = 800\,\mathrm{GeV}$). Have $Z^0 + \not{E}_T$ background studies been done?

2.4 HEAVY FLAVOR PHYSICS

Responsible Person: C. Yanagisawa (K. Lane, writer)

Contributor: M. Mohammadi

Status: 50% complete; finished by March 26

2.4.1 Discovery and measurement of the mass of heavy top quarks ($m_t \simeq 250\,\mathrm{GeV}$) pair-produced in the process $gg \to t\bar{t}$ and decaying via the standard mode $t \to W^+b$. In this case, one t-quark is tagged via an isolated electron or muon from W-decay plus an inclusive muon. The top-quark mass is determined from the invariant mass distribution, $M_{\ell\mu}$, of the isolated lepton and the inclusive muon. *(Will there be a 2nd isolated lepton of opposite flavor to ℓ_{isol}?)*

2.4.2 Discovery and mass measurement for top quarks with $m_t = 140\,\mathrm{GeV}$ and $250\,\mathrm{GeV}$. The standard $t \to W^+b$ decay mode is assumed and the W-boson and t-quark are observed in their hadronic decay modes, $W \to 2\,\mathrm{jets}$ and $t \to 3\,\mathrm{jets}$. A brief discussion is provided of the search for $\eta_T \to \bar{t}t$ for the case $m_t \simeq 140\,\mathrm{GeV}$ and $M_{\eta_T} \sim 400\,\mathrm{GeV}$.

2.4.3 Discovery and study of a charged scalar H^+ of mass 150 GeV in the decay $t \to H^+b$, for $m_t = 250\,\mathrm{GeV}$. The scalar will be assumed to decay as $H^+ \to \tau^+\nu_\tau \to 1$ or 3 prongs, demonstrating GEM's ability to detect τ-leptons. The study of $H^+ \to c\bar{s}$ is deferred to a GEM Note.

2.5 JET PHYSICS

Responsible Person: R. Carey (K. Lane, co-writer)

Status: 70% complete; finished by March 26

1. Quark substructure in production of jets with high-p_T (deviation from QCD cross sections at $p_T \gtrsim 4\,\mathrm{TeV}$). Studies at $\mathcal{L} = 10^{33}\,\mathrm{cm}^{-2}\,\mathrm{s}^{-1}$ with substructure scale $\Lambda \cong 15 - 25\,\mathrm{TeV}$. Special attention is paid to jet energy measurement issues.

2. Jet issues are also discussed in Sections 2.2.6 (modeling jets), 2.3.7 ($H^0 \to ZZ \to \ell^+\ell^-$ jet jet for $M_H = 800\,\mathrm{GeV}$) and 2.4.2 (W and t-reconstruction in $t \to W^+b \to 3\,jets$).

2.6 PHYSICS AT ULTRAHIGH LUMINOSITY

Responsible Person: K. Lane

Contributors: M. Golden, M. Mohammadi, W. Orrick, E. Simmons, B. Zhou.

Status: 50% complete; finished by March 26

2.6.1 Quark/lepton substructure in $\overline{q}q \to \mu^+\mu^-$ at high invariant mass, $M_{\mu\mu} \gtrsim 2\,\mathrm{TeV}$, and ultrahigh luminosity, $\mathcal{L} = 10^{34}\,\mathrm{cm}^{-2}\,\mathrm{s}^{-1}$. Determination of the chiral structure of the contact interactions for substructure scale, $\Lambda = 25\,\mathrm{TeV}$. Discussion of the search for substructure in $\overline{q}q' \to \mu^\pm\nu_\mu$. Special attention is paid to muon triggering and identification efficiencies; backgrounds from punchthrough and decays; neutron backgrounds discussed in Chapter 13.

2.6.2 Signal and backgrounds for $Z'^0 \to \ell^+\ell^-$, with $\ell^\pm = e^\pm, \mu^\pm$. Precision measurements of mass, width (via e^+e^-) and asymmetries (via $\mu^+\mu^-$) for $M_{Z'} = 4\,\mathrm{TeV}$ and $\int \mathcal{L}\,dt = 100 - 200\,\mathrm{fb}^{-1}$. Determination of the reach in $M_{Z'}$ in the e^+e^- mode. Discussion of the search for $W'^\pm \to \ell^\pm\nu_\ell$. Special attention is paid to high-energy electron energy and direction measurement at $10^{34}\,\mathrm{cm}^{-2}\,\mathrm{s}^{-1}$ and to muon issues as above.

2.6.3 Discussion of signal and backgrounds for color-singlet $\rho_T^\pm \to Z^0W^\pm \to \ell^+\ell^-\ell^\pm + \not{E}_T$ and $\ell^+\ell^-$ jet jet.

2.7 SUPERSYMMETRY AND $\not{E}_T$ SIGNATURES

Responsible Person: F. Paige

Contributors: A. Vaniachine, M. Shupe

Status: 67% complete; finished by March 26

2.7.1 $\tilde{g}$ and $\tilde{q}$ detection via the $\not{E}_T$ signature: $\not{E}_T$ requirements on the detector; simulation of GEM's intrinsic $\not{E}_T$ spectrum and comparison to $\not{E}_T$ due to neutrinos, beampipe; event selection; signal-to-noise.

2.7.2 Mass reach for the $\not{E}_T$ signature.

2.7.3 $\tilde{g}\tilde{g}$ detection via the likesign dilepton signature. Although not strictly a missing-energy process, this complements the preceding search.

2.7.4 Gluino mass determination.

2.8 CONCLUSIONS

Responsible Person: K. Lane

Contributors: F. Paige, B. Zhou, etc.

Status: 0% complete; May be jettisoned!

Possible topics:

2.8.1 Summary tables of discovery significances, reach, discovery/reach time, mass resolutions, etc. Brief summary discussions.

2.8.2 Plans for future simulations work – both detector and physics.

2.8.3 Discussions of how to achieve improvement in problem areas.

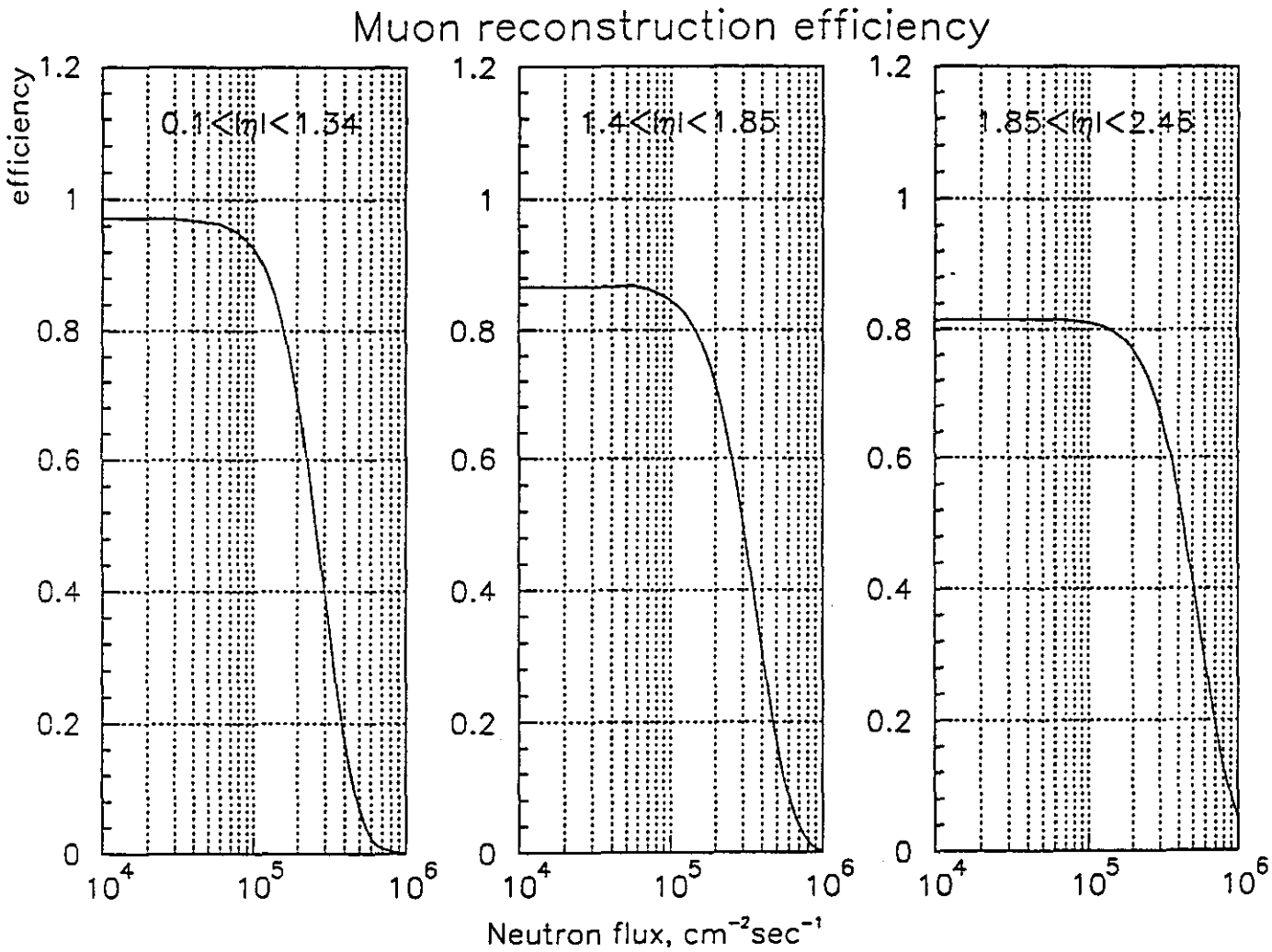
Muon reconstruction efficiency
efficiency
0.1<|η|<1.34
1.4<|η|<1.85
1.85<|η|<2.45
1.2
1
0.8
0.6
0.4
0.2
0
10^4
10^5
10^6
Neutron flux, $cm^{-2}sec^{-1}$

V. GAVRILOV

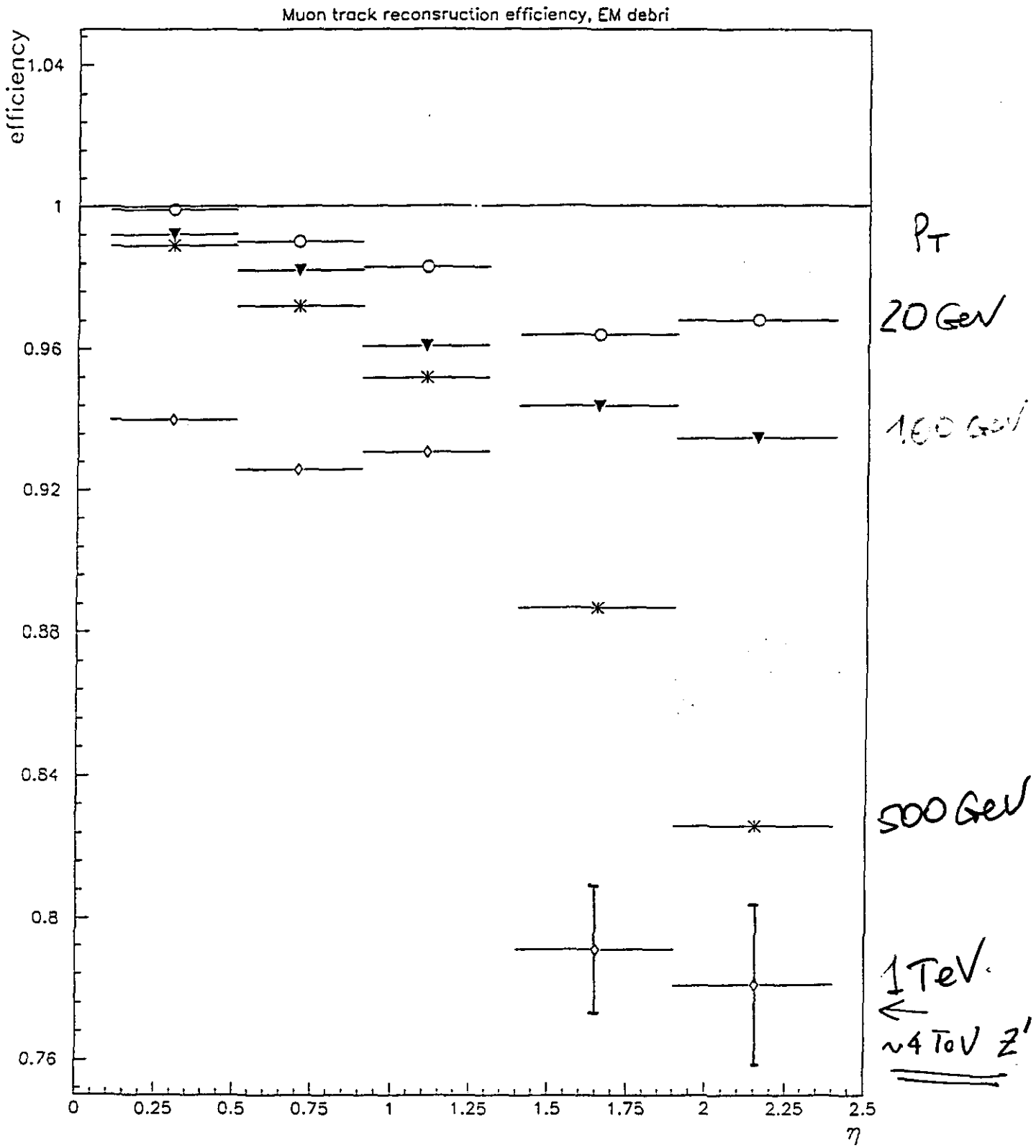

V. Gavrilov

4.4.4.4(c)

(5)

M. Marampoi + W. Orzick

93/03/17 (04.53)

η COVERAGE FROM GEMFAST V2.03

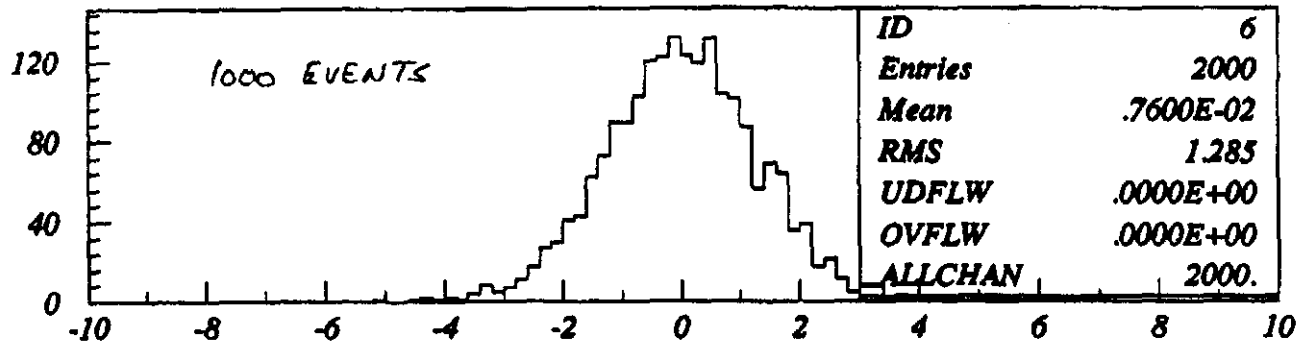

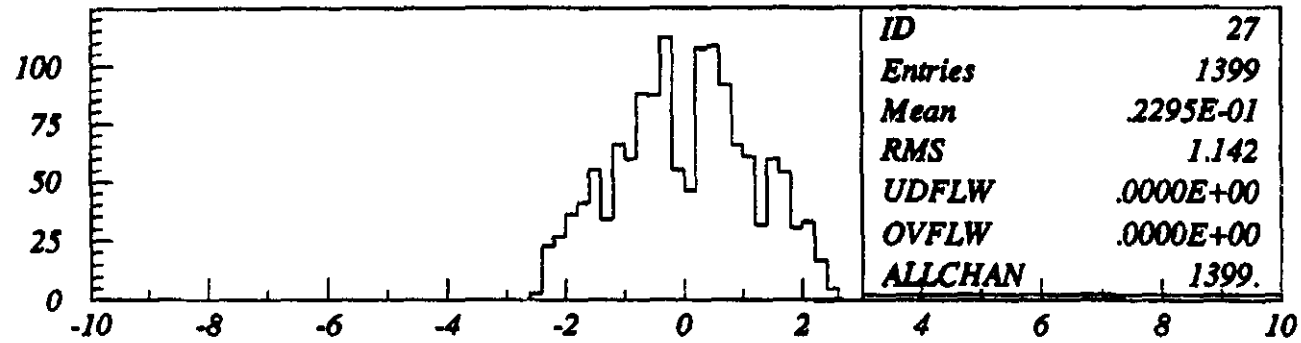

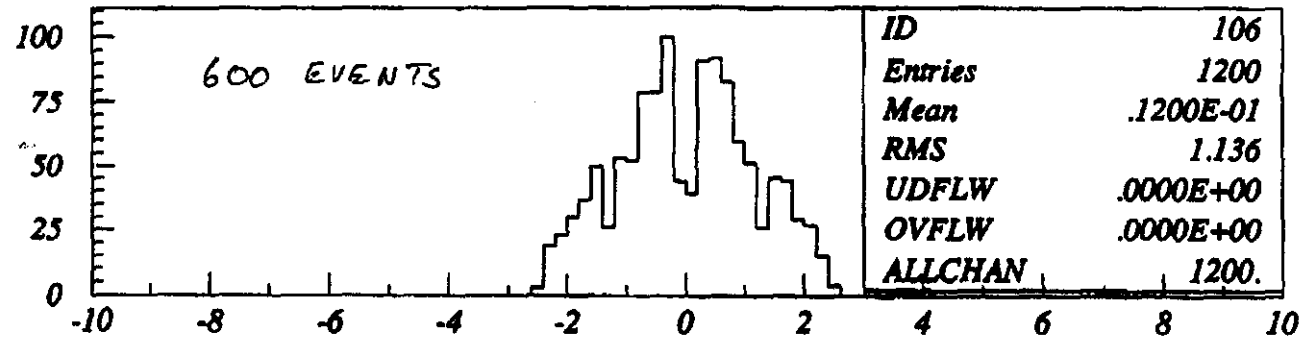

Smeared eta ([redacted] events with 2 surviving mus)

$\frac{1200}{2000} = 60\%$ OF EVENTS HAVE TWO MUONS WITHIN η COVERAGE

LARGEST LOSS OF ACCEPTANCE (40%) ! ← EXPLAIN!

M. Moshammi + W. Orkicic

(2)

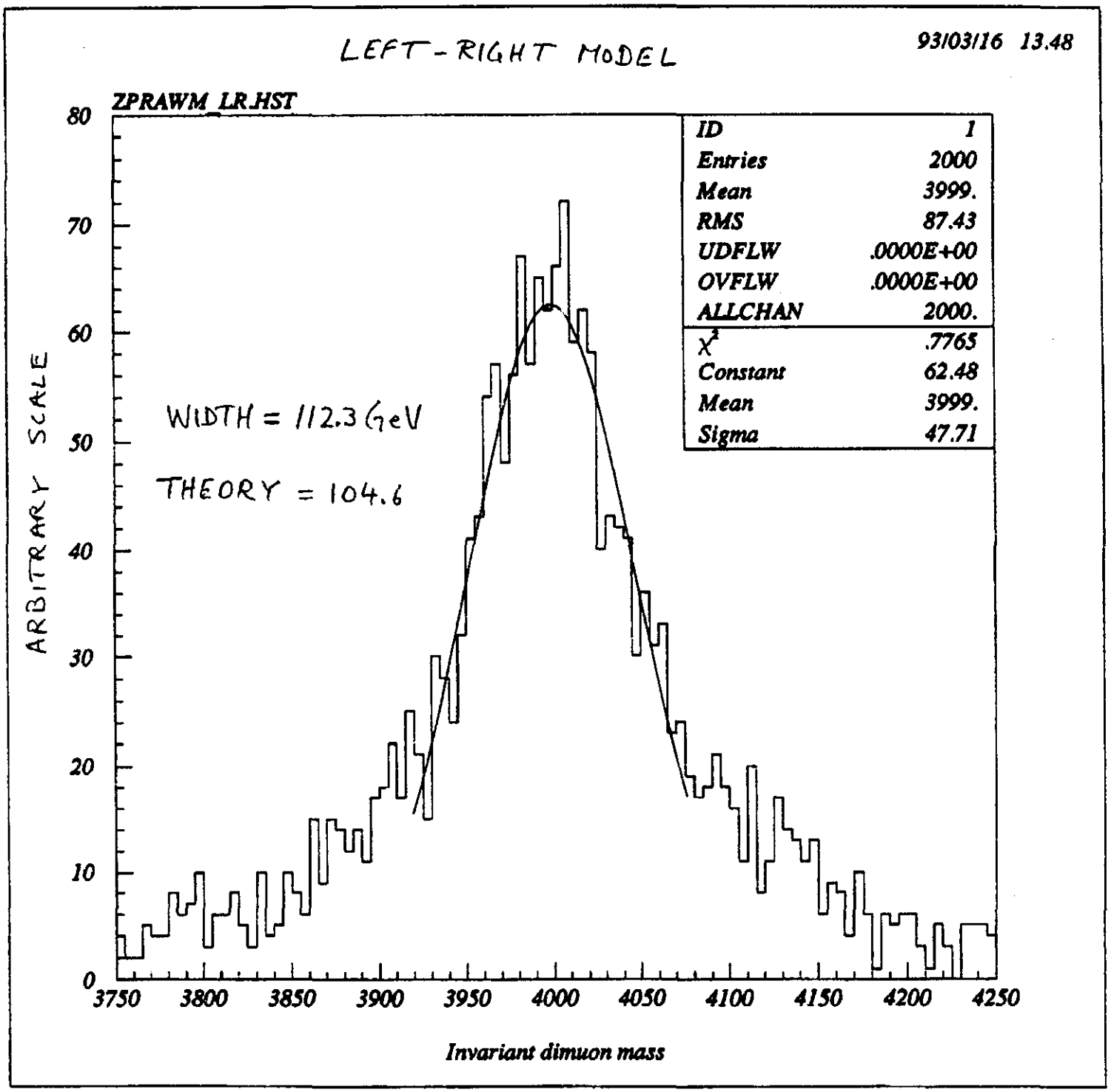

$\sigma \cdot B\,(3.5\ \text{TeV} < m < 4.5\ \text{TeV}) = 6.5\ \text{fb}$

(8)

M. Masmoudi & W. Orzicki

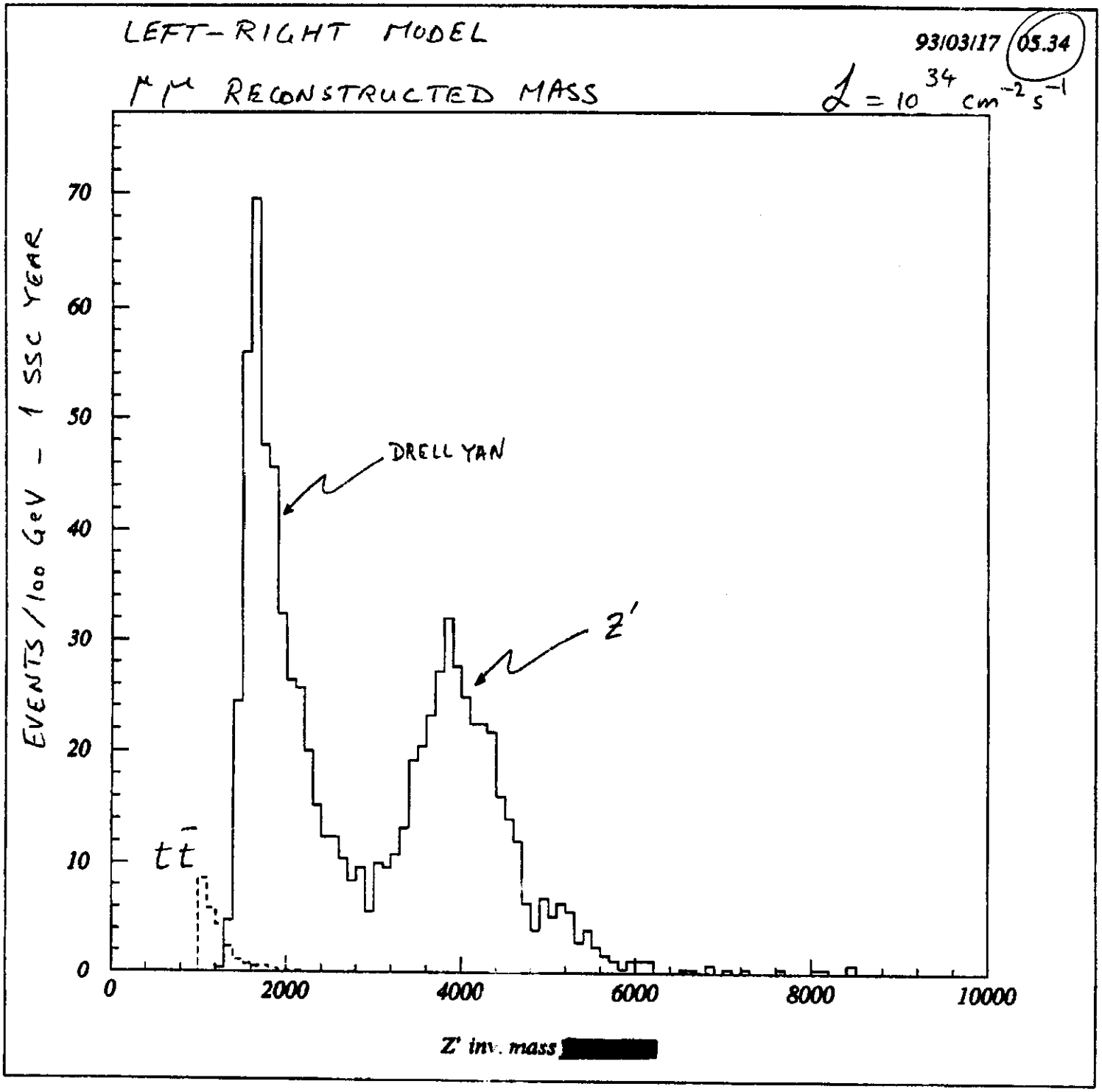

OVERALL Z' ACCEPTANCE 56% LR

54% SO(10) χ

M. Gaconi

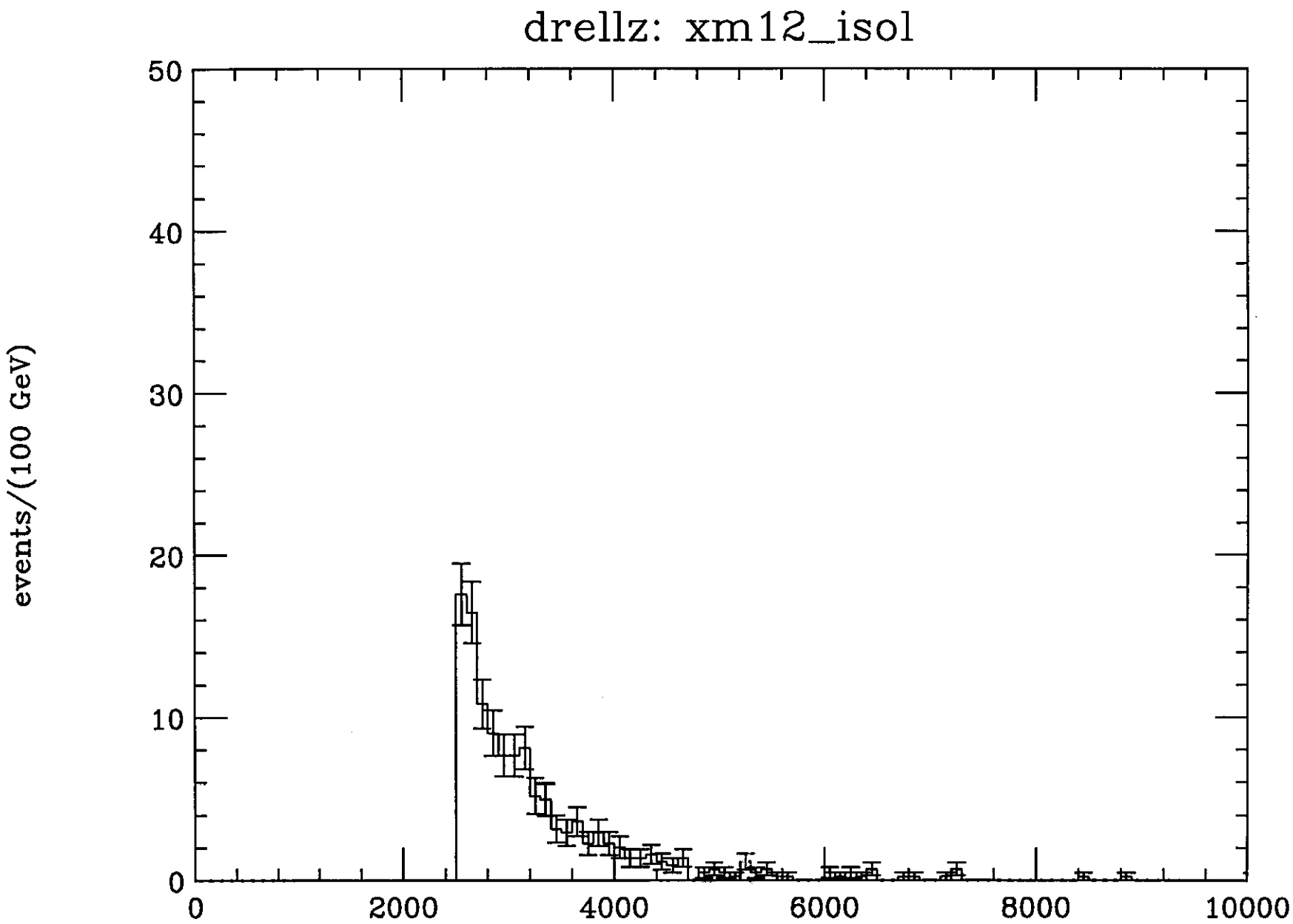
drellz: xm12_isol
events/(100 GeV)
0
10
20
30
40
50
0
2000
4000
6000
8000
10000

M. Gaaw

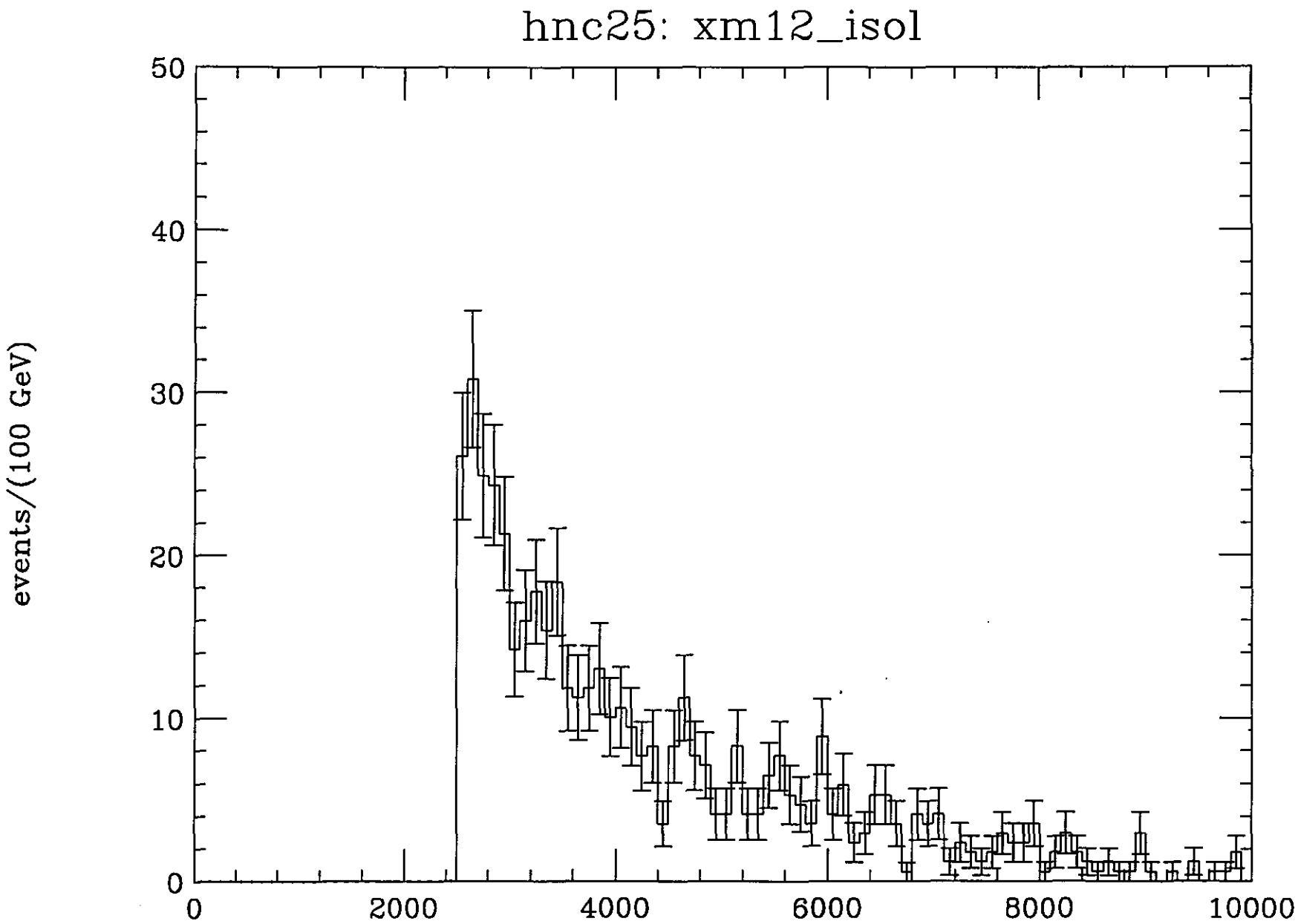
hnc25: xm12_isol
events/(100 GeV)
0
10
20
30
40
50
0
2000
4000
6000
8000
10000

M. Gasser

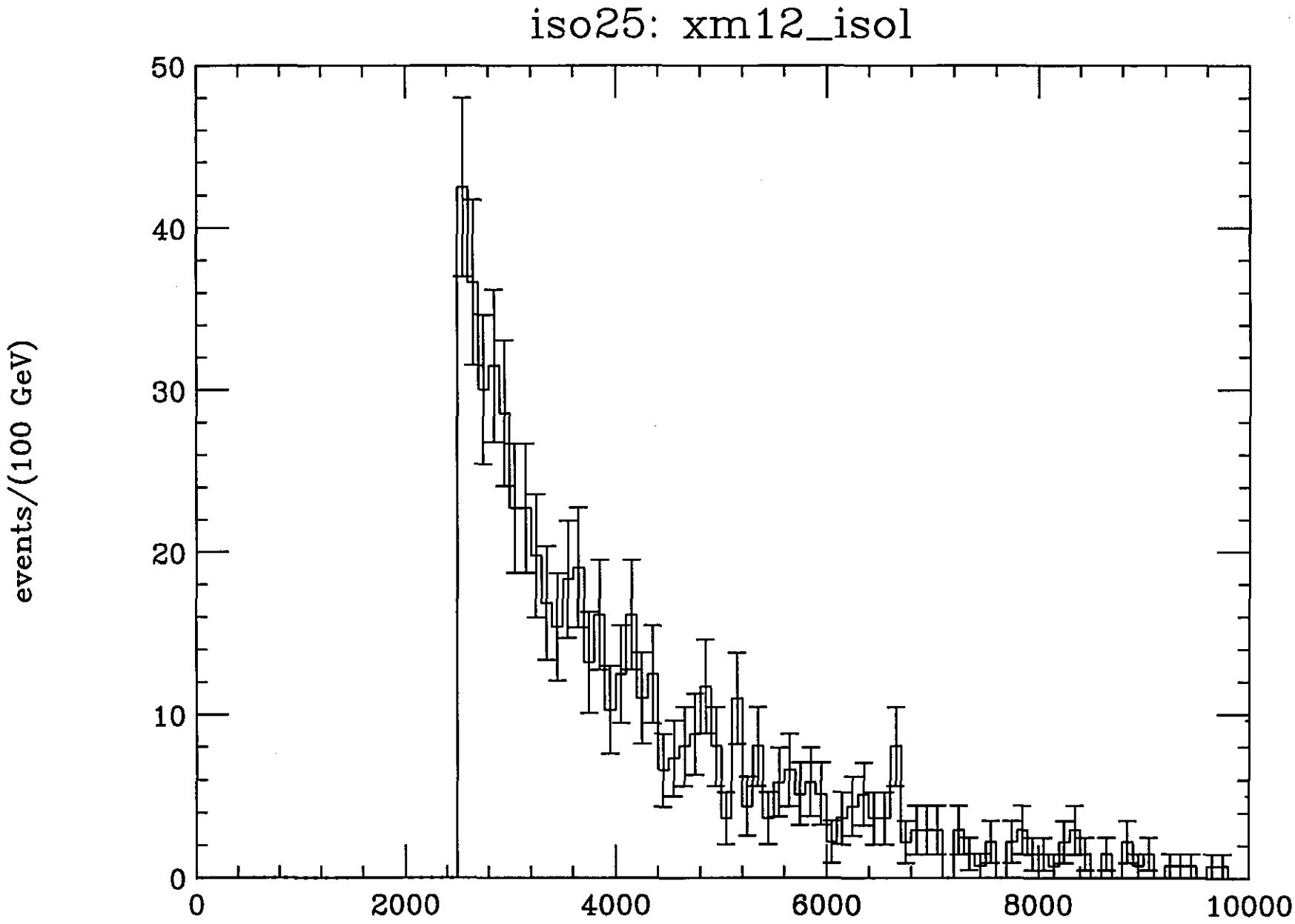
iso25: xm12_isol
events/(100 GeV)
0
10
20
30
40
50
0
2000
4000
6000
8000
10000

M. Golden

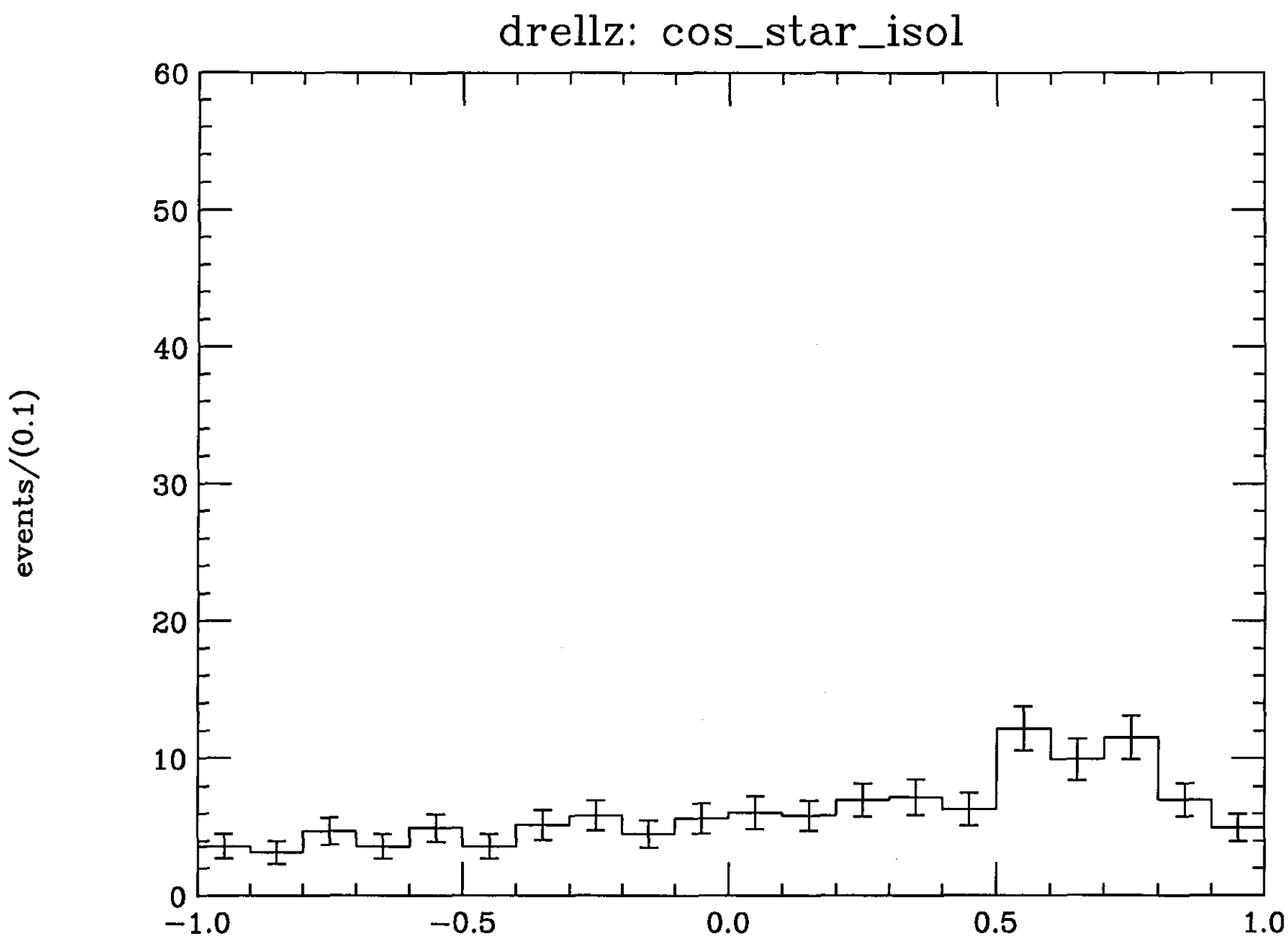

M. Gaspari

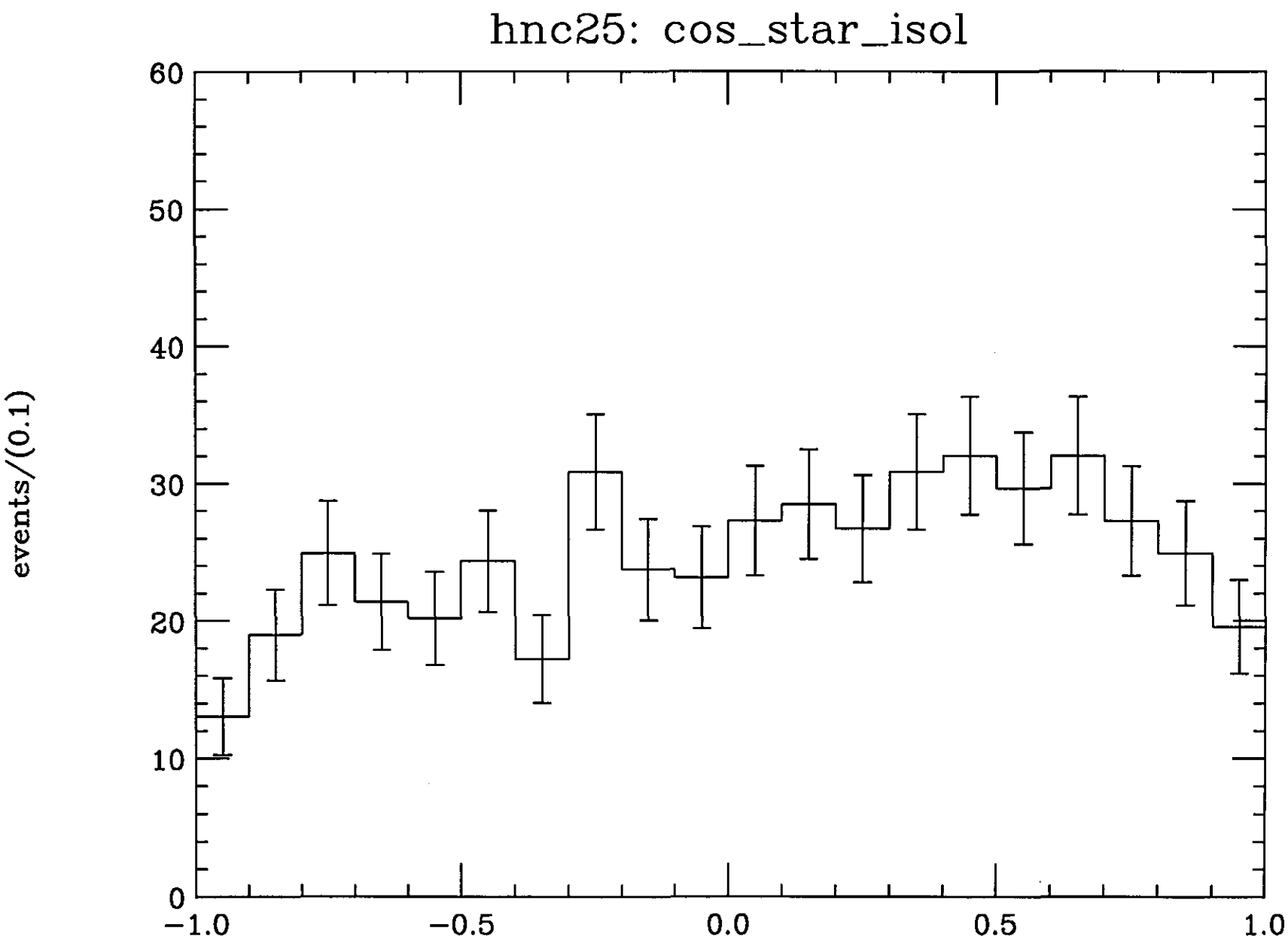

M. Gaari

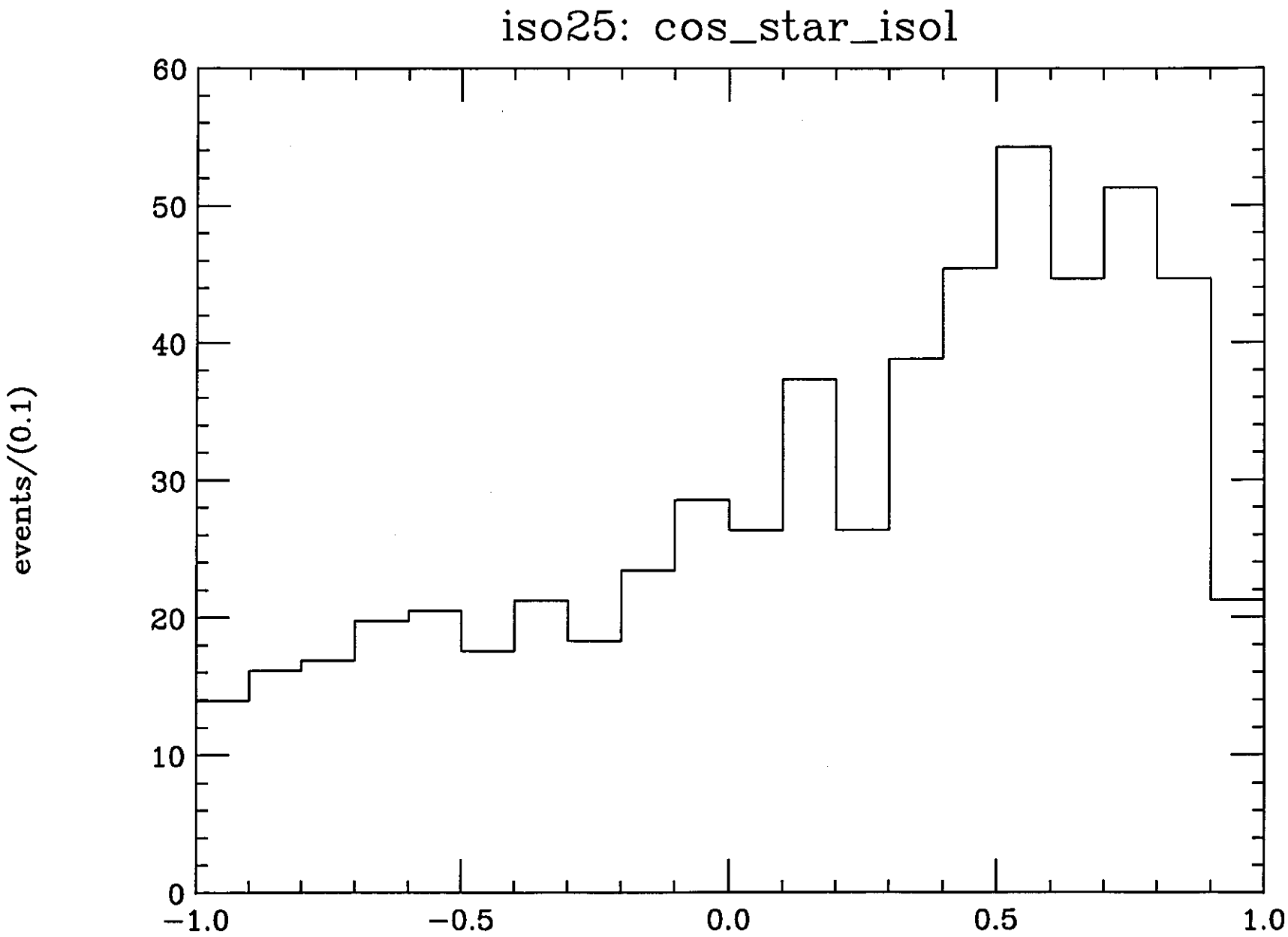

OUTSTANDING PHYSICS & DETECTOR ISSUES

MUONS

1. REAL μ-TRIGGER RATES AT 10^{33}, 10^{34} AS A FUNCTION OF THE TRIGGER-P_T.
   - HENK UIJTERWAAL + ...

2. μ-RECONSTRUCTION EFFICIENCY AS FCN OF η, P_T FOR THE "BASELINE" η-FLUX
   - INCLUDING EVERYTHING - PT, DECAY μ, EM DEBRIS, ... - VLADIMIR GAVRILOV + ...
   - PARAMATERIZE FOR gemfast USERS!

   - OUR JOB IS MUCH HARDER THAN SDC'S - WE - & THE PAC - KNOW MORE!
   - WHAT IS THE η-FLUX AT 10^{34}?

- PLOTS
   - ROGER: DON'T FORGET US!

3. MASS RESOLUTION FOR

$$H^0 \to Z Z^* \to \mu^+\mu^-\mu^+\mu^- \quad (M_H \simeq 140\ \text{GeV}$$

SDC : $\sigma_{M_H} \simeq 800$ MeV
GEM LOI : $\sigma_{M_H} \simeq 1$ GeV
GEM NOW (gemfast) : $\sigma_{M_H} \simeq 1.9$ GeV

POSSIBLE IMPROVEMENTS: COMBINE CT+MU;
USE AVERAGE dE/dx-LOSS IN CA.

– R.-Y. ZHU, SHAWN McKEE

CENTRAL TRACKER

1. γ/e DISCRIMINATION – $H^0 \to \gamma\gamma$ vs. $Z^0 \to e^+e^-$.

   MAXIMUM ALLOWED – $R(\gamma/e) = 1\%$
   DESIRED – $R(\gamma/e) \simeq 0.3\%$
   ACHIEVED – $R(\gamma/e) = 1.6\%$ w/ ~90% γ-ACC

   – A. SUMAROKOV, S. Mc KEE.

2. $Z' \to e^+e^-$ VERTEX RESOLUTION ($M_{Z'} \sim 4$ TeV) AT $\mathcal{L} = 10^{34}$

   – S. Mc KEE

3. b-VERTEX TAGGING – EFFICIENCY?

   - USEFUL, NOT ESSENTIAL, FOR $t \to W^+b \to 3$ jets
   - IMPORTANT FOR $t \to H^+b \to 3$ jets.
   - THE PAC WILL ASK!

   – SAJ ALAM?

CALORIMETRY

1. DEFINING CLUSTER FOR γ, e ($H^0 \to \gamma\gamma$; $4e$)
   - 5×5 OR 3×3 ?

   - HONG MA

2. $R(\gamma/\text{jet})$ FOR $\tilde{g}g \to \tilde{g}\gamma$ IS 5×10^{-4}
   - NEED TO REDUCE BY 2 - 3 !

   - H. MA, R.-Y. ZHU

3. JET MEASUREMENT - CALORIMETER e/h, NONUNIFORMITY, ETC.

   WHAT ARE SYSTEMATIC ERRORS DUE TO NONLINEARITY & NONUNIFORMITY OF CAL.?

   IMPORTANT FOR QCD; Z, W, t - RECONSTRUCTION; $\tilde{g}$ - SUBSTRUCTURE SEARCH; ETC. ETC. ETC.

   - ROB CAREY, JOHN WOMERSLEY, MIKE SHUPE

   WHAT? WHEN?

THE $500 M. QUESTIONS

1. • WHAT IS THE UNIQUE PHYSICS MISSION OF THE MUON SYSTEM ?
   - WHAT MAKES IT WORTH $250M --- OR $500M ?
   - WHY CSCs ? ELEGANCE ??
     (REMEMBER BOLTZMAN)

2. • WHY LKr ? WHY NOT BaF_2 ?
   - WHY SO MANY TECHNOLOGIES ? ELEGANCE ??
   - WHY ARE THOSE SEGMENTATIONS CHOSEN ?

3. • WHY IS THE TRACKER RADIUS 95 CM ?
   - WHAT DOES IT DO ?
     γ/e SEPARATION ?
     γ, e VERTEX ?
     b-TAG ?

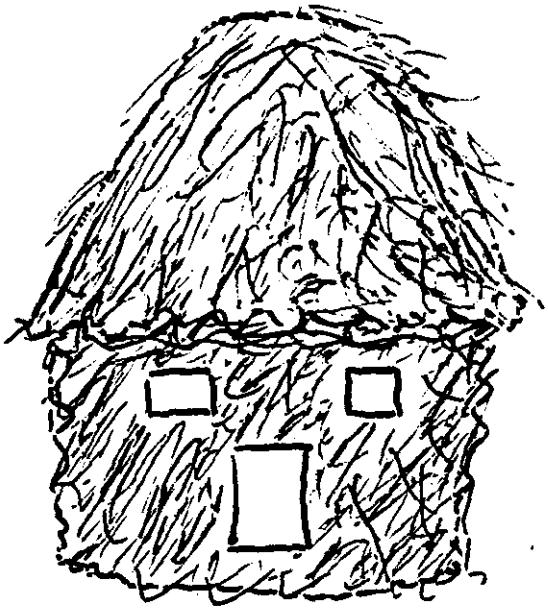

OR

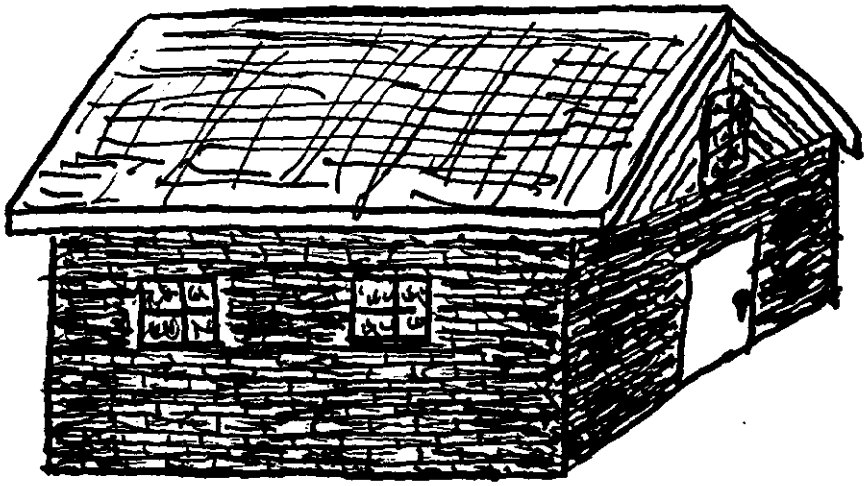

?

gem

γeμ

Presentation by:

R. Stroynowski

MAGNET SECTION

Richard Stroynowski

3.1 Overview 1
- 3.1.1 Introduction 1
- 3.1.2 General requirements for the GEM magnet 3
- 3.1.3 Trade-off, risk, and optimization studies 4
- 3.1.4 Magnet description and rationale 7
- 3.1.5 Forward field shapers 8

3.2 Magnetic field 8
- 3.2.1 Field requirements 8
- 3.2.2 Field measurements 10

3.3 Magnet design 11
- 3.3.1 General approach 11
- 3.3.2 Coil design 12
- 3.3.3 Conductor and coil joints 23
- 3.3.4 Magnet system interfaces 30
- 3.3.5 Forward field shapers 31

3.4 Fabrication, assembly and installation 33
- 3.4.1 Introduction 33
- 3.4.2 Work to date 33
- 3.4.3 Conductor and coil joints 33
- 3.4.4 Coil winding 35
- 3.4.5 Magnet assembly and installation. 36

3.5 Supporting systems 40
- 3.5.1 Introduction 40
- 3.5.2 Liquid helium supply system 40
- 3.5.3 Liquid nitrogen system 42
- 3.5.4 Power supply and protection systems 43

3.6 Fringe field 45
- 3.6.1 Introduction 45
- 3.6.2 Field in the experimental hall and electronic rack room 46
- 3.6.3 Field at the surface 47
- 3.6.4 Interface with accelerator 47

3.7 Magnet operation 48
- 3.7.1 Introduction 48
- 3.7.2 Requirements 48
- 3.7.3 Normal operations 49
- 3.7.4 Off-normal operations 49
- 3.7.5 Reliability, availability, and maintainability analysis 51

3.8 Organizational aspects 51

3.1 OVERVIEW

3.1.1 Introduction

The approach taken by GEM toward the exploration of SSC physics emphasizes photons, electrons, and muons. Precise measurements of muon momentum and electron and photon energy and position are required. To support GEM physics goals, the magnet has to provide a magnetic field which together with the technologies chosen for other detector components will allow for:

PHYSICS REQUIREMENTS

- Muon momentum resolution in the central barrel: $\delta p/p = 5\%$ for tracks with $p_t = 500$ GeV/c at $\eta < 1.35$.
- Muon momentum resolution in the forward region: $\delta p/p < 13\%$ for tracks with $p_t = 500$ GeV/c at $1.35 < \eta < 2.5$.
- Momentum resolution in the central tracker: $\delta p/p^2 = 1.15\ 10^{-3}\ (\mathrm{GeV/c})^{-1}$
- Charge separation in the central tracker at the 95% CL for tracks with momentum below 600 GeV/c.

The simplest approach to these objectives is to enclose the entire detector in a moderate magnetic field, less than one Tesla. Since the momentum resolving power varies as BL^2, maximizing the tracking volume of the muon system in a magnetic field is clearly advantageous. Higher magnetic fields limit technology options for other detector components in a smaller magnet would degrade the muon momentum resolution. A high-field, small-radius magnet version of GEM was investigated and discarded because of these considerations.

A large superconducting solenoidal coil, about 31 m long with an 18 m diameter inner bore and a field of 0.8 Tesla was selected for the GEM magnet. The scale of the magnet and the choice of its superconducting technology were set by engineering and cost constraints, including practical size limits for the detector hall and mechanical constraints in magnet construction, installation, and maintenance. Several alternative magnet concepts considered in the early design stages are listed in Table 3-1.

Table 3-1. Major magnet design options

Option	Comments	Major disadvantages
resistive coil with iron flux return	low technical risk	high construction cost, high operating cost

CONCEPT

- DRIVEN BY MOMENTUM RESOLUTION (PHYSICS) REQUIREMENTS
- HIGH FIELD, SMALL RADIUS OPTION STUDIED AND DISCARDED

OPTIMIZATION STUDIES

1. RADIUS, LENGTH AND FIELD

   OPTIMIZED WITH COMBINED MAGNET + MUON SYSTEM MODEL KEEPING RESOLUTION REQUIREMENTS FIXED

2. SMALL ANGLE RESOLUTION

   MANY OPTIONS STUDIED, FFS SELECTED AS CHEAPEST, LEAST RISKY AND SUFFICIENT

3. ABSENCE OF FLUX RETURN

   JUSTIFIED BY COST, SCHEDULE AND SMALL COST OF LOCAL SHIELDING

4. CHOICE OF CONDUCTOR CONFIGURATION

   JUSTIFIED BY SAFETY MARGIN AND POSSIBILITY OF PRE-TESTING

Table 3-2 Major parameter list for the GEM magnet.

Central induction	0.8 T
Mean radius of windings	9.5 m
Inner radius of the cryostat	9.0 m
Overall outer radius, including structural ribs	10.9 m
Coil length. (per half)	14.44 m
Number of turns (per half)	228
Central gap between cryostats	1.5 m
Magnet axis height above floor level	13.0 m
Total magnet assembly weight (per half)	1300 t
Forward Field Shaper minimum z	10.0 m
Forward Field Shaper maximum z	18.0 m
Forward Field Shaper included angle	17.4 deg
Forward Field Shaper mass (each)	1265 t
Operating current	50.2 kA
Stored energy	2.5 GJ
Inductance	1.98 H

Fig. 3-1

GEM DETECTOR MAGNET SYSTEM

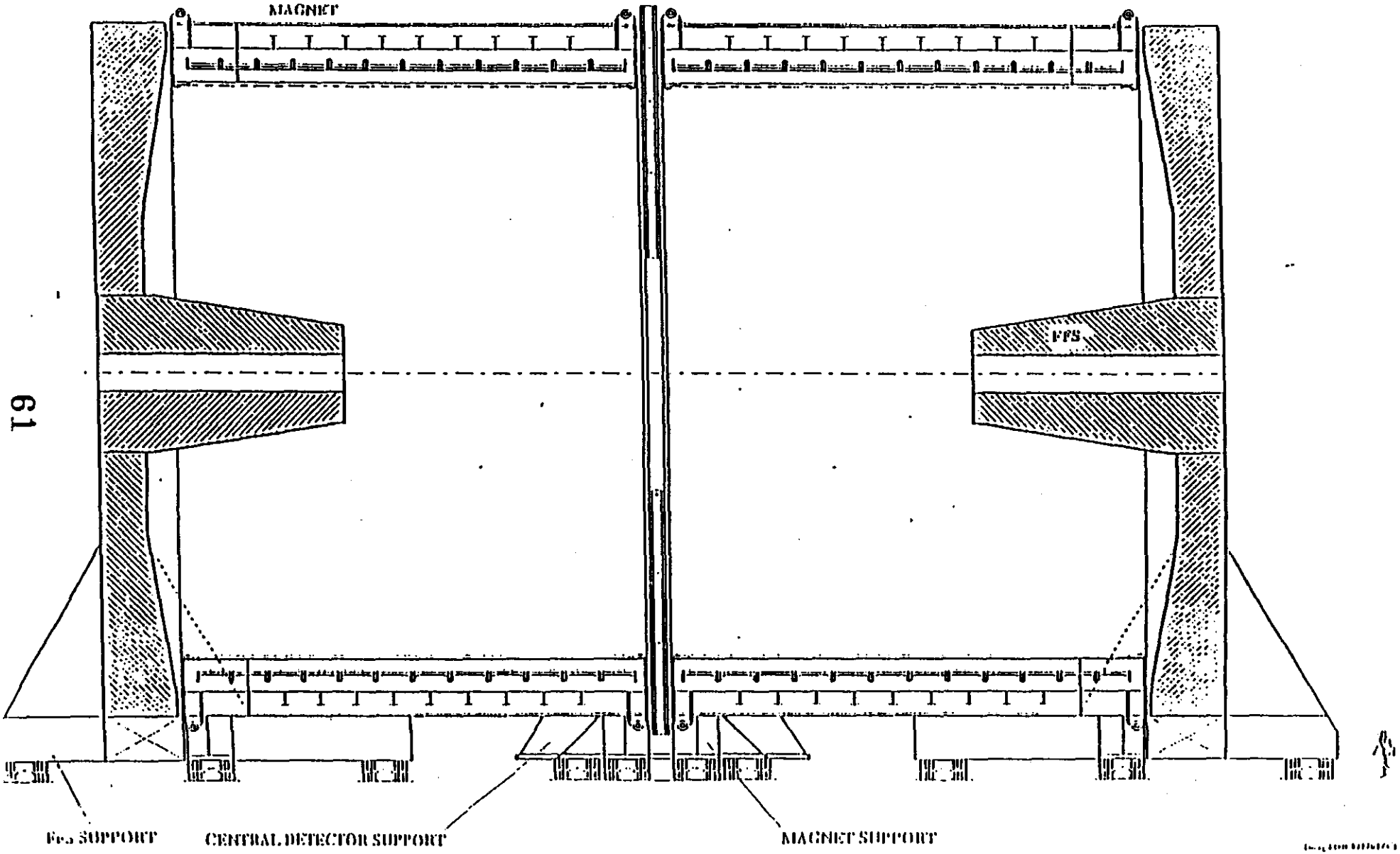

FIELD IN THE CENTRAL TRACKER

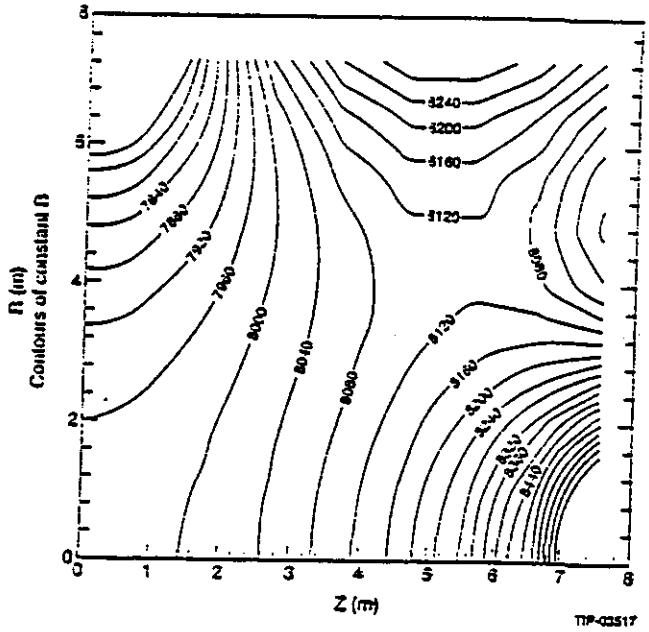

Figure 3.5 Contours of constant B for the central tracker labeled in gauss: the contours are increments of 40 G apart.

3.5

NO RESOLUTION PLOTS

MAGNET DESIGN - 20 PAGES

- 10 FIGURES
- 4 TABLES

FABRICATION AND ASSEMBLY - 7 PAGES

- MANUFACTURE AND TESTS OF CONDUCTOR AND JOINTS
- COIL WINDING
- ASSEMBLY AND INSTALLATION (to be correlated with Installation chapter)

SUPPORTING SYSTEMS - 4 PAGES

- LIQUID Helium
- LIQUID Nitrogen
- Power Supply and Protection

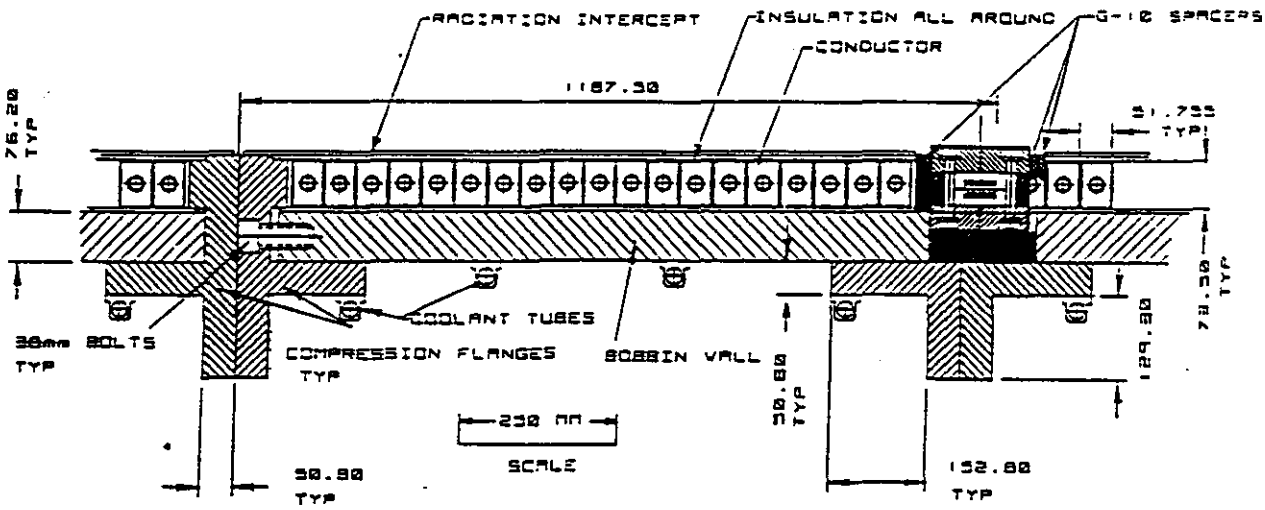

Fig 3-6 Coil Model Cross Section

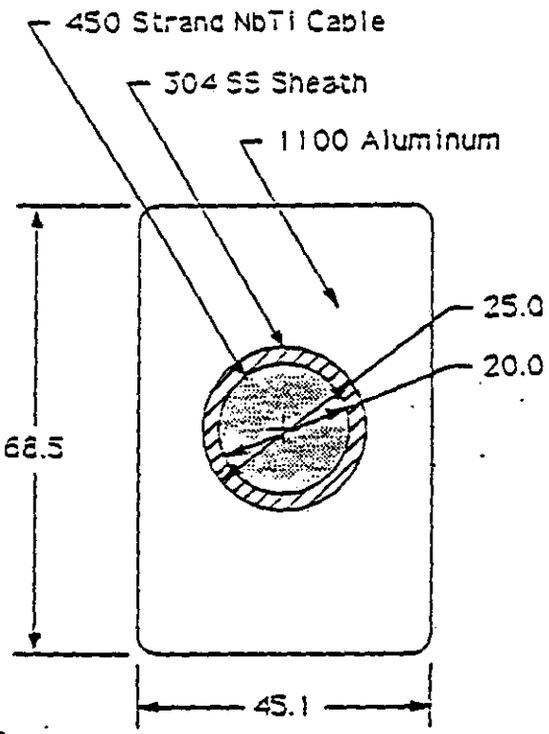

Fig. 3-7

GEM Magnet Conductor

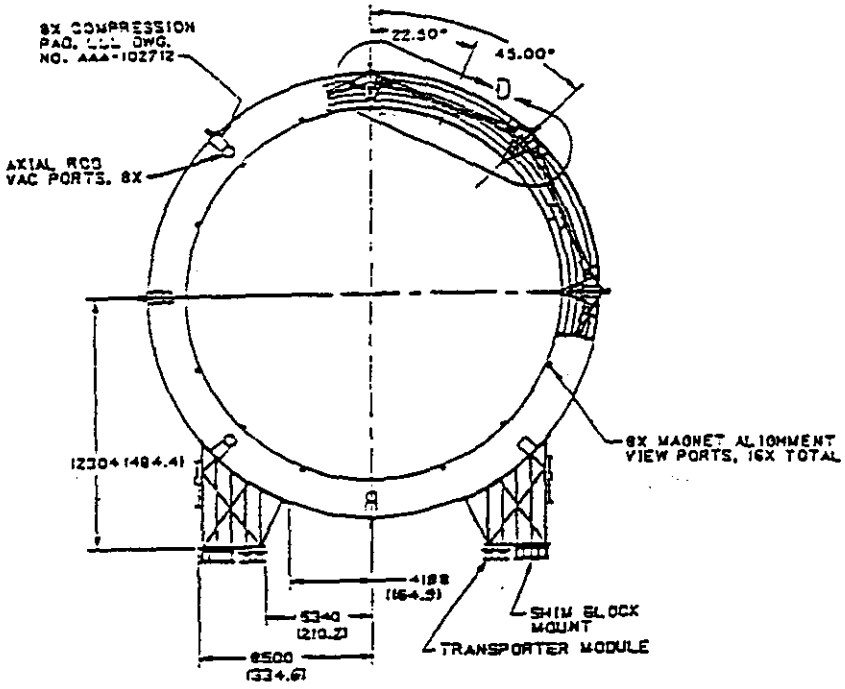

Figure Vacuum Vessel End-View

3-10 a)

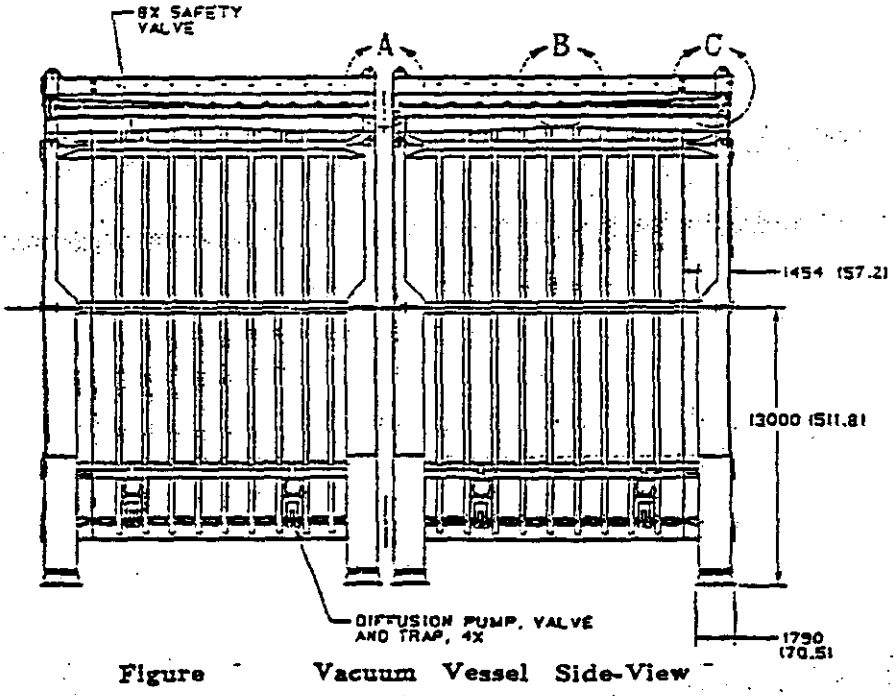

Figure Vacuum Vessel Side-View

3-10 b

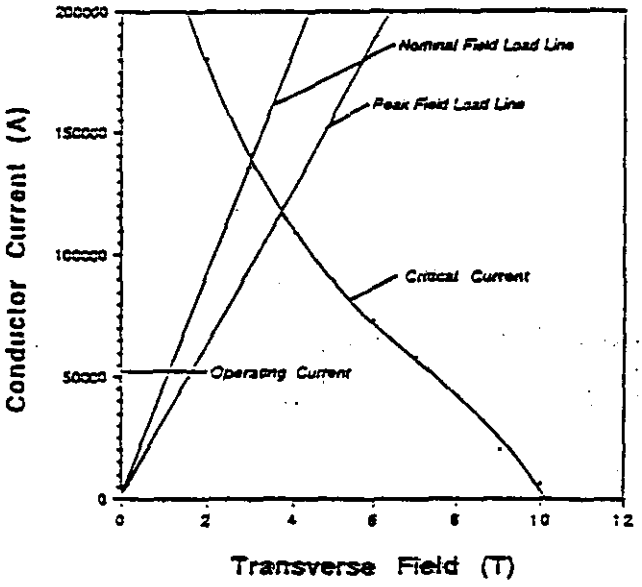

Conductor critical current versus magnetic field and operating point.

Fig. 3-13

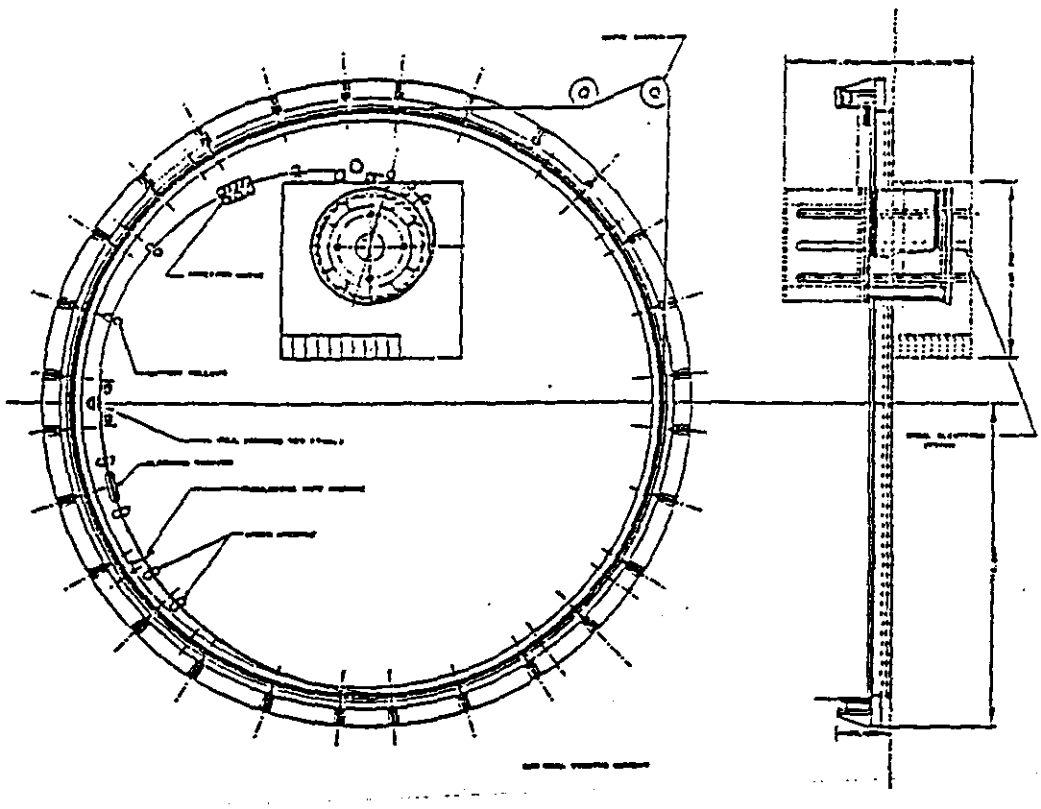

Winding Assembly

Fig. 3-17

Fig. 3-18

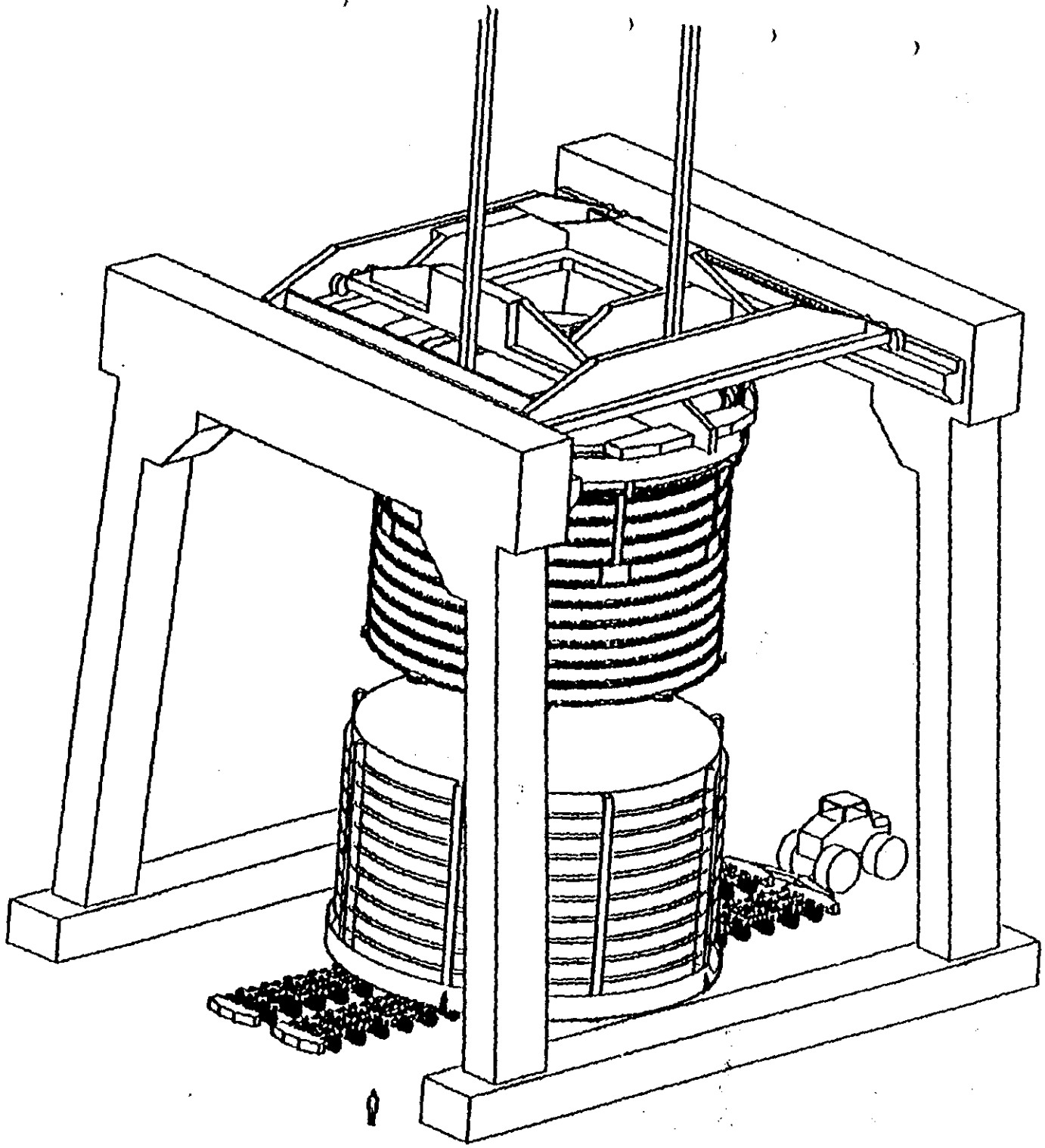

NAME: JACKING_CRAN

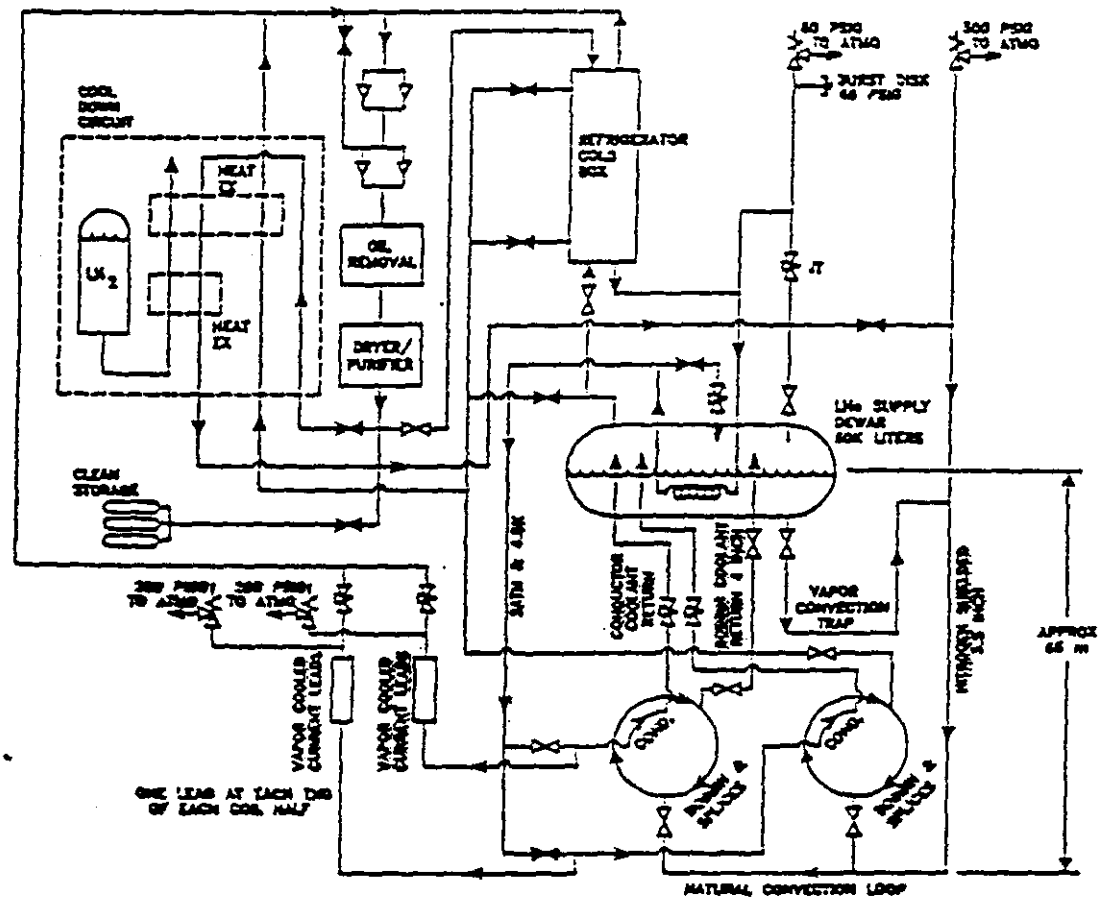

GEM Magnet, Helium Flow Schematic

Fig. 3-20

PROBLEMS

- DETECTOR CHANGES :

  FFS CHANGED ON 3/15

  → ENGINEERING NOT DONE

  → FIELD CALCULATIONS AND FIGURES

  → FORCES ON ~~B~~ POWER-UP

  → FORCES ON WINDING

HOPEFULLY - CHANGES ARE SMALL

- INSTALLATION CHANGES

  TOP LEVEL SCHEDULE HAS NOW FFS INSTALLED

  AFTER CALORIMETRY AND BARREL MUONS

  → SINCE FIELD CHANGES AFTER FFS INSTALLATION WE MUST RELY NOT ON MAPPING BUT ON MEASURING FIELD ON DETECTOR BOUNDARIES AND CALCULATING FIELD INSIDE. THE PRINCIPLE IS KNOWN BUT STRATEGY IS NOT DEVELOPED.

- CENTRAL DETECTOR SUPPORT
  - USED TO BE PART OF THE MAGNET
  - BECAME PART OF CALORIMETRY
  - SHOULD NOT GET LOST !

- RATIONALE FOR MOVABLE MAGNET
  - MENTIONED ONLY
  - FULL JUSTIFICATION FROM INSTALATION/INTEGRATION ?

gem

γeμ

Presentation by:

H. Gordon

H. Gordon
3/18/93

Calorimetry - Chapter 5

STATUS — Few figures missing, some need modification
Text - needs to be made more coherent — put into one voice
Next draft available 3/19/93

Principal issues unresolved — NONE (Forward EM?)
(for TDR!)

Interdependencies — Installation + safety → totally in their own chapter
Fig 5-1 - duplicated in Chapt 1?

Physics goals — Measure and idenify
γ, e, μ, ν, jets
Priority ⟶

Table 5-1

$H \to \gamma\gamma$

	GEM	SDC (baseline)		
$\frac{\Delta M}{M}$	0.65	1.23	GeV	$\Delta E/E$
Segmentation	0.026	.05		
γ Pointing	40-50 mrad/$\sqrt{E}$	?		STRIPS
Multiphotons/ jet rejection	~5	?		STRIPS

	GEM	SDC
SPEED (em)	5 GeV × ns/E (5×5 Tower)	?

Problem

- JET resolution – anywhere, [redacted] near dead material

  goal not really verified

  More detailed simulation needed

  Arizona, Mississippi, ORNL, Rochester, SSCL

  weighting schemes ??

  massless gaps – useful, needed?

  CALOR 89, GEANT, ??

  Cu vs Pb in barrel Kr ??

- n, γ effects — γ, n + ^{82}Kr —

  H. Ma – no problem

H. Gordon – Text

H. Takai – Figures

March 17, 1993

Calorimeter Section Outline for the GEM TDR

			# of Pages	
5.0	Calorimetry			
	5.1	Introduction	3	W. Willis
	5.2	Physics Requirements and Expected Performance	8	J. Womersley
		5.2.1 Higgs Search- electrons and photons	2	
		5.2.2 Jet Resolution	2	
		5.2.3 Muons	2	
		5.2.4 Calorimeter Specifications	1	
	5.3	R&D Results: motivating main technology choice		
		GEM		H. Takai
		RD3, D0, H1, SLD		R. Schindler
	5.4	Calorimeter Design		
		5.4.1 Inner Barrel Calorimetry		
		Electromagnetic	8	M. Seman
		Hadronic		F. Lobkowicz/P. Slattery
		Cryostat		L. Mason
		5.4.2 Endcap Calorimetry	10	
		Electromagnetic		M. Seman
		Hadronic		P. Mockett
		Forward System		J. Rutherfoord/R. Webb
		Cryostat		L. Mason
		5.4.3 Scintillating Barrel Calorimetry	5	Y. Kamyshkov/ L. Sulak
		5.4.4 Passive Absorber	1	M. Rennich
		5.4.5 Cryogenics Subsystem	3	D. Richied/W. Wisniewski
		Liquid Krypton System Purification/Recirculation		
		Liquid Argon System		
		Liquid Nitrogen System		
		5.4.6 Vacuum Subsystem	2	J. Chapman/W. Wisniewski
		5.4.7 Instrumentation, Power, & Operations	2	C. Eberle/W. Wisniewski
	5.5	Electrodes, Charge Amplification, and Calibration		
		5.5.1 Ionization Calorimeter Readout Chain	3	S. Rescia/ J. Parsons
		Signal Electrode		
		High Voltage Electrode		
		Preampliers		
		5.5.2 Ionization Calorimeter Calibration System	2	S. Rescia
		Calibration Circuit		
		Calibration Clock Fan-out and Driver		
		Current Source and Fan-out		
		5.5.3 Ionization Calorimeter Noise Considerations	3	S. Rescia/W. Cleland
		Thermal Noise		
		Pileup Noise		
		Choice of Hardware Shaping Time		
		5.5.4 Phototube Readout and Calibration System	2	N. Akchurin/E. Hazen/ J. Parsons

no physics results

		Phototube Readout System Calibration System Trigger		
	5.5.5	Absolute Calibration of the Calorimeter Z's, gamma + jets, etc.	2	J. Womersley
	5.5.6	Feedthroughs, Cables and Interconnections	2	S. Rescia/D. Makowiecki
5.6		Radiation Hardness	2	
	5.6.1	Electronics		S. Rescia
	5.6.2	Materials		J. Rutherfoord
5.7		Calorimeter Assembly	5	L. Mason/M. Rennich
5.8		Research and Development: Plans for FNAL and SSCL	10	P. Slattery
5.9		Engineering Plans	3	L. Mason/M. Rennich
5.10		Production Plans	4	D. Lissauer/L. Mason/ M. Rennich
	5.12.1	Potential Locations		
	5.12.2	Fabrication Techniques		
	5.12.3	Industrial Participation		
	5.12.4	Quality Control		
5.11		Cost, Schedule and Responsibilities	5	D. Lissauer/L. Mason/ M. Rennich
Total			100	

Maintence?

Table 5-1. GEM Calorimeter Parameters

EM energy resolution		
Barrel	$6\% / \sqrt{E} \oplus 0.4\%$	
Endcap	$7.5\% / \sqrt{E} \oplus 0.4\%$	
EM position resolution	$4.4\ \text{mm} / \sqrt{E}$	
EM pointing resolution (barrel)	$40\ \text{mrad}/\sqrt{E}$	
(endcap)	$52\ \text{mrad}/\sqrt{E}$	
EM coverage	$\eta<3.0 \longrightarrow$	
EM dynamic range	10^5 (up to ~10 TeV)	
Time resolution		
EM(5×5 Towers)	5 GeV×ns/E	
E_{jet}(0.32×0.32)	80 GeV×ns/E	
Speed/shaping time		
EM	40 ns (20 ns for $\eta>1.83$)	
HAD (Liquid)	100-200 ns	
Scintillating Barrel Calorimeter	5 ns	
Forward Liquid	16 ns	
Forward Hadronic	16 ns	
Noise (at $L=10^{33}\ cm^{-2}\ s^{-1}$)	Thermal $\longrightarrow$	Pileup
EM	20 MeV/tower (0.026×0.026)	13 Mev
HAD 1st Hadronic (1λ)	77 MeV (0.08×0.08)	77 MeV
2nd (3rd) Hadronic (3.5λ)	104(80) MeV	60 MeV
Scintillating Barrel Calorimeter	0.1-0.2 MIPS	
Hadron Coverage	$0 < \eta < 5.5$	
Hadron energy resolution (Jets)	$60\ \% / \sqrt{E} \oplus 4\%$	
Hadron dynamic range	10^5 (up to ~ 5 TeV)	
Number of absorption lengths (λ)		
at $\eta = 0$	~11	
at $\eta = 3.0$	12 active, >16 total	
Barrel Dimensions		
inner radius	0.95 m	
outer radius	3.70 m	
Lateral segmentation		
EM	0.026 × 0.026	
HAD	0.08 × 0.08	
Longitudinal segmentation	3 EM + 3 HAD (in liquid)barrel 3 EM + 4 Had Endcap 1 Layer in Scintillator	

Lead Liquid EM Calorimeter - Kr in Barrel/Argon in Endcap

Absorber material (barrel)	0.2 mm SS/0.08 mm prepreg/1 mm Pb 0.08 mm prepreg/0.2 mm SS

(endcap)	0.15 mm SS/0.08 mm prepreg/1.4 mm Pb 0.08 mm prepreg/0.15 SS
Readout Board	0.4mm (Kapton/Cu)
Active liquid thickness	2 x 2 mm
Lateral segmentation (η, ϕ)	0.026×0.026 →
Longitudinal segmentation (barrel)	3 (3 X_0, 10 X_0, 11 X_0)
(endcap)	3 (4 X_0, 10 X_0, 13 X_0)
Inner Radius (cryostat/accordion)	950/1083 mm
Outer Radius (accordion)	1605 mm
Radiation Lengths	24 X_0 at $\eta = 0$; 27 X_0 at $\eta = 3$
Absorption Lengths	$1.3\,\lambda$ @ η=0 →
Number of Channels-Total	60,480 Barrel 24,216 /Endcap 108,912 Total
Readout Device	JFET preamplifier (75 mW / channel)
Weight of Barrel	64 Mg
Weight of Each End Cap	18 Mg

Liquid Krypton/Lead (Argon/Copper) Hadron Calorimeter

Lateral segmentation (η, ϕ)	0.08×0.08 →
Longitudinal segmentation	3-Barrel 4-Endcap
Dimensions	
Inner Radius (active)	1,710 mm
Outer Radius (active)	2,649 mm
Length (including passive absorber)	11,440 mm
Absorber Thickness (Pb in Barrel)	9 mm
(Cu in Endcap)	27 mm
Passive material (η=0) (tracker, CH_2)	1.2 X_0
Active liquid thickness (Kr in barrel, Ar in endcap)	2 mm
Readout Channels - total hadron	~20,000
Assemblies (including EM and vessel)	3 each
Barrel Weight	408 Mg
End Cap Weight (each)	433 Mg
Forward (each)	2 Mg
Total	1,274 Mg
Liquid Volume	
Barrel (krypton)	24,134 liters
End cap (each) (argon)	19,240 liters
Reserve in head vessel	3×1,200 liters
Reserve	3×2,000 liters
Total (krypton/argon)	27,334/44,880 liters

Barrel Scintillating Calorimeter

Lateral $\eta \times \phi$ readout segmentation	0.16×0.16 →
Longitudinal segmentation	1
Dimensions	
Inner Radius	2923 mm

Outer Radius	3800 mm
Length	2 × 5640 mm
Sense Material: Scintillator/WLS (by volume)	4.5 %
Absorber: Copper	91 %
Weight	1372 Mg
Readout -Photomultipliers	640

Forward Calorimeter

Forward EM Liquid Argon Calorimeter

Lateral segmentation	0.2 × 0.2 →
Absorber	Cu
Distance from IP to near face	4,476 mm
Total Weight (each)	3 Mg →
Channels (each side)	400 →
Active Absorption Length	2.6 λ
Dimensions	
Inner Radius	85 mm
Outer Radius	310 mm
Depth in z	402 mm

Forward Scintillating Calorimeter

Lateral segmentation	0.2×0.2 →
Absorber	W
Energy resolution (hadrons)	70 % /$\sqrt{E}$ ⊕ 6% →
Distance from IP to near face	5,089 mm
Total Weight (each)	47 Mg →
Channels (each side)	200 →
Active Absorption Length	11.4 λ
Dimensions	
Inner Radius	45 mm
Outer Radius	628 mm
Depth in Z	1000 mm
Integration Time	20 ns

Total Weigh of Calorimeter System

Liquid - Barrel + Endcaps	1,223 Mg
Passive Absorber (Cu) + forward	240 Mg
Barrel Scintillating Calorimeter	1,372 Mg
Total	2,835 Mg →

M- missing F - final - 29/48

N- new figure expected E- electronic version missing

Figures for Chapter 5 - Calorimetry (as of March 17, 1993)

5-1. Overall layout of GEM Calorimeter showing Inner Barrel, Outer Scintillating and Endcap. Martin Marietta - K. Barnstable .rtf (could be IGES) N

5-2. σ/E vs. $1/\sqrt{E}$ for GEM EM accordion. Misha Leltchouk (Columbia) .ps F

5-3. π^0 rejection vs. π^0 momentum. for EM accordion Hong Ma (BNL) .ps N

5-4. Angular resolution of EM accordion. Hong Ma.(BNL) .ps F

5-5.. Energy in liquid krypton calorimeter vs. beam energy. Helio Takai (BNL)- .ps F

5-6. Energy resolution vs. $1/\sqrt{E}$ for liquid krypton beam test. Helio Takai (BNL) .ps F

5-7. Timing resolution of liquid krypton module. Helio Takai (BNL) .ps F

5-8. Accordion electrode structure. Martin Marietta. B. Easom .rtf (Could be .iges) N

5.9. Accordion bends defining β/δ. Michal Seman(Columbia)??? N

5-10. Transverse and longitudinal segmentation of the Inner Barrel EM. Bo Yu (BNL)- .eps F

5-11. Inner Barrel EM accordion showing how the strips are connected with jumper strips. Bo Yu (BNL) .eps. F

5-12.. Inner Barrel EM accordion signal electrode. Don Makowiecki(BNL) .eps F

5.12a Isometric view of EM module showing bands that hold the assembly in tension, the motherboards and cables. B. Easom (Martin Marietta) .iges N

5-13.. Inner Barrel Hadronic modules - end view. Fred Lobkowicz (Rochester) .tif N

5-13a. Isometric view of barrel hadronic module. Fred Lobkowicz (Rochester) .tif N

5-14. Unit cell in Inner Barrel Hadronic module showing electrostatic transformer. Fred Lobkowicz (Rochester) .tif N

5-15. Typical layer of Inner Barrel hadronic module showing tiles. Fred Lobkowicz (Rochester) .tif N

5-16. Top view of Endcap EM calorimeter. Michal Seman (Columbia) .ps F

5-17. η and ϕ segmentation in EM endcap. Michal Seman (Columbia) .ps F

5-18. Electrode and absorber arrangement in the endcap hadron modules. Paul Mockett(Washington) ??? N

5-19. Outer Endcap Hadronic module. Paul Mockett(Washington) ??? N

5-20. Exploded view of a tube electrode. The inner rod is held at high voltage while the outer rod is at ground. Liquid argon fills the gap between the rod and tube and a spiraled quartz fiber supports the rod within the tube, maintaining the gap. J. Rutherfoord(Arizona) ??? E

5-21. Close-up of the front face of the EM section of the forward calorimeter in the region of the beam tube. J. Rutherfoord(Arizona) ??? E

5-22. Front face of the EM section of the forward calorimeter showing the readout segmentation. The scale on the left gives the scale in mm while on the right the η coverage can be determined. J. Rutherfoord(Arizona) ??? E

5-23. A slice along the beam line of the hadronic forward calorimeter section. Y. Kamyshkov (ORNL) .eps F?

5-24. Details of the capillaries which hold the liquid scintillator in the hadronic section of the forward calorimeter. Y. Kamyshkov (ORNL) .eps F?

5-25. Assembly of scintillating barrel calorimeter. Y. Kamyshkov (ORNL) .eps F?

5-26. End view of scintillating barrel calorimeter. Y. Kamyshkov (ORNL) .eps F?

5-27. Details of scintillating barrel calorimeter module - end view. Y. Kamyshkov (ORNL) .eps F?

5-28. Detail of tile/fiber arrangement in the readout tower. Y. Kamyshkov (ORNL) .eps F?

5-29. Details of scintillating barrel calorimeter module - side view. Y. Kamyshkov (ORNL) .eps F?

5-30. Relative light yield (LTRANS MC simulation) vs. tile thickness. Y. Kamyshkov (ORNL) .eps F?

5-31. Relative light yield (LTRANS MC simulation) vs. number of readout WLS fibers per tile. Y. Kamyshkov (ORNL) .eps F?

5-32. Relative light yield (LTRANS MC simulation) vs. transverse MIP track position. Y. Kamyshkov (ORNL) .eps F?

5-33. Distribution of number of photoelectrons per MIP (LTRANS MC simulation). Y. Kamyshkov (ORNL) .eps F?

5-34. Time resolution for a MIP in the scintillating barrel tower. Y. Kamyshkov (ORNL) .eps F?

5-35. Jet resolution vs. jet energy at 90° (PYTHIA + GEANT simulation) in GEM Pb/Kr longitudinally segmented barrel calorimeter + scintillating barrel calorimeter for different number of instrumented layers in scintillating barrel. Three longitudinal readout segments are assumed in the liquid hadron calorimeter section. The jet energy resolution can be parametrized as: F?

$(59.6 \pm 0.7)/\sqrt{E} \oplus (3.75 \pm 0.13)$ for 10 layers of instrumentation;

$(60.2 \pm 0.7)/\sqrt{E} \oplus (3.94 \pm 0.13)$ for 3 layers of instrumentation;

$(59.2 \pm 0.8)/\sqrt{E} \oplus (4.77 \pm 0.14)$ for no instrumentation. Y. Kamyshkov (ORNL) .eps

5-36. Mean energy deposited by jets in the scintillating barrel vs. jet initial energy. Energy deposition in scintillator is corrected for Birks effect. For comparison most probable MIP response and average recoil proton response (protons are originated by 1 MeV neutrons) in one readout tower are shown. Y. Kamyshkov (ORNL) .eps

5-37. Passive absorber - Y. Kamyshkov (ORNL) .eps F?

5-38. Cryogenics system - Don Richied(SSCL) .ps - F

5-39. Calorimeter readout chain. Sergio Rescia(BNL) .ps N

5-43a Equivalent series noise voltage before and after irradiation with a ^{60}Co source of a monolithic JFET device. Device parameters: W=11,400 μm, V_{DS}=4 V, V_{SUB}=12 V.Sergio Rescia(BNL) .ps N

5-44 Assembly of Inner Barrel Calorimeter. Martin Marietta MISSING M

5-46. Assembly of the Endcap Calorimeter. Martin Marietta MISSING M

5-47 GEM Test Beam Facility in FNAL's MWEST Hall. Paul Slattery (Rochester) .dxf F

5-48. GEM Test Beam Cryostat transporter. Paul Slattery (Rochester) .dxf F

5-49 GEM Test Beam Cryostat showing modules inside. Dave Forbush (Washington) .ps F

5-50 GEM liquid calorimetry cost model flow diagram. David Lissauer (BNL) .rtf F

Calorimeter Overview

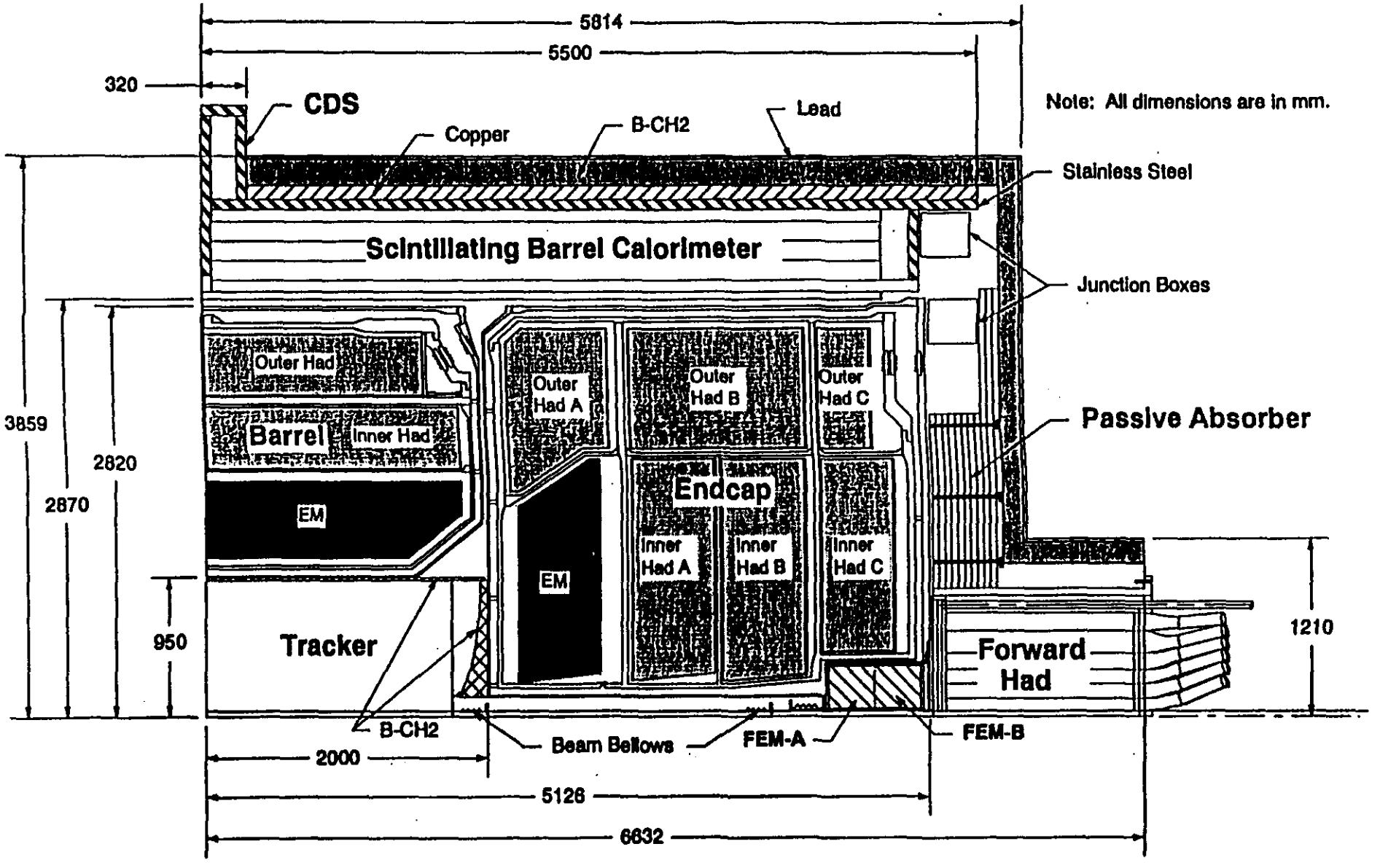

003

5-1

Barrelable: Overview:930314
3/15/93Bar9k.Cold.Cu/Warm.Cu
3/15/93Endcap9k.Cold

5-2

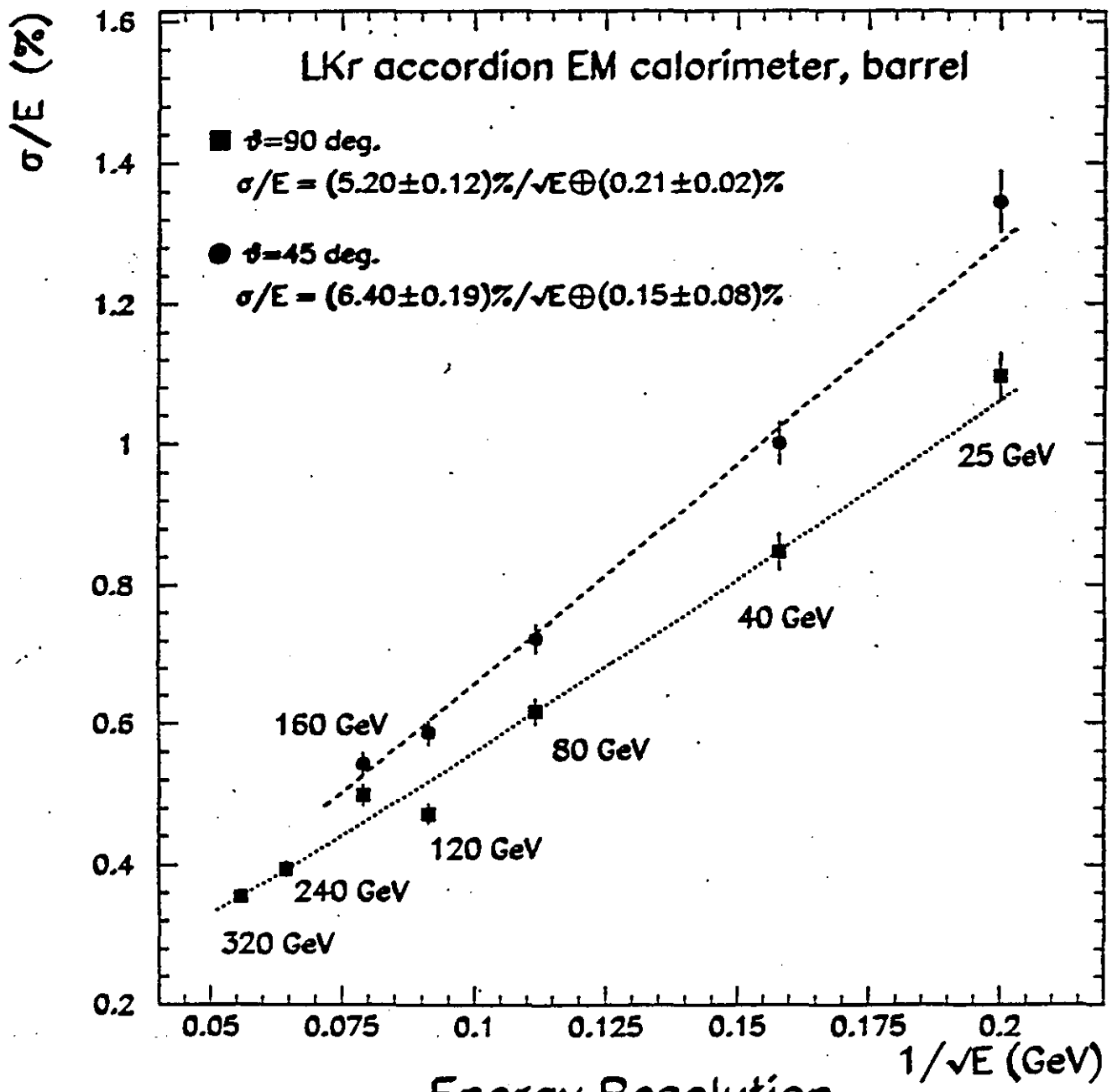

Energy Resolution

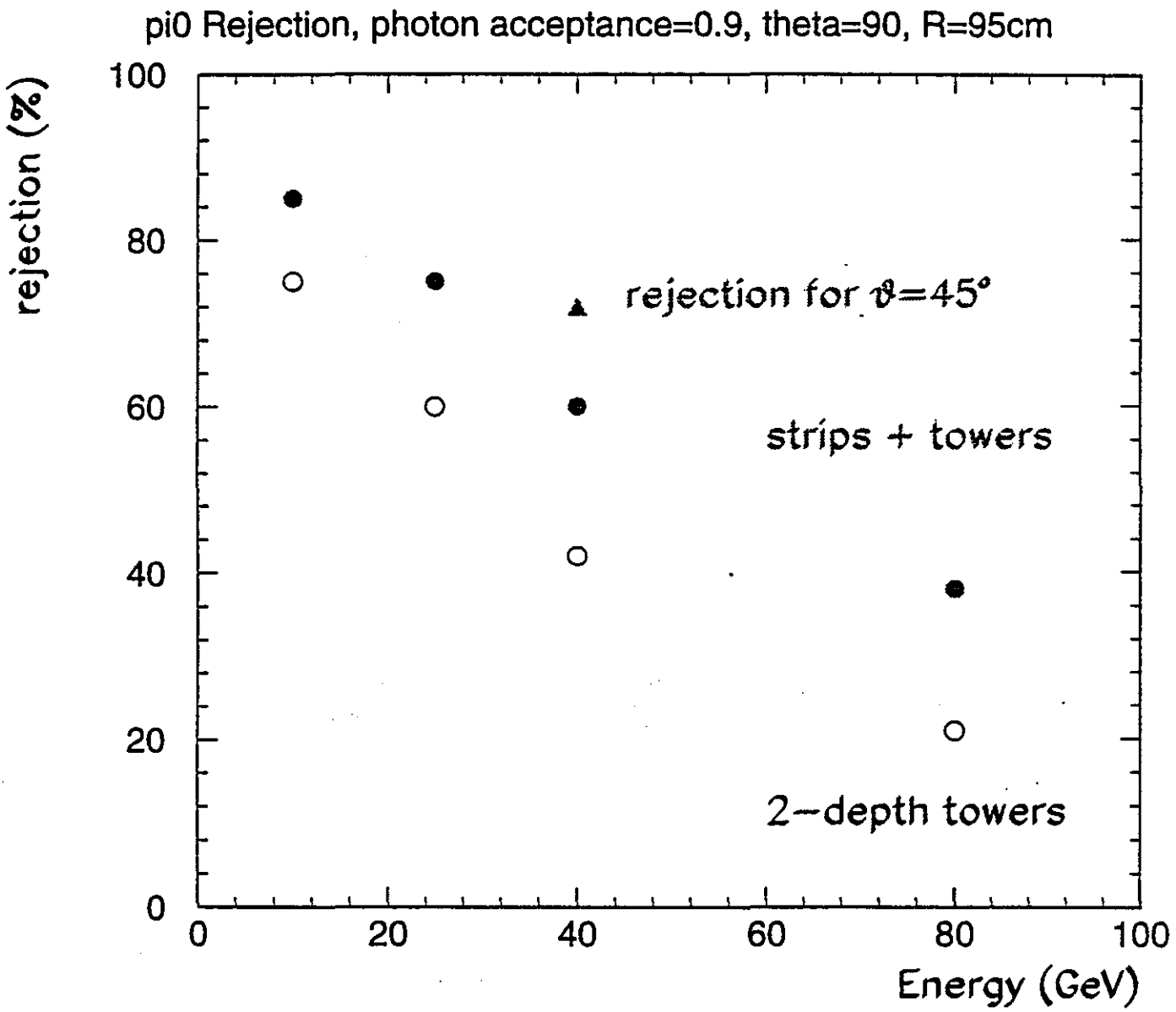
pi0 Rejection, photon acceptance=0.9, theta=90, R=95cm
rejection (%)
100
80
60
40
20
0
0
20
40
60
80
100
Energy (GeV)
rejection for ϑ=45°
strips + towers
2−depth towers

5-3

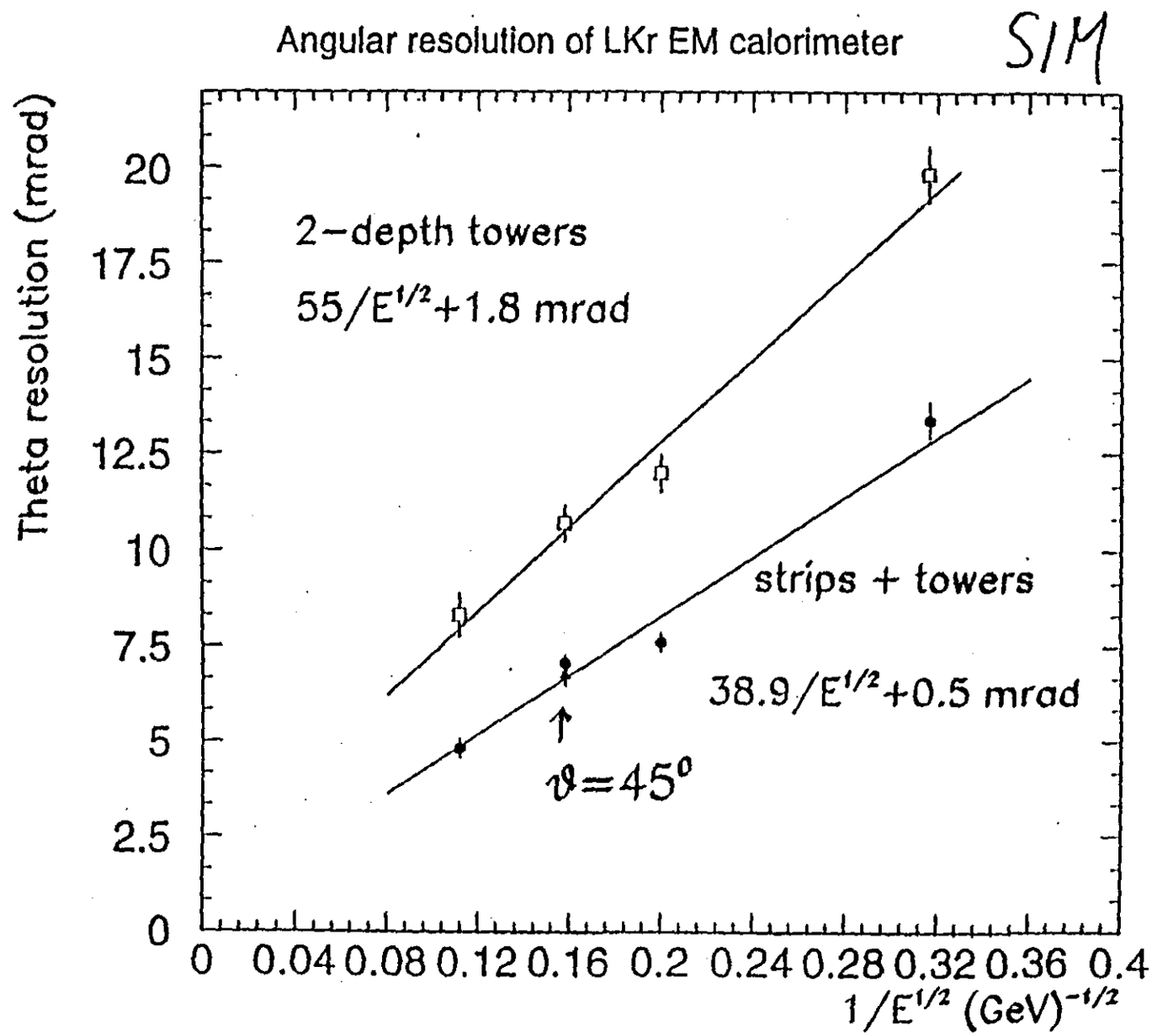
Angular resolution of LKr EM calorimeter
SIM
Theta resolution (mrad)
20
17.5
15
12.5
10
7.5
5
2.5
0
2-depth towers
55/E^1/2+1.8 mrad
strips + towers
38.9/E^1/2+0.5 mrad
ϑ=45°
0 0.04 0.08 0.12 0.16 0.2 0.24 0.28 0.32 0.36 0.4
1/E^1/2 (GeV)^-1/2

4-5

Linearity

DATA

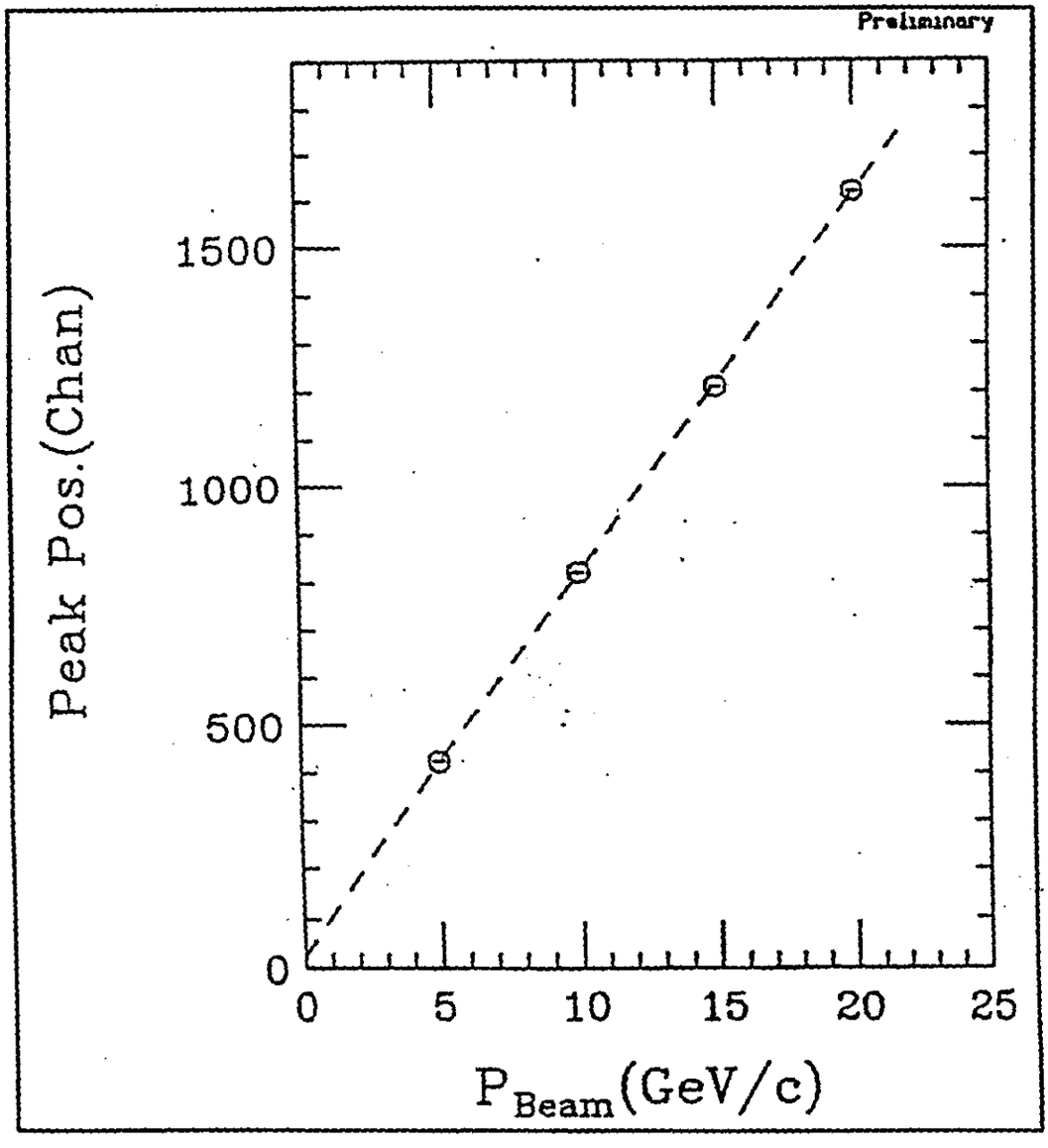

5-5

Energy Resolution

DATA

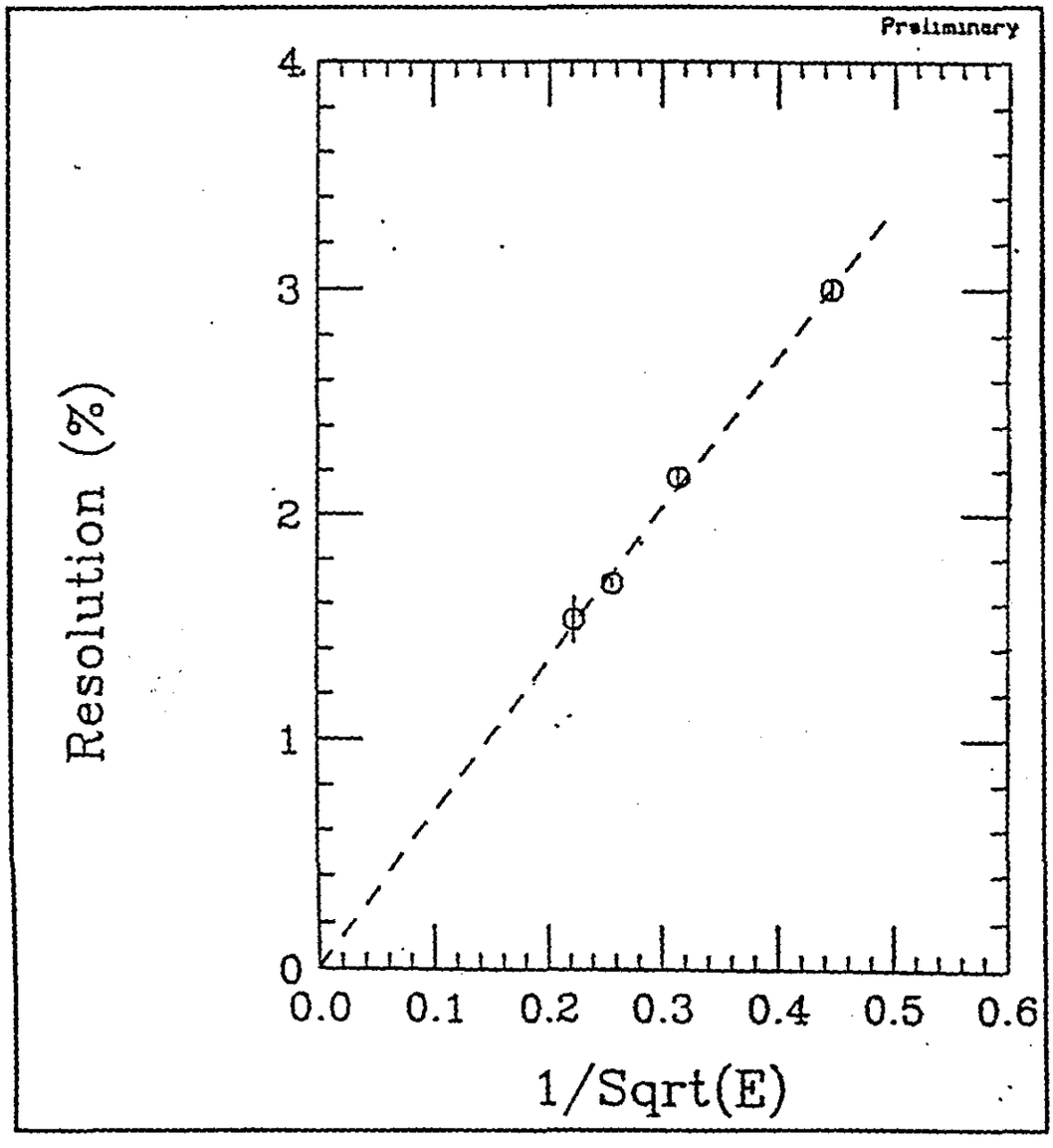

$$\frac{\Delta E}{E} = (0.0 \pm 0.2)\% \oplus \frac{(6.72 \pm 0.04)\%}{\sqrt{E}} \oplus \frac{0.080 GeV}{E}$$

5-6

LKr Timing Resolution

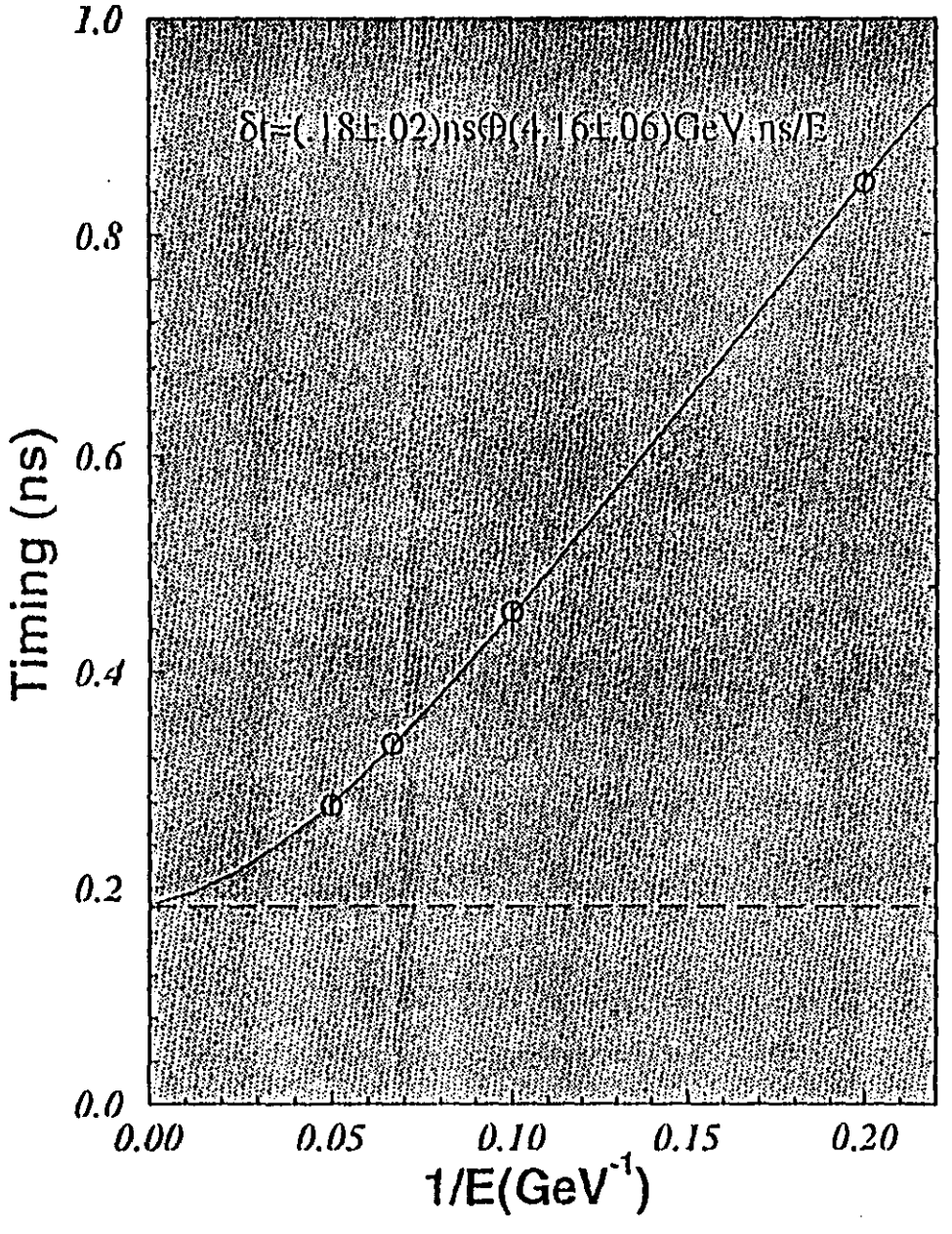

5-7

5-8

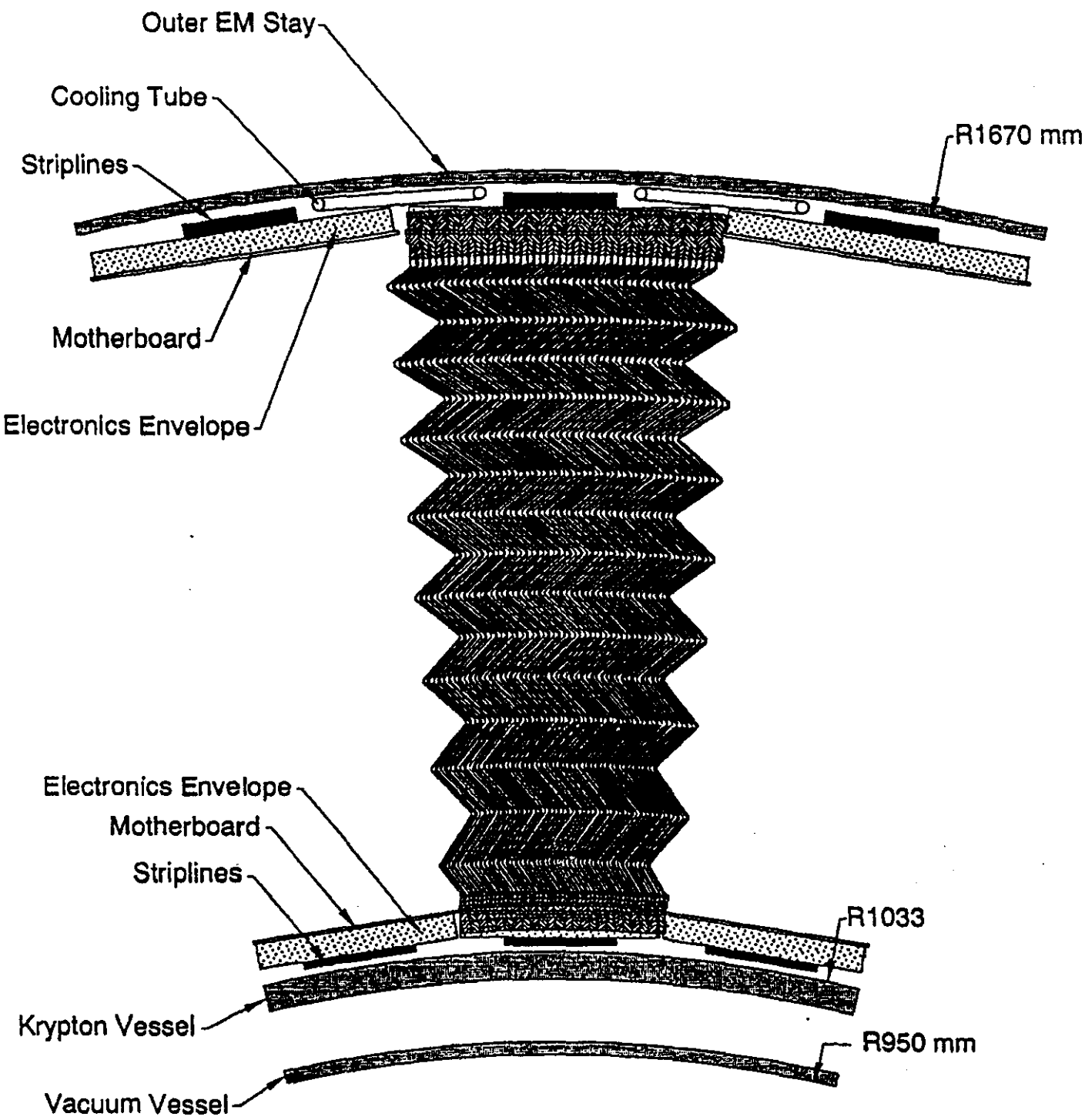

Essom 3/8/93 xs.cosd

5-9

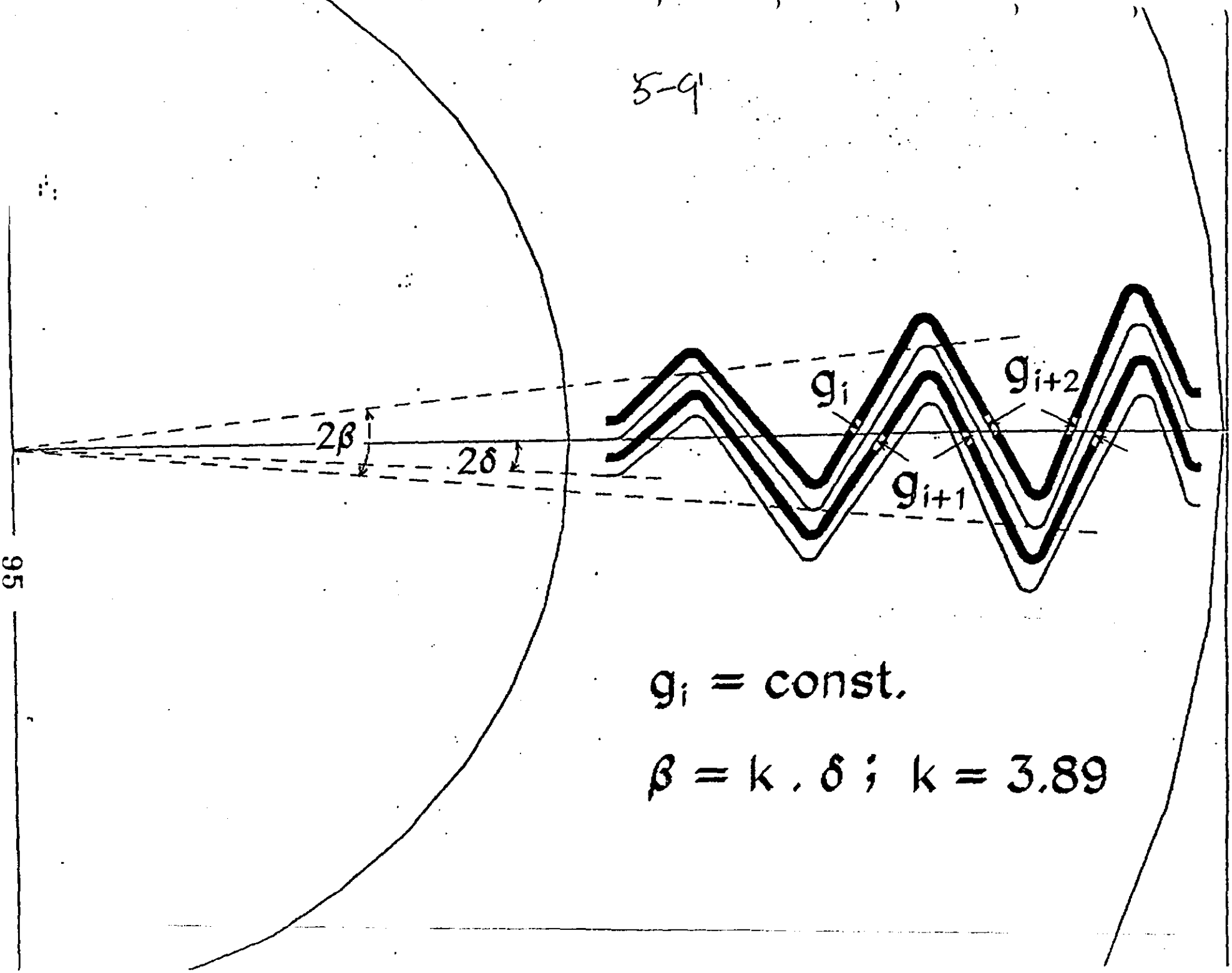

EM Accordion Segmentation

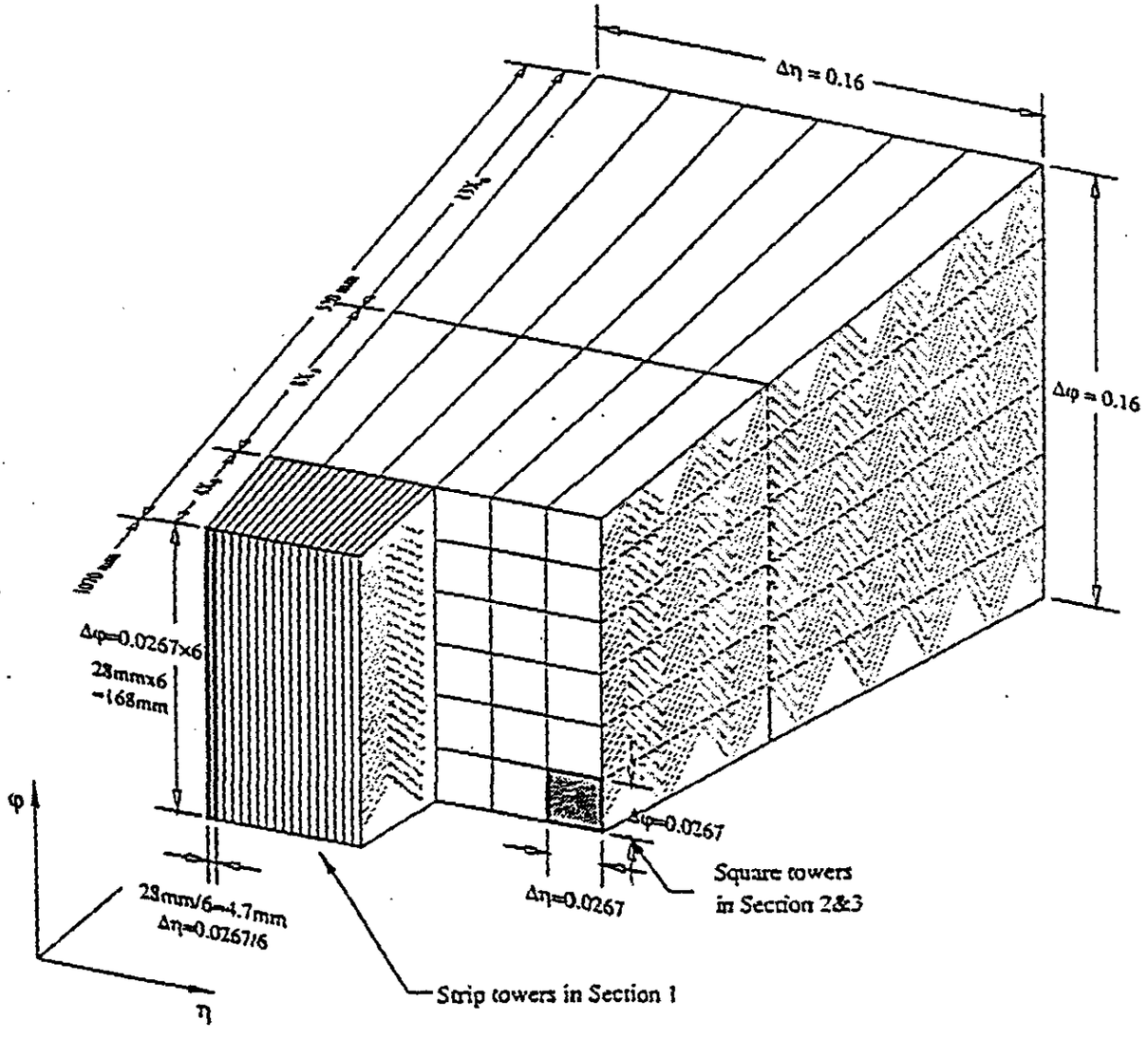

5-10

EM Accordion Electrodes
1st Section ($4X_0$), $\delta\eta$ Strips

5-11

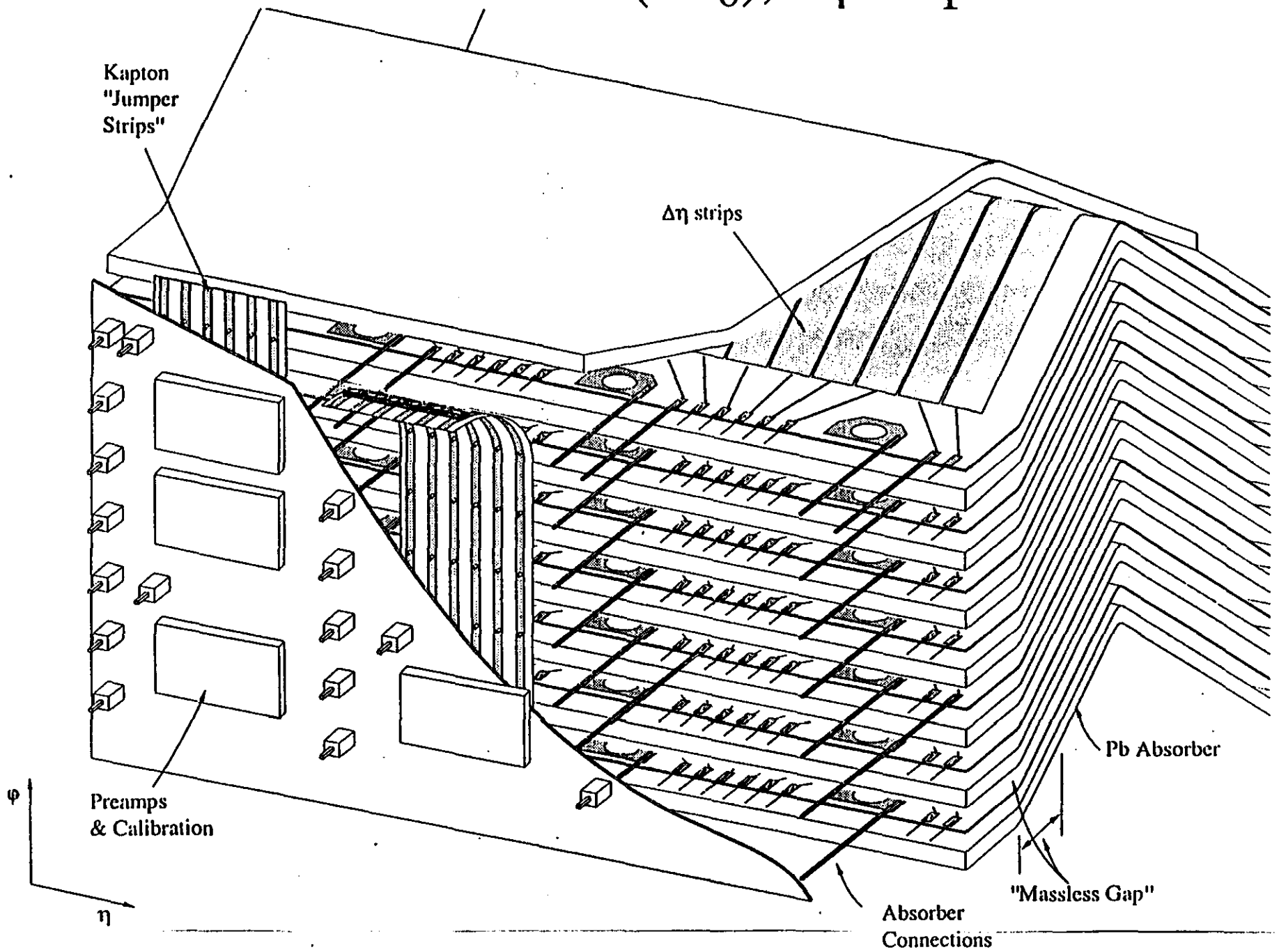

Barrel Signal Electrode

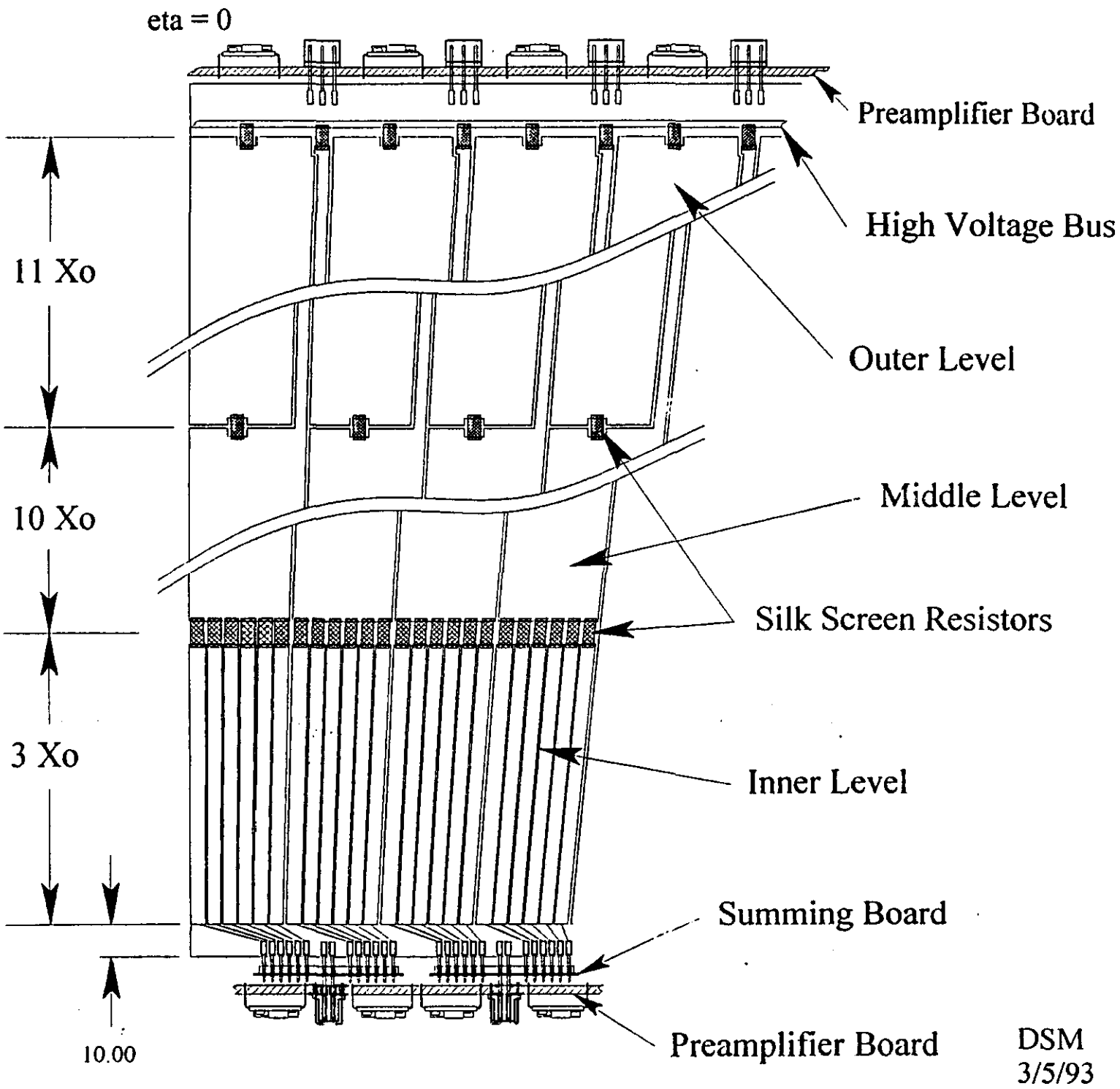

5-12

EM Module Envelope
(9 Degree Segment)

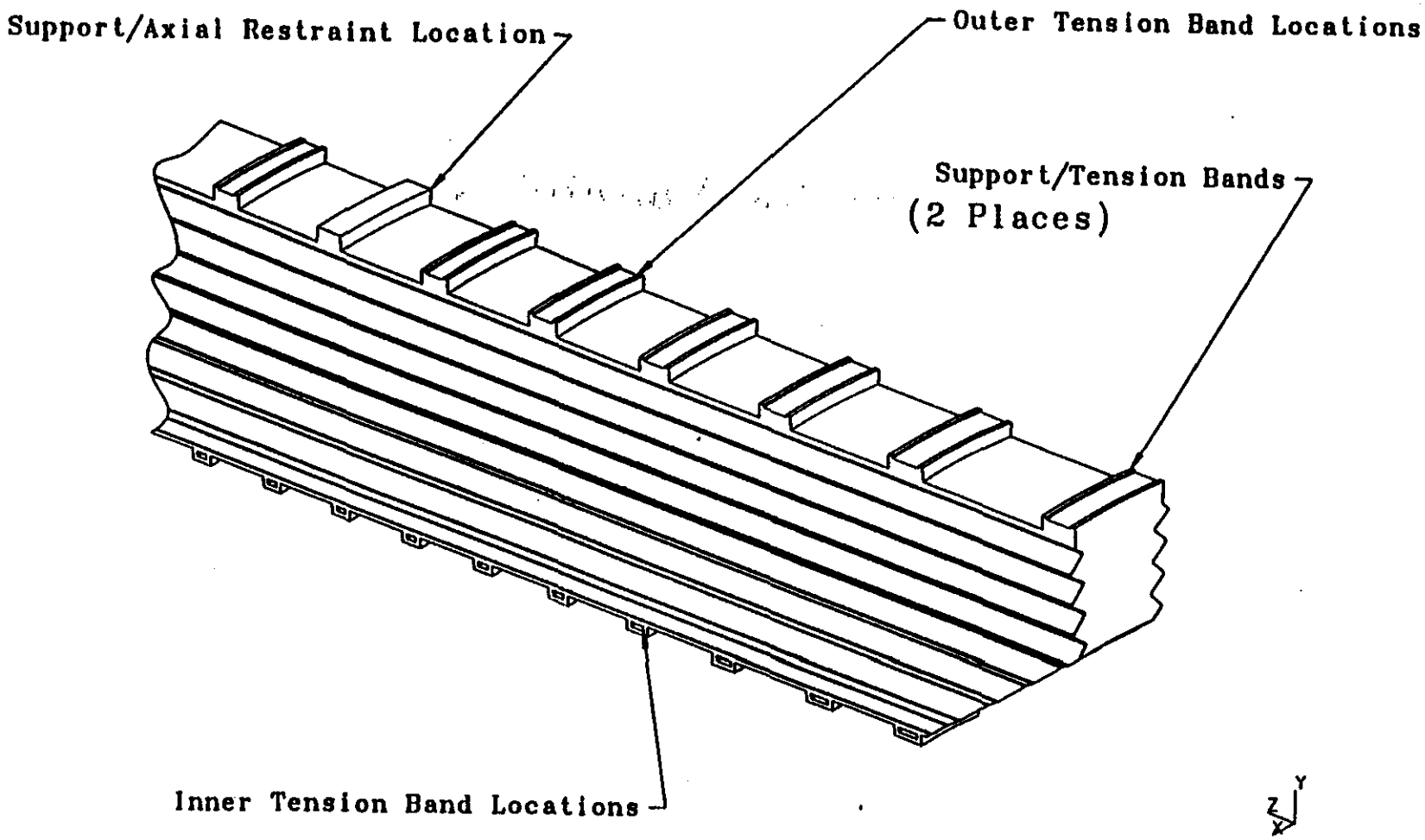

5-13

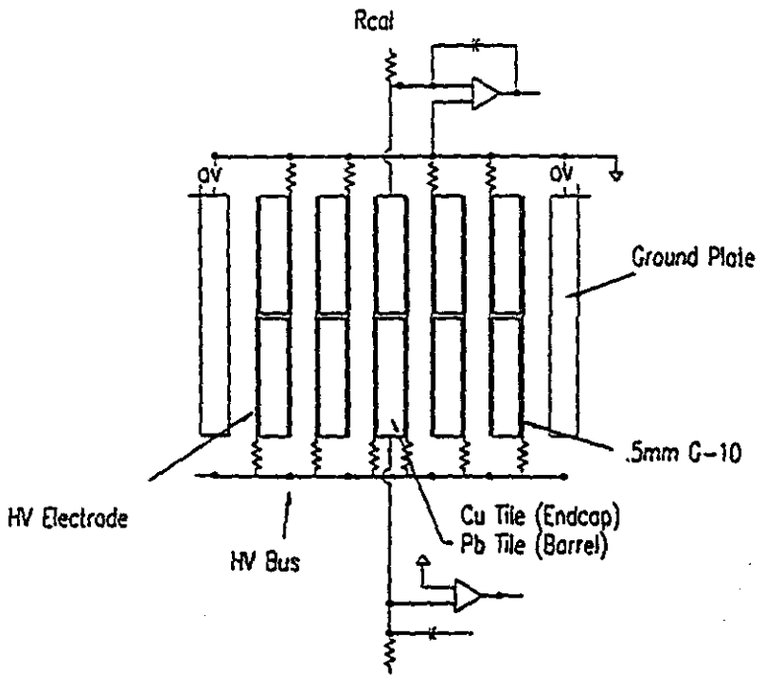

Electrostatic Transformer Configuration

GEM29W_URHADRONCONFIG.DXF
1-4-93

5-14

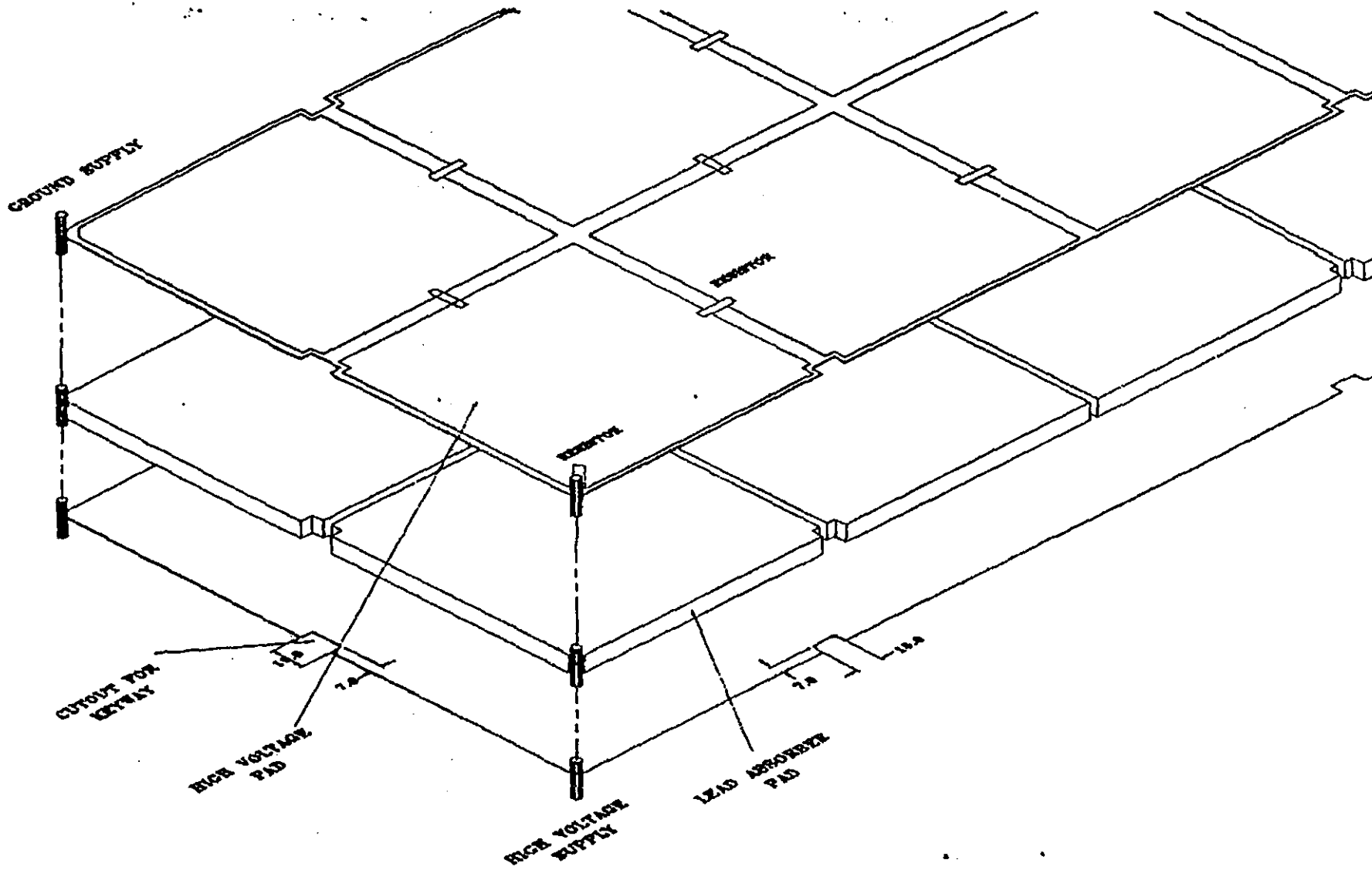

GEM27____URHTTILECONCEPT.DWG
1—20—93

5-15

5-16

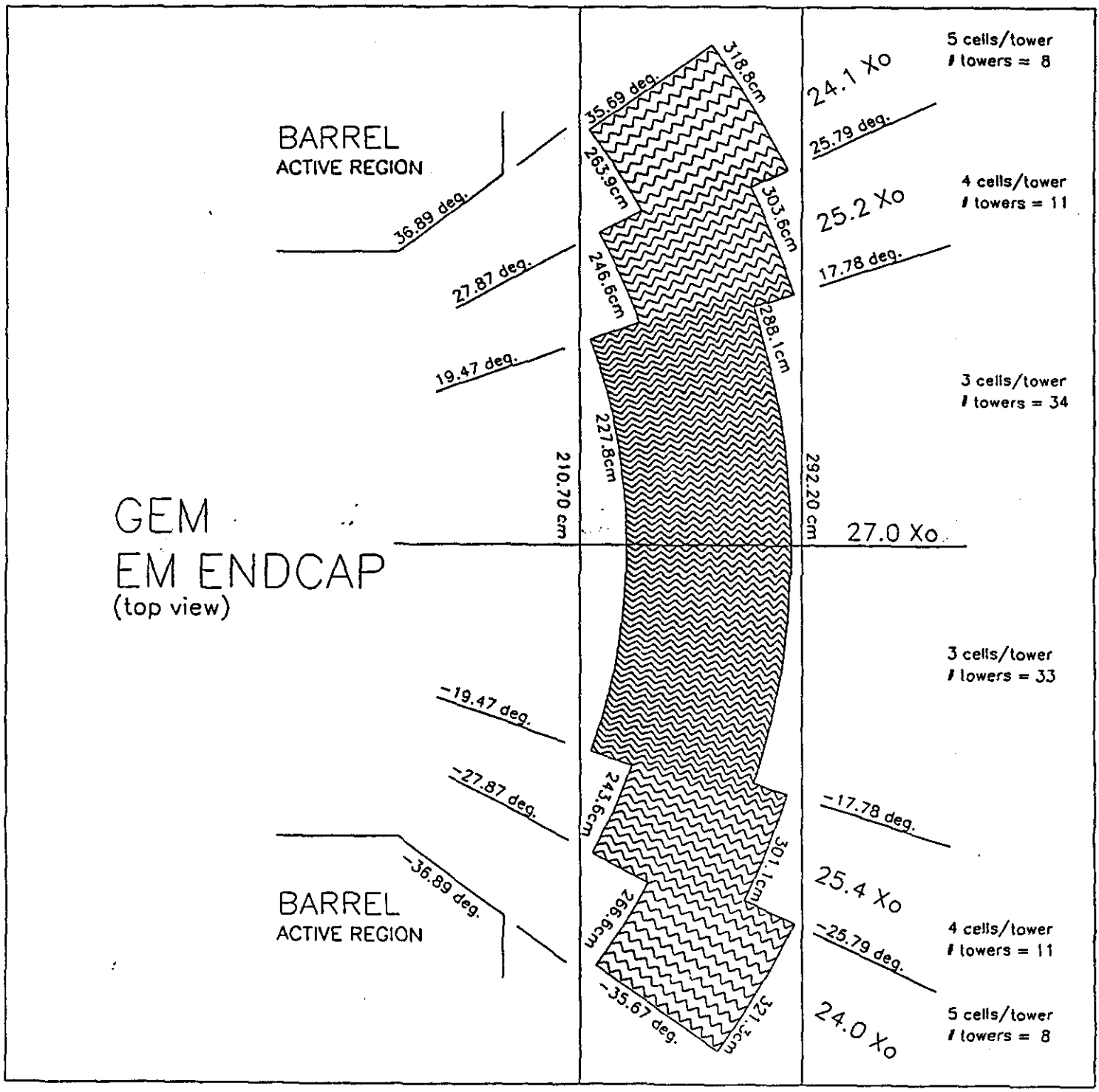
BARREL
ACTIVE REGION
GEM
EM ENDCAP
(top view)
BARREL
ACTIVE REGION
36.89 deg.
27.87 deg.
19.47 deg.
-19.47 deg.
-27.87 deg.
-36.89 deg.
35.69 deg.
263.9cm
318.8cm
246.6cm
303.6cm
227.8cm
288.1cm
210.70 cm
292.20 cm
243.6cm
301.1cm
266.6cm
321.2cm
-35.67 deg.
24.1 Xo
25.79 deg.
25.2 Xo
17.78 deg.
27.0 Xo
-17.78 deg.
25.4 Xo
-25.79 deg.
24.0 Xo
5 cells/tower
towers = 8
4 cells/tower
towers = 11
3 cells/tower
towers = 34
3 cells/tower
towers = 33
4 cells/tower
towers = 11
5 cells/tower
towers = 8

ENDCAP_ SEGMENTATION

5-17

TOWERS IN GEM EM ENDCAP

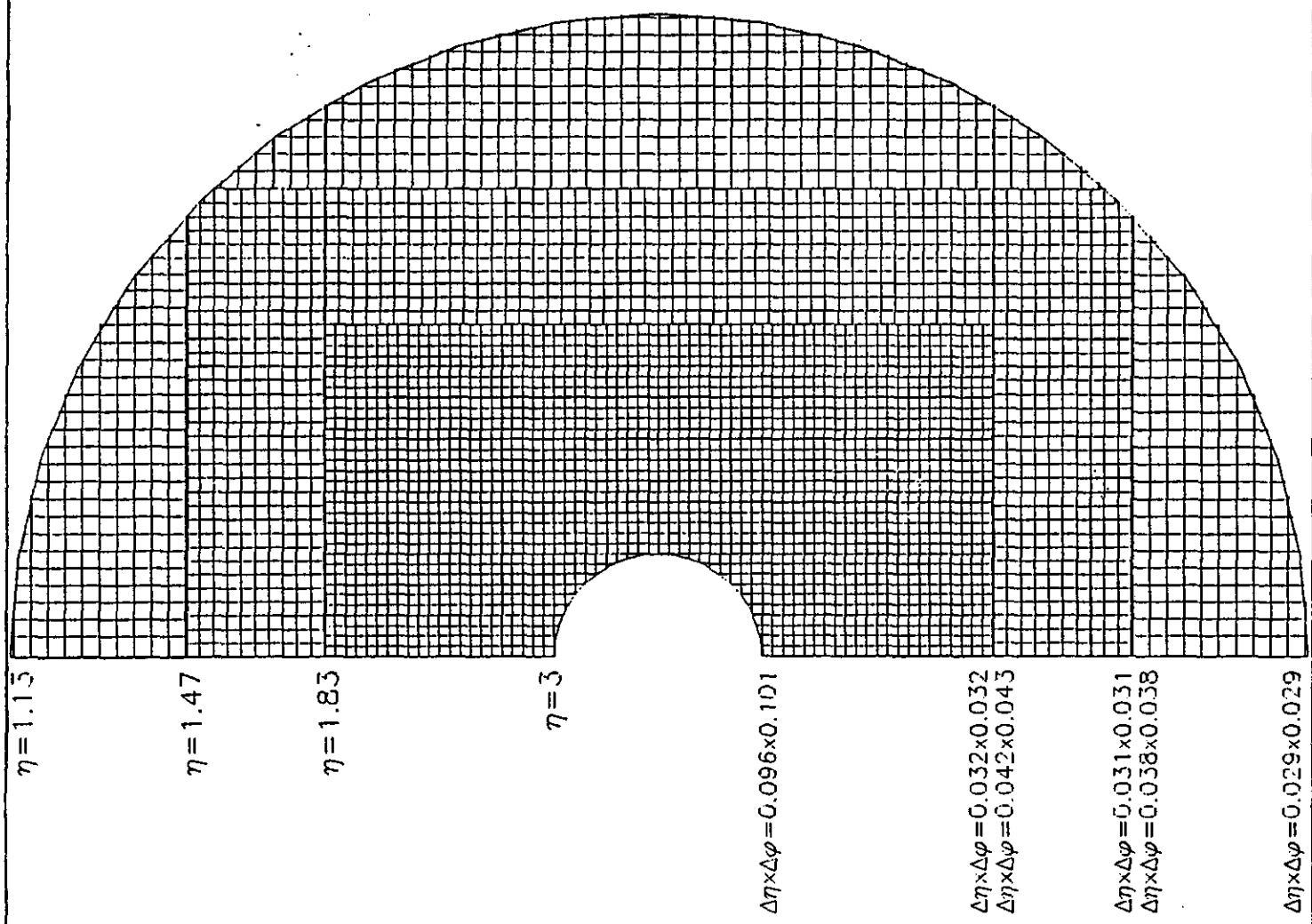

Number complete towers = 44160
Number of incomplete towers = 1128
MAXIMAL NUMBER OF CHANNELS = 45288
(Both endcaps with 3 long. div.)

▫ 3 cells/tower
□ 4 cells/tower
□ 5 cells/tower

STANDARD CELL FOR ENDCAP HADRON CALORIMETER

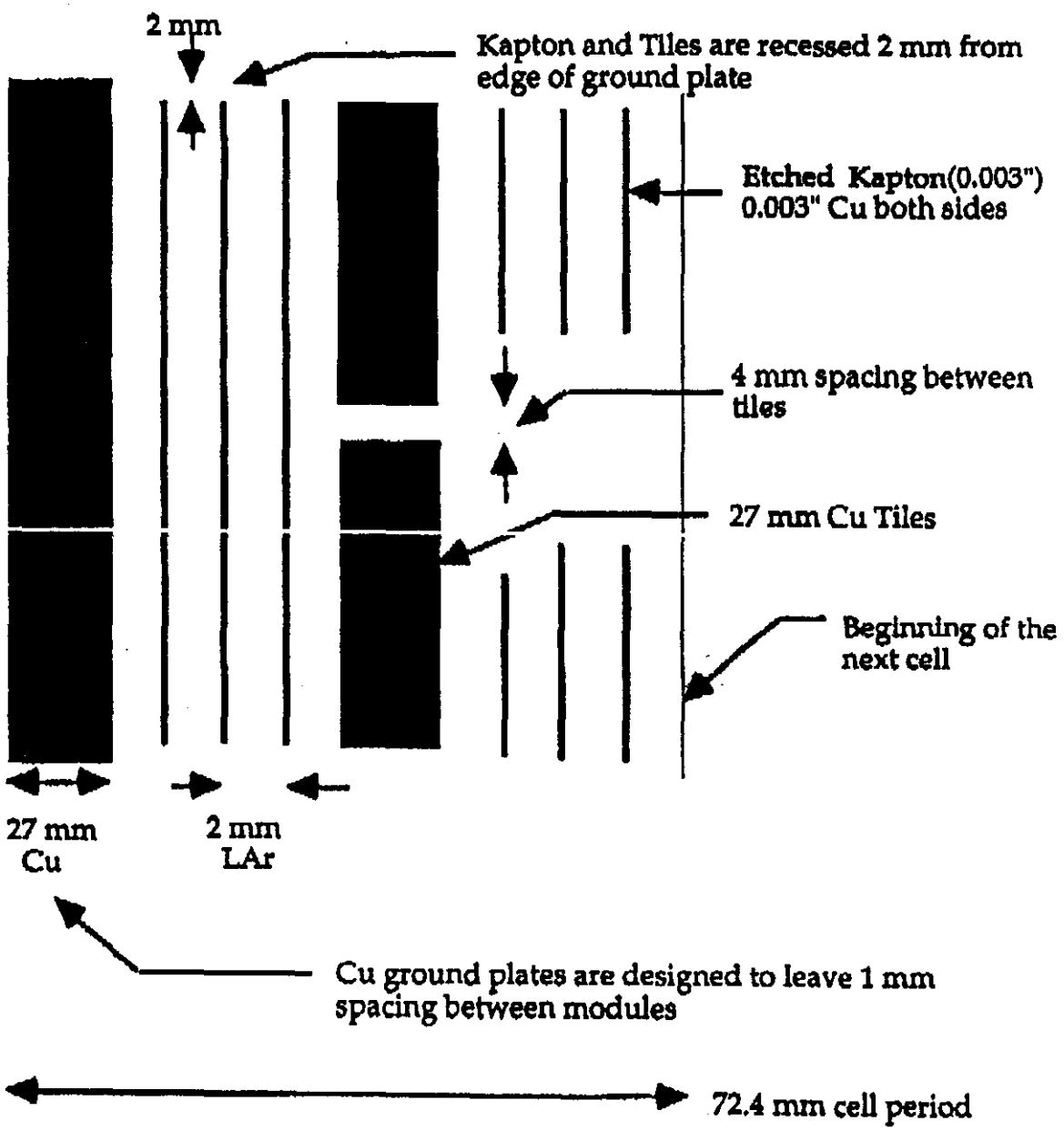

PMM 3/11/93

5-18

Hadronic Endcap Module
Outer B

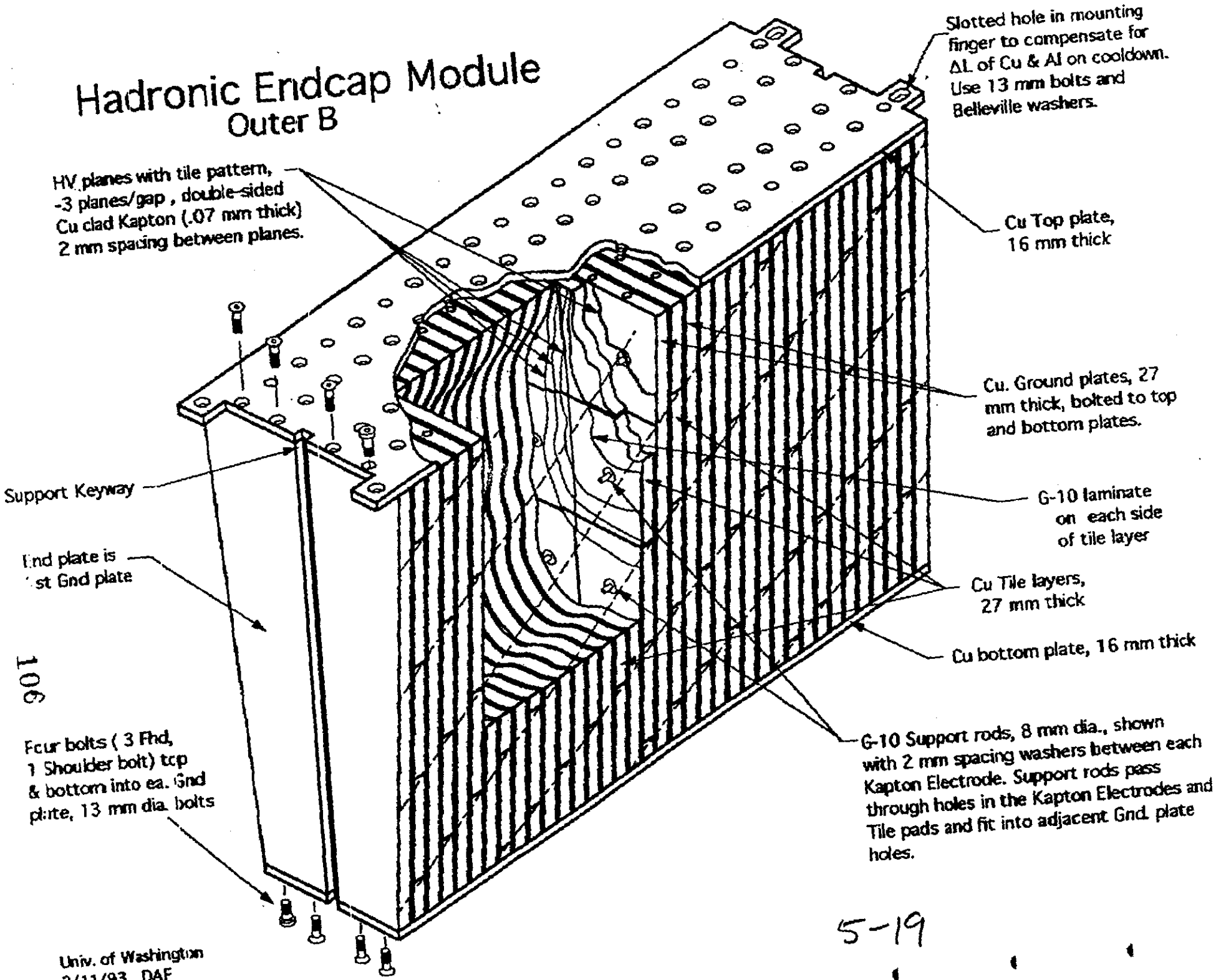

Univ. of Washington
3/11/93 DAF

5-19

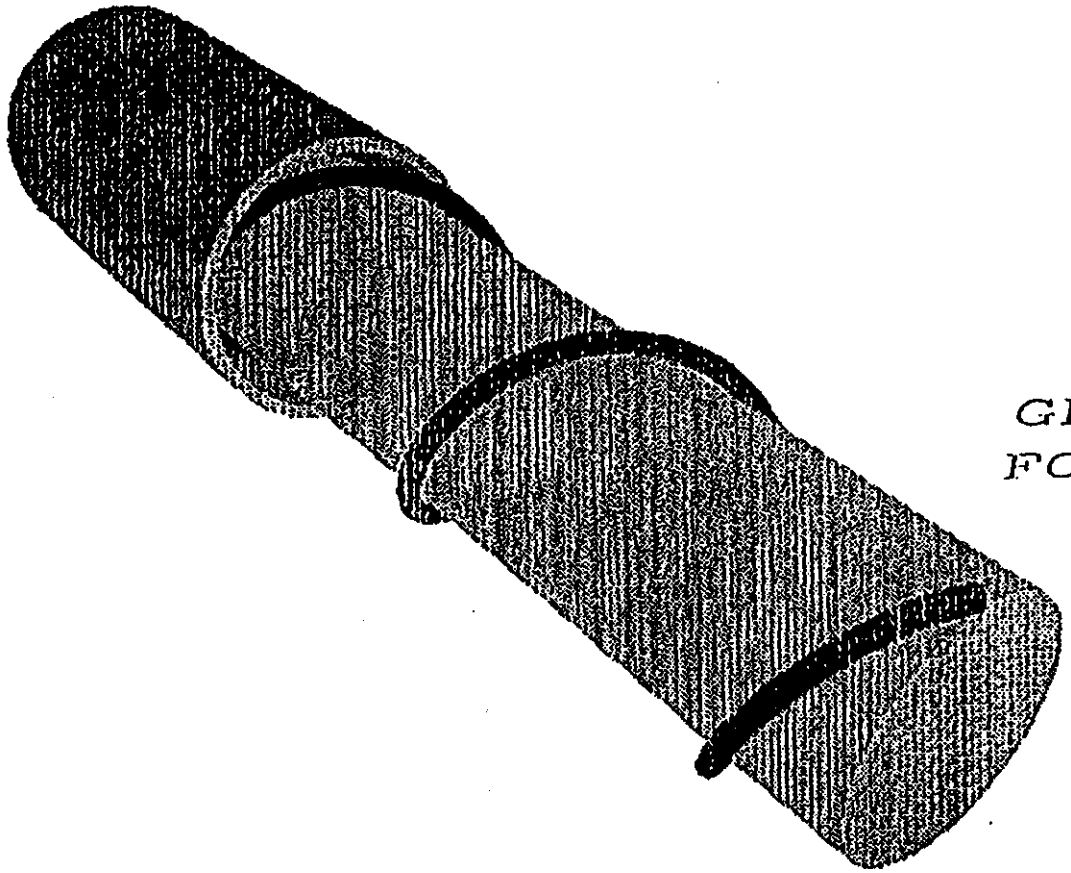

GEM LAC
FCal Tube

5-20

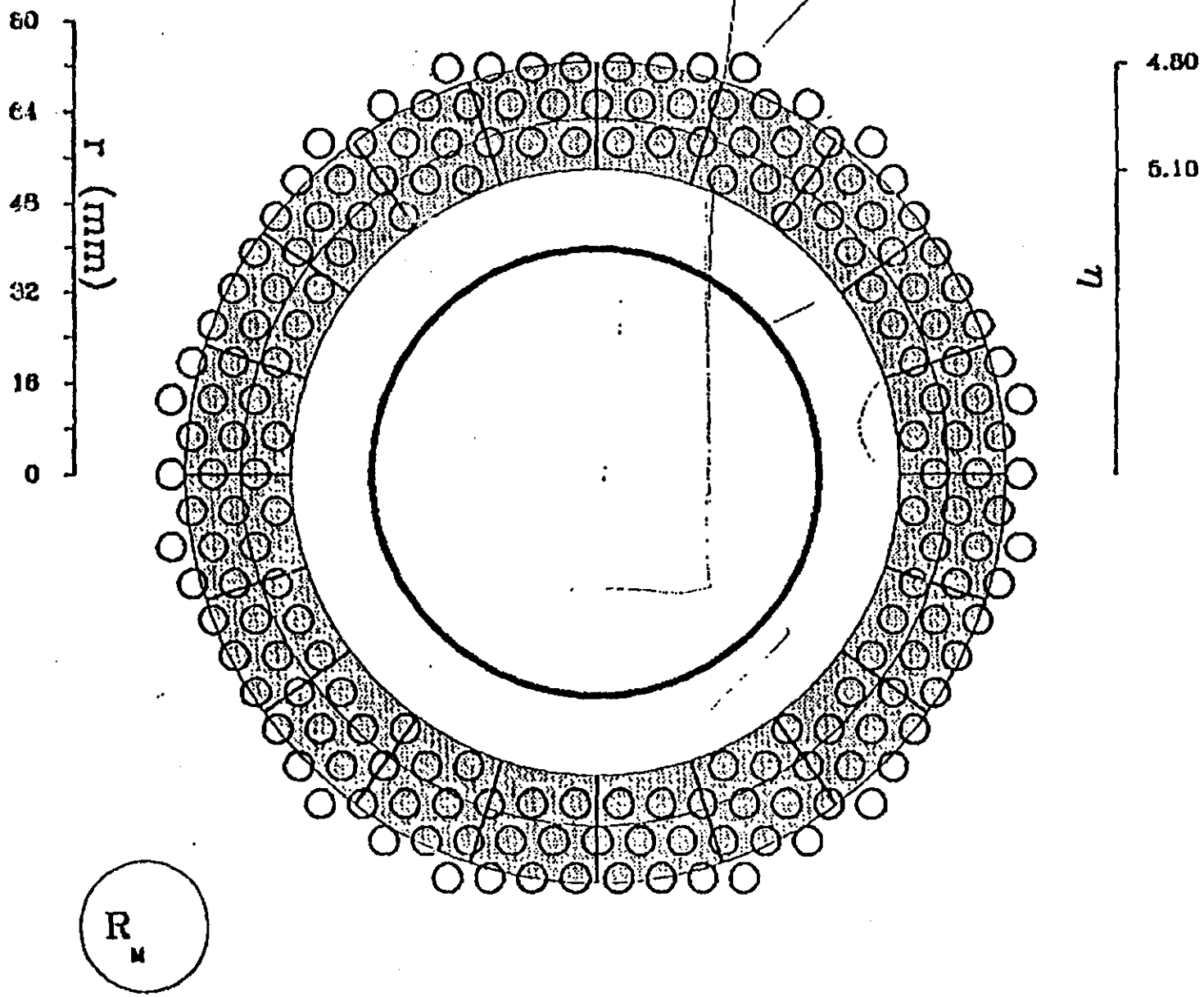

5-21

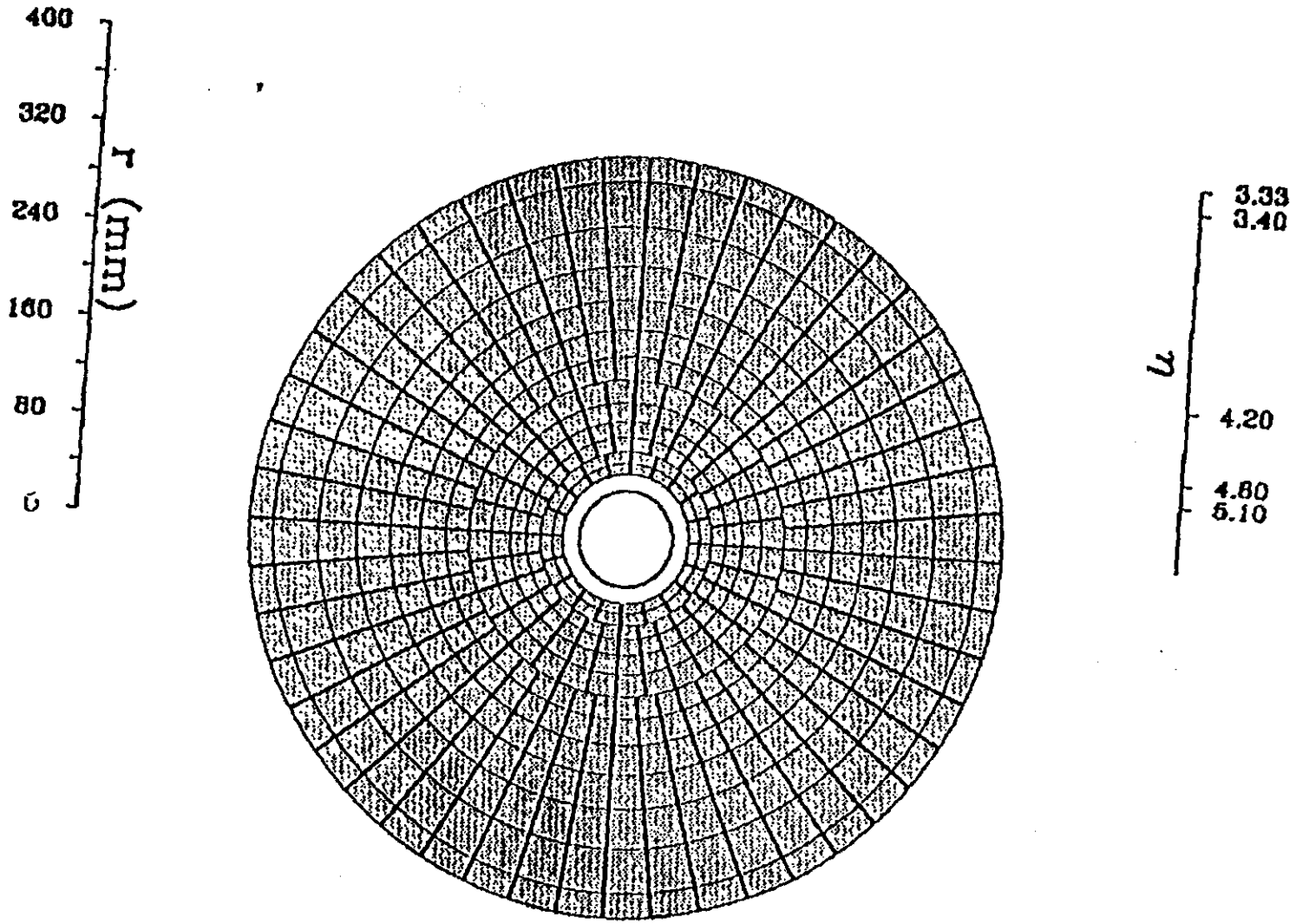

5-22

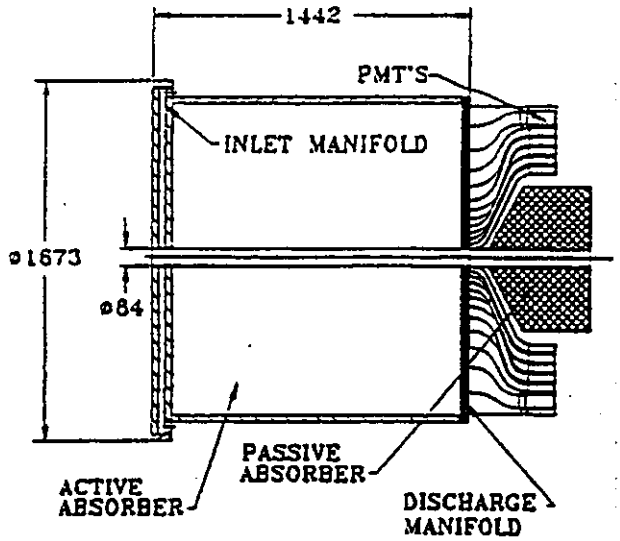

Fig. 5-23 HAD FCAL Module Arrangement

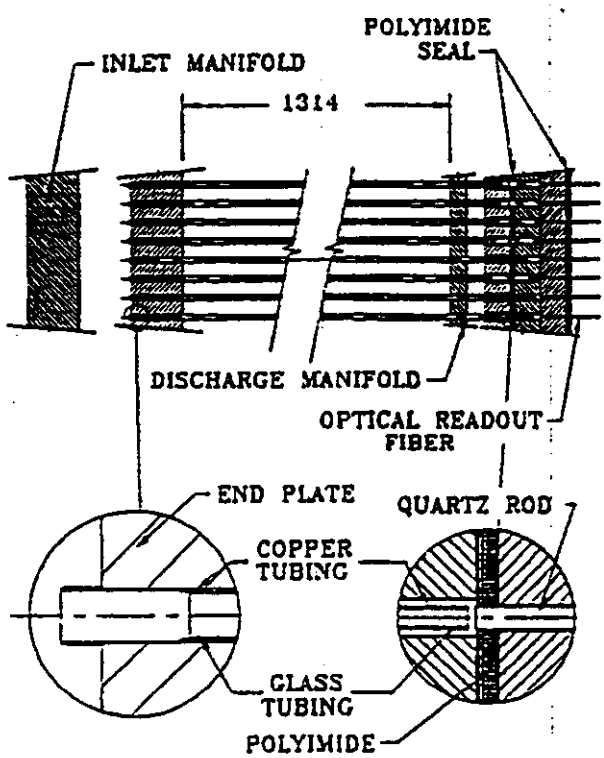

Fig. 5-24 Detail of Capillaries and Readout Section.

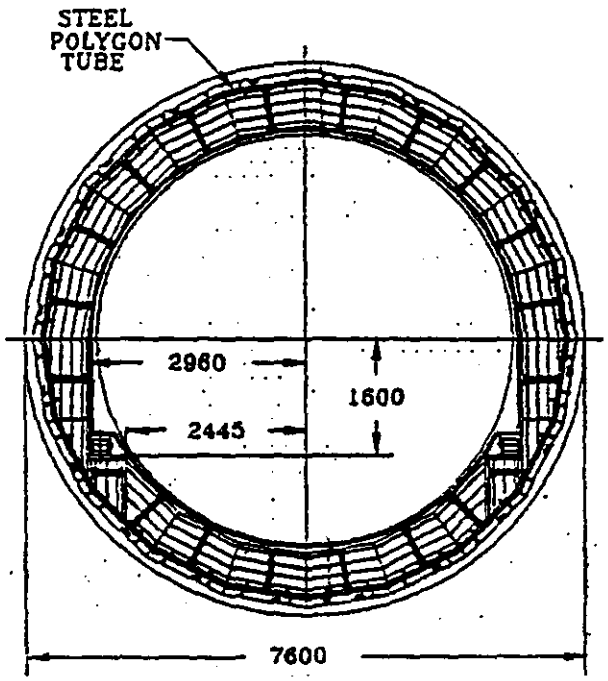

FIG. 5-26

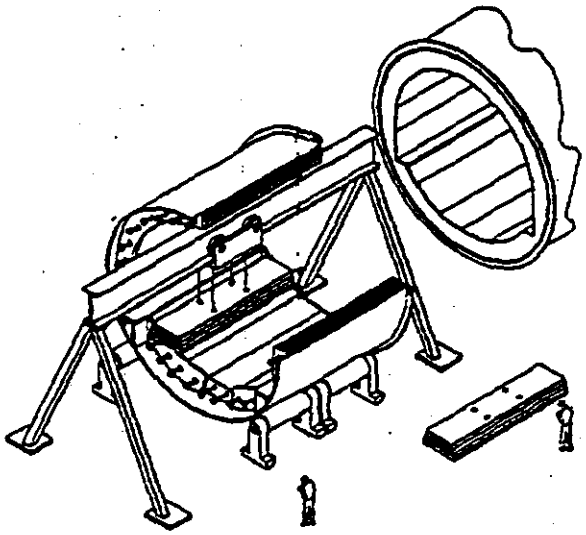

FIG. 5-25

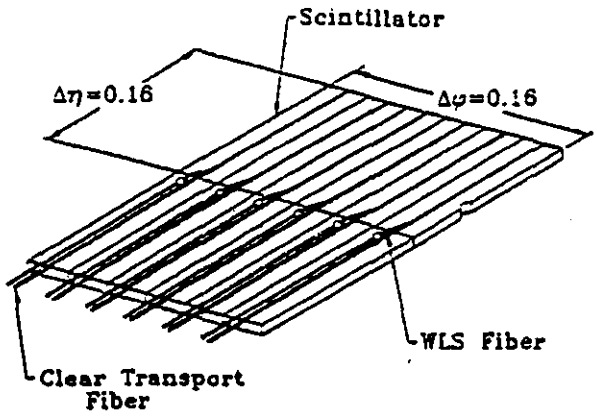

FIG. 5-28

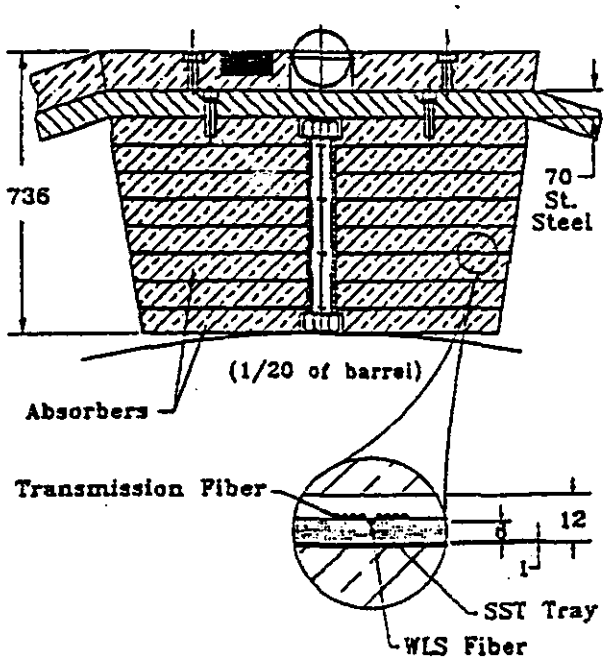

FIG. 5-27

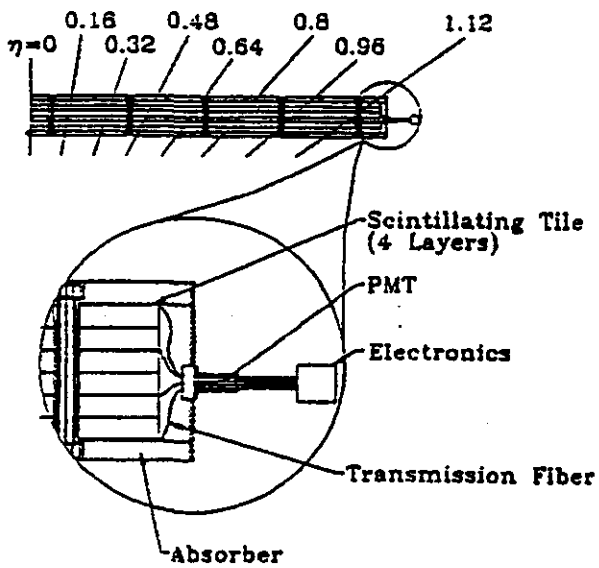
η=0
0.16
0.32
0.48
0.64
0.8
0.96
1.12
Scintillating Tile
(4 Layers)
PMT
Electronics
Transmission Fiber
Absorber

FIG. 5-29

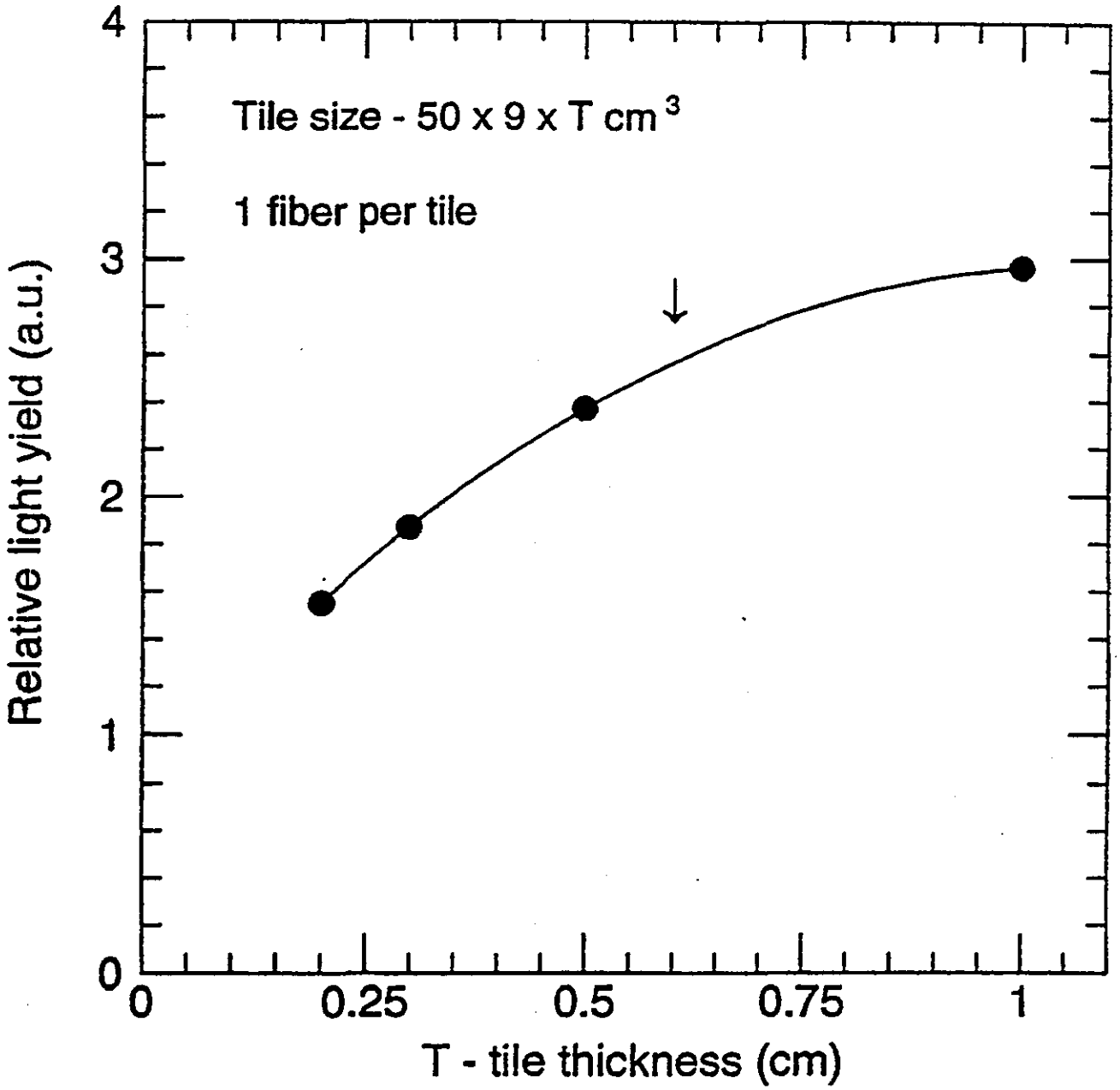
Tile size - 50 x 9 x T cm 3
1 fiber per tile
Relative light yield (a.u.)
T - tile thickness (cm)
0
1
2
3
4
0
0.25
0.5
0.75
1

Fig. 5-30

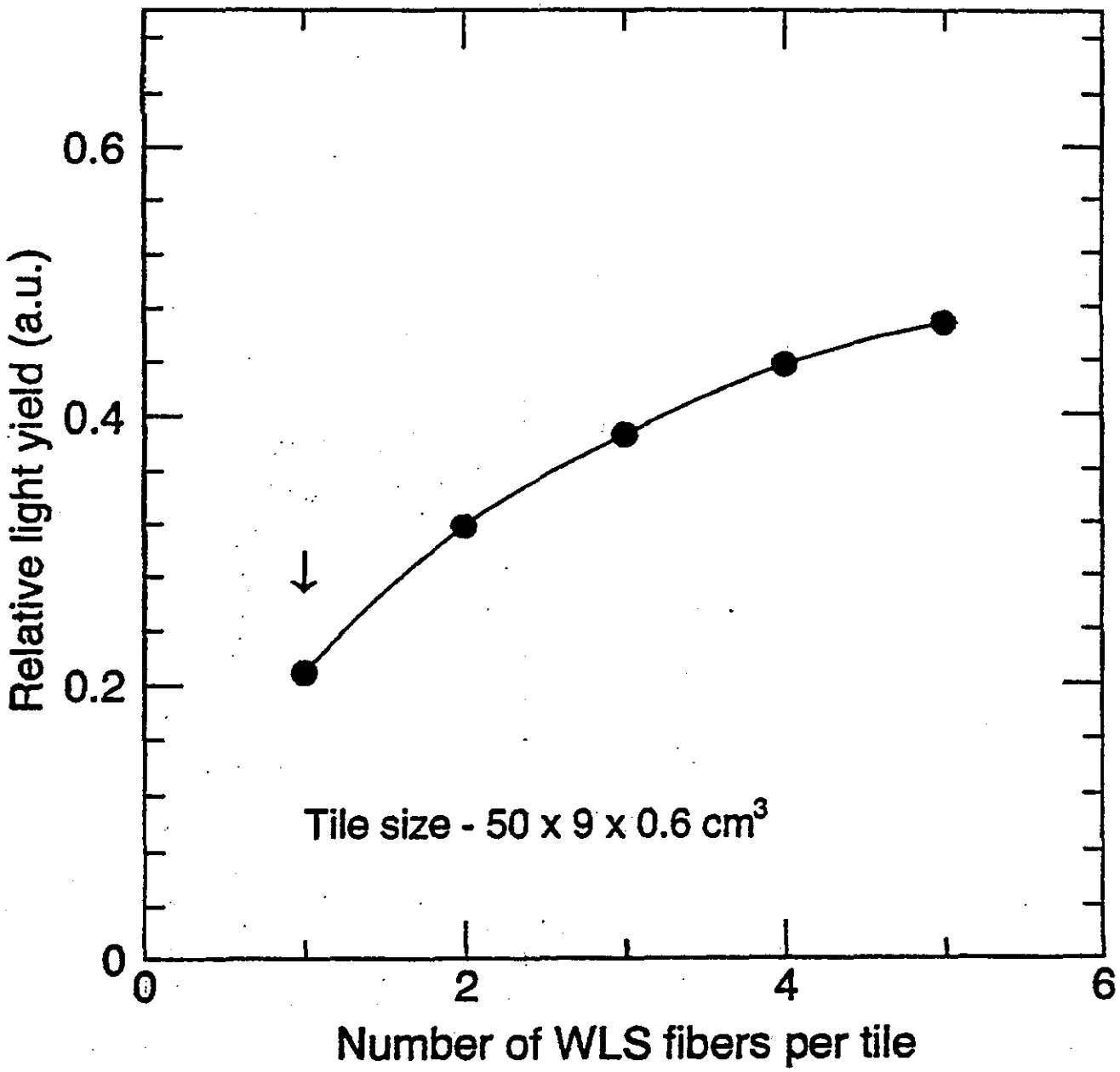
0.6
0.4
0.2
0
Relative light yield (a.u.)
Tile size - 50 x 9 x 0.6 cm^3
0
2
4
6
Number of WLS fibers per tile

Fig. 5-31

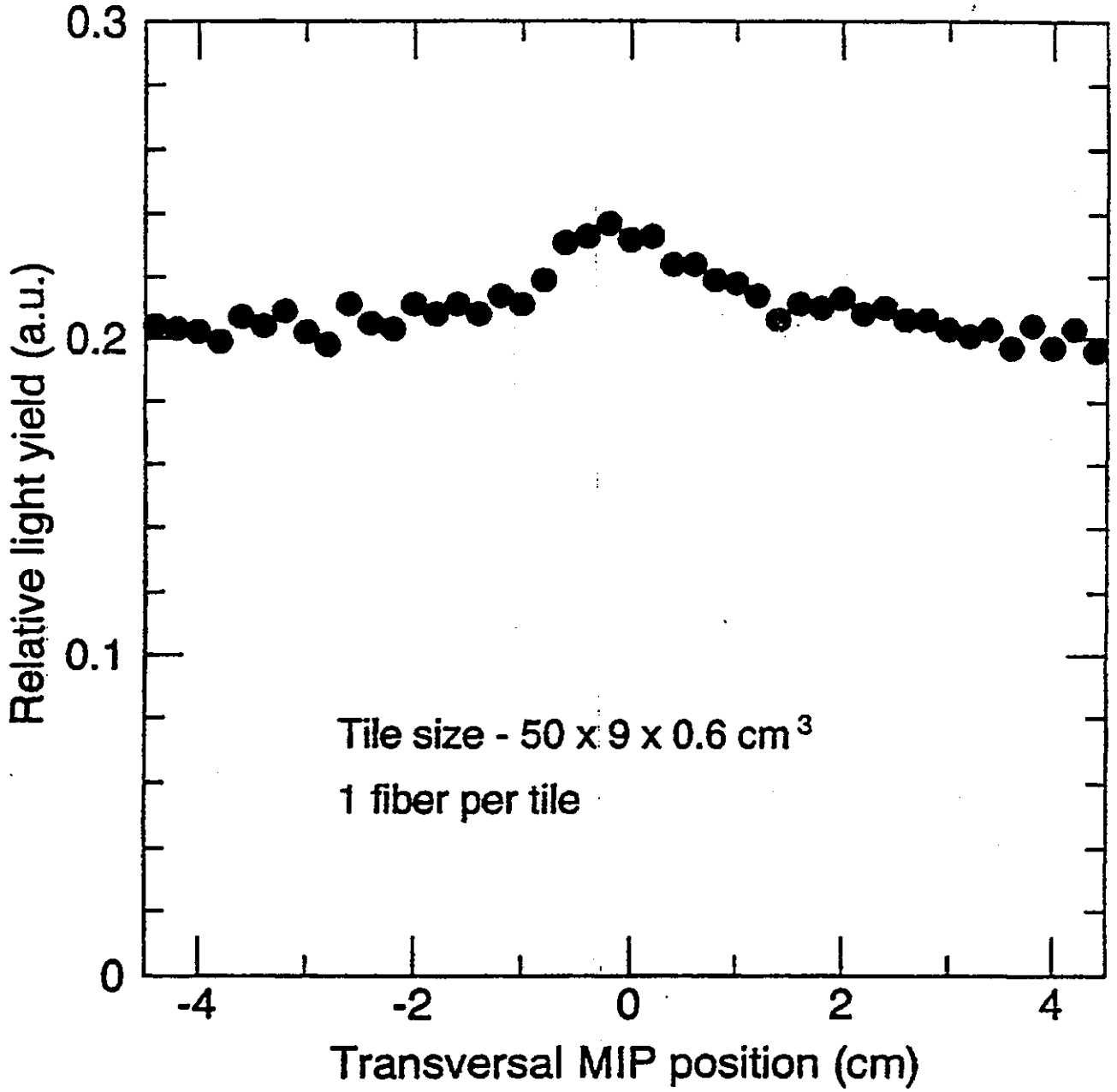
0.3
0.2
0.1
0
Relative light yield (a.u.)
Tile size - 50 x 9 x 0.6 cm³
1 fiber per tile
-4
-2
0
2
4
Transversal MIP position (cm)

Fig. 5-32

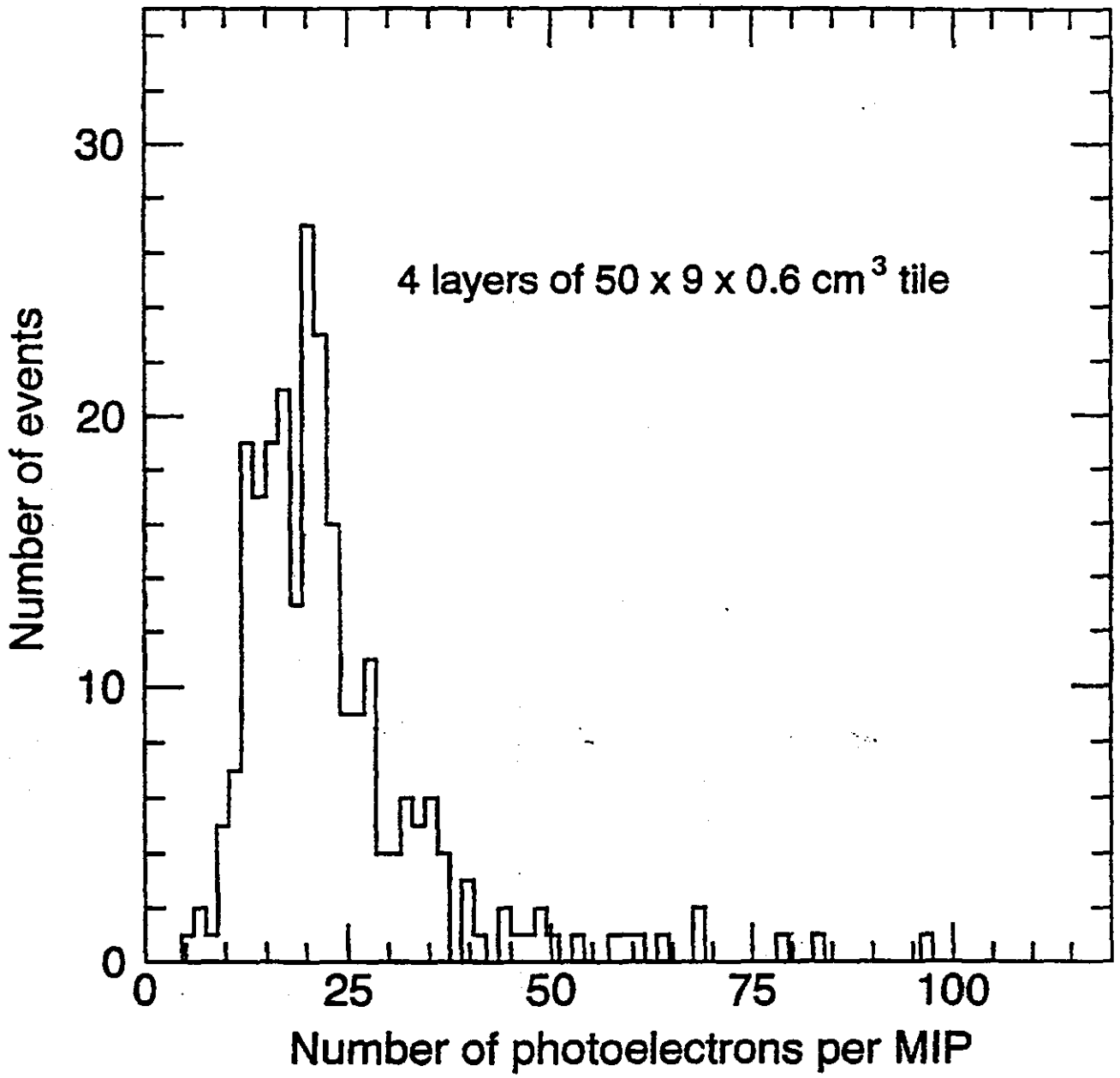
4 layers of 50 x 9 x 0.6 cm^3 tile
Number of events
Number of photoelectrons per MIP
0
10
20
30
0
25
50
75
100

Fig. 5-33

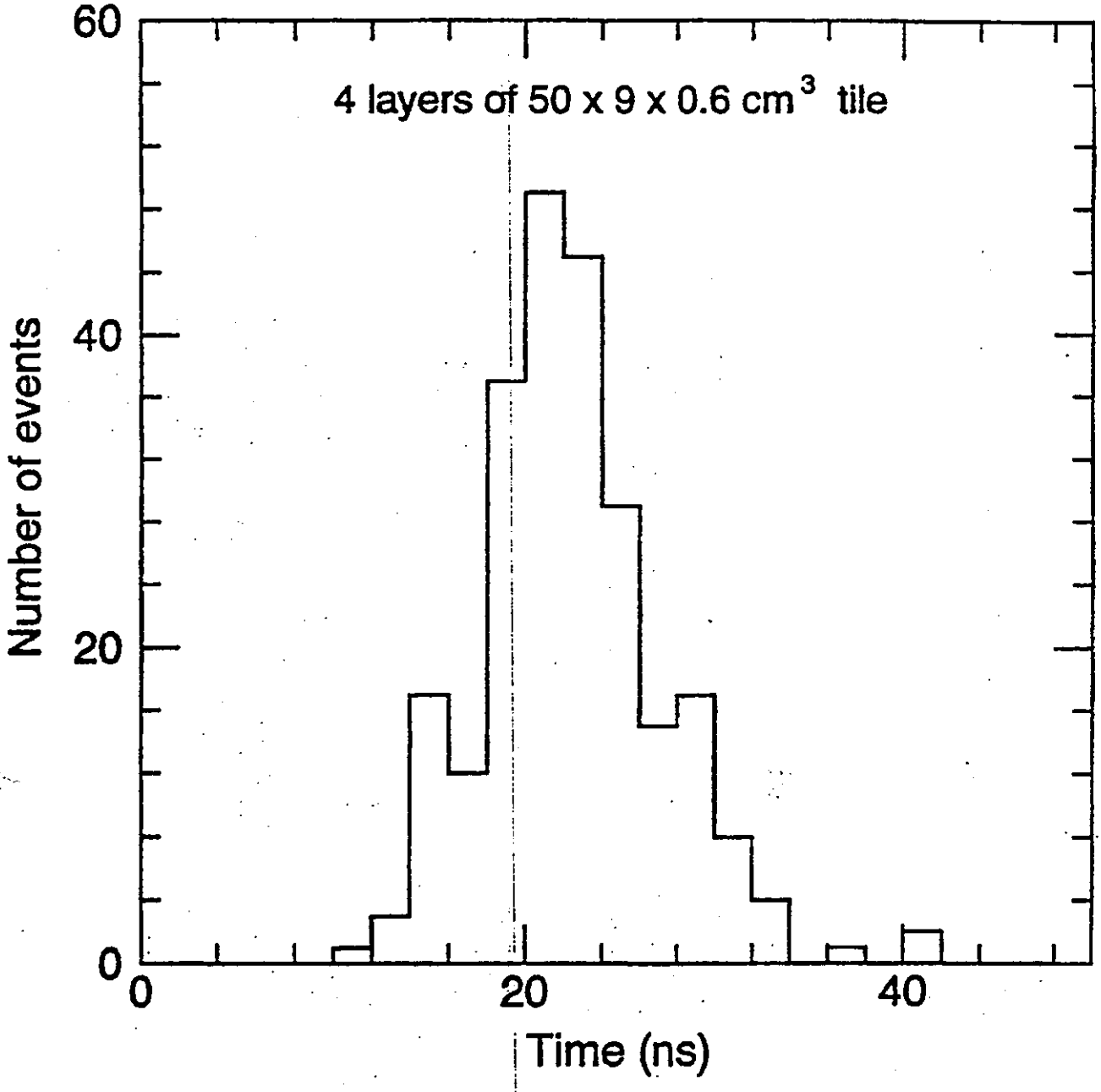
4 layers of 50 x 9 x 0.6 cm^3 tile
Number of events
Time (ns)
0
20
40
60
0
20
40

Fig. 5-34

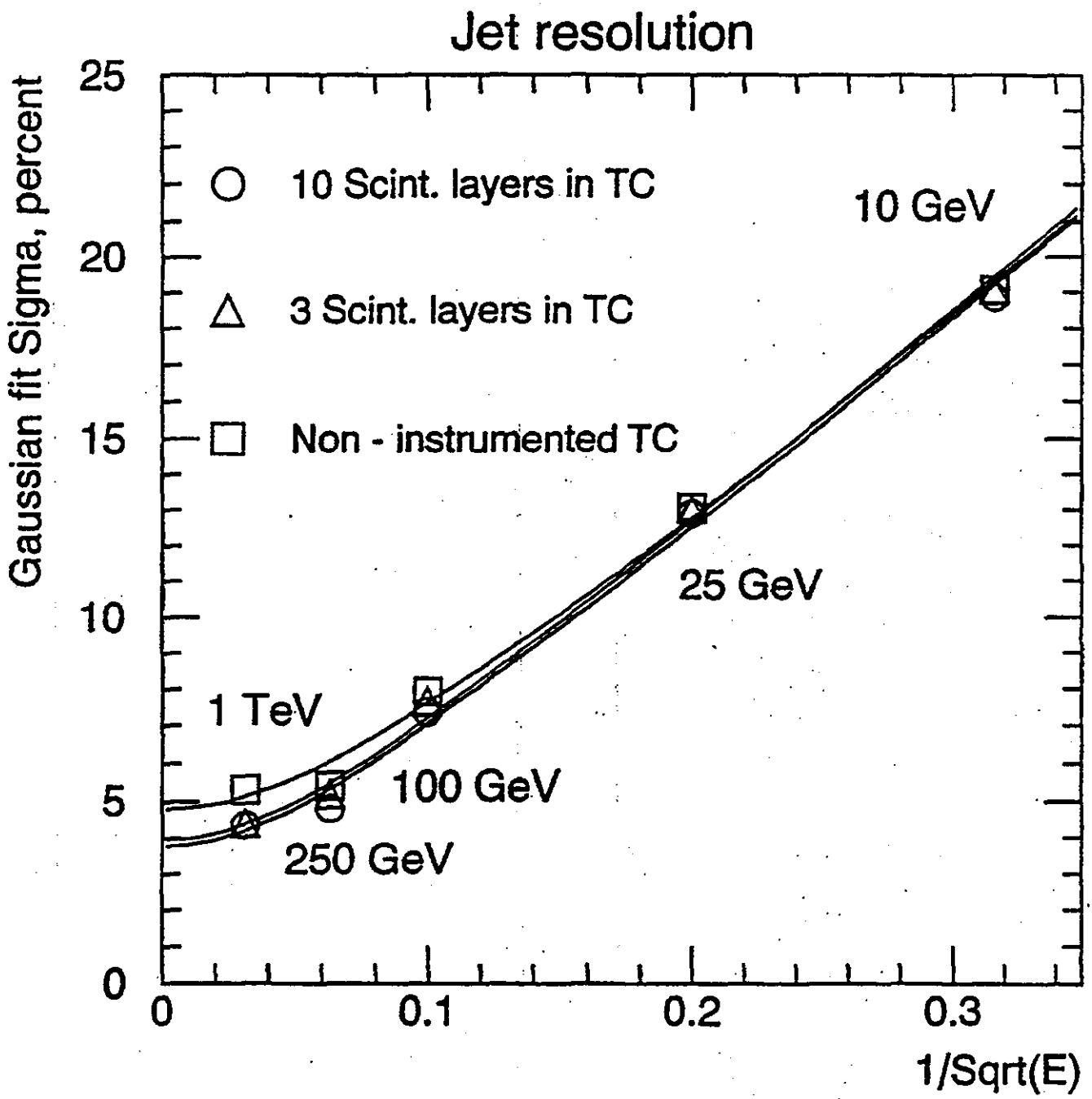
Jet resolution
Gaussian fit Sigma, percent
25
20
15
10
5
0
0
0.1
0.2
0.3
1/Sqrt(E)
10 Scint. layers in TC
3 Scint. layers in TC
Non - instrumented TC
10 GeV
25 GeV
1 TeV
100 GeV
250 GeV

Fig. 5-35

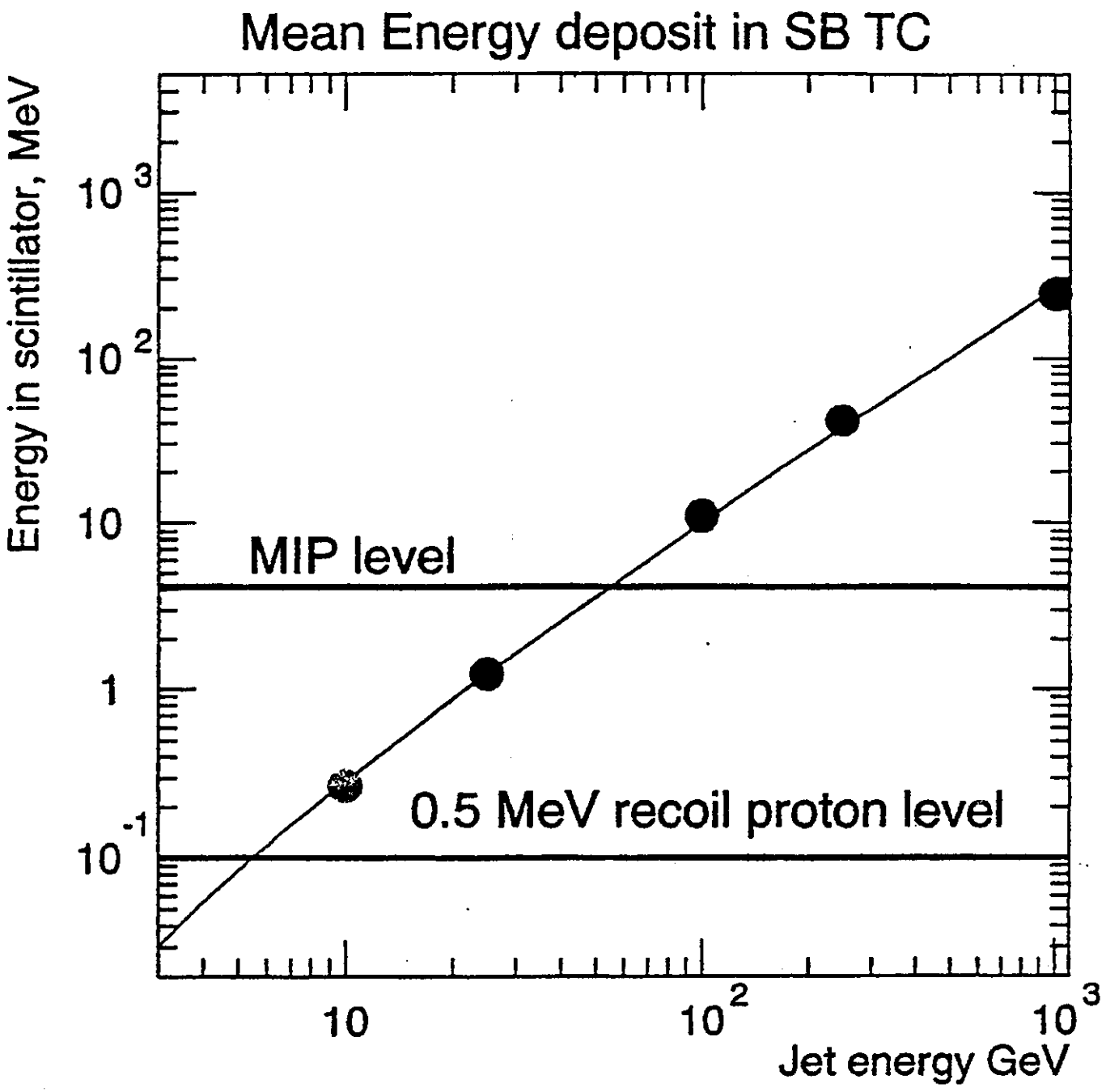
Mean Energy deposit in SB TC
Energy in scintillator, MeV
10^3
10^2
10
1
10^{-1}
MIP level
0.5 MeV recoil proton level
10
10^2
10^3
Jet energy GeV

Fig. 5-36

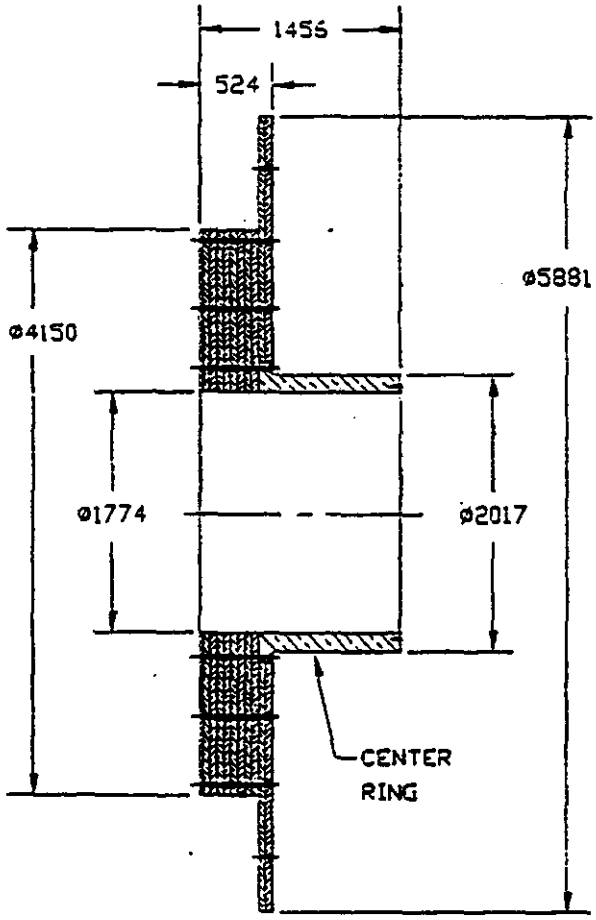

FIG. 5-37

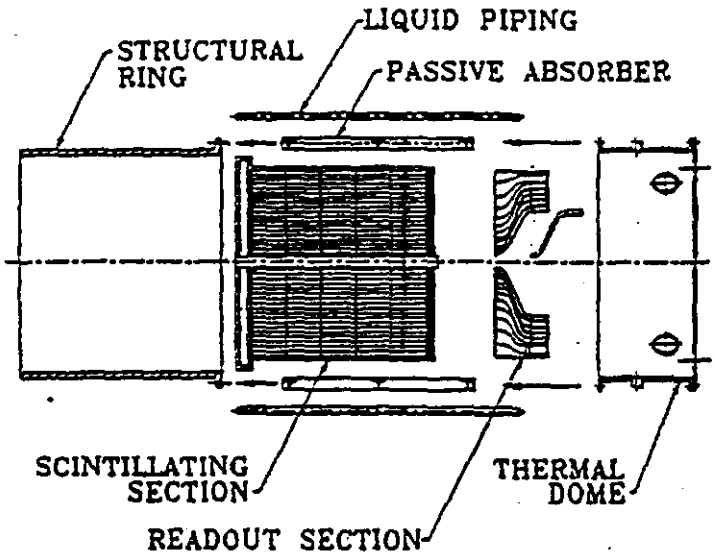

Fig. 5.7.4–1 HAD FCAL Assembly Sequence.

Fig. 5-46a

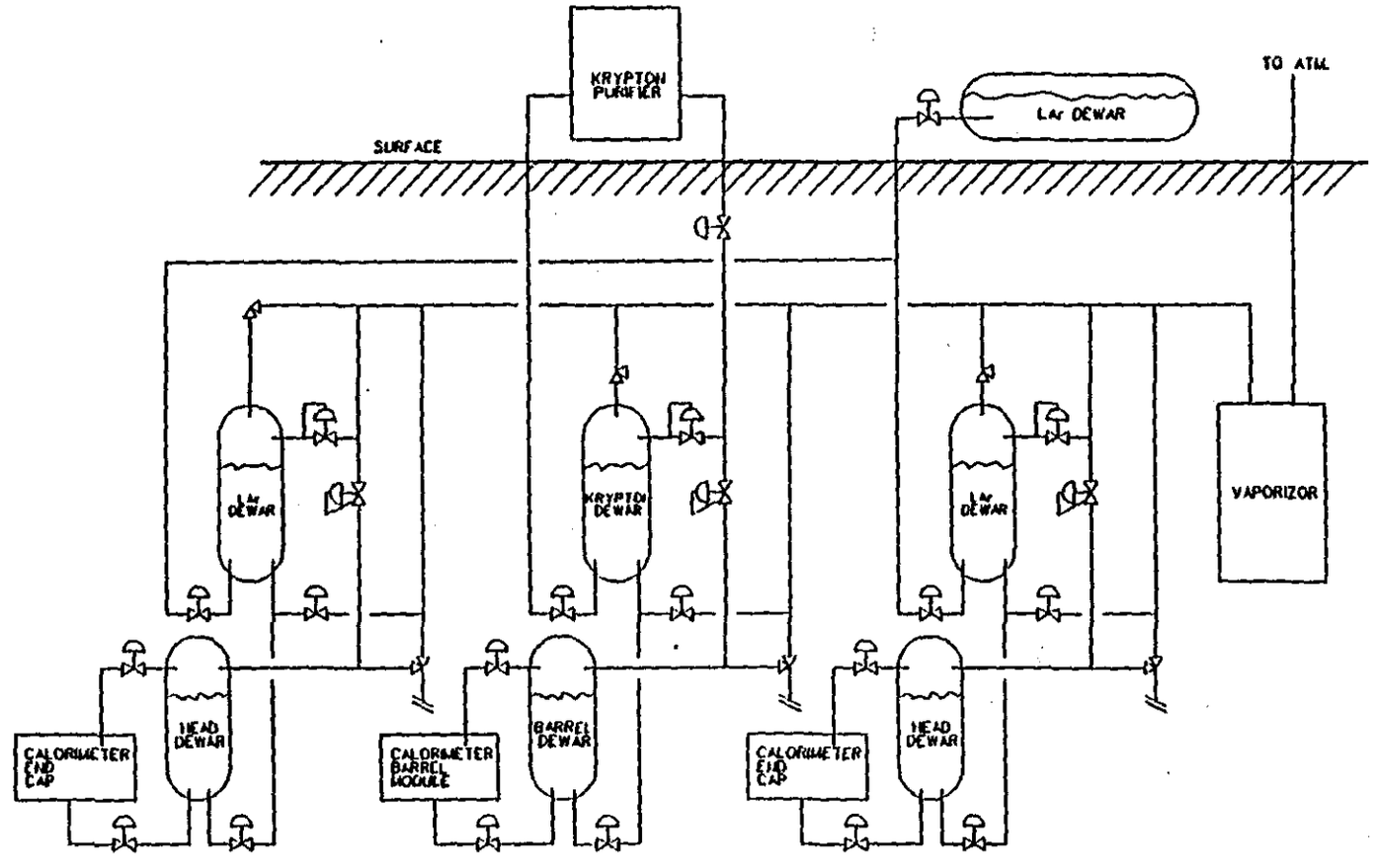

GEM CALORIMETER
LIQUID KRYPTON/ARGON
SUPPLY SYSTEM

LIOCAL
REF. FILE(S):NONE
01/06/93
WILLIAM R. PETERSON

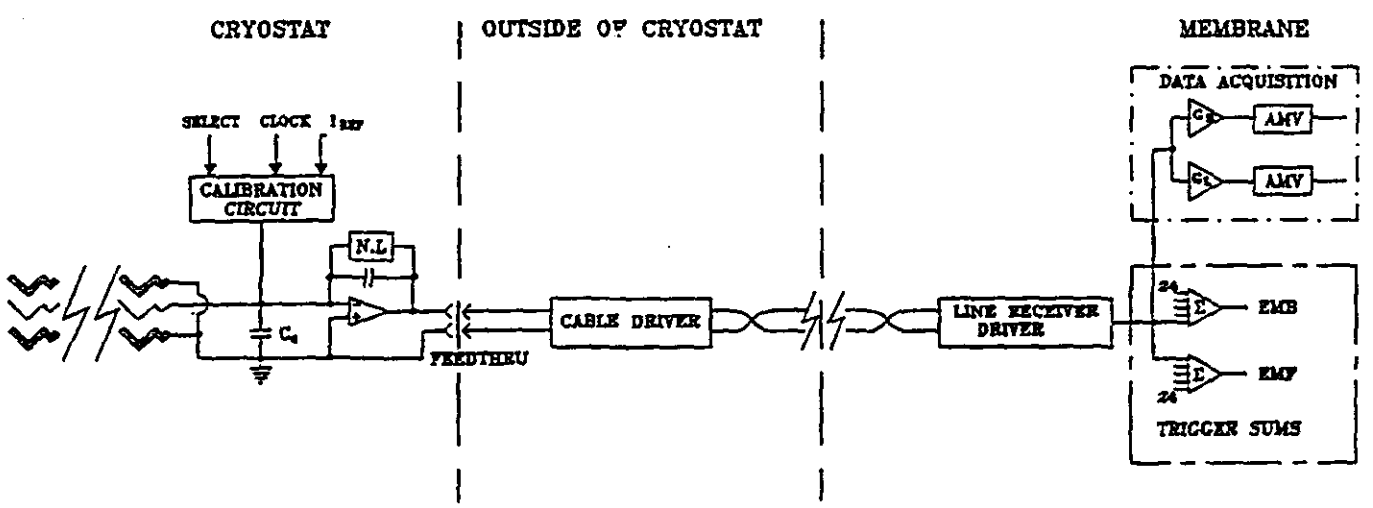
CRYOSTAT
OUTSIDE OF CRYOSTAT
MEMBRANE
DATA ACQUISITION
SELECT
CLOCK
CALIBRATION CIRCUIT
N.L
FEEDTHRU
CABLE DRIVER
LINE RECEIVER DRIVER
AMV
AMV
EMB
EMF
TRIGGER SUMS

5-39

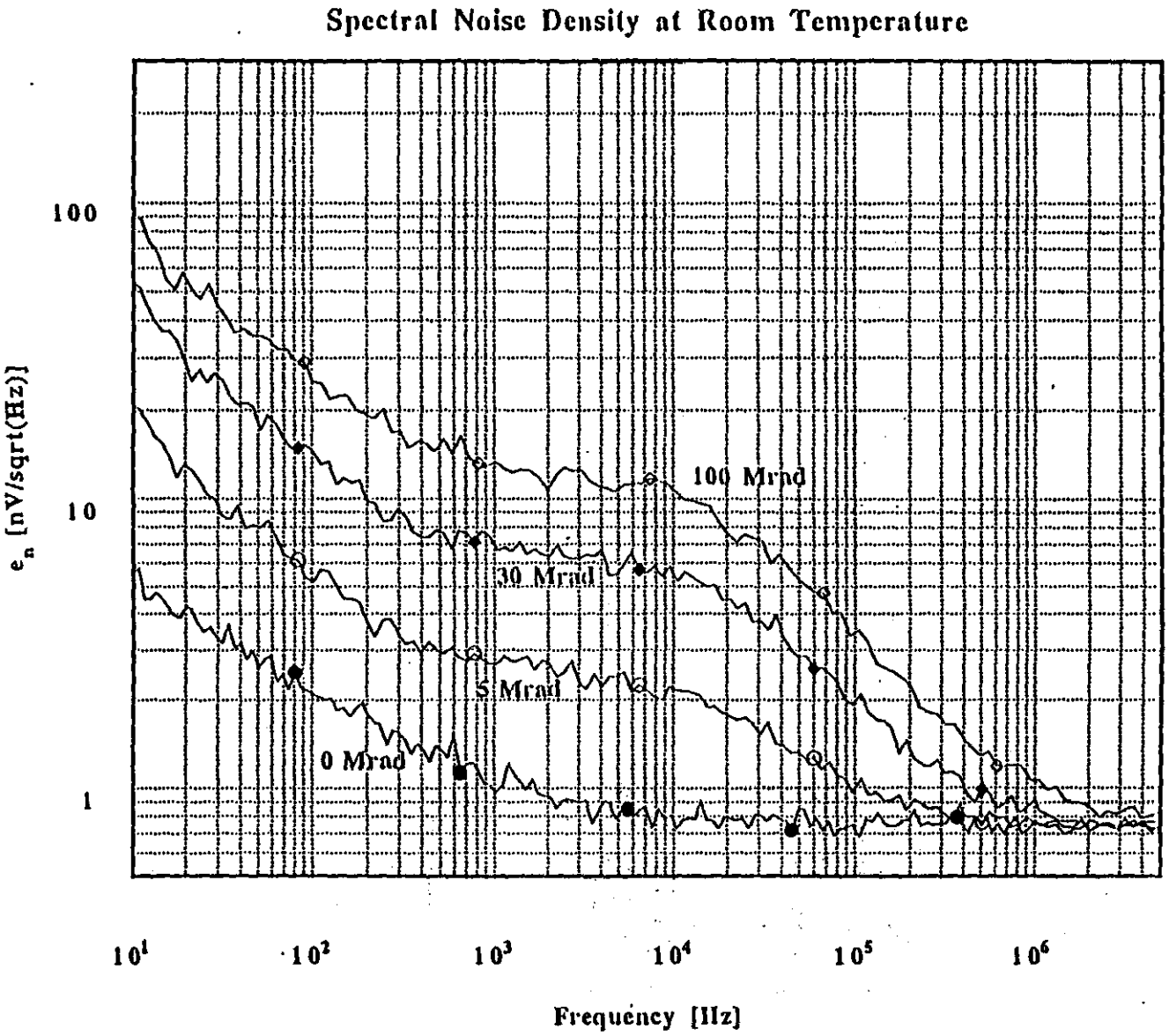
Spectral Noise Density at Room Temperature
100
10
1
e_n [nV/sqrt(Hz)]
100 Mrad
30 Mrad
5 Mrad
0 Mrad
10^1
10^2
10^3
10^4
10^5
10^6
Frequency [Hz]

5-439
5 of 2.

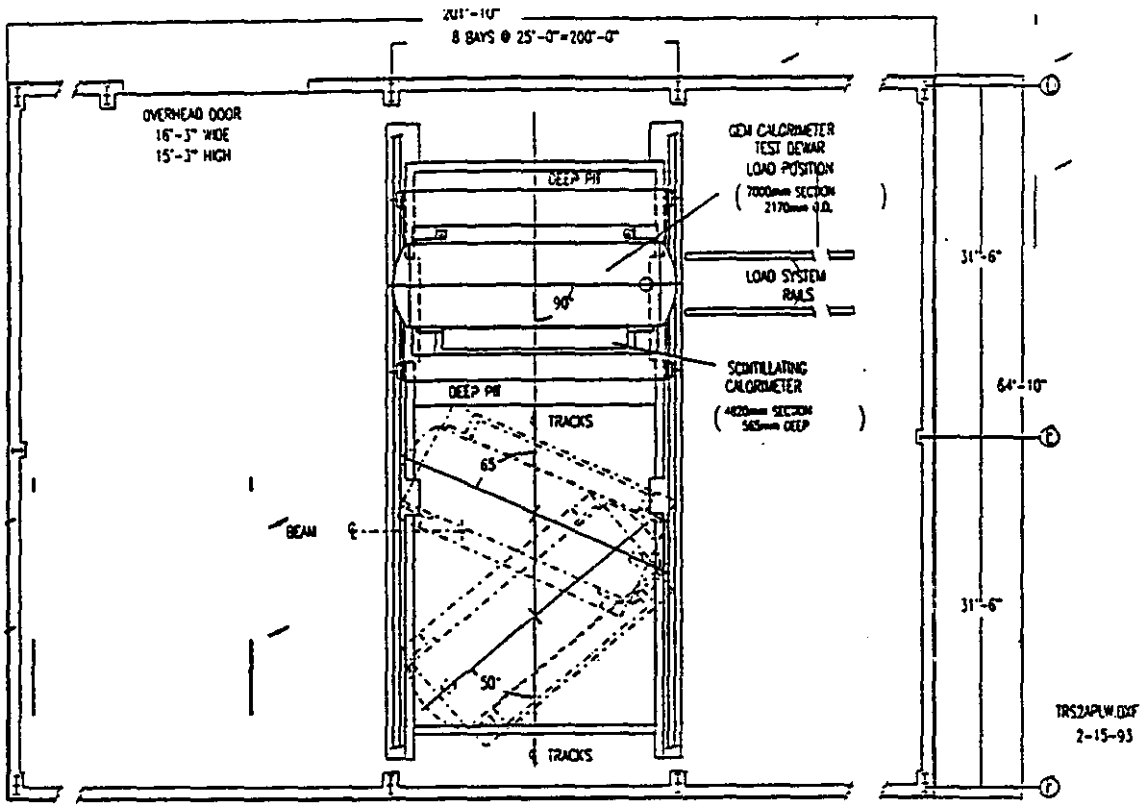
8 BAYS @ 25'-0"=200'-0"
OVERHEAD DOOR
16'-3" WIDE
15'-3" HIGH
DEEP PIT
GDH CALORIMETER
TEST DEWAR
LOAD POSITION
LOAD SYSTEM
RAILS
90°
SCINTILLATING
CALORIMETER
DEEP PIT
TRACKS
65°
BEAM
50°
TRACKS
31'-6"
64'-10"
31'-6"
TRS2APLW.DXF
2-15-93

5-47

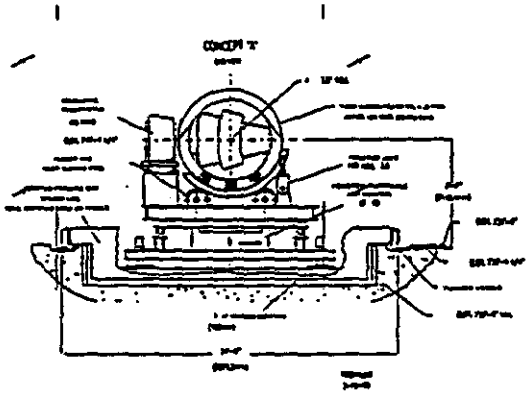

5-48

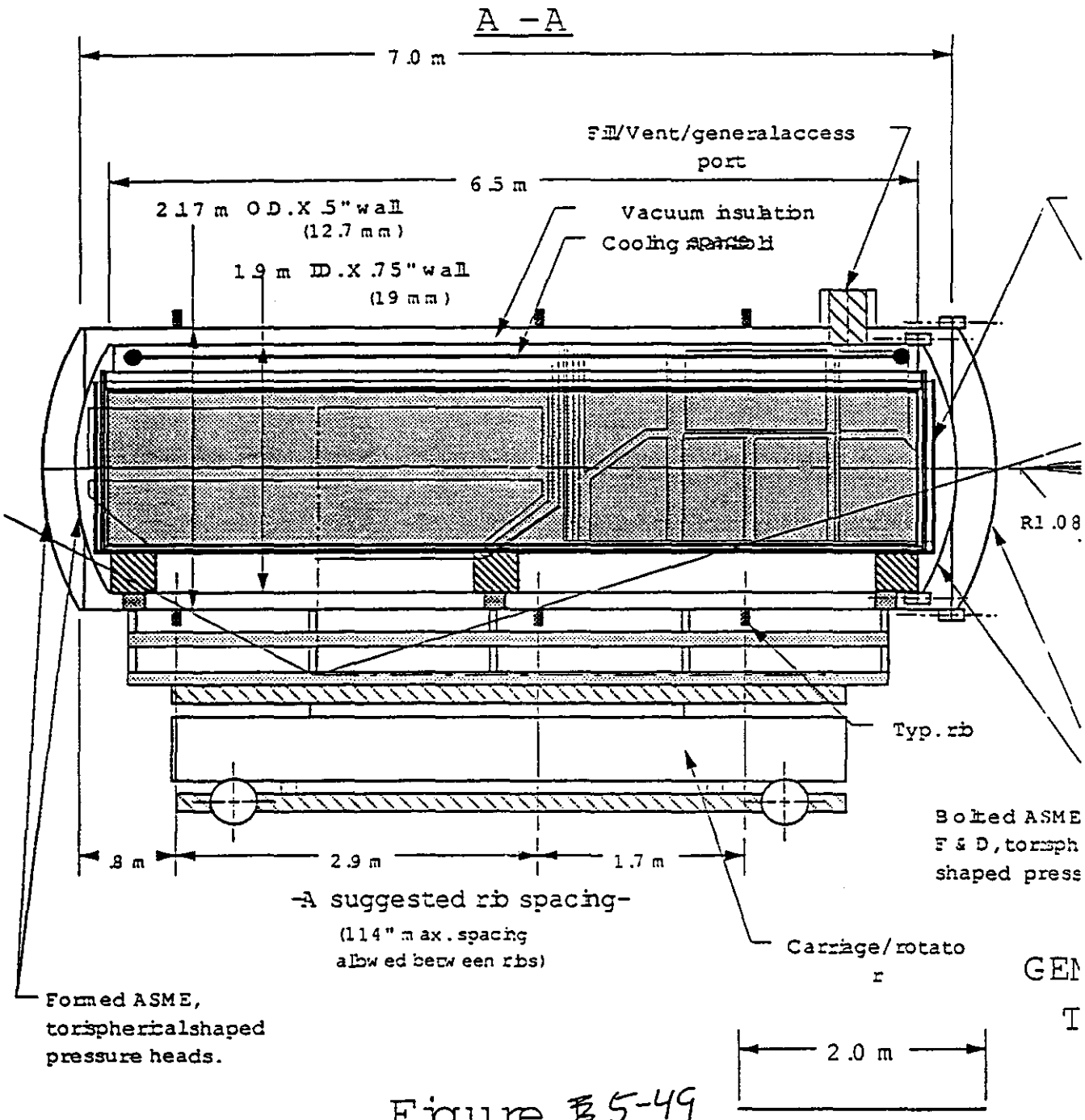
A -A
7.0 m
Fill/Vent/generalaccess port
6.5 m
2.17 m O.D.X .5" wall (12.7 mm)
Vacuum insulation
Cooling shield
1.9 m I.D.X .75" wall (19 mm)
R1.08
Typ. rib
Bolted ASME F & D, torisph shaped press
.8 m
2.9 m
1.7 m
-A suggested rib spacing-
(114" max. spacing allowed between ribs)
Carriage/rotator
Formed ASME, torispherical shaped pressure heads.
2.0 m

Figure 5-49

5-50

Figure 7 *GEM Liquid Calorimetry Cost Model Flow Diagram*

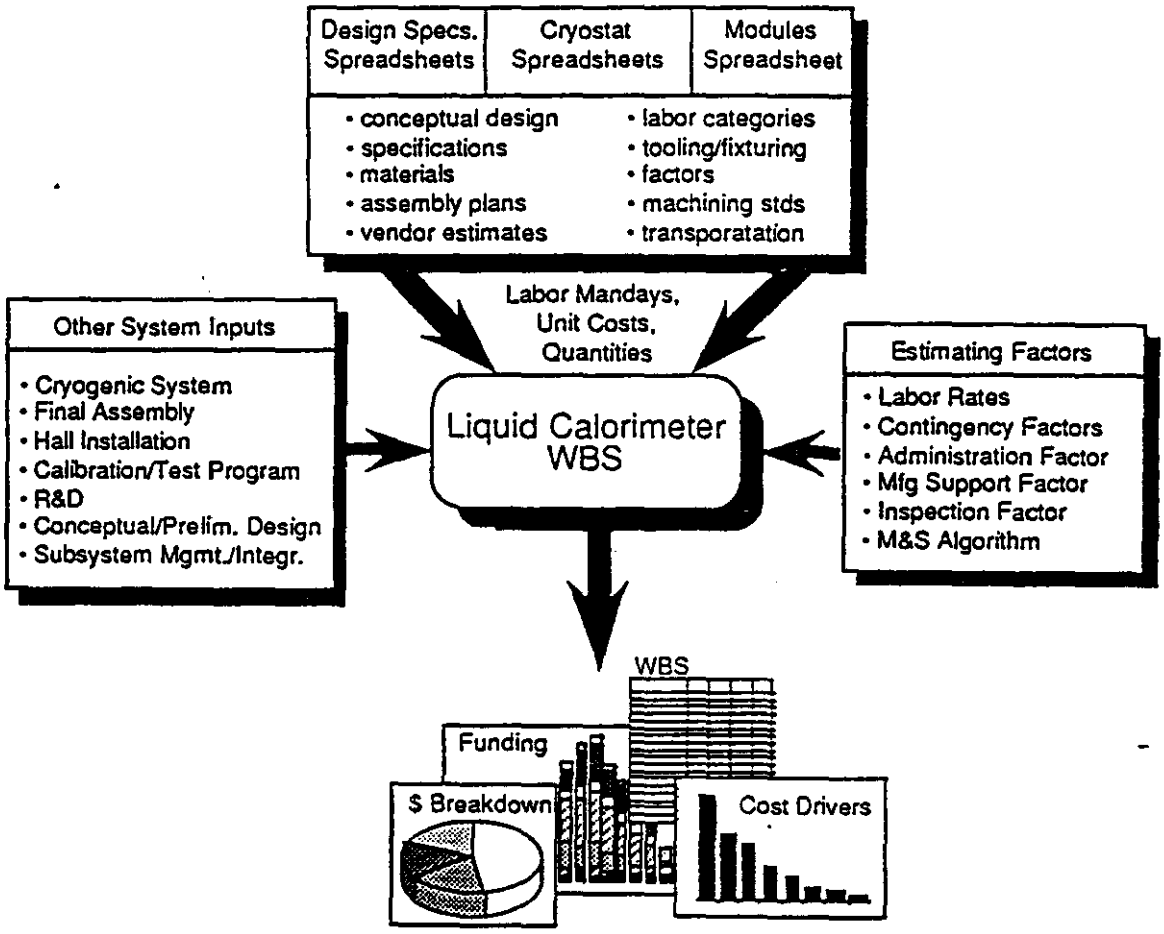

gem

γeμ

Presentation by:

C. Baltay

Presentation to the Collab. Council
Meeting March 18, 1993
C. Baltay

GEM TECHNICAL DESIGN REPORT

THE GEM CENTRAL TRACKER

THIRD DRAFT

March 1993

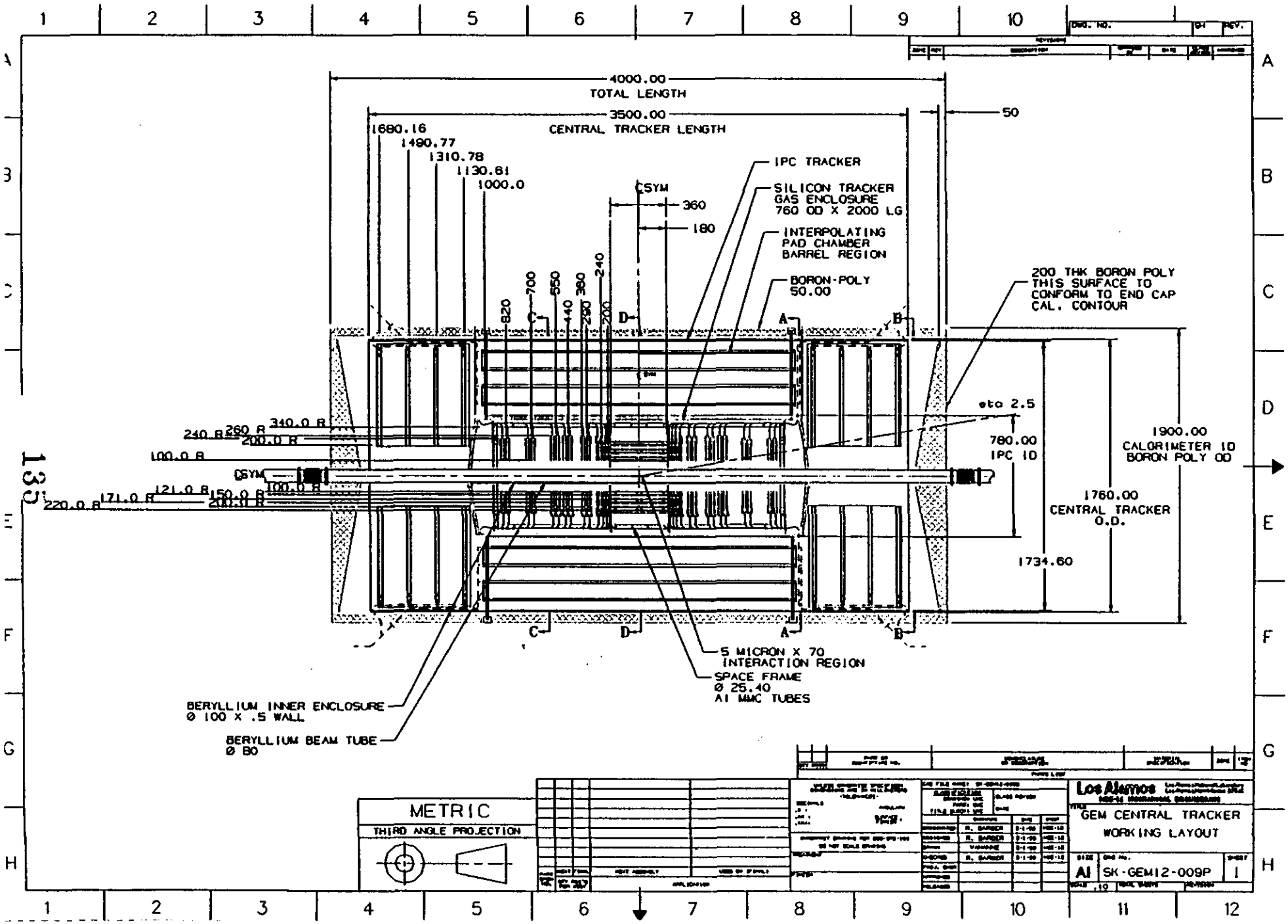
4000.00
TOTAL LENGTH
3500.00
CENTRAL TRACKER LENGTH
50
1680.16
1490.77
1310.78
1130.81
1000.0
CSYM
360
180
IPC TRACKER
SILICON TRACKER
GAS ENCLOSURE
760 OD X 2000 LG
INTERPOLATING
PAD CHAMBER
BARREL REGION
BORON-POLY
50.00
200 THK BORON POLY
THIS SURFACE TO
CONFORM TO END CAP
CAL. CONTOUR
820
700
550
440
380
290
240
200
eta 2.5
780.00
IPC ID
1900.00
CALORIMETER ID
BORON POLY OD
1760.00
CENTRAL TRACKER
O.D.
1734.60
340.0 R
260 R
240 R
200.0 R
100.0 R
CSYM
100.0 R
121.0 R
150.0 R
171.0 R
220.0 R
200.0 R
5 MICRON X 70
INTERACTION REGION
SPACE FRAME
Ø 25.40
Al MMC TUBES
BERYLLIUM INNER ENCLOSURE
Ø 100 X .5 WALL
BERYLLIUM BEAM TUBE
Ø 80
METRIC
THIRD ANGLE PROJECTION
Los Alamos
GEM CENTRAL TRACKER
WORKING LAYOUT
A1
SK-GEM12-009P
1

Central Tracker Editorial Committee

* C Baltay
* Kate Morgan
  Jim Brau
  Shawn McKee
  Dave Lee
  Tim Thompson
  Sangkoo Hahn
  Jim Hussar
  Will Emmet

Coordination of Figures

Overall Assembly of C.T. chapter

Contents

6.1. Introduction C. Bahay ..... 1 8 pages

6.1.1. Physics Goals of the Central Tracker 1

6.1.2. Design Considerations 2

6.1.3. Detector Configuration 3

6.1.4. Performance Parameters 4

6.2. Detector Simulation and Performance J. Brau, S. McKee ..... 9 20 p.

6.2.1. Tracker Parameters 9

6.2.1.1. Position Resolutions 9

6.2.1.2. Material Thickness 9

6.2.1.3. Occupancy 12

6.2.2. Tracker Intrinsic Performance 12

6.2.2.1. Detector Resolutions 12

6.2.2.2. Pattern Recognition 14

6.2.2.3. Multitrack Resolution 15

6.2.3. Physics Performance 17

6.2.3.1. Electron/Gamma ID 17

6.2.3.2. Electron/Hadron Separation 18

6.2.3.3. Muon I.D. 18

6.2.3.4. Tau Identification 18

6.2.3.5. Vertex Location 19

6.2.3.6. Help with Isolation Cuts 21

6.2.3.7. Secondary Vertex (b-tagging) 21

6.2.3.8. Charge Sign Determination for Electrons 21

6.2.4. Alignment and Calibration 22

6.3. The Silicon Detector ..... 28 22 p.

6.3.1. Design Considerations D. Lee, J. Brau 28

6.3.1.1. Design Parameters 28

6.3.1.2. Choice of Silicon Microstrip for Inner Tracker 28

6.3.1.3. Microstrip Response 29

6.3.1.4. Strip Length Considerations 31

6.3.2. Silicon Tracking System Mechanical Design T. Thompson 32

6.3.2.1. Material Considerations 34

6.3.2.2. Silicon Ladder Assembly 35

6.3.2.3. Gas Enclosures and Kinematic Supports 36

6.3.2.4. Space Frame 37

6.3.2.5. Central Region 37

6.3.2.6. Forward Region 39

6.3.2.7. Cooling System 40

6.3.2.8. Silicon Alignment and Detector Monitoring Systems 41

6.3.2.9. Power and Signal Cable Distribution 43

6.3.3. Electronics S. Hahn 44

6.4. The IPC Detector ..... 52 22 p.

6.4.1. Design Considerations J. Husser 52

6.4.1.1. Interpolating Pad Chambers 52

6.4.1.2. Geometrical Charge Division 52

6.4.1.3. Design Parameters 54

6.4.1.4. Chamber Geometry 54

6.4.1.5. Occupancy 55

6.4.1.6. Position Resolution 56

6.4.1.7. Rate Effects 57

6.4.2. Mechanical Design ..... W. Emmet 59

6.4.2.1. Introduction 59

6.4.2.2. Interpolating Pad Chamber Design Parameters 59

6.4.2.3. IPC Tracker Design Constraints 60

6.4.2.4. Description of IPC Tracker Array 60

6.4.2.5. IPC Module Design 61

6.4.2.6. Radiation Length Budget 62

6.4.2.7. Barrel Support Structure .....

6.4.2.8. Endcap IPC Support Structure .....

6.4.2.9. IPC Detector Gas System .....

6.4.2.10. IPC Detector Electronics Cooling System .....

6.4.2.11. IPC Tracker Assembly and Installation 65

6.4.2.12. Alignment 65

6.4.3. IPC Readout Electronics ..... J. Musser 66

6.5. Integration into GEM ..... K. Morgan ..... 76 4 p

6.5.1. Installation and Alignment 76

6.5.2. Services and Connections 77

6.5.3. Access 78

6.5.4. Surface Facilities 78

6.5.5. Safety and Environmental Impact .....

6.6. Radiation Environment ..... 80 5 p.

6.6.1. Radiation Dose Due to Charged Particles ..... C. Baltay 80

6.6.2. Neutral Particle Backgrounds ..... D. Lee 82

6.6.2.1. Neutral Particle Fluences 82

6.6.2.2. Backgrounds from neutral particle backgrounds 83

6.6.2.3. Activation of components in or near the Central Volume 83

6.6.3. Lifetime Expectancy of the Central Tracker ..... C. Baltay 85

6.7. R & D Program ..... 86 6 p.

6.7.1. Silicon R & D ..... D. Lee 86

6.7.1.1. SiliconWafer R&D 86

6.7.1.2. Mechanical Engineering R&D 86

6.7.1.3. Electronic Engineering R&D 87

6.7.2. IPC R&D Program ..... J. Musser 89

6.7.2.1. Chamber Development 89

6.7.2.2. Electronics 89

6.7.2.3 IPC Electronics 89

6.7.3. Test Beam Plans ..... K. Morgan 90

6.7.3.1. Silicon Detectors 90

6.7.3.2. Interpolating Pad Chambers 90

6.8. Organization & Management ..... C. Baltay ..... 92 2 p.

6.8.1. The Central Tracker Group 92

6.8.2. Personal and Institutional Responsibilities 93

6.9. Schedules ..... C. Baltay ..... 96 6 p.

~95 pages

Areas of Concern

6.2.3 Physics Performance

We have worked hard to get this section to where it is, but it is still not what we would like it to be. We will keep improving it to the last minute. We will also keep at it until May PAC Review to have results as complete as possible.

6.7. R&D Program

Do we have enough detail here? We could include more detailed milestones etc. but this would take more space.

Figures: Some of the Figures need more work, and we are still missing some Fig. captions.

Areas of Overlap with other Chapters

1. We kept engineering detail to a minimum. We will give the updated "Central Tracker Progress Report", which contains much more detail, to the Central Tracker Subcommittee of the PAC before May review.
2. Should check for overlap and consistency between Sect 6.2.3 PHYSICS PERFORMANCE and Physics Chapter
3. Kept discussion of electronics very short — detailed discussion is in Chapter on Electronics.
4. Discussion of "Radiation Environment" (section 6.6) is a short summary. Detailed discussion and Figures are in chapter on Radiation doses.
5. Need to check consistency of IPC's with CSC's of muon system. For example
   - cathode plane materials
   - two track resolution

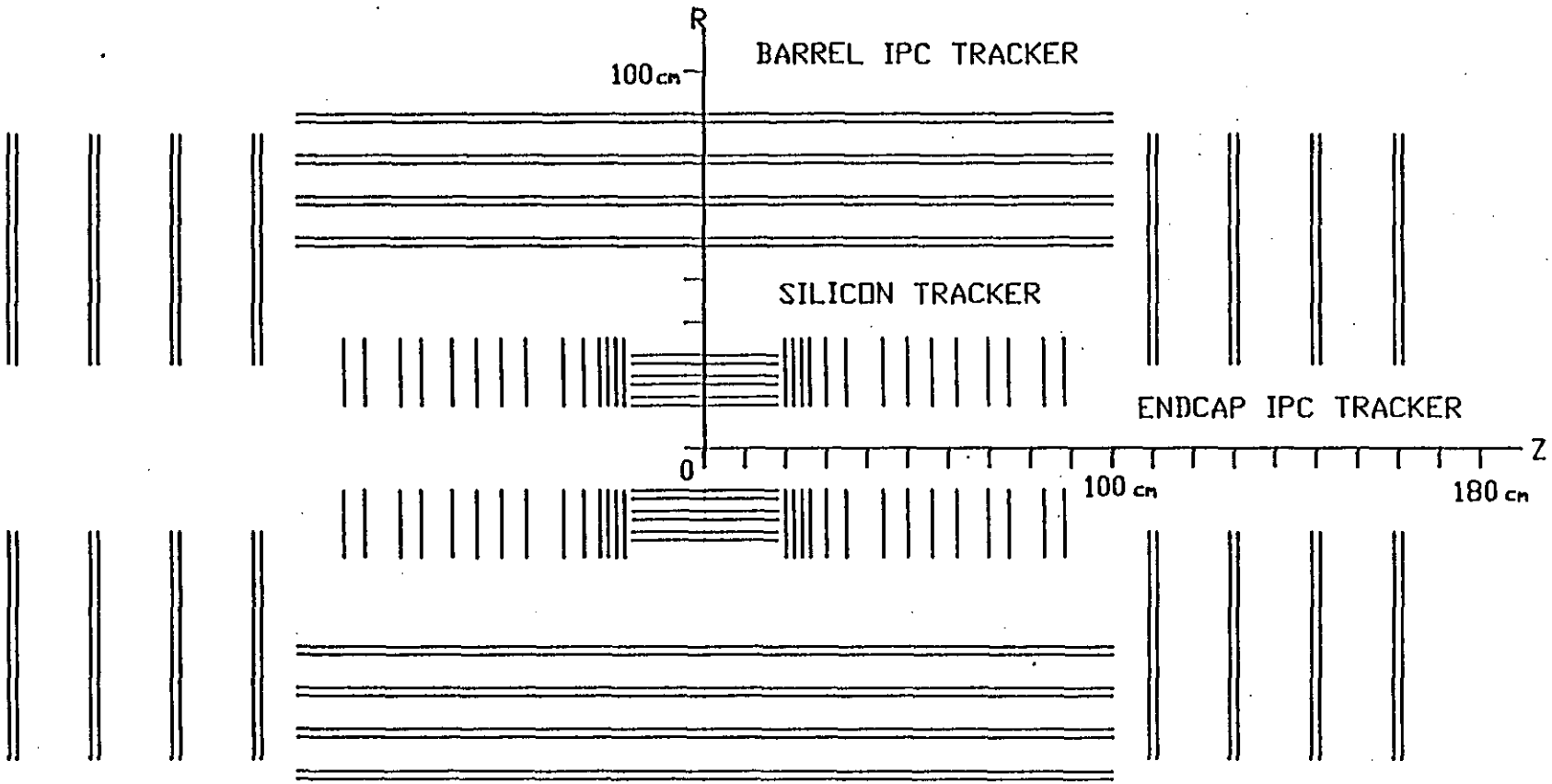

GEM CENTRAL TRACKER

GEM CENTRAL TRACKER

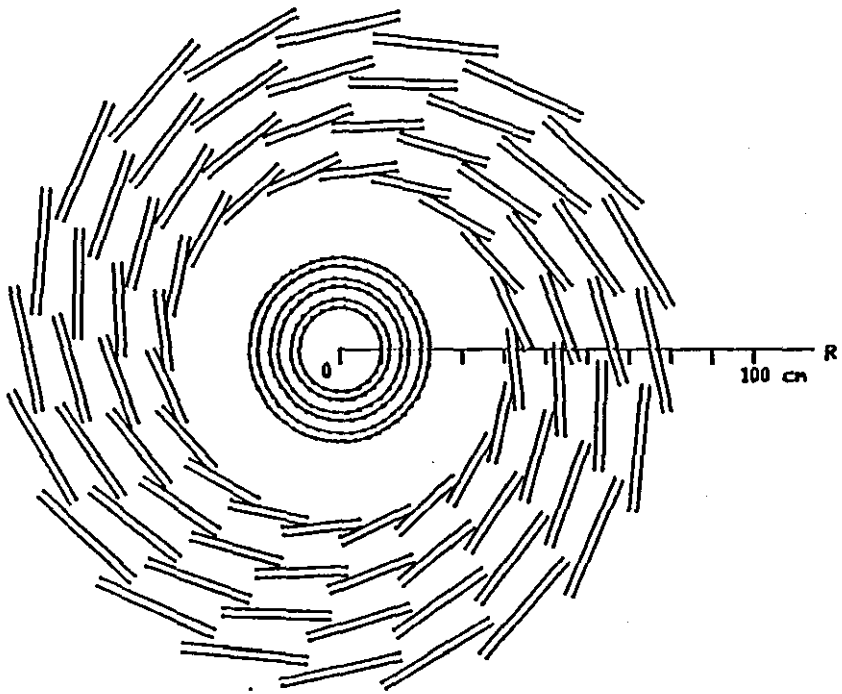

SECTION AT 90°

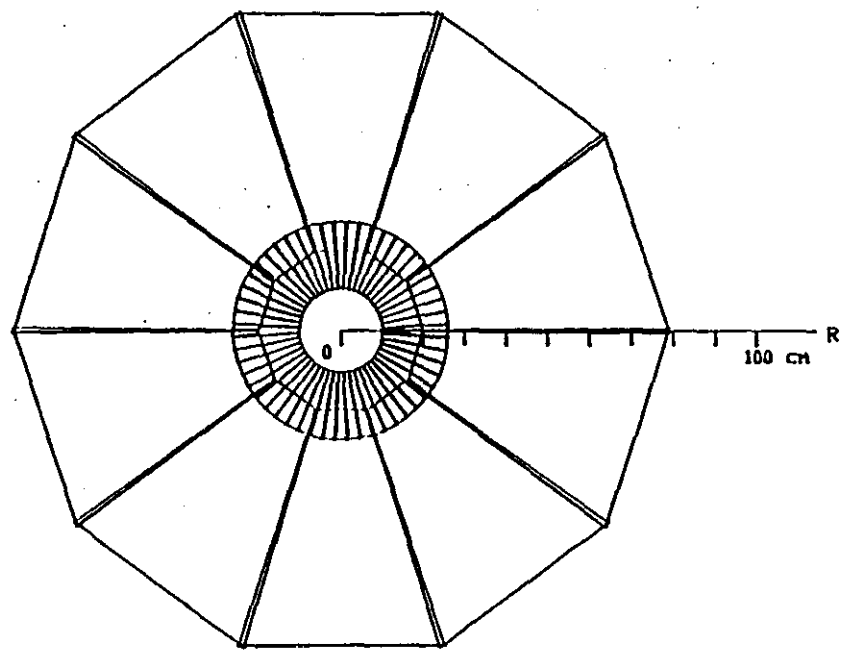

VIEW IN Z DIRECTION

GEM CENTRAL TRACKER

INTERPOLATING PAD CHAMBERS

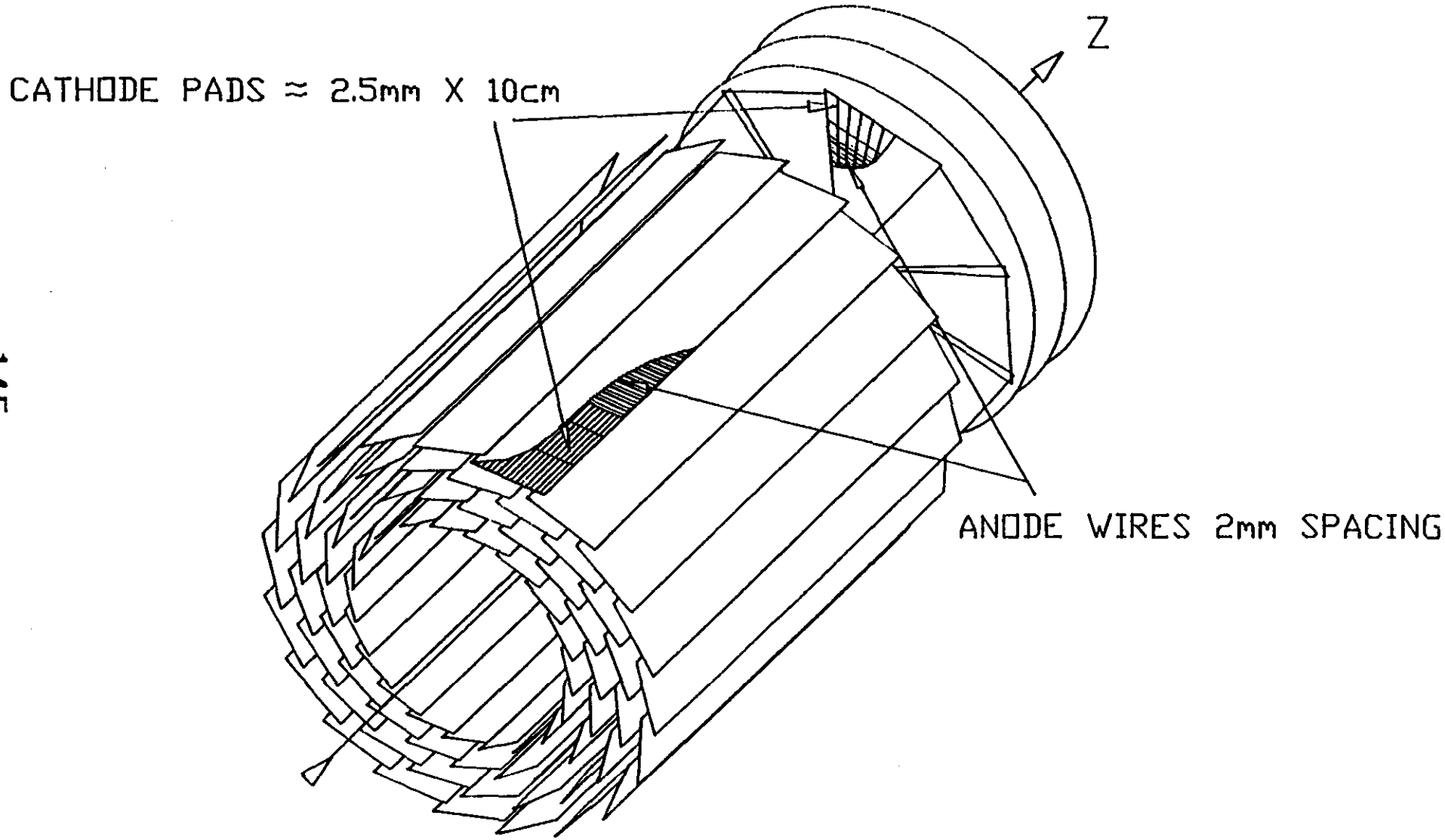

6.1. INTRODUCTION

6.1.1. Physics Goals of the Central Tracker

The physics goals for the central tracking in GEM can be divided into two categories. The first are those features that are required to support the primary objectives of GEM, namely the detection of gammas, electrons and muons at high p_t. Some examples of these are:

- Identify the primary vertex of an event of interest, so that it can be separated from other pileup events in the memory time of the detector.
- Separate electrons and gammas using the presence or absence of a charged track pointing to an electromagnetic shower in the calorimeter.
- Provide track information for e, μ or γ isolation cuts, and to help with rejection of conversions and Dalitz pairs.
- Help with electron-hadron separation by providing a momentum measurement that can be compared with the energy deposition in the calorimeter.
- Separation of close together multi-charged particle tracks from single charged particle tracks which will be useful in tagging tau decays and γ conversions.
- Help with rejection of background by matching the muon momentum measured in the central tracker with the momentum measured in the muon chambers.
- Determine the electron sign up to ~600 GeV/c.

The tracker should be able to fulfull these goals well at the design luminosity of $10^{33}cm^{-2}s^{-1}$. These capabilities should also survive to luminosities up to $10^{34}cm^{-2}s^{-1}$. These minumum goals do not require full pattern recognition, but can be met by looking for hits in the tracker in a specific road extrapolated from the calorimeter or the muon system.

The second category of physics goals are more ambitious:

- Full reconstruction of the charged tracks in the event.
- Secondary vertex finding.
- Tracking at low momenta with good resolution.

These features would enhance GEM's ability to address issues such as b and top physics. They are more demanding in that they require pattern recognition capabilities and very good vertex resolution. It is expected that these more ambitious goals can be met at luminosities up to

Table 6.1.1.
Design Parameters for the Central Tracker

Outer Radius	90 cm
Length	350 cm
Rapidity Coverage	$\lvert\eta\rvert \leq 2.5$
Magnetic Field	0.8 T
Occupancy	
at $L = 10^{33}\,cm^{-2}sec^{-1}$	$\leq 1\%$
at $L = 10^{34}\,cm^{-2}sec^{-1}$	$\leq 10\%$
Charge separation at 95% c.l.	$p \leq 600 GeV/c$
Momentum Resolution	$\Delta p / p^2 \sim (1.2) \times$
at high momenta (measurement limited)	$10^{-3}\ (GeV/c)^{-1}$
at low momenta (multiple scattering limited)	$\Delta p / p \sim 3.5\%$
Vertex Resolution	
along beam direction	$\delta z \sim 1$ mm
impact parameter	$\delta b \sim 25\ \mu m$ above 10 GeV/c

Table 6.1.2.
Chamber resolutions and alignment stabilities assumed in the simulations

Silicon microstrips resolution/layer	10 μm
Silicon alignment stability	10 μm
Pad chamber resolution	50 μm
Pad chamber alignment stability	25 μm

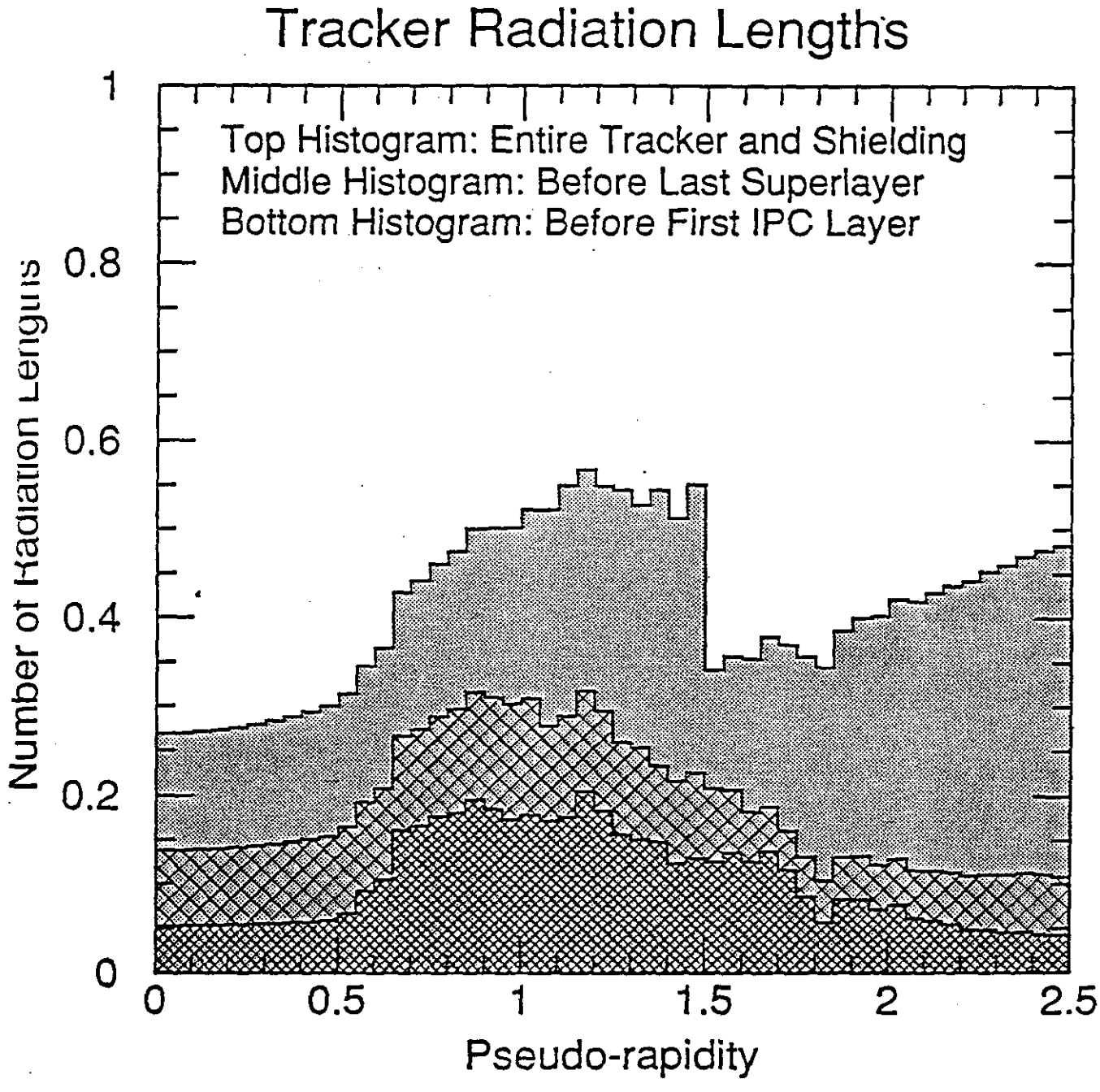
Tracker Radiation Lengths
Top Histogram: Entire Tracker and Shielding
Middle Histogram: Before Last Superlayer
Bottom Histogram: Before First IPC Layer
Number of Radiation Lengths
0
0.2
0.4
0.6
0.8
1
0
0.5
1
1.5
2
2.5
Pseudo-rapidity

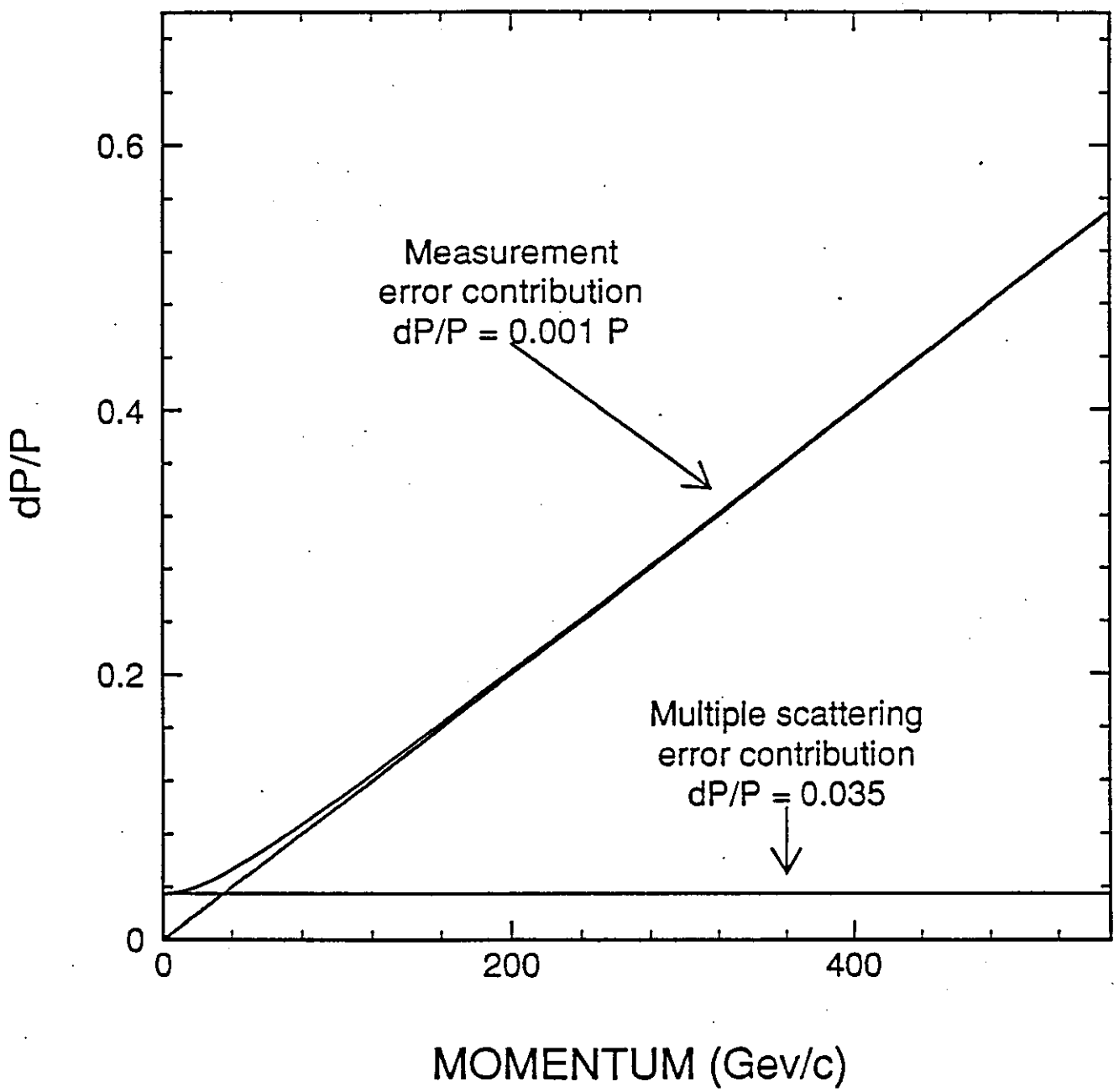
0.6
0.4
0.2
0
dP/P
Measurement
error contribution
dP/P = 0.001 P
Multiple scattering
error contribution
dP/P = 0.035
0
200
400
MOMENTUM (Gev/c)

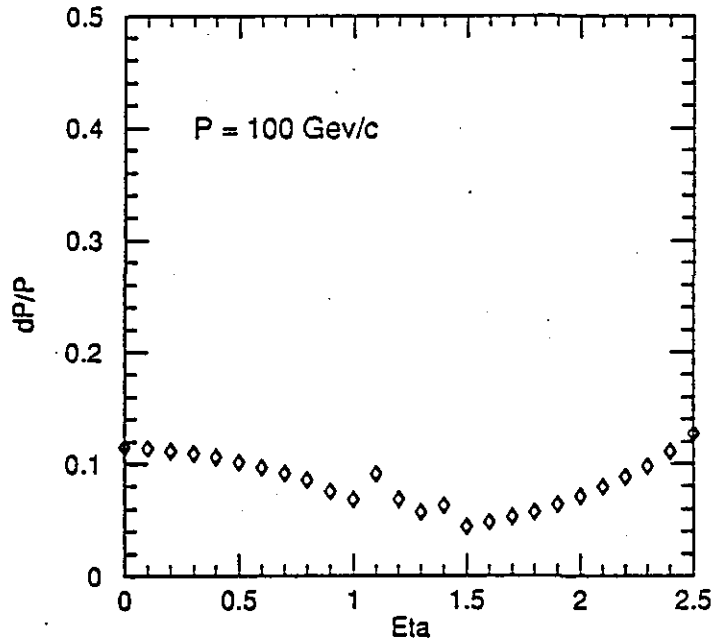
P = 100 Gev/c
dP/P
Eta
0
0.1
0.2
0.3
0.4
0.5
0
0.5
1
1.5
2
2.5

Charge Separation at 95% Conf. Level

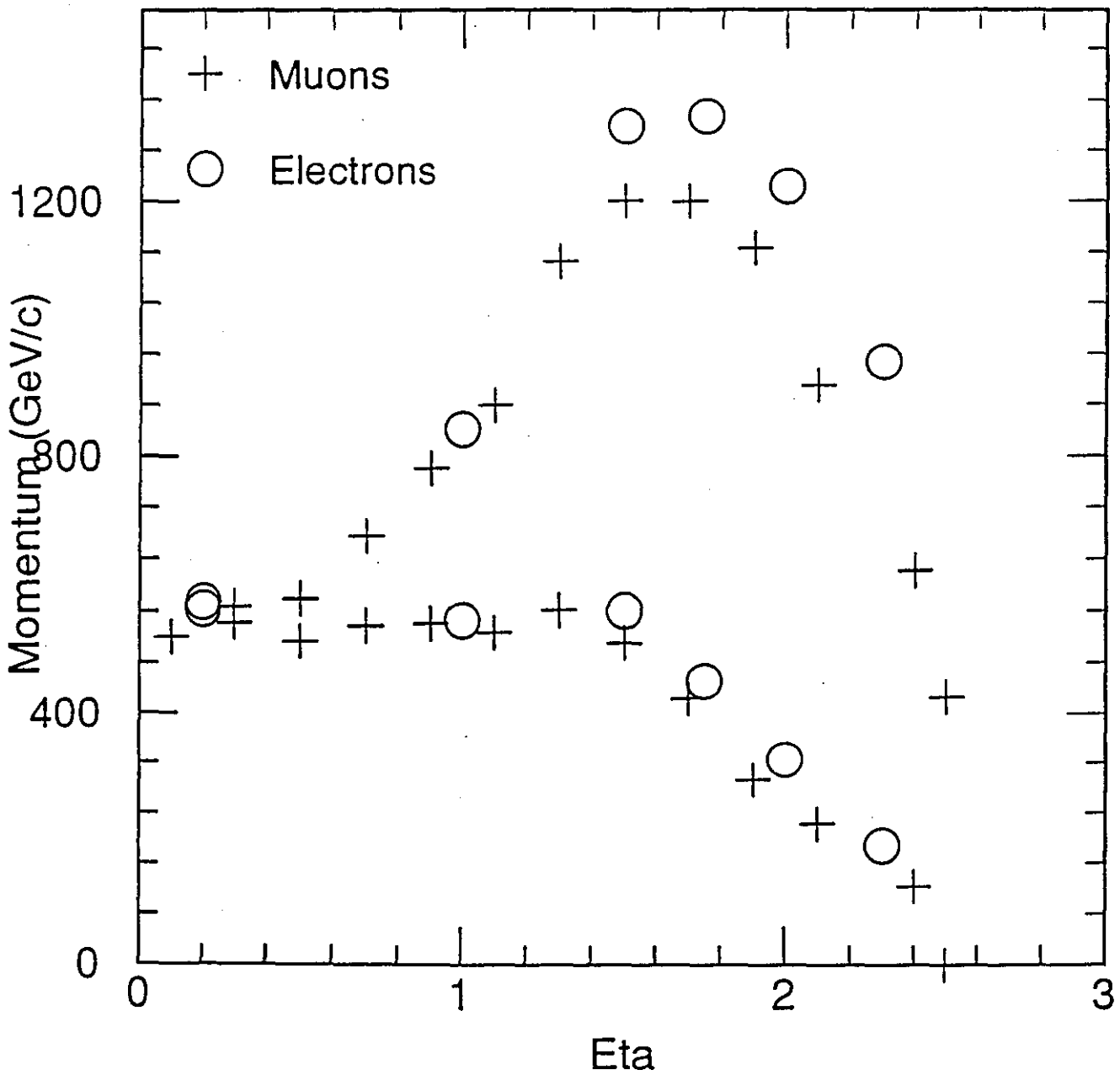

W – W Scattering

$$p + p \rightarrow W + W + X \rightarrow \ell^{\pm} \ell^{\pm} X$$

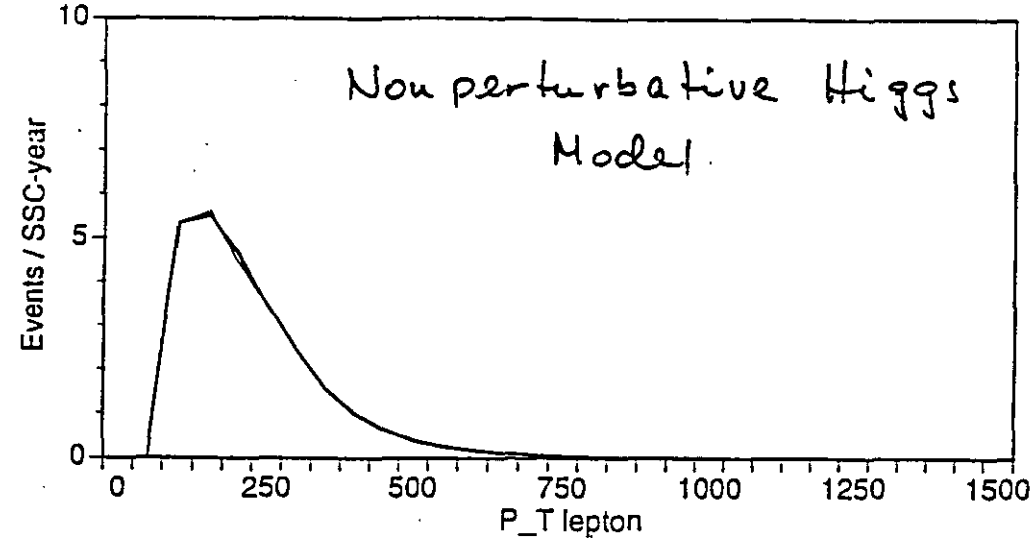

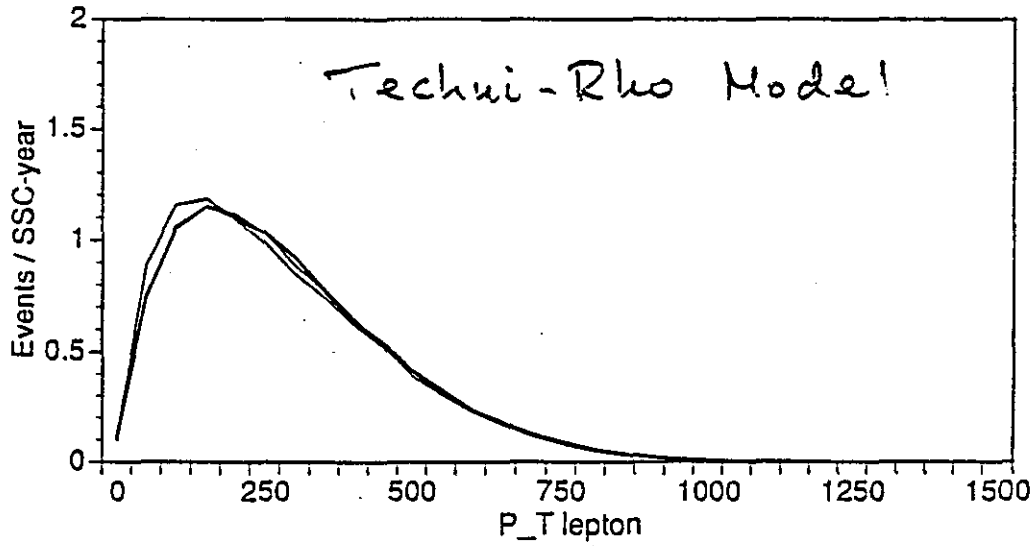

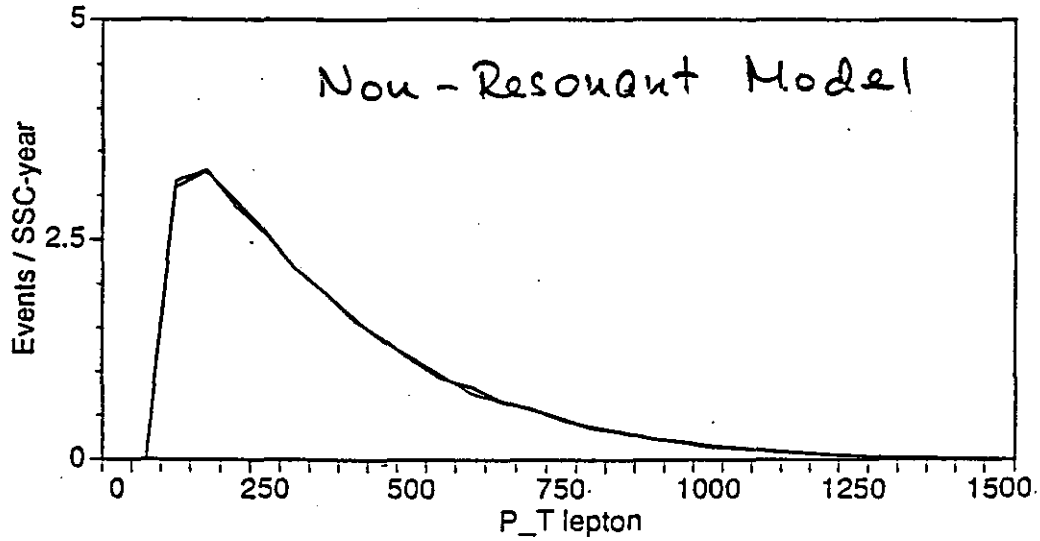

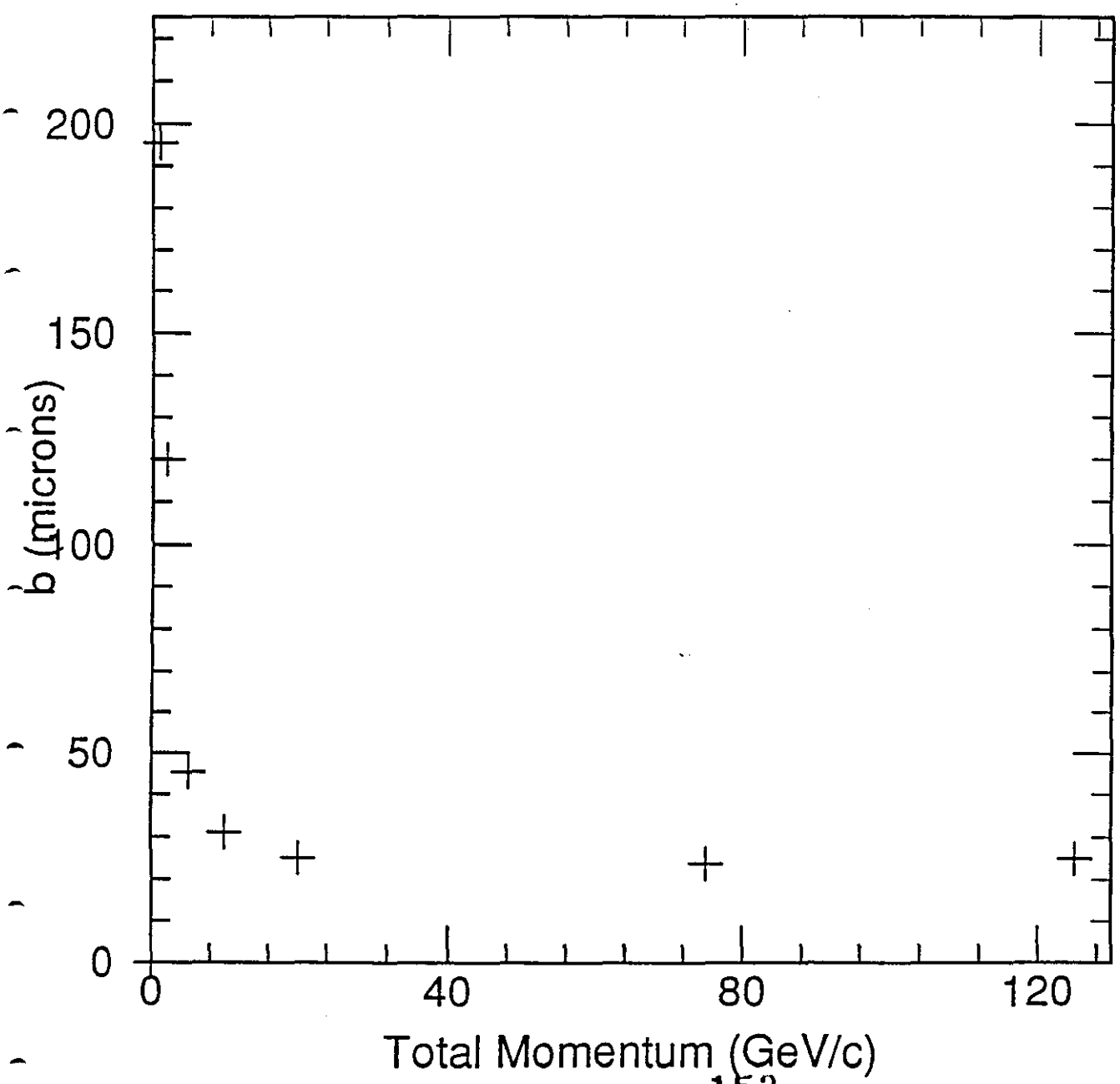
200
150
100
50
0
b (microns)
0
40
80
120
Total Momentum (GeV/c)

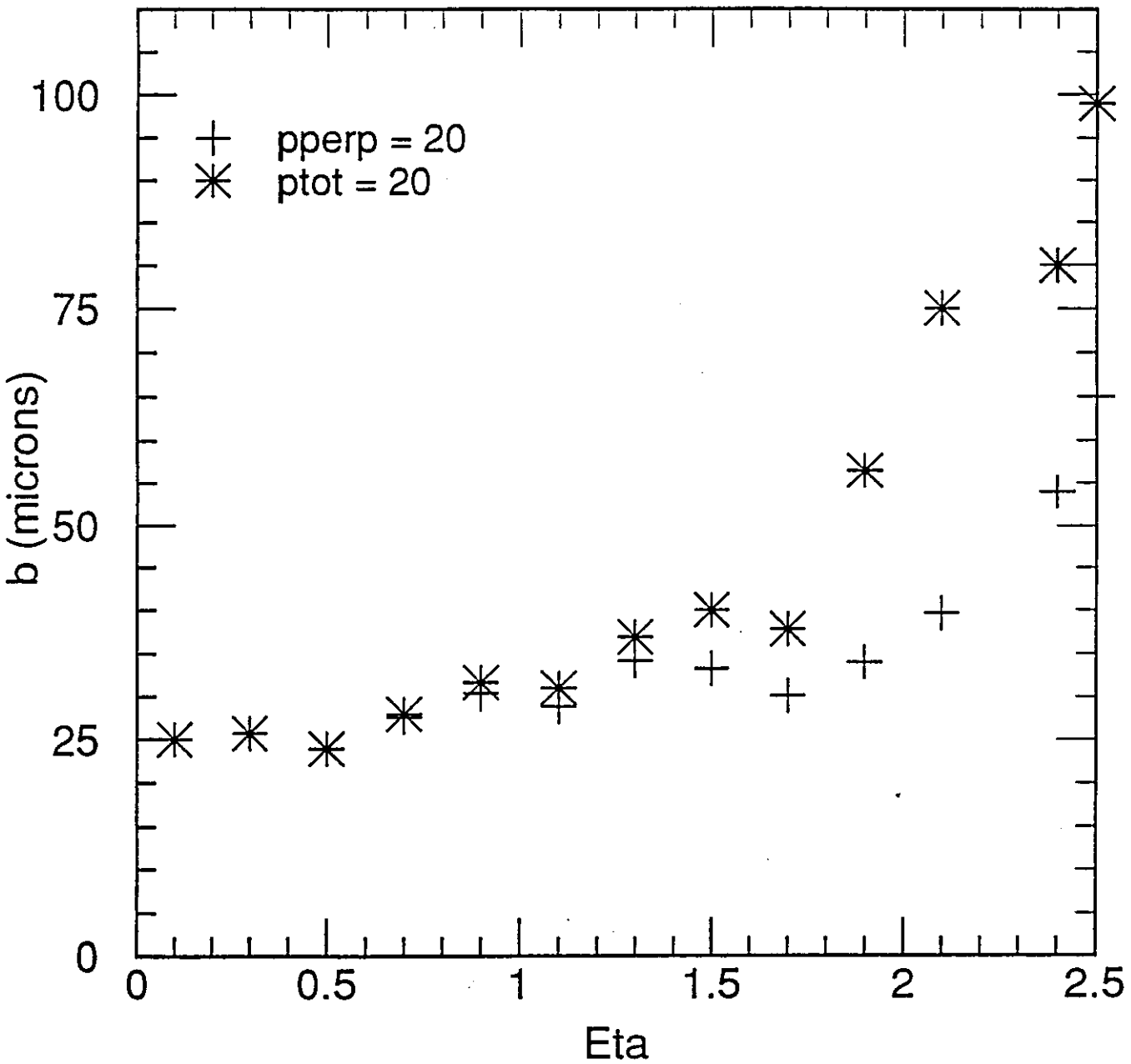
pperp = 20
ptot = 20
b (microns)
Eta
0
25
50
75
100
0
0.5
1
1.5
2
2.5

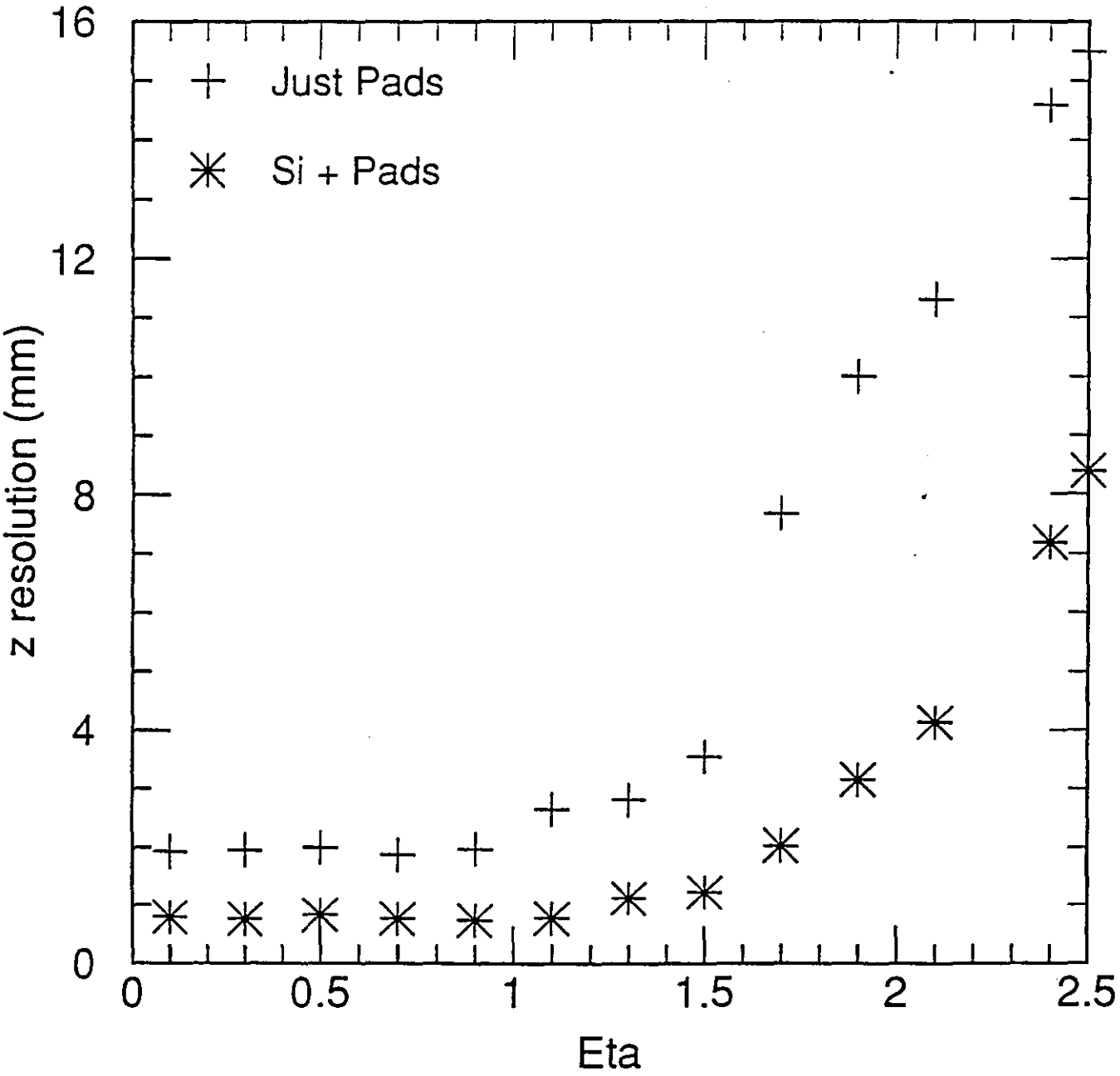
Just Pads
Si + Pads
z resolution (mm)
Eta
0
4
8
12
16
0
0.5
1
1.5
2
2.5

gem

γeμ

Presentation by:

M. Shaevitz

M Shaevitz

TABLE OF CONTENTS FOR ELECTRONICS CHAPTER 7

7. ELECTRONICS

		Author	Original	Text	# of Figs.
7.1	**Introduction and Overview**	M. Shaevitz	8	6	2
7.2	**Triggering**				
7.2.1	Overview of Trigger System	E. Prebys	1	1	0
7.2.2	Level 1 Trigger				
7.2.2.1	Calorimeter	B. Cleland	5	6	3
	Digital Proc. Option	D. Crosetto	2	2	2
7.2.2.2	Muons	M. Atiya	5	6	12
7.2.2.3	Global	E. Prebys	2	2	1
7.2.3	Level 2 Trigger Strategies	H. Uijterwaal	2	3	0
7.2.4	Rates/Efficiencies of Level 1	H. Uijterwaal	5	6	2
7.3	**DAQ, Level 2 Arch., Event Bldg**	M. Bowden	10	9	1
7.3.1	Introduction				
7.3.2	Data Collection				
7.3.3	Event Data Collection Modules				
7.3.4	Event Building				
7.3.5	Event Data Distribution Modules				
7.3.6	Level 2 Trigger				
7.3.7	Level 3 Trigger and Mass Storage				
7.3.8	Control Network				
7.3.9	Partitioning				
7.3.10	Scalability				
7.3.11	DAQ Software				
7.4	**Front-end Electronics**				
7.4.1	Si-VTX Central Tracker	G. Mills	10	14	5
7.4.2	IPC Central Tracker	J. Musser	10	8	11
7.4.3	Calorimeter	J. Parsons	10	10	5
7.4.4	Muon System	D. Marlow	10	14	22
7.5	**Integration Issues**		10		
7.5.1	Fiber Optic Links			2	0
7.5.2	Electronics Rack Design			1	1
7.5.3	Electronics Rack Placement and Services			2	4
			90	92	71

$92 + \frac{71}{2} = 127$

GEM TDR: Chap. 7 Figures

(Original Section Layout)

Figure 7.1-1 Block diagram of the GEM triggering and data acquisition system.
Person: N.Lau **Format: ?**

- Figure 7.1-2 Schematic depiction of the Level 1 and Level 2 muon trigger algorithms.
Person: M.Seman **Format: EPS**

- Figure 7.2.1-1 Silicon Tracker MCM Unit
- Figure 7.2.1-2 Silicon Tracker Amplifier and Comparator Design
- Figure 7.2.1-3 Silicon Tracker Amplifier Response
- Figure 7.2.1-4 Digital Architecture Design
- Figure 7.2.1-5 Silicon Tracker CMOS-1 Data Driven Memory
Person: G. Mills **Format: EPS**

- Figure 7.2.2-1 IPC Electronics Archetecture
- Figure 7.2.2-2 IPC Electronics Layout
- Figure 7.2.2-3 Pre-amplifier Design
- Figure 7.2.2-4 Preamplier Noise Measurements
- Figure 7.2.2-5 Amplifier Layout
- Figure 7.2.2-6 Voltage Write/Charge Read SCA Cell
- Figure 7.2.2-7 Voltage Write/Voltage Read SCA Cell
- Figure 7.2.2-8 Address Decoding Circuit
- Figure 7.2.2-9 BSIM SCA Post-Rad Model
- Figure 7.2.2-10 Readout Controller
- Figure 7.2.2-11 IPC Electronics R&D Timeline
Person: J.Musser **Format: EPS**

- Figure 7.2.3-1 Schematic depicting the calorimeter readout chain.
- Figure 7.2.3-2 Schematic drawing of a Calorimeter Readout Module (CRM) using analog pipelines.
- Figure 7.2.3-3 Schematic of the 40 ns hybrid shaper and gain control used in the 1992 LAr/LKr beam tests.
- Figure 7.2.3.-4 Schematic drawing of a switched-capacitor analog memory with simultaneous Read and Write operations.
- Figure 7.2.3-5 Schematic drawing of a Calorimeter Readout Module (CRM) using digital pipelines.
Person: J.Parsons **Format:?**

- Figure 7.2.4-1 Schematic representation of the layer of the readout, trigger, and DAQ system for the CSC's.
- Figure 7.2.4-2 Physical Layout of the CSC front end printed circuit board.
- Figure 7.2.4-3 Block Diagram of the SCA version of the CSC readout board.

• = Available in some form.

.....

.....

- Figure 7.2.4-14 Block diagram of the timing discriminator circuit and typical waveforms.

.....

- Figure 7.2.4-18 Schematic layout of the switched capacitor array sampler.

.....

- Figure 7.2.4-21 Interface of the Anode Electronics with the CSC Readout Path
- Figure 7.2.4-22 Block Diagram of Anode Signal Processing

Person: D. Marlow **Format: ?**

- Figure 7.3.2.1-1 Geometrical configuration of the trigger sums.
- Figure 7.3.2.1-2 Illustration of Level 1 isolation requirement.
- Figure 7.3.2.1-3 Diagram illustrating the edge counting technique.

Person: B.Cleland **Format: EPS**

Figure 7.3.2.2-1 Charged particle rate in the three muon Superlayers. Shown are the totals and the direct, decay and punch-through rate.

Figure 7.3.2.2-2 The $\delta\phi$ method and the sagitta method for muon triggers.

Figure 7.3.2.2-3 The trigger rate in the barrel and endcap as a function of the difference of the number of strips for the $\delta\phi$ method.

Figure 7.3.2.2-4 Trigger turn-on curves for the $\delta\phi$ method.

Figure 7.3.2.2-5 Trigger rate and efficiency for various desired pt cuts.

Figure 7.3.2.2-6 Fake muon level 1 trigger as a function of neutron rate.

Figure 7.3.2.2-7 Time distribution of first arrival signals used to tag the beam crossing.

- Figure 7.3.2.2-8 Configuration for local trigger generation in the barrel and endcap.
- Figure 7.3.2.2-9 Local trigger segment encoding.
- Figure 7.3.2.2-10 3 superlayer trigger formation using Associative , or content-addressable, Memory.

Figure 7.3.2.2-11 The number of clocks necessary to form a trigger using the CAM scheme. Each clock cycle will be less than 50 nsec.

Figure 7.3.2.2-12 The efficiency for accepting a 10 and 30 GeV/c pt muon. Also shown is the background trigger rate.

Person: M.Atiya **Format: EPS**

- Figure 7.3.2.3-1 Level 1 Global Trigger Logic

Person: E.Prebys **Format: EPS**

- Figure 7.3.4-1 Efficiecy of the E_8 e/γ-trigger for electrons with a P_T of 50 GeV (left hand plot) and the H_8 jet trigger for jets with a P_T of 100 GeV (right hand plot).
- Figure 7.3.4-2 Number of accepted events by each of the 12 trigger modes from table 7.3.4.-1 for $H^0 \rightarrow \gamma,\gamma$ (m_{H^0}=110 GeV) (left hand plot) and minimum bias (right hand plot) events.

Person: H.Uijterwaal **Format: EPS**

- Figure 7.4-1 Overview of the GEM DAQ system
  Person: J.Dorenbosch **Format:EPS**

Figure 7.5.2-1 Standard Electronics Rack Design
Person: K.Freeman **Format:?**

Figure 7.5.3-1 Electronics Platform Placement on West Wall of Experimental Hall
Figure 7.5.3-2 Electronics Platform Side View with Integrated Services
Figure 7.5.3-3 Electronics Platform Plan View
Figure 7.5.3-4 Electronics Room Rack Locations
Person: K.Freeman **Format: ?**

Status of Electronics Chap. 7

- **Drafts of all sections submitted and collated.**
  - Need to pull sections together for consistency.

- **Some sections need more details, less subjective arguments**
  - Trigger section needs primitive/hit rates and more on physics efficiency.
  - DAQ section needs more quantitative backup for claims.

- **Some specific points needing attention.**
  - Operation in magnetic field discussion in electronics or elsewhere
  - Muon front-end and trigger sections need to be condensed.
  - Need more simulation results for trigger efficiencies and rates.
  - Introduction/overview needs to be expanded.

- **Unresolved issues**
  - Level 1 trigger latency (= 2 μsec ?) and effects on subsystem storage times.
  - Is the "Virtual Level 2" concept defensible?
  - Should we keep the "Digital Level 1" option for the calorimeter trigger ?

GEM DAQ ARCHITECTURE

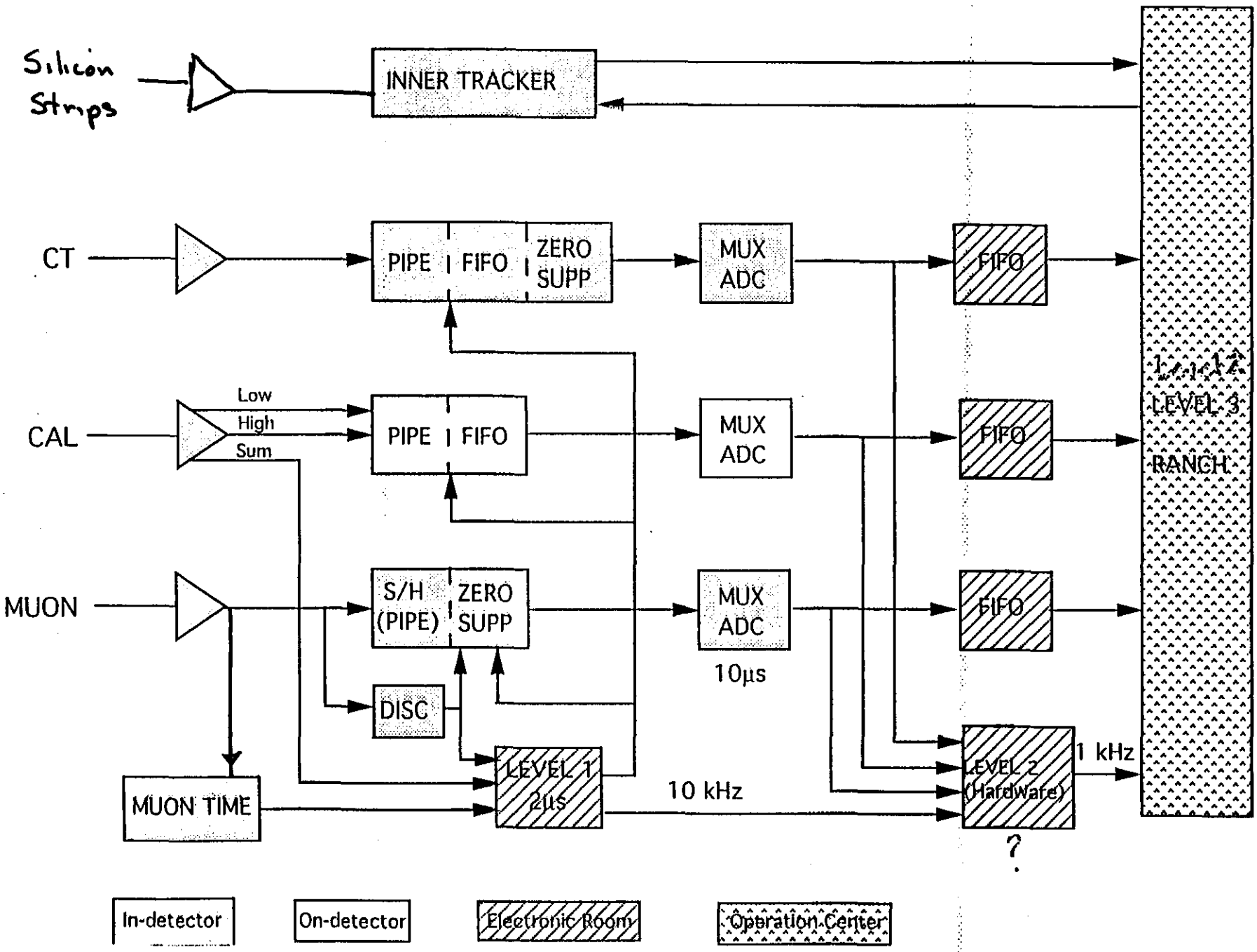

GEM DAQ System

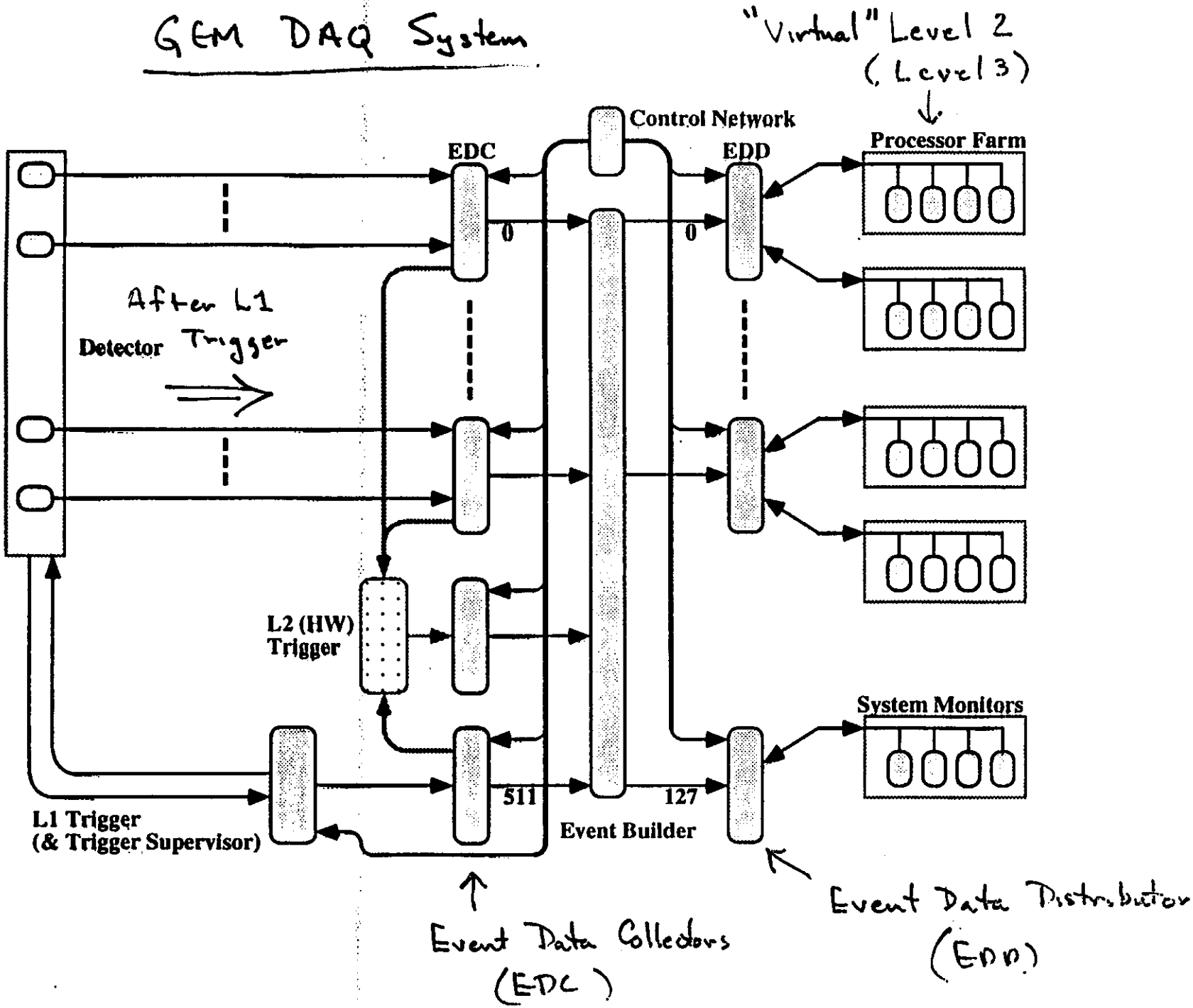

TRIGGER / DAQ

- Three Level Trigger

GEM Trigger/DAQ Design Goals				
Level	Rate In	Rate Out	Latency	Comments
1	60 MHz	10 kHz	2μs	Synchronous, Pipelined
2	100 kHz	300 Hz	~~100μs~~	Asynchronous, ~~Monotonic~~ "Virtual Level 2"
3	3 kHz	10 Hz	–	CPU Ranch

- Level 1

Bunch Crossing

- Timing Discr.
- Digital Filtering

Calorimetry

Super-towers $\Delta\eta \times \Delta\phi = .16 \times .16$

- γ/e HAC Veto/Isolation
- Jets Local Sums
- $\not{E}_T$ Global Sums

Muons

- "OR"ed Anode Wire Discr.

Hit Patterns in 3rd and/or 2nd Lay.
$\Rightarrow P_\perp$ / Pointing Cut

- Level 2

Calorimetry

Full Detector Granularity

- Shower Shape
- Isolation
- Associated Electron Track (Central Tracker)

Muons

Full $P_\perp$ Measurement

Calorimeter Trigger Sums

Single Cells

EM cell
(.027x.027)

HAD cell
(.08x.08)

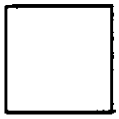

EM = 6X6 EM cells
(.16 x .16)

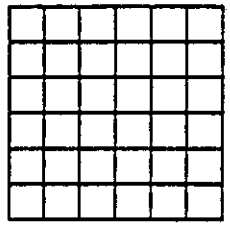

Electromagnetic Sum

SP = 4x4 HAD
(.32 x .32)

Layer 1
HAD. Isolation

Layer 2+3+4

Single Particle (HAD)

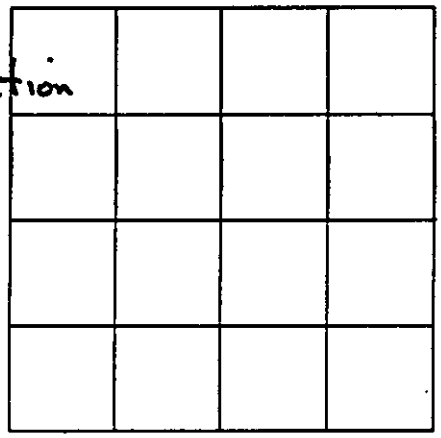

SPEM = 2X2 EM
(.32 x .32)

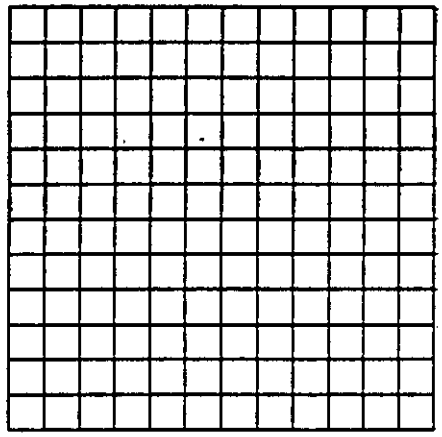

Single Particle (EM)

Jet Sum

JET = 2x2 SP
(.64 x .64)

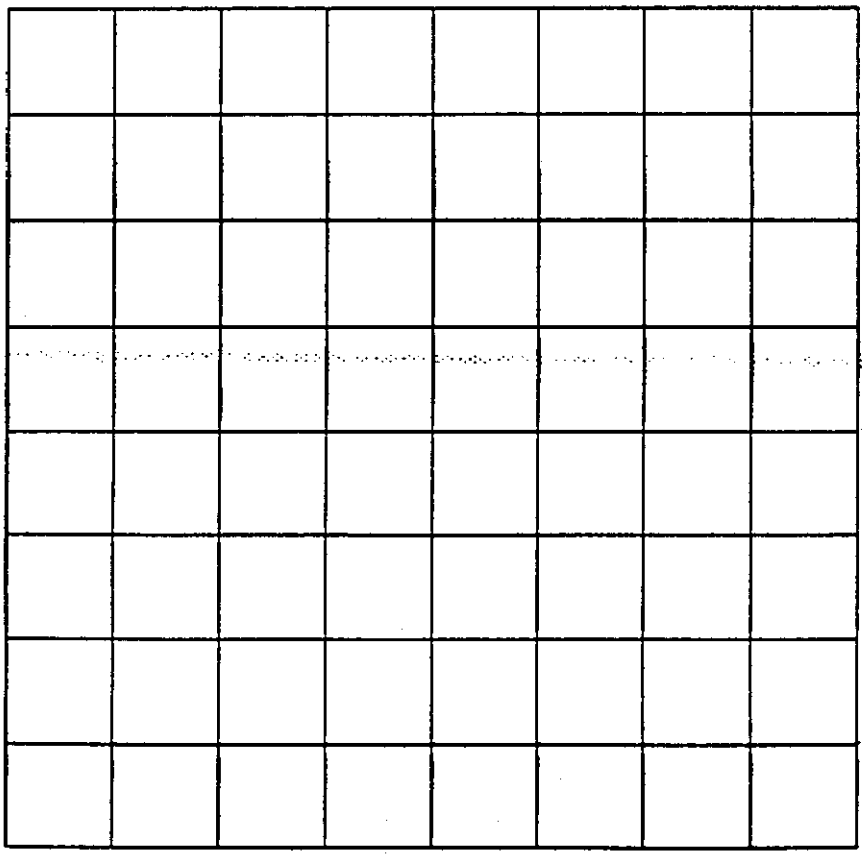

E_T

$\not{E}_T$

Nearest Neighbor Isolation Logic

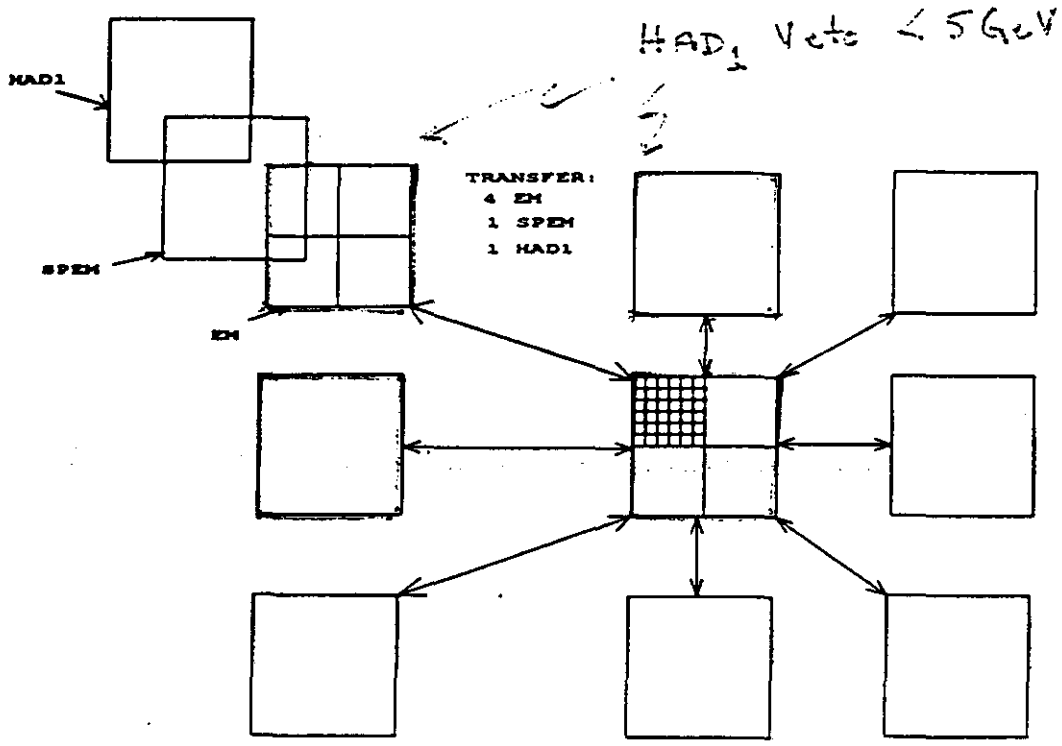

Two-dimensional Edge Counting ⇒ # Clusters

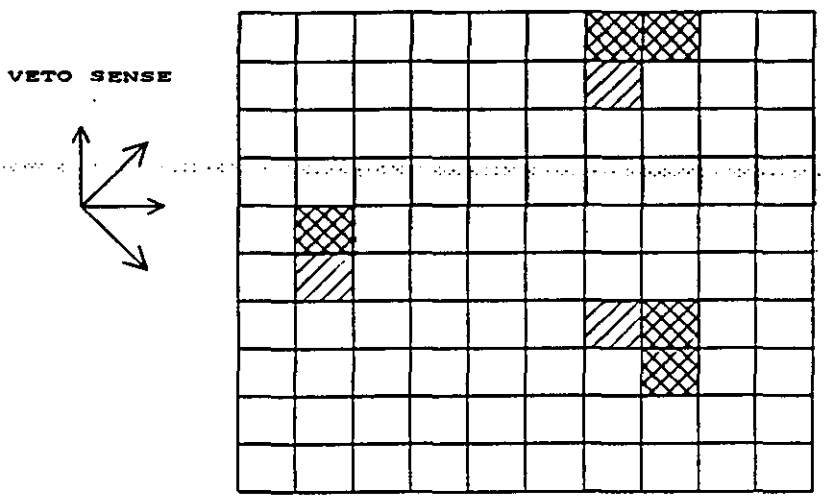

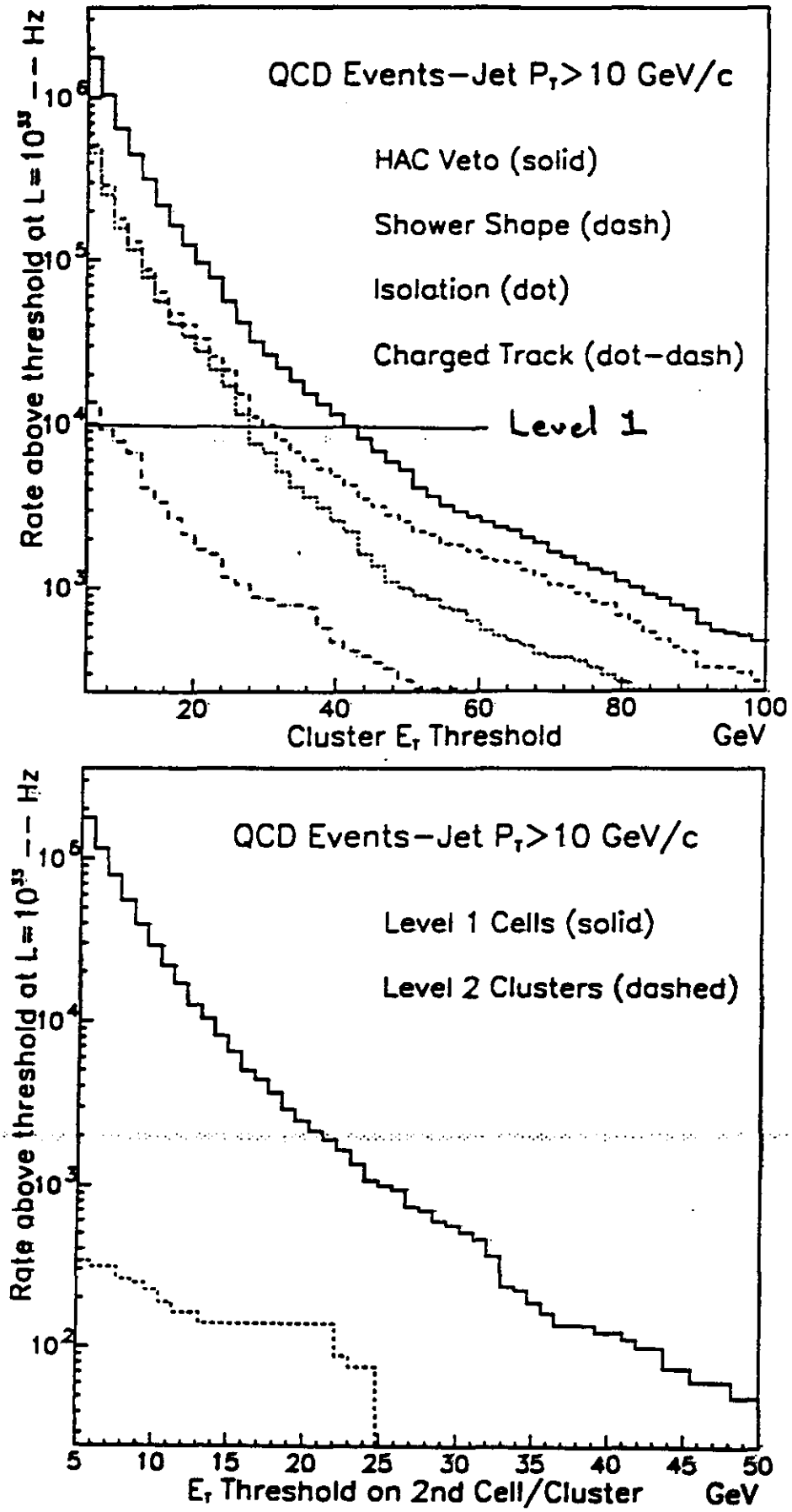

Figure 2.6-2 (a) Rates for single γ/e^+ triggers, (b) rates as a function of the second highest energy γ/e^+ cluster or cell in the event

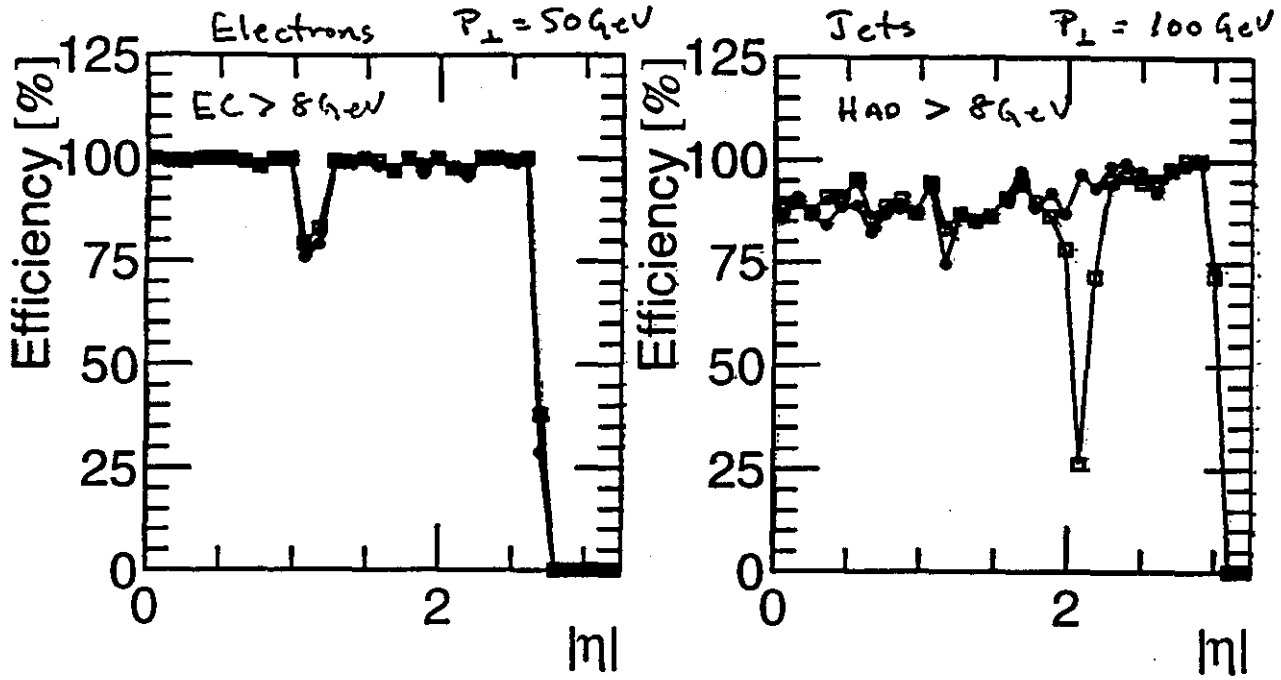

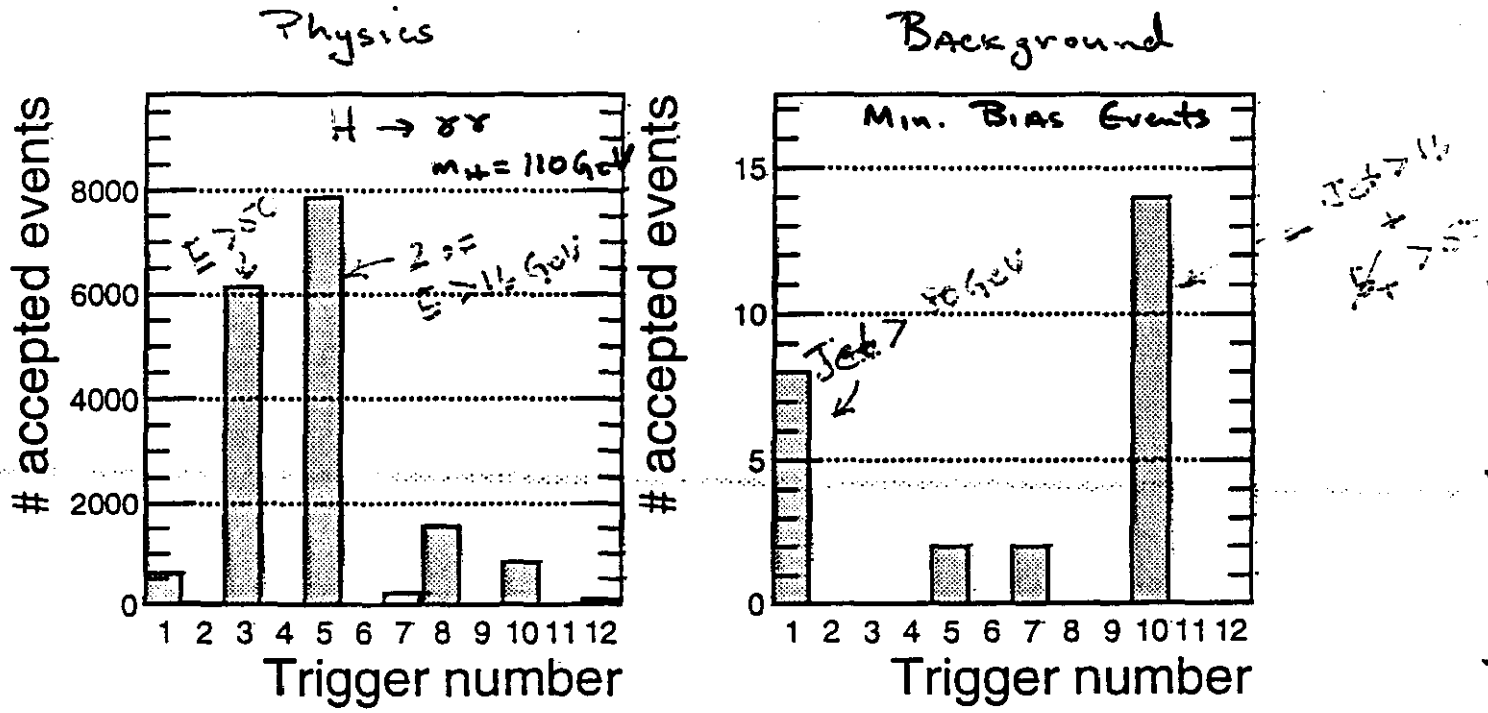

$H \to \gamma\gamma$

80 GeV	84%
110 GeV	92%
140 GeV	96%

Rates:

$\frac{17\ \text{kHz}}{\text{remove } \#10}$ if

MUON TRIGGER STRATEGIES

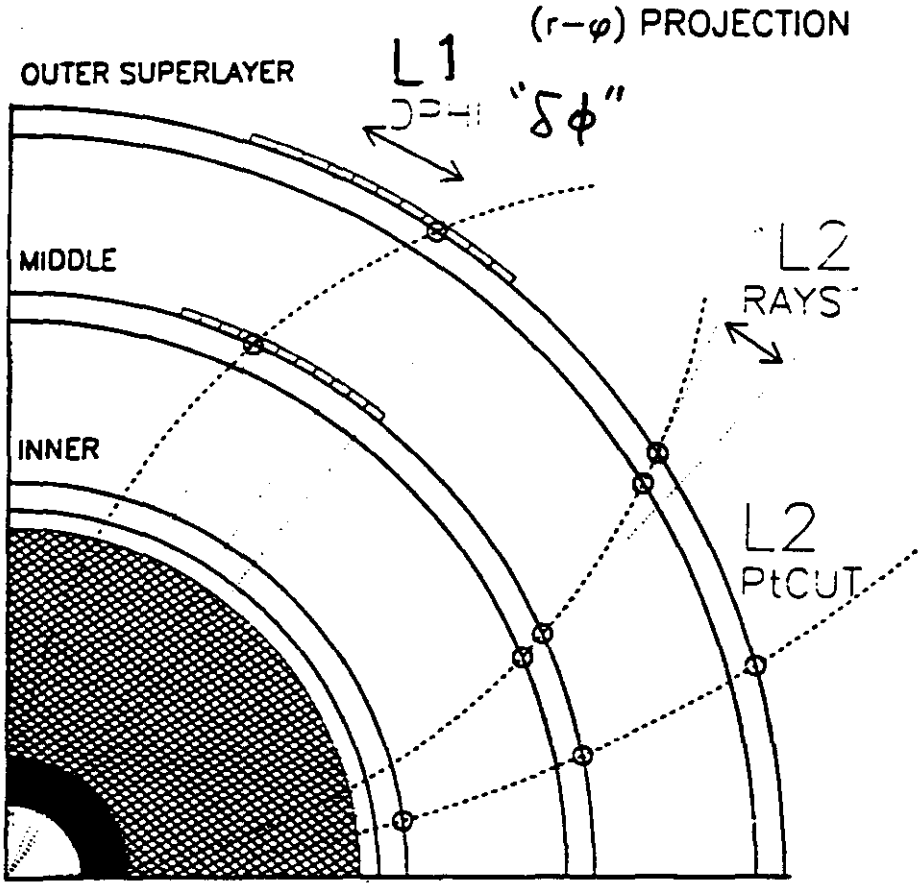

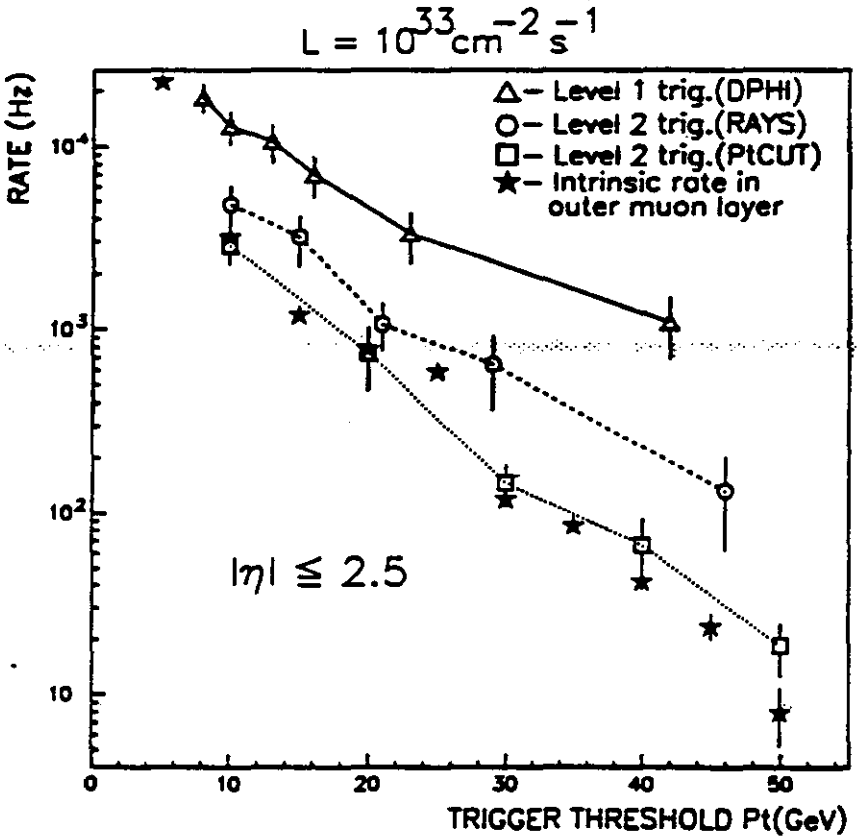

INTEGRATED SINGLE MUON RATES

FROM:PHYSICS 914591 8:20 FEB 17, 1993 2:13PM P.13

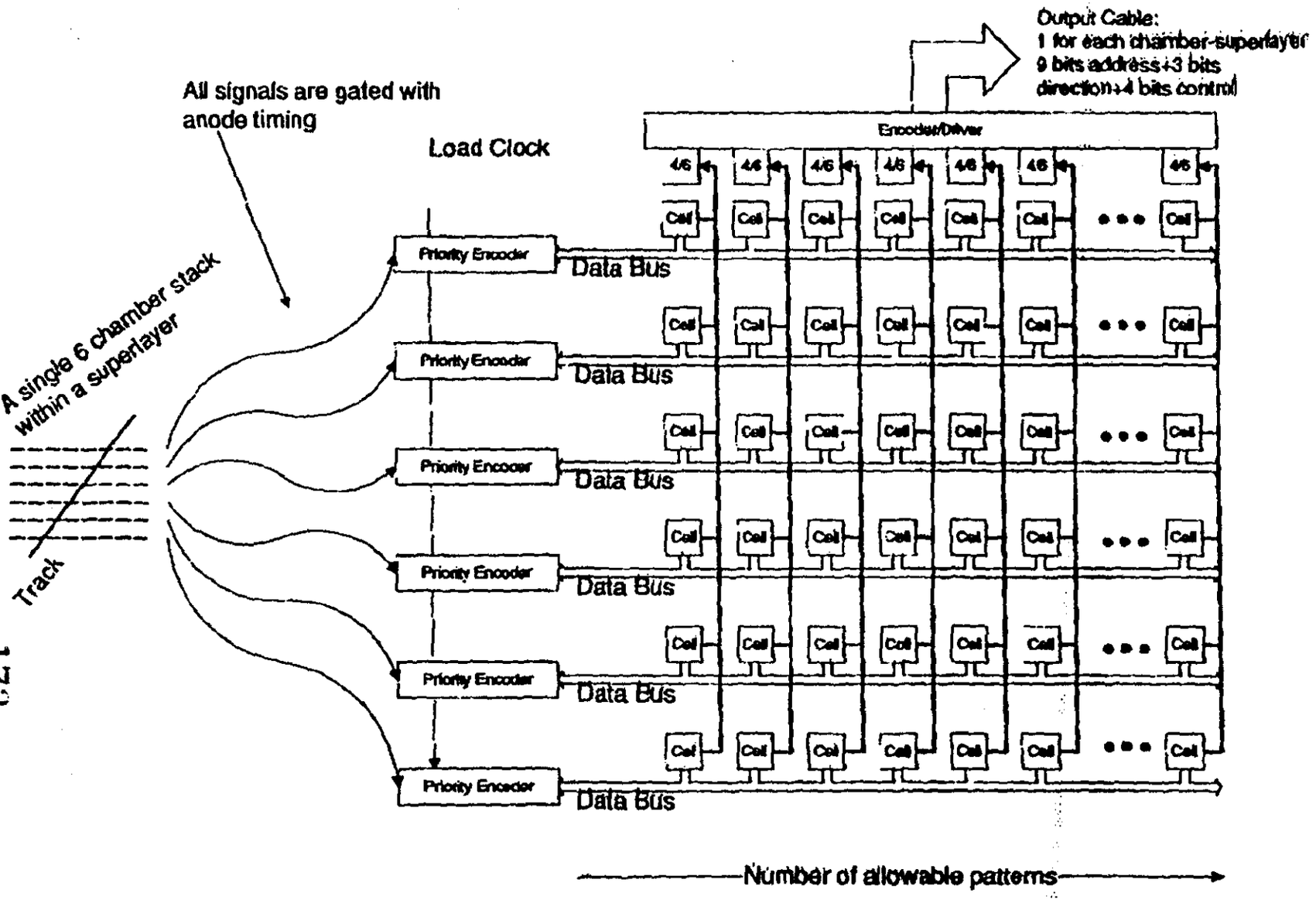

BROOKHAVEN NATIONAL LABORATORY	
Project:GEM-Muon Level 1 Local Encoder	
Date: 2/5/93	Drawn By: M. Atiya

GEM Global Level 1 Trigger

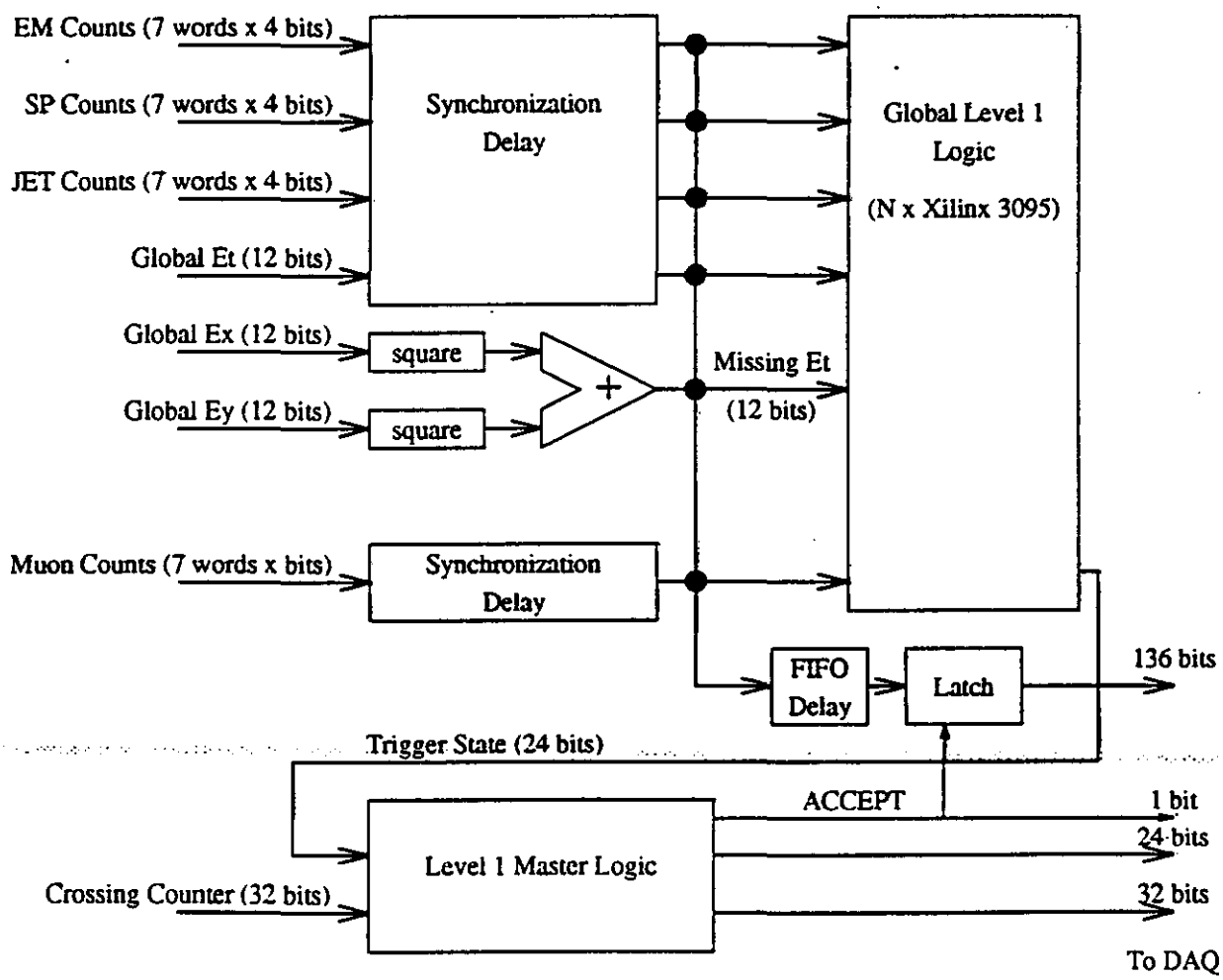

Silicon Tracker Electronics System Architecture

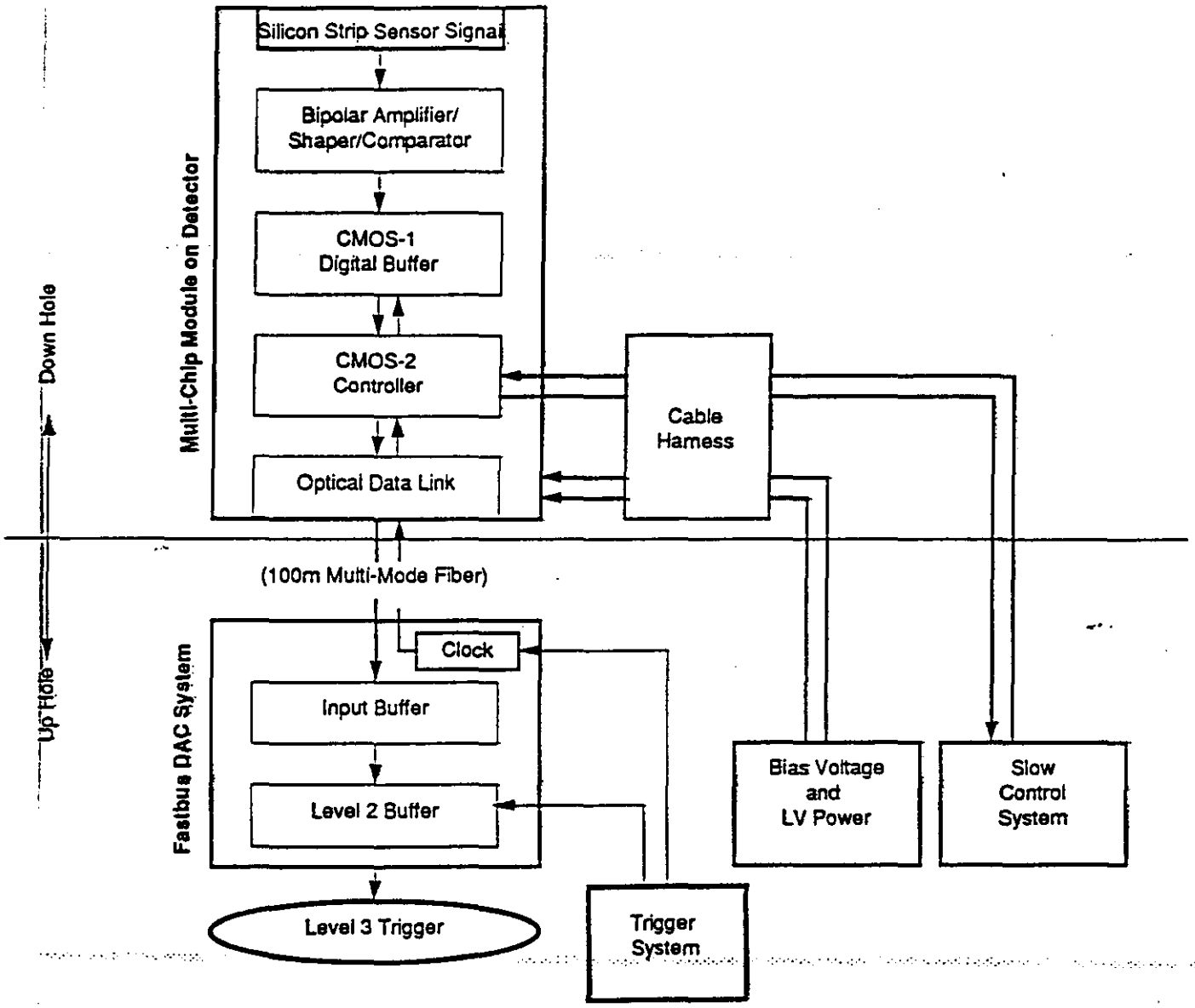

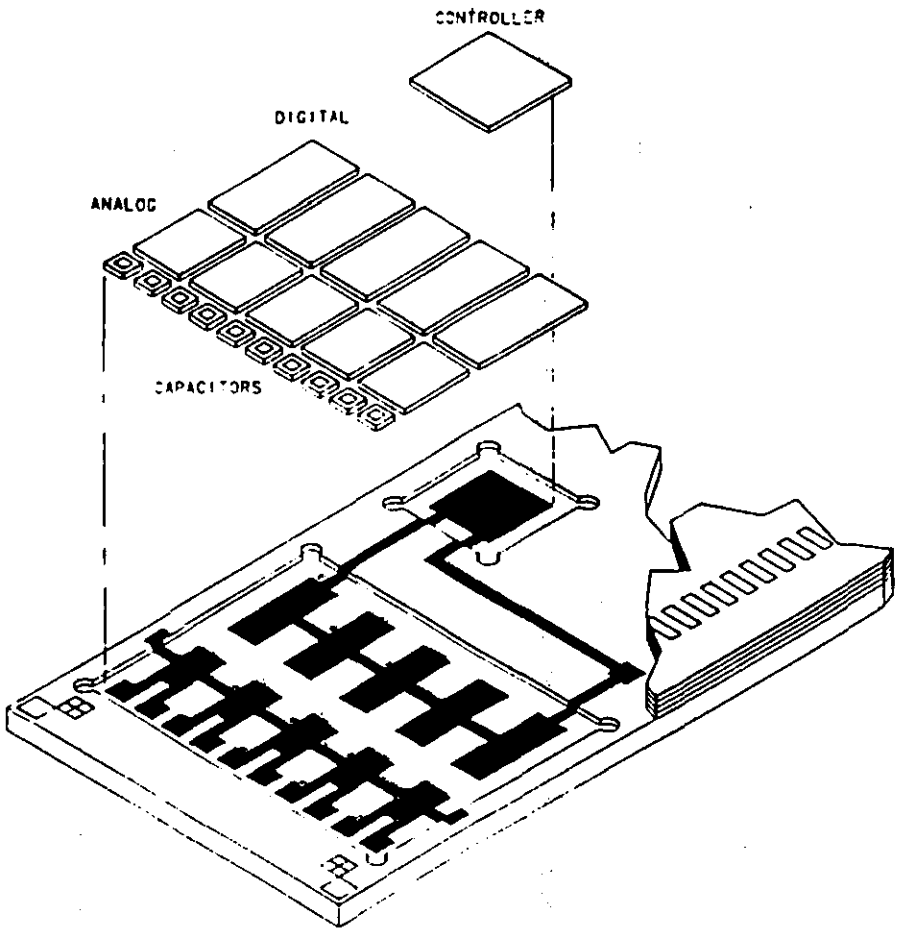

GEM SILICON TRACKER, HDI ISOMETRIC MTO/CHIP LEVEL

LOS ALAMOS NATIONAL LABORATORY, SST-11 MS0448, PO BOX 1663, LOS ALAMOS, NM 87545 9/25/92

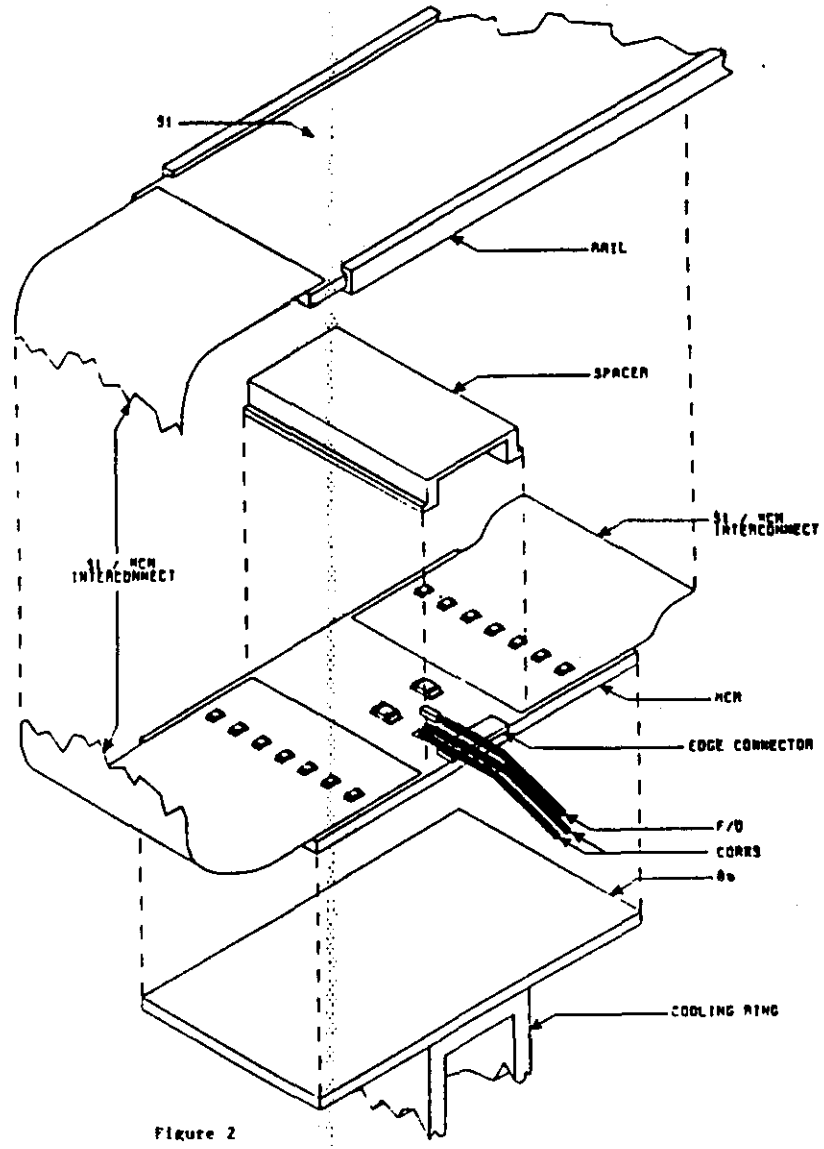

Figure 2

GEM SILICON TRACKER, DETECTOR ASSEMBLY W/SPACER

NOT TO SCALE.

S.C. / C.A. / P.J.A. 9/28/92. CRBum+M.J.K. 11/10/92.

LOS ALAMOS NATIONAL LABORATORY, SST-11, HCDL TEAM, MS0448, PO BOX 1663, LOS ALAMOS NM 87545. PICED FROM: CERSSTIS_?.

IPC Front End Architecture

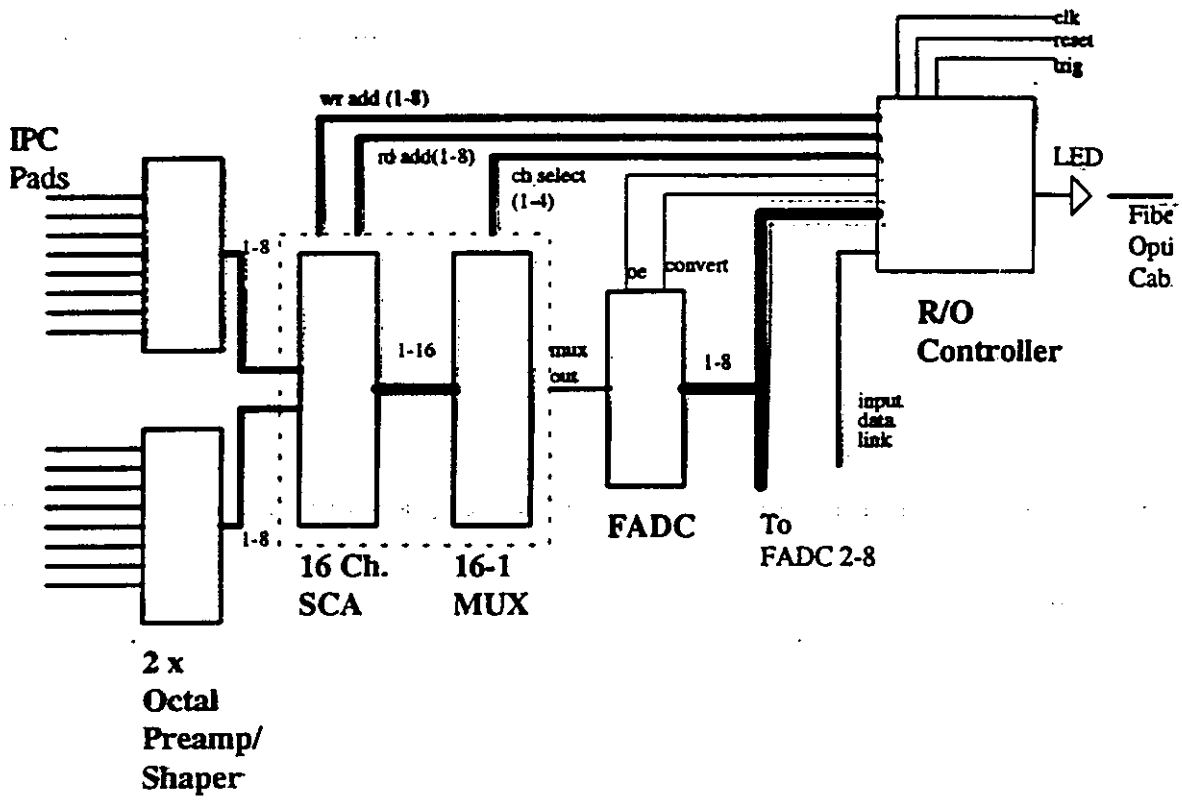

Layout

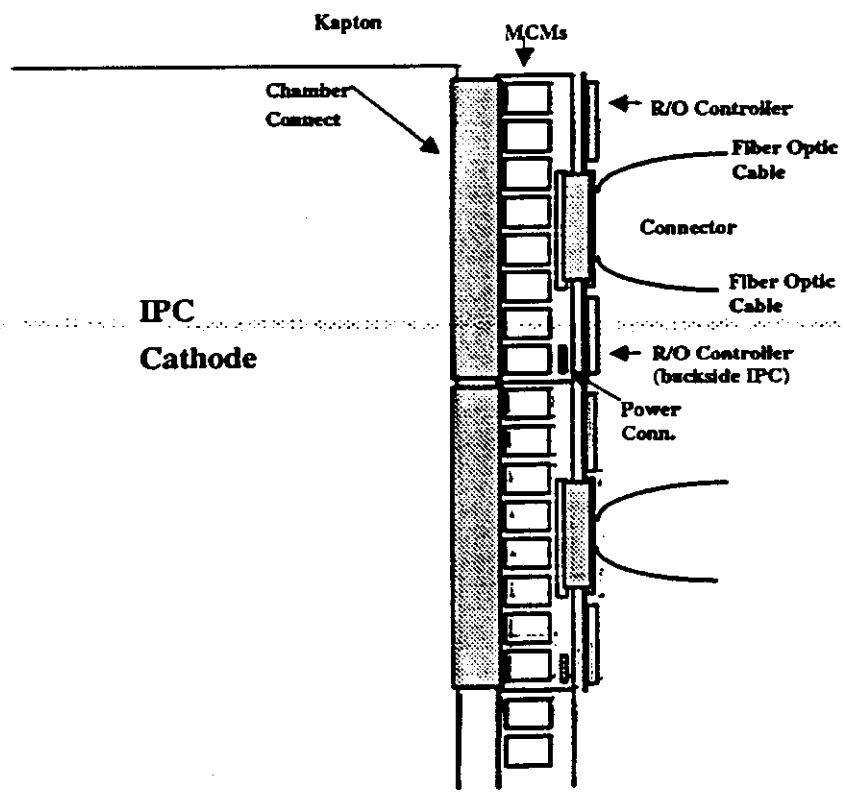

Calorimeter Electronics Chain

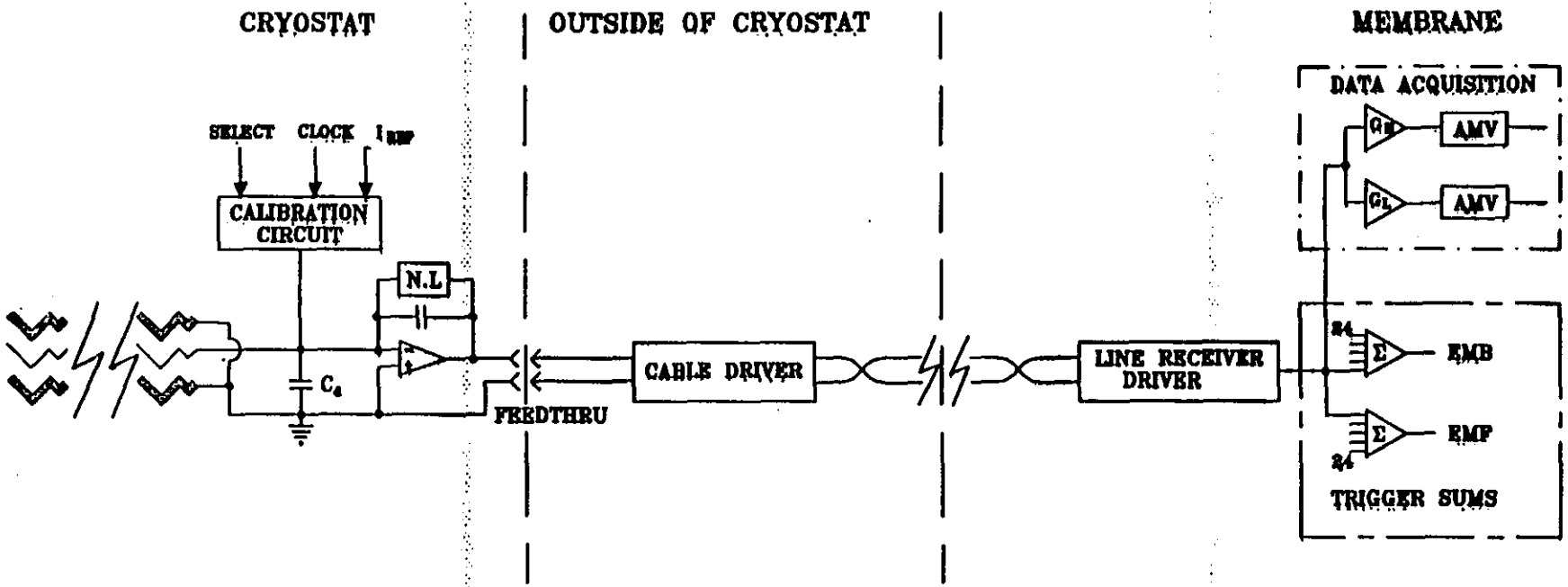

Calorimeter Readout Card

GEM Calorimeter Readout Card

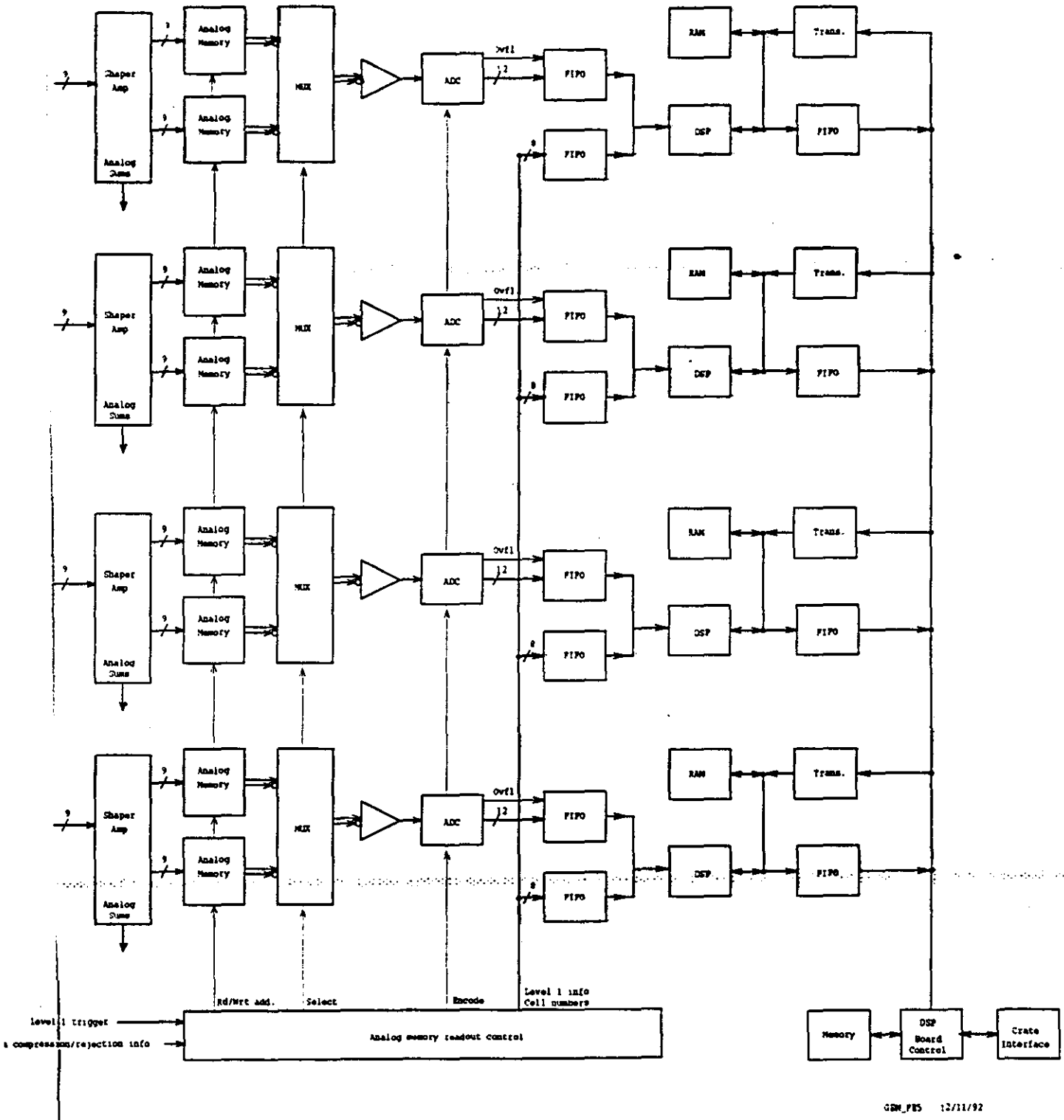

CSC Readout, Trigger, DAQ System

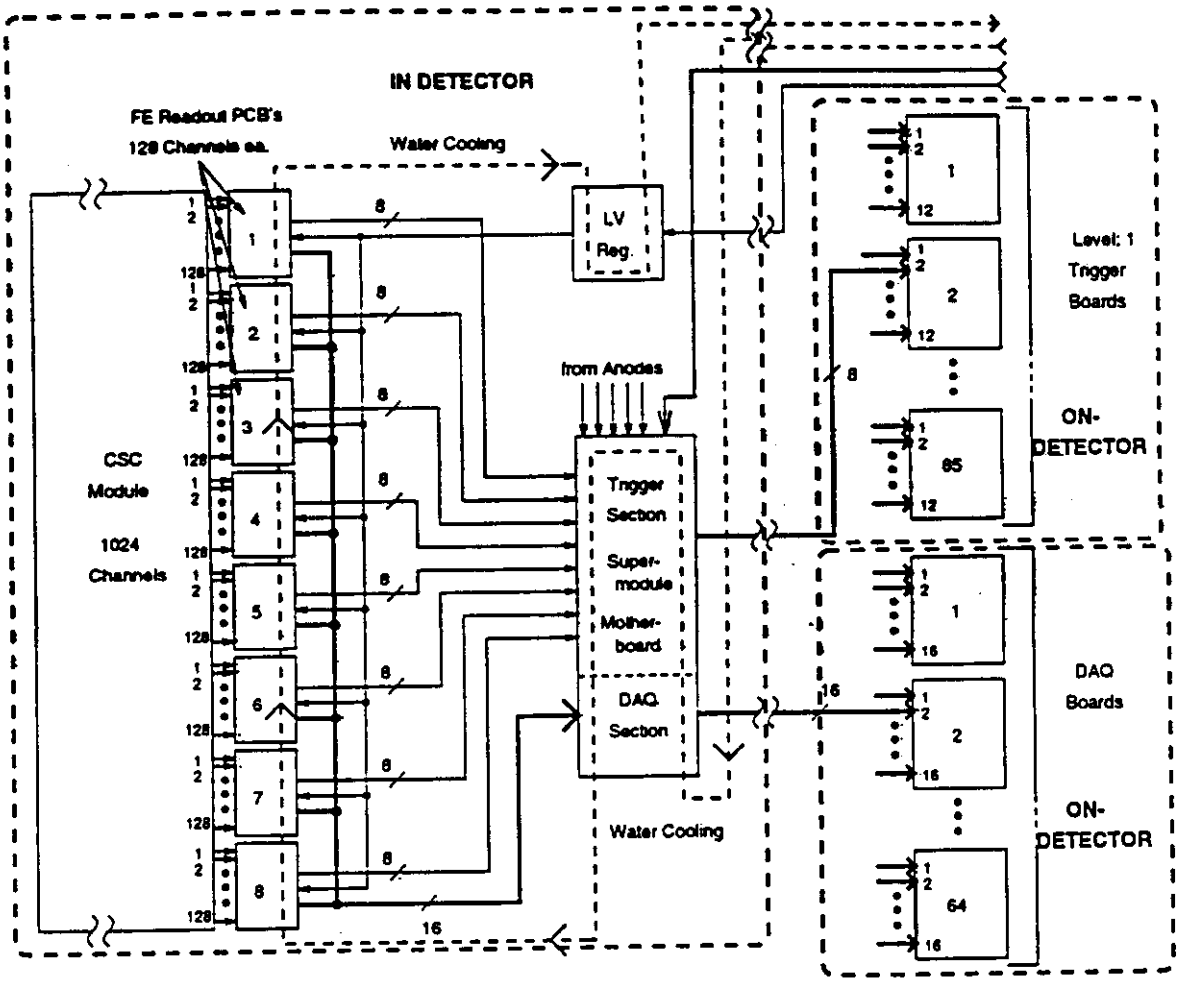

Figure 7.1: Schematic representation of the layer of the readout, trigger, and DAQ system for the CSC's.

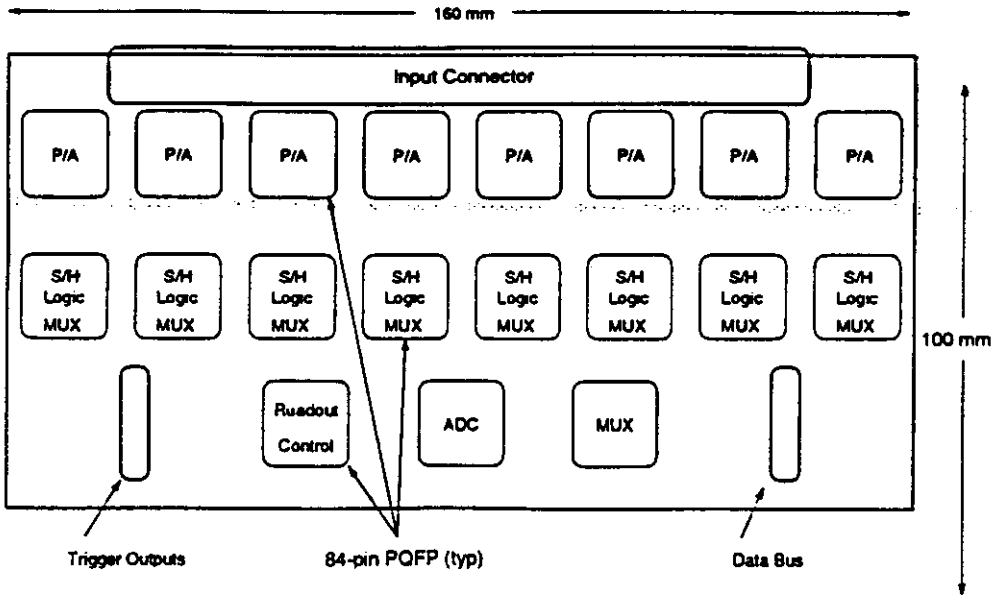

CSC Chamber Board Layout
128 Channel Version

Figure 7.2: Physical layout of the CSC front end printed circuit board. Each 96-channel

CSC Anode Signal Processing

Signal Processing Specifics

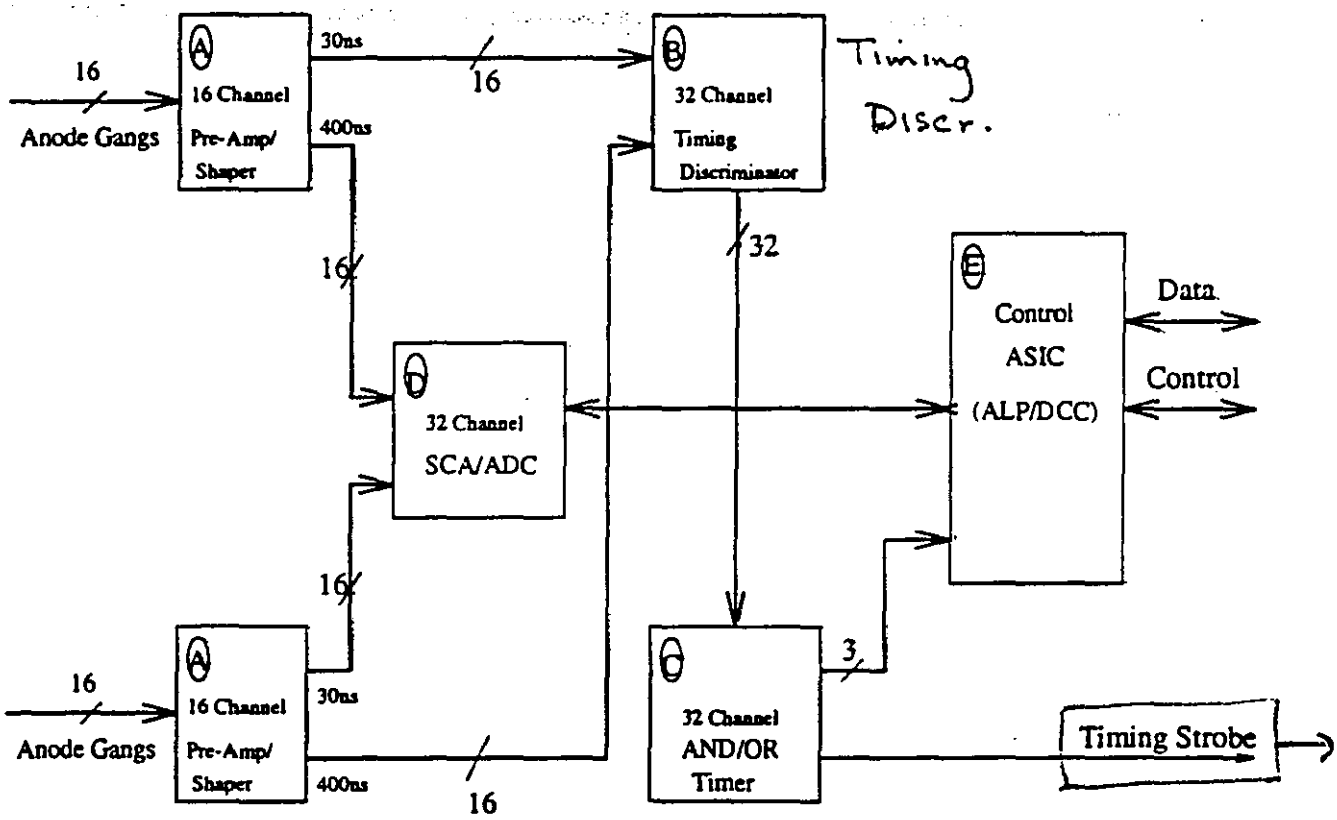

Figure 7.22: Block diagram of Anode Signal Processing.

gem

γeμ

Presentation by:

K. McFarlane

(1)

DRAFT DRAFT DRAFT DRAFT DRAFT DRAFT DRAFT DRAFT DRAFT DRAFT

COMPUTING, CONTROLS, NETWORKING
OVERVIEW
SYSTEM MODEL
FUNCTIONAL USER REQUIREMENTS
SYSTEM DEVELOPMENT
HARDWARE IMPLEMENTATION MODEL
SOFTWARE IMPLEMENTATION
PROJECTS
SCHEDULE
TECHNOLOGY ASSUMPTIONS
QUALITY ASSURANCE
MANAGEMENT
APPENDIX -- SYSTEM DEVELOPMENT CYCLE
REFERENCES
GLOSSARY

Presented by

K. McFarlane

3/18/93

COMPUTING, CONTROLS, NETWORKING

OVERVIEW
SYSTEM MODEL
- EXTERNAL ENTITIES
- DATA STORES
- PROCESSES

FUNCTIONAL USER REQUIREMENTS
- COMMON USER INTERFACE
- RESPONSIVENESS
- AUTOMATION
- TOOLS
- AVAILABILITY OF ALL DATA
- FLEXIBILITY

SYSTEM DEVELOPMENT
- SOFTWARE
- HARDWARE
- EVOLUTION TOWARDS A TRUSTED SYSTEM

HARDWARE IMPLEMENTATION MODEL
- OVERVIEW
- STANDARDS AND INTEGRATION
- GLOBAL CONTROL SYSTEM
- ONLINE SYSTEM
- OFFLINE SYSTEMS
- STORAGE SYSTEM
- DATA LINKS, NETWORKS, COMMUNICATIONS
- STAGING

SOFTWARE IMPLEMENTATION
- FRAMEWORK
- DETECTOR SUBSYSTEMS
- DATABASES
- GLOBAL PHYSICS TASKS AND VALIDATION
- COMPUTING SYSTEMS
- SCALE OF SOFTWARE DEVELOPMENT

PROJECTS
- GLOBAL PHYSICS TASKS
- FRAMEWORK
- DATABASE
- COMPUTING SYSTEMS

SCHEDULE

TECHNOLOGY ASSUMPTIONS
- CPU POWER
- MEMORY
- I/O BANDWIDTH
- DISK
- TAPE
- DATA LINKS AND NETWORKS

QUALITY ASSURANCE

MANAGEMENT
- OVERVIEW
- SUBSYSTEM LEADER
- COMPUTING SUBSYSTEM STEERING COMMITTEE (CSSC)

3

DRAFT DRAFT DRAFT DRAFT DRAFT DRAFT DRAFT DRAFT DRAFT DRAFT

GEM COMPUTING SUBSYSTEM PROJECT MANAGER (CSPM)
CHIEF ENGINEER
GROUP LEADERS
PROJECT LEADERS
REVIEW PROCESS
APPENDIX -- SYSTEM DEVELOPMENT CYCLE
INTRODUCTION
FEASIBILITY STUDY
SYSTEM ANALYSIS
DESIGN
IMPLEMENTATION
TEST SPECIFICATION
QUALITY ASSURANCE
MANUAL PROCEDURES
DATABASE CONVERSION
INSTALLATION
STANDARDS
MANAGEMENT
REFERENCES
GLOSSARY

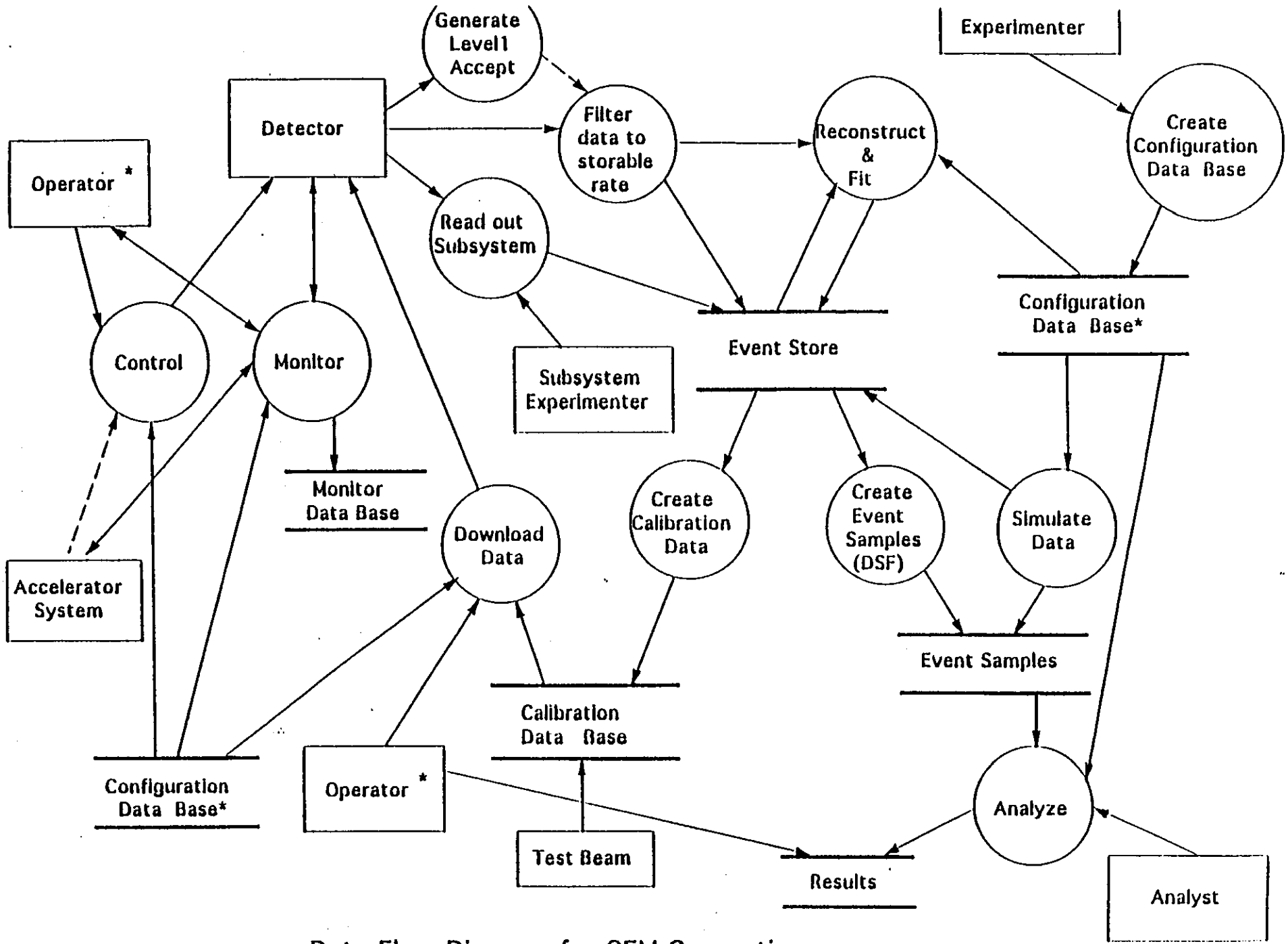

Data Flow Diagram for GEM Computing

5

Table X.1 -- Overall Event data flow model as assumed

Parameter	FY1999	FY2000	FY2001	FY2002
Peak Luminosity (cm-2s-1)	10^30	10^31	10^32	10^33
Total collision time (s)	10^6	10^7	10^7	10^7
Level 1 trigger level	100 microb	40 microb	40 microb	20 microb
Level 1 trigger rate (peak)	100 Hz	400 Hz	4 kHz	20 kHz
Event size	1 MB	0.5 MB	0.2 MB	0.2 MB
Data Rate (peak)	100 MB/s	200 MB/s	800 MB/s	4 GB/s
Event filter (Level 2/3) factor	1	2 (note 1)	8	40
Filter level	100 microb	20 microb	5 microb	500 nb
Event Rate stored	100 Hz	200 Hz	500 Hz	500 Hz
Rate to storage (peak)	100 MB/s	100 MB/s	100 MB/s	100 MB/s
Stored event data for year	100 TB	0.5 PB	1 PB	1 PB
Integrated luminosity (pb-1)	1	100	1,000	10,000
PASS1 computational load, SSCUPs (note 2)	2x10^4	2x10^5	2x10^5	2x10^5

...

...

...

...

Table XX.X -- Profile of a GEM physics data event

Item	Level Created	Data type	Size
1.	Level 1	Event no., run no., time, Level 1 trigger data, version number	50 Bytes
2.	Event filter	Event filter data for rejected event, version number	50 Bytes
3.	Event filter	Filter results for accepted event, version number	20 kB
4.	DAQ	Tracker, calorimeter, muon data, version	200 kB - 1MB
5.	Reconstruction	Calorimeter clusters, track segments, fitted tracks, photons, muons, jets, missing E_T, etc., version	200 kB
6.	DSF creation	Identified particles, vertices, error matrices, fit parameters, event hypotheses..., version	20 kB
7.	mini-DSF creation	Classified events with identified particles, version	2 kB

Table XX.2 Anticipated one-year event samples, including simulation output

Type	Number of active files	Record size	No. of records	File size	Equivalent Cross sect
Calibration (e.g Z)	20	10 kB	10^7	100 GB	1 nb
Calibration (e.g W)	10	1 kB	10^8	100 GB	10 nb
Physics Process (full events)	40	400 kB	10^7	4 TB	1 nb
Physics Process (e.g ttbar)	20	20 kB	10^8	2 TB	10 nb
Physics Process (e.g. H->2gamma)	20	20 kB	10^7	200 GB	1 nb
Physics Process (mini-DSF)	200	2 kB	10^7	20 GB	1 nb
Physics process (e.g. rare events)	100	400	10^6		
Physics Process (e.g. gluino search)	200	20 kB	10^6	20 GB	<100 pb
Physics (mini-DSF)	200	2 kB	10^6	2 GB	<100 pb

Table XX.3 – Simulation Goals

Simulation Type	Typical Purposes	Runs	Events/run	Compute time/event (SSCUP-s)	Total Requirement (SSCUP-s)
Subdetector (GEANT)	Design studies	1000	10^4	10^5	10^12
Subdetector (GEANT)	Test beam comparison	1000	10^5	10^5	10^13
Subdetector (full GEANT)	design studies, multi-gamma rejection, pointing	100	10^6	10^5	10^13
Subdetector (EGS)	comparison to GEANT	100	10^5	4x10^5	4x10^12
Global (full GEANT)	pattern recognition, correlation between subdetectors	100	10^6	2x10^5	2x10^13
Global (CALOR, LAHET)	Neutron flux, comparison to GEANT	500	10^4	10^6	5x10^12
Global parameterized GEANT	Jet rejection, energy deposition fluctuations, track recognition and fitting	1000	10^7	10^3	10^13
Global parameterized non-GEANT	Physics studies, jet rejection	1000	10^8	50	5x10^12
Generator studies	Physics studies	1000	10^7	30	3x10^11
Parameterized high-luminosity studies	Pileup at 10^34	100	10^6	10^3	10^11

The total requirement through 1999 is approximately 6x10^13 SSCUP-s, which can be produced by a facility of 10^6 SSCUPs in two years. While this may seem an ambitious and demanding program, it is clearly not out of the question. Careful planning will reduce the requirements and some studies could be done over a period of several years, as the cost of computing drops.

9

Table Y -- Estimates of lines of code of Software

Category	Lines of Code
Controls software	50k
Online software	50k
Reconstruction	200k
Physics Analysis	50k
Event Display and Graphics	40k
Database	20k
Framework	50k
Utilities	100k
Generators	20k
Simulation	150k

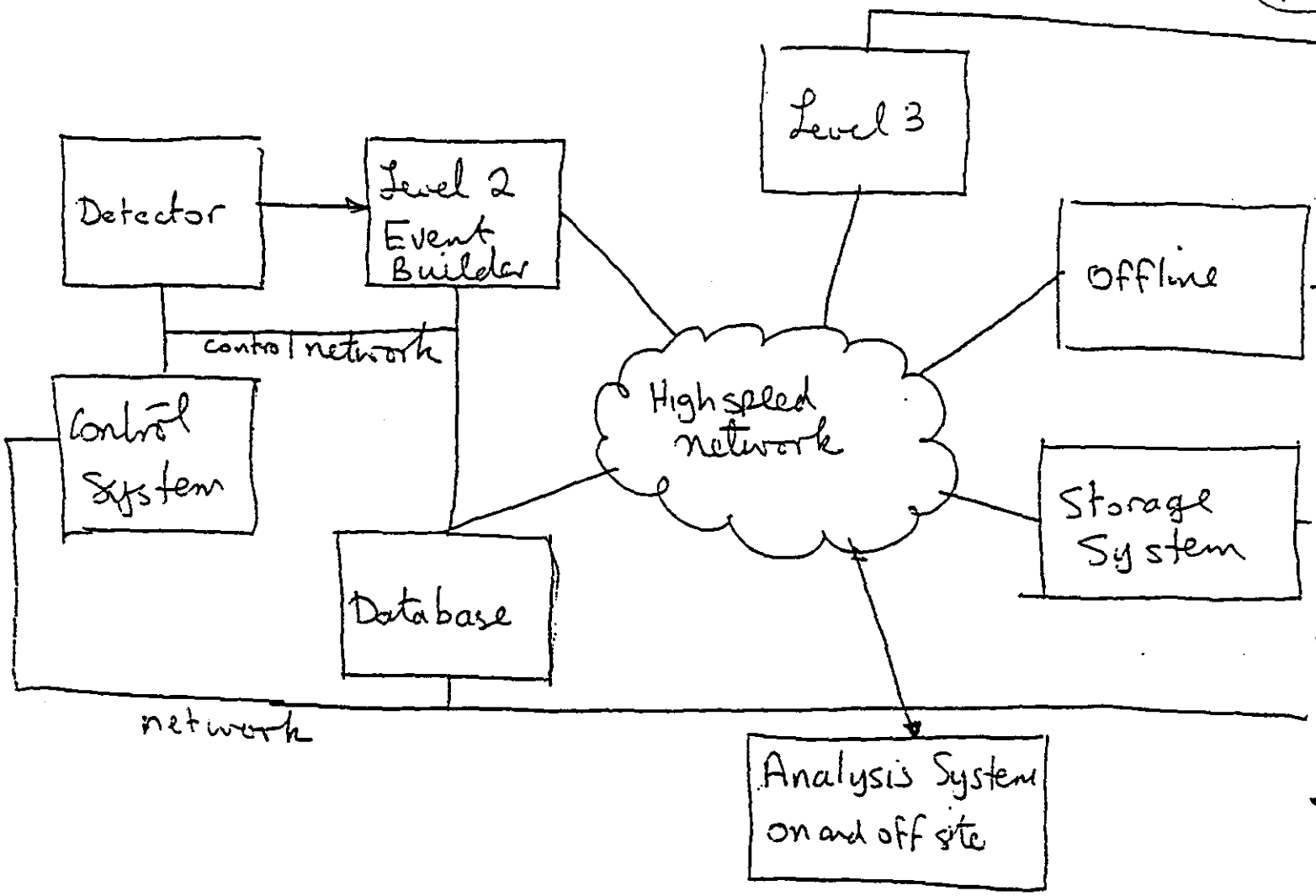

Figure - Generic system

E-SYSTEMS
Garland
Division

SUPERCONDUCTING SUPER COLLIDER LABORATORY
GEM DETECTOR COMPUTING STUDY

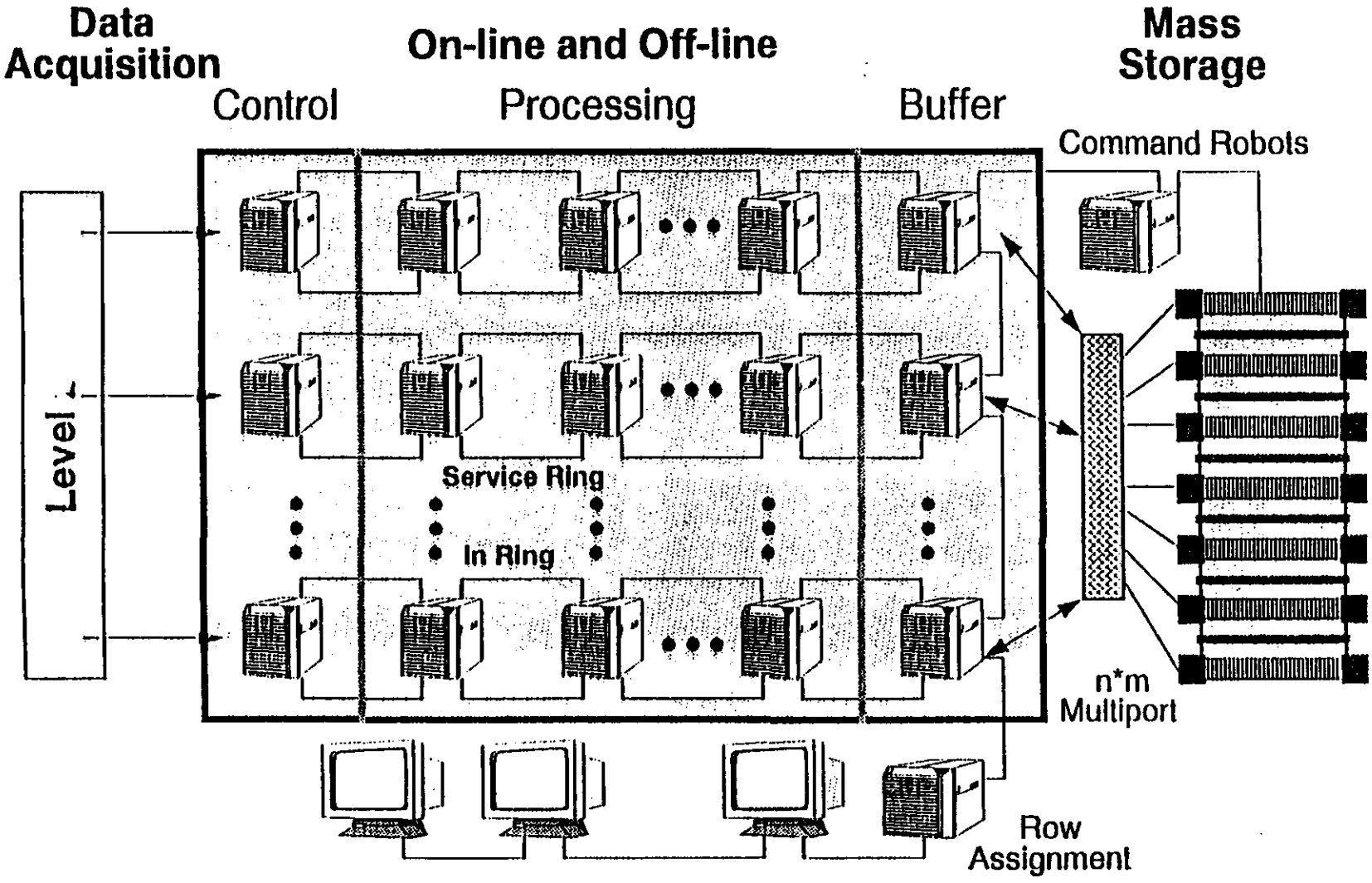

September 18, 1992
416-34066

E-SYSTEMS
Garland
Division

SUPERCONDUCTING SUPER COLLIDER LABORATORY
GEM DETECTOR COMPUTING STUDY

PASS 2 COMPLETION TIMES

ROBOT VARIATION

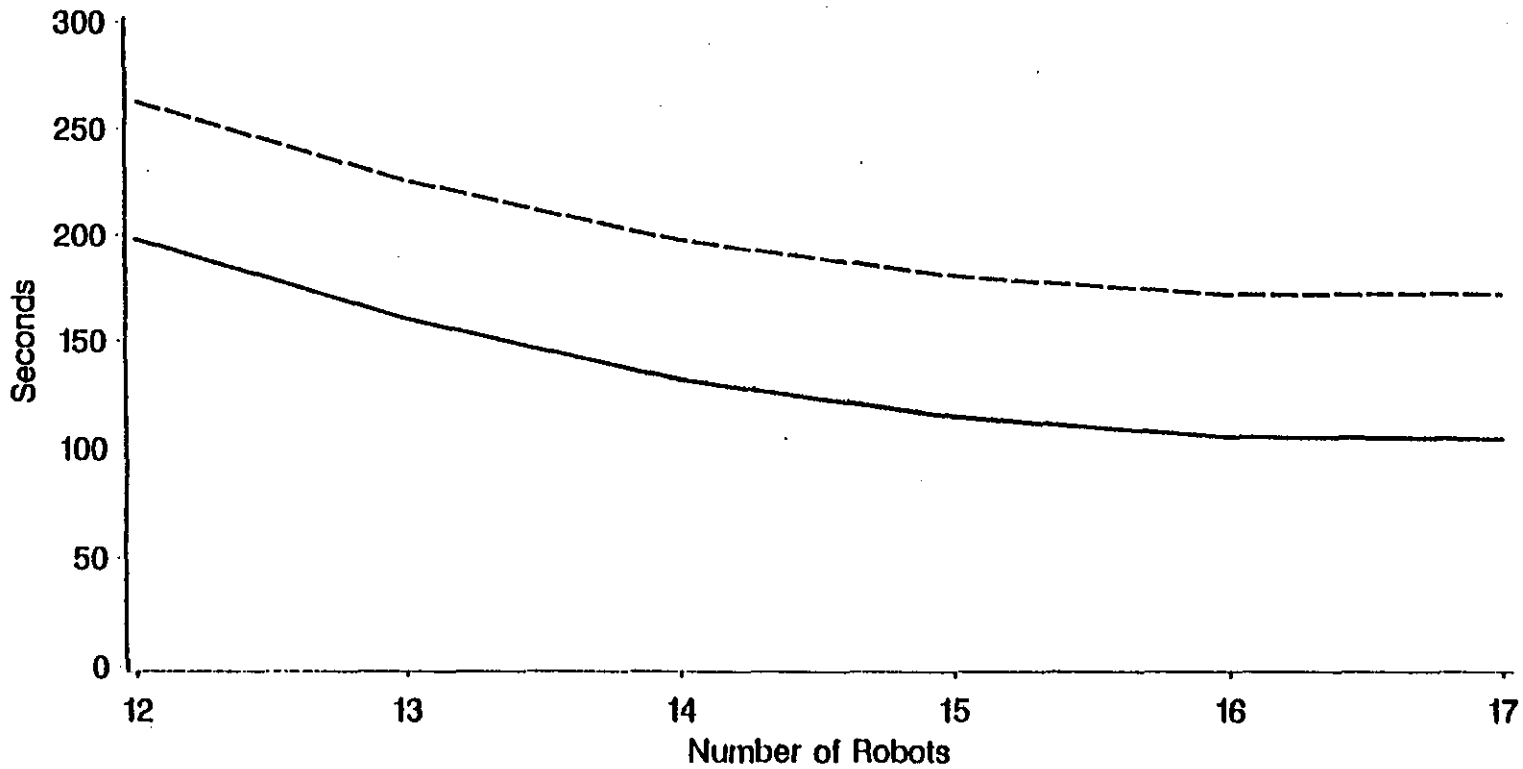

——— P2 Retrieved — — — P2 Processed

NOTE: 3 Drives per Robot (1 for Stores, 2 for Retrieves)

September 18, 1992
416-34066

Requirements

System Analysis and Implementation

Data modelling

Database

Validation

Software Framework

System interface layer

Utilities

Physics Applications

Analysis tools

Documentation tools

Parallel Processing and Interprocess Communication

Software Engineering

CASE tools

Languages

Integrated Development Environment (IDE)

Methodologies

Workshops

Reports

Quality Assurance

Production systems

DRAFT DRAFT DRAFT DRAFT DRAFT DRAFT DRAFT DRAFT DRAFT DRAFT

DETECTOR SUBSYSTEMS

The Detector subsystem tasks are to provide simulations that fit into the general framework; trigger, event filter and pattern recognition strategies for the subdetector; a model of the data from the detector; and requirements for the framework, the data bases and the computing capacity. The groups working on these tasks will evolve from the existing subsytem groups. The subsystem task areas are:

Tracker

Calorimeter

Muon

Electronics/Trigger/DAQ

Shielding

DATABASES

The Database tasks are to set requirements for, create and maintain the databases for the experiment. The main data bases will be:

Configuration data base

Monitor data base

Calibration data base

Event data base

(15)

GLOBAL PHYSICS TASKS AND VALIDATION

Validation

Data Modelling

Interaction generators

Event filter and triggers

Global Full Simulation

Global Fast Simulation

Global Reconstruction and Fitting

Particle identification

Creation of data samples

Physics Analysis

COMPUTING SYSTEMS

Control/monitor system

Online Computing

Data links

Communications

Offline Computing

Storage systems

Hardware test systems

Offsite computing

8. PROJECTS

8.1. GLOBAL PHYSICS TASKS

The most important of the global physics tasks to be carried out at the SSCL is in the area of simulations. Other tasks will be supported mainly by the collaboration. Global simulations of the detector will be supported at the SSCL by PRCD. They will be at several levels: parameterized non-GEANT, parameterized and mixture level GEANT and full GEANT. As a calorimeter-based detector GEM will need substantial full simulation support.

8.1.1. Global Fast parameterized simulation

8.1.2. Global Mixture Level Simulation

8.1.3. Global Full simulation

A full and global simulation is an essential requirement for GEM, based as it is on high-precision calorimetry. The current version of SIGEM (version 1.2) models Baseline 2 in great detail, and will be the basis of future full simulations. It also supports parameterized (GLFLASH) simulations. Support for maintenance and distribution of full simulations should come from PRCD. Among the functions of a full simulation are:

Very precise global studies in general

Detailed calorimeter simulations to study performance and weighting

Fluctuations in jet rejection

Crack-finding

Occupancies

Linking up tracker with muon system

Pattern recognition

Study of event filters, triggers

Generation of test data files for validation.

Neutron/gamma backgrounds

8.2. FRAMEWORK

GEM has developed a preliminary software framework, using Unix(tm) and Free Software Foundation tools. This is expressed in a software base of utilities, the `gemfast` program, the `gemgen` generator interface package, code management and distribution by CVS, a self-documentation system. The software base is maintained on five Unix platforms; the maintenance and distribution will come from PRCD. In addition, we need to establish groups in cooperation with PRCD on the following issues:

Data modelling/management/structures

C++ pilot project

Interprocess Communication and Control

Parallel Processing support

Analysis framework and tools

Requirements

Software rapid prototyping

8.3. DATABASE

Appropriate data bases are now crucial to HEP; support from PRCD is requested for:

Data base in general

Geometry data base in the short term for simulation support

Data base for test beam support

8.4. COMPUTING SYSTEMS

Areas of computing systems that are particularly important to GEM and where support is needed from PRCD are listed below. Of particular important is support of test beam work at FNAL and elsewhere with a fully-integrated hardware and software system that demonstrates the overall features of a final system.

Data links

Validation for hardware systems

Online/offline integration

Storage systems

FNAL test beam support.

gem

γeμ

Presentation by:

M. Diwan

NEUTRON TASK FORCE

YURI FISSIAK

LAURIE WATERS

BRENT MOORE

NICOLAI MOKHOV

VLADIMIR GAVRILOV

MILIND DIWAN

MIKE MARX

LOUISA HANSEN

13. RADIATION ENVIRONMENT AND SHIELDING

Table of Contents

13. RADIATION ENVIRONMENT AND SHIELDING
- 13.1 INTRODUCTION
- 13.2 COMPUTATIONAL METHODS
- 13.3 MAIN SOURCES OF RADIATION
  - 13.3.1 Contribution from Protons Lost from the Beam
  - 13.3.2 Contribution from Residual Gas in Vacuum
  - 13.3.3 Contribution from Collisions at the Interaction Point
- 13.4 SHIELDING CONFIGURATIONS
  - 13.4.1 Location and Aperture of the Collimators
  - 13.4.2 Shielding for the Collimators
  - 13.4.3 Forward Calorimter Shielding
  - 13.4.4 Implications for the Beam Pipe
- 13.5 CENTRAL TRACKER
- 13.6 TOTAL RADIATION DOSE
  - 13.6.1 Charged Particle Dose
  - 13.6.2 Electromagnetic and Hadronic Dose
  - 13.6.3 Low Energy Neutron Dose
- 13.7 ACTIVATION
  - 13.7.1 CINDER90 Calculation of Activation
  - 13.7.2 Activation due to Low Energy Neutron Absorption
- 13.8 SUMMARY

INTRODUCTION

- HIT RATES DUE TO NEUTRON, PHOTON, CHARGED PARTICLE FLUENCES

  MUON SYSTEM REQUIREMENT $< 10^4$ n/cm^2/sec

- TOTAL RADIATION DOSE

SCINTILLATOR	0.1 Mrad
ORGANIC CABLES	10 Mrad
EPOXY	500 Mrad
KAPTON	2000 MRad
SILICON	4 Mrad; 10^{14} n/cm^2

- RESIDUAL ACTIVITY

  SPECIAL HANDLING FOR ACTIVATED COMPONENTS
  PILEUP AND HIT RATES IN CALORIMETER AND MUON

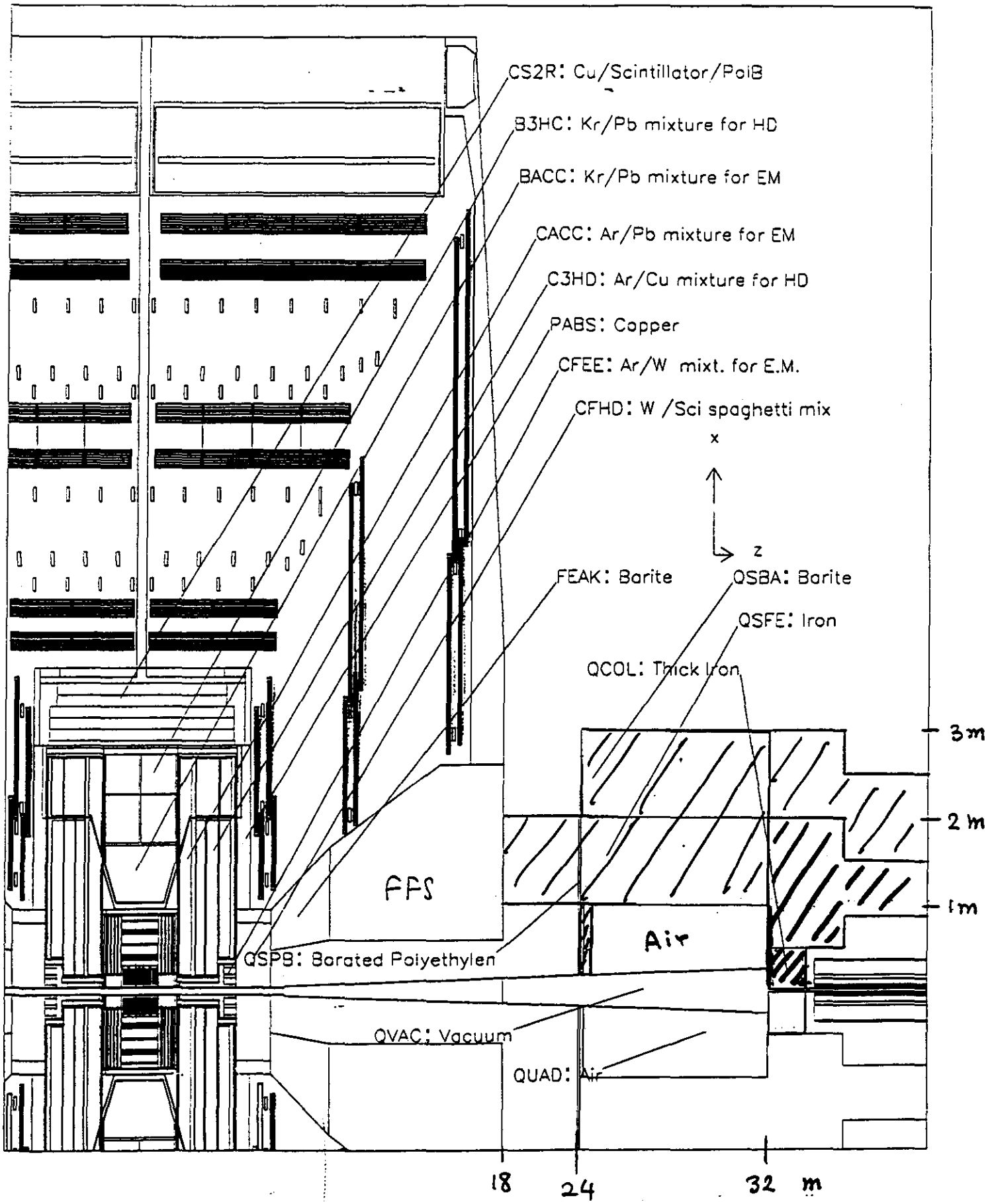
CS2R: Cu/Scintillator/PolB
B3HC: Kr/Pb mixture for HD
BACC: Kr/Pb mixture for EM
CACC: Ar/Pb mixture for EM
C3HD: Ar/Cu mixture for HD
PABS: Copper
CFEE: Ar/W mixt. for E.M.
CFHD: W /Sci spaghetti mix
x
z
FEAK: Barite
QSBA: Barite
QSFE: Iron
QCOL: Thick Iron
3m
2m
1m
FFS
Air
QSPB: Borated Polyethylen
QVAC: Vacuum
QUAD: Air
18
24
32
m

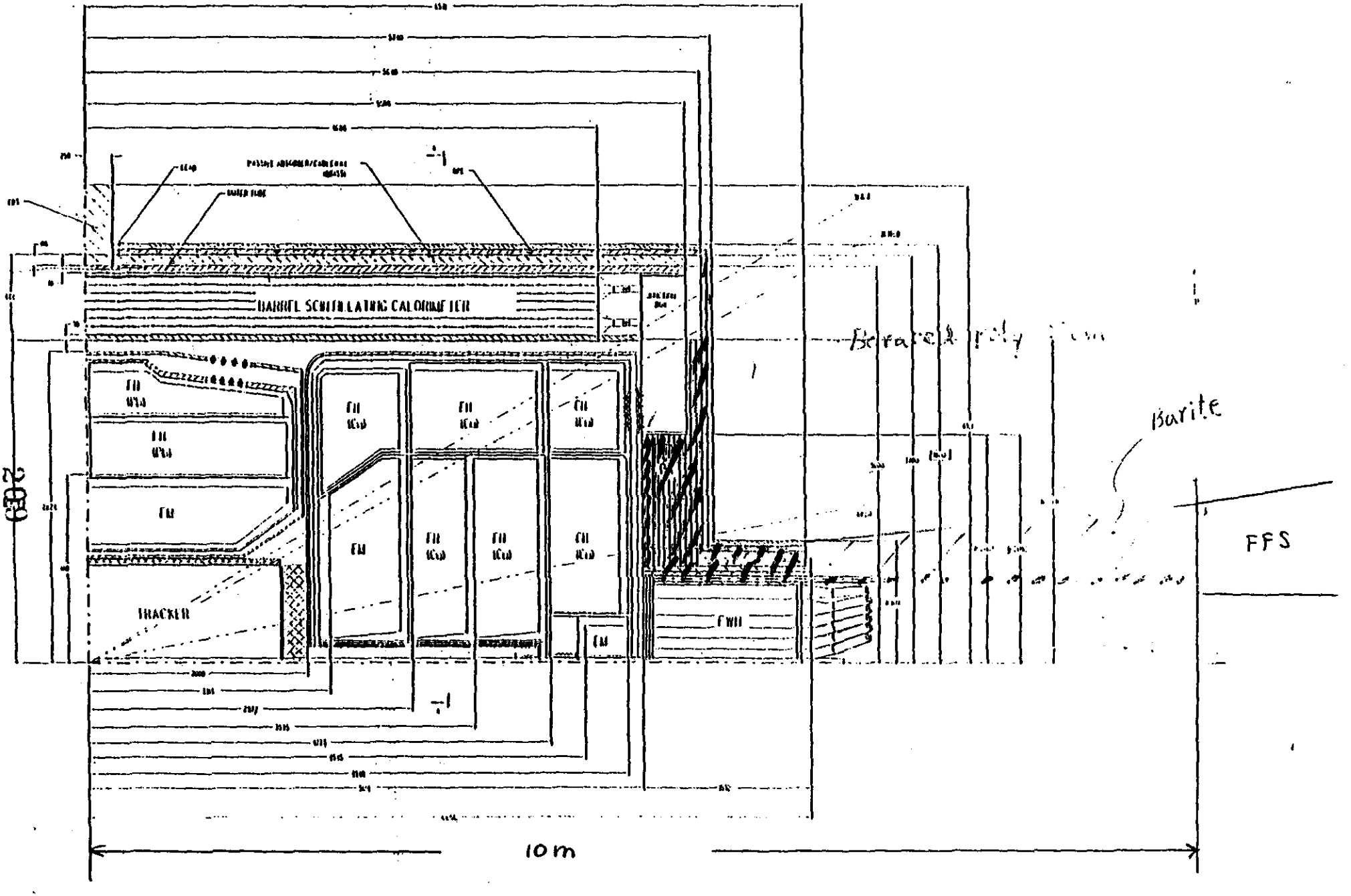
BARREL SCINTILLATING CALORIMETER
TRACKER
Barite
FFS
10 m

SIMULATION TOOLS

- DTUJET: MC EVENT GENERATOR THAT SIMULATES PARTICLE PRODUCTION MODEL OF RANFT ET AL.
- MARS12: MC PROGRAM FOR 3D SIMULATION OF HADRONIC AND EM CASCADES
- LAHET-MCNP: LANL CODE SYSTEM, HAS BEEN USED EXTENSIVELY FOR REACTOR SHIELDING DESIGN
- CALOR89: HADRONIC SHOWER SIMULATION PACKAGE FROM ORNL
- GEANT: WIDELY USED CODE PACKAGE. USED A VERSION WITH ELEMENTS OF CALOR89 IN PLACE (GCALOR).
- CINDER90: MC CODE FOR COMPUTING RESIDUAL RADIOACTIVITY

All calculations for 10^{33} cm^{-2} sec^{-1}

10^{34} cm^{-2} sec^{-1} mentioned in appropriate places

Agreement within X2

ENERGY DEPOSITION

- BEAM LOSS IN LOW BETA QUADS AT BETA MAX

  70 METERS FROM IP
  $5.0\ 10^4$ PROTONS/METER/SEC
  $4.0\ 10^7$ TEV/SEC

- BEAM GAS INTERACTIONS

  10^{-8} TORR N_2 IN WARM REGIONS
  $4.0\ 10^8$ N_2/ CM^3 IN COLD REGIONS
  $3.4\ 10^7$ TEV/SEC

- P-P INTERACTIONS

  $4.0\ 10^9$ TEV/SEC INCLUDING DEPOSIT IN QUADS
  DOMINANT SOURCE

(Mokhov)

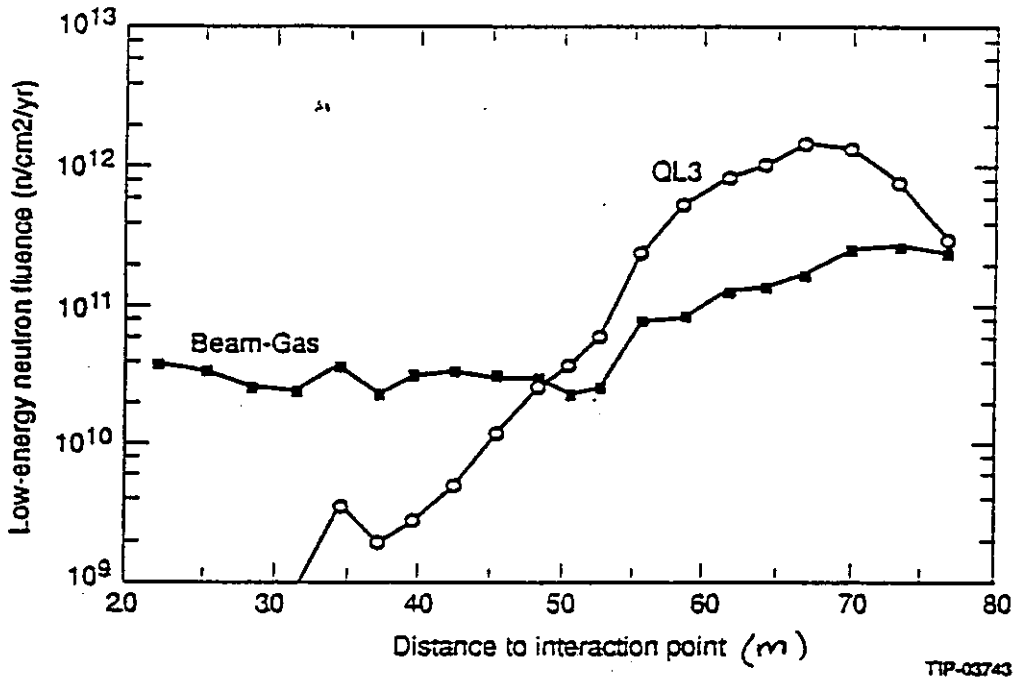

- $5 \cdot 10^4$ protons/meter/sec lost @ 70 m
- 10^{-8} torr N_2 in warm beam pipe

  $4 \cdot 10^8$ N_2/cm^3 in cold beam pipe
- $5 \cdot 10^{10}$ $n/cm^2/sscy$ from beam gas in tracker
- NEGLIGIBLE W.R.T. P-P COLLISIONS

Beam loss	$4.0 \cdot 10^{1}$ TeV/sec
Beam gas	$3.4 \cdot 10^{7}$ TeV/sec
FCAL	$1.4 \cdot 10^{8}$ TeV/sec
COLL	$1.1 \cdot 10^{9}$ TeV/sec

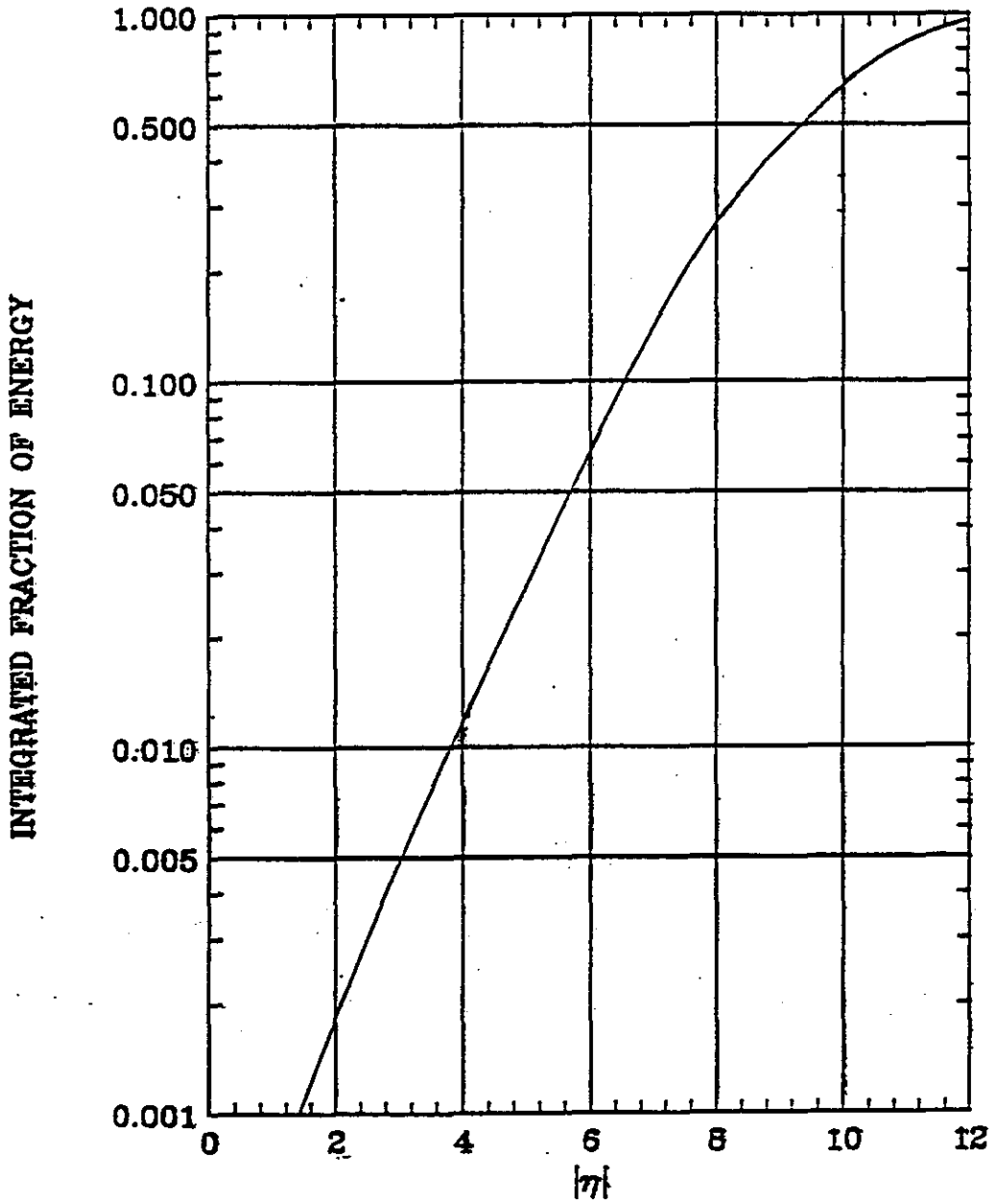

	$\lvert\eta\rvert$	% Energy
Barrel	0 - 1.3	0.1
EndCap	1.3 - 3.0	0.5
FCAL	3.0 - 5.5	3.5
Collimator	5.5 - 8.6	28.0

(FISSYAK)

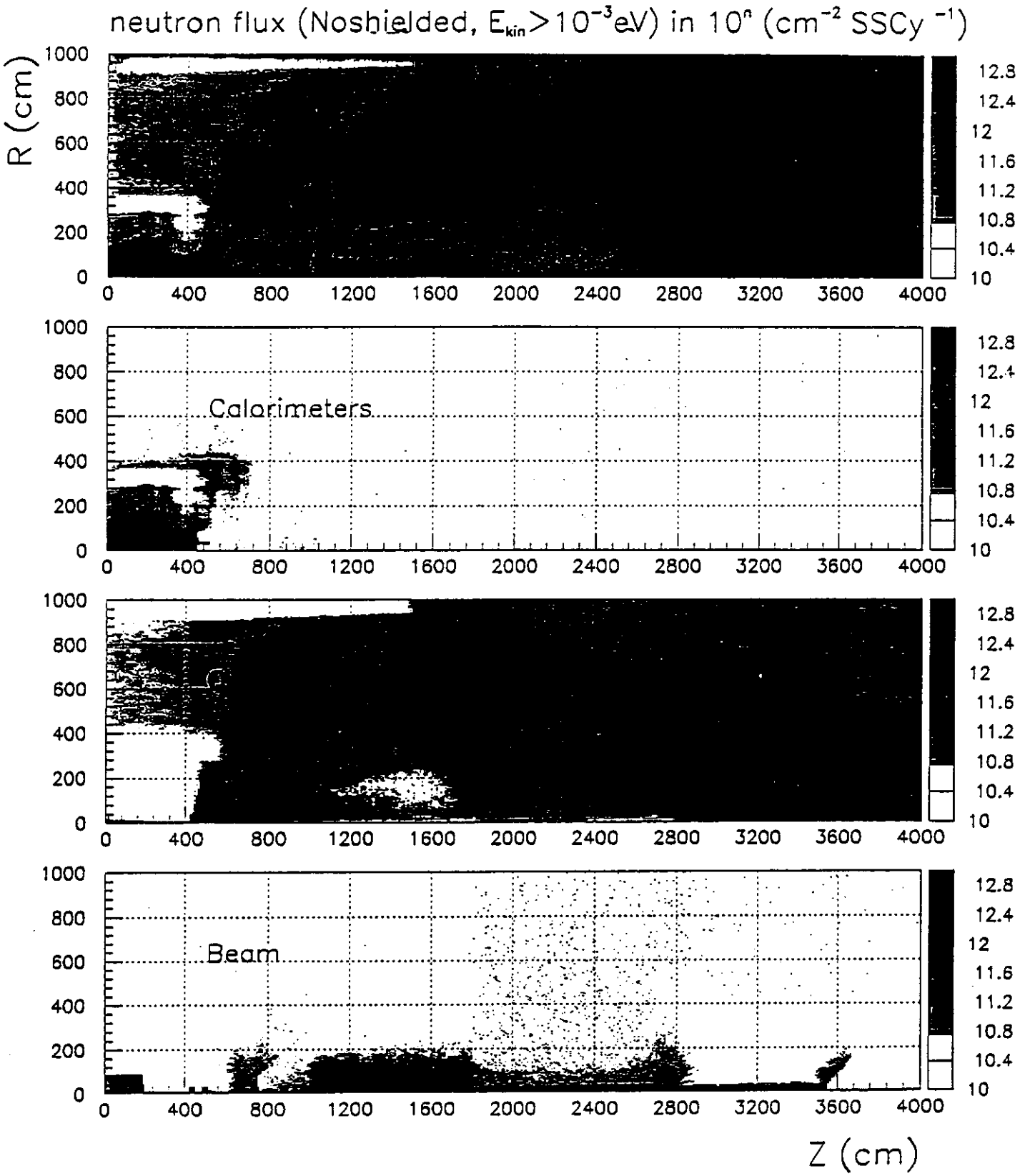
neutron flux (Noshielded, $E_{kin}>10^{-3}$eV) in 10^n (cm^{-2} $SSCy^{-1}$)
R (cm)
Calorimeters
Beam
Z (cm)

SHIELDING CONSIDERATIONS

- LOCATION AND APERTURE OF COLLIMATOR

  BACKGROUNDS INSENSITIVE TO EXACT VALUES
  HEAT LOAD LIMIT ON QUADS ⇒ 25MM APERTURE

- SHIELDING OF COLLIMATORS

  HIGH ENERGY HADRON SUPPRESSION INSENSITIVE
  THERMAL NEUTRONS SENSITIVE TO HYDROGEN
  ALBEDO TRAP NEEDED

- SHIELDING FOR FCAL

  DETAILED STUDY OF GEOMETRY
  VERTICAL CRYOSTAT CRACK
  PROJECTIVE HOLE

- BEAM PIPE

  AS LITTLE MATERIAL IN CENTRAL TRACKER
  PROJECTIVE GEOMETRY BEHIND FCAL

- BENCH MARK NUMBERS

  MUON SYSTEM 6 10^{10} n/cm^2/SSCY
  (except above FCAL 5 10^{11} n/cm^2/SSCY)

  MUON PHOTON:NEUTRON 1:1

  CENTRAL TRACKER 5 10^{11} n/cm^2/SSCY
  CENTRAL TRACKER PHOTON:NEUTRON 1:1

HEAT LOAD to QL1

Aperture	(mm)	25	42	∞
Heat in QL1	(watts)	21	40	85
Lifetime	(Yr)	7	5	1.5

- set aperture to 25 mm. safety factor 2
- z location - Collimator face @ 32 m
  3m deep collimator
  QL1 @ 35.5 m
  Mainly driven by shielding, eng.
- Long (5m concrete) Albedo trap
- Beam pipe shield (0.5m concrete) from FFS

FCAL shielding

(Moore)

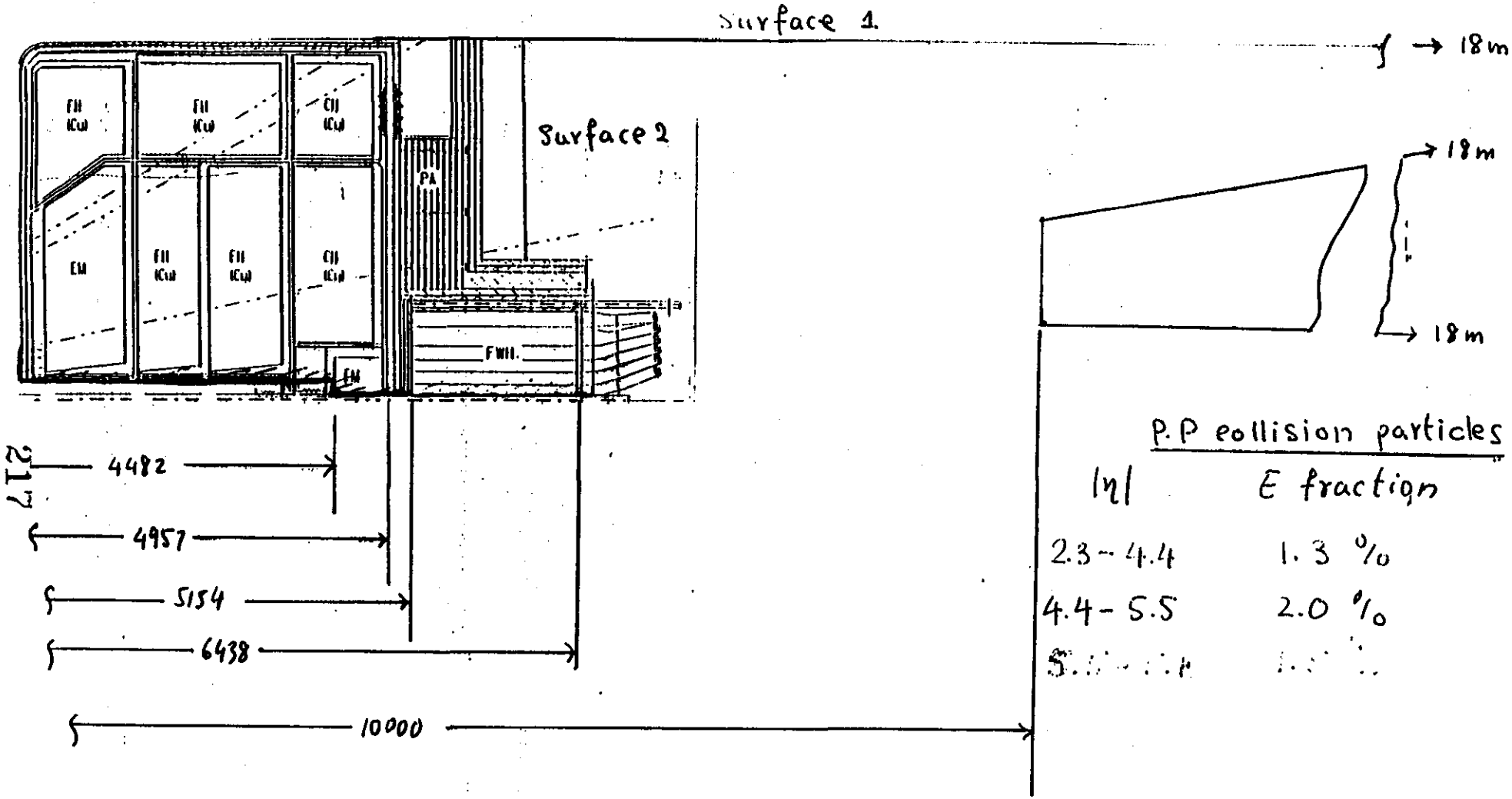

p.p collision particles

$\lvert\eta\rvert$	E fraction
2.3 – 4.4	1.3 %
4.4 – 5.5	2.0 %
5.[illegible]	[illegible]

Neutron crossings per second

$\lvert\eta\rvert$		vacuum gap	Cu in gap
2.3 – 4.4	Surface 1	$\sim 10^4$	$< 10^4$
	Surface 2	$4.0 \cdot 10^5$	$< 10^4$
4.4 – 5.5	Surface 1	$4.0 \cdot 10^5$	$4.0 \cdot 10^4$
	Surface 2	$6.2 \cdot 10^6$	$2.0 \cdot 10^5$
5.5 – 5.8	Surface 1	$3.1 \cdot 10^6$	$2.6 \cdot 10^6$
	Surface 2	$1.7 \cdot 10^7$	$1.8 \cdot 10^7$

- Cu in cryostat reduces

  $2.3 \cdot 10^7$/surface 2 $\xrightarrow[20\,\%]{}$ $1.8 \cdot 10^7$/surface 2

- Either projective between $5.5 < \lvert\eta\rvert < 5.8$

  or heavy shielding between FCAL FFS

  $2.3 \cdot 10^7$/surface 2 $\xrightarrow[74\,\%]{}$ $6.2 \cdot 10^6$/surface 2

FCAL considerations 3/15/93

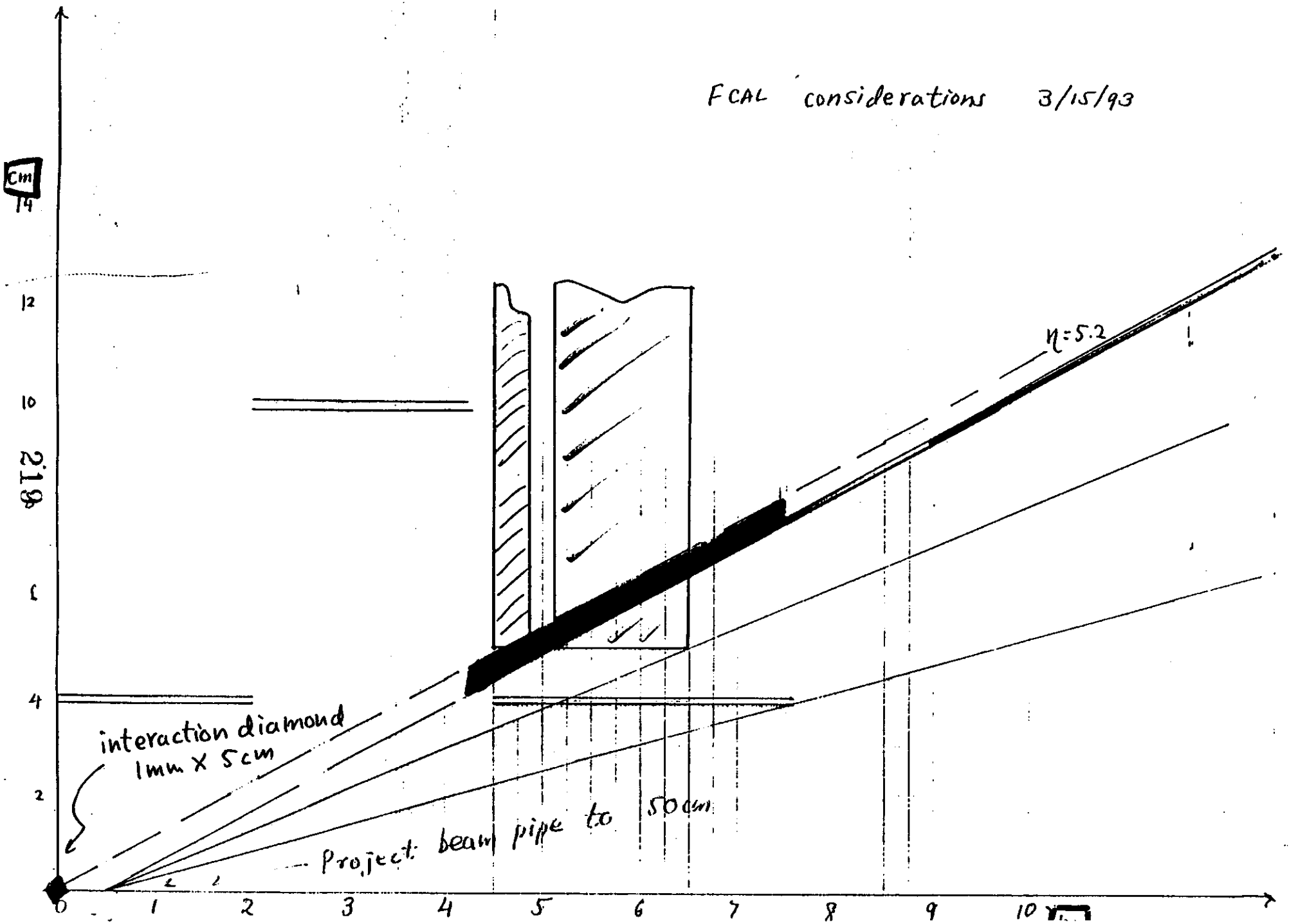

219

BEAM PIPE FLARE

(waters)

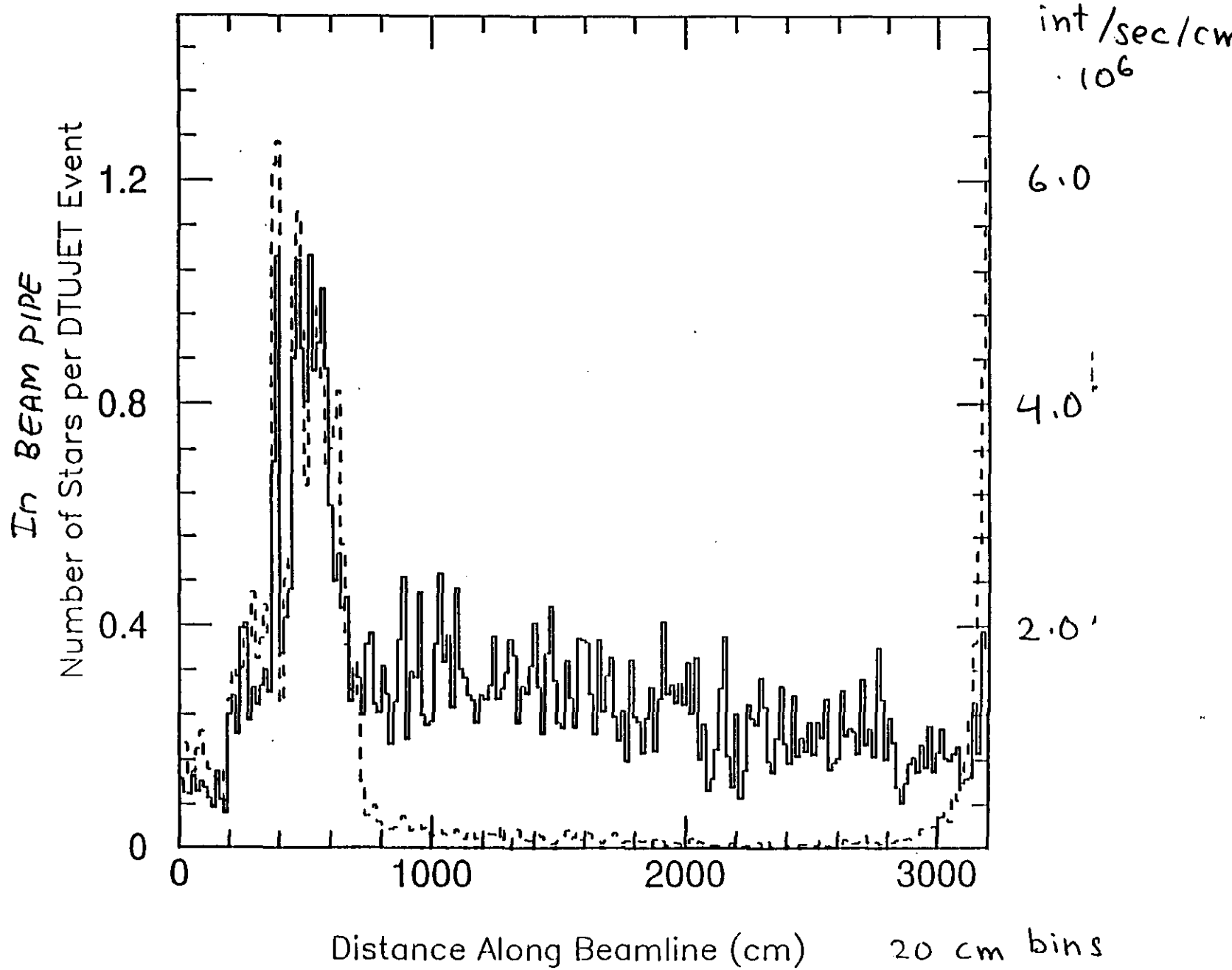

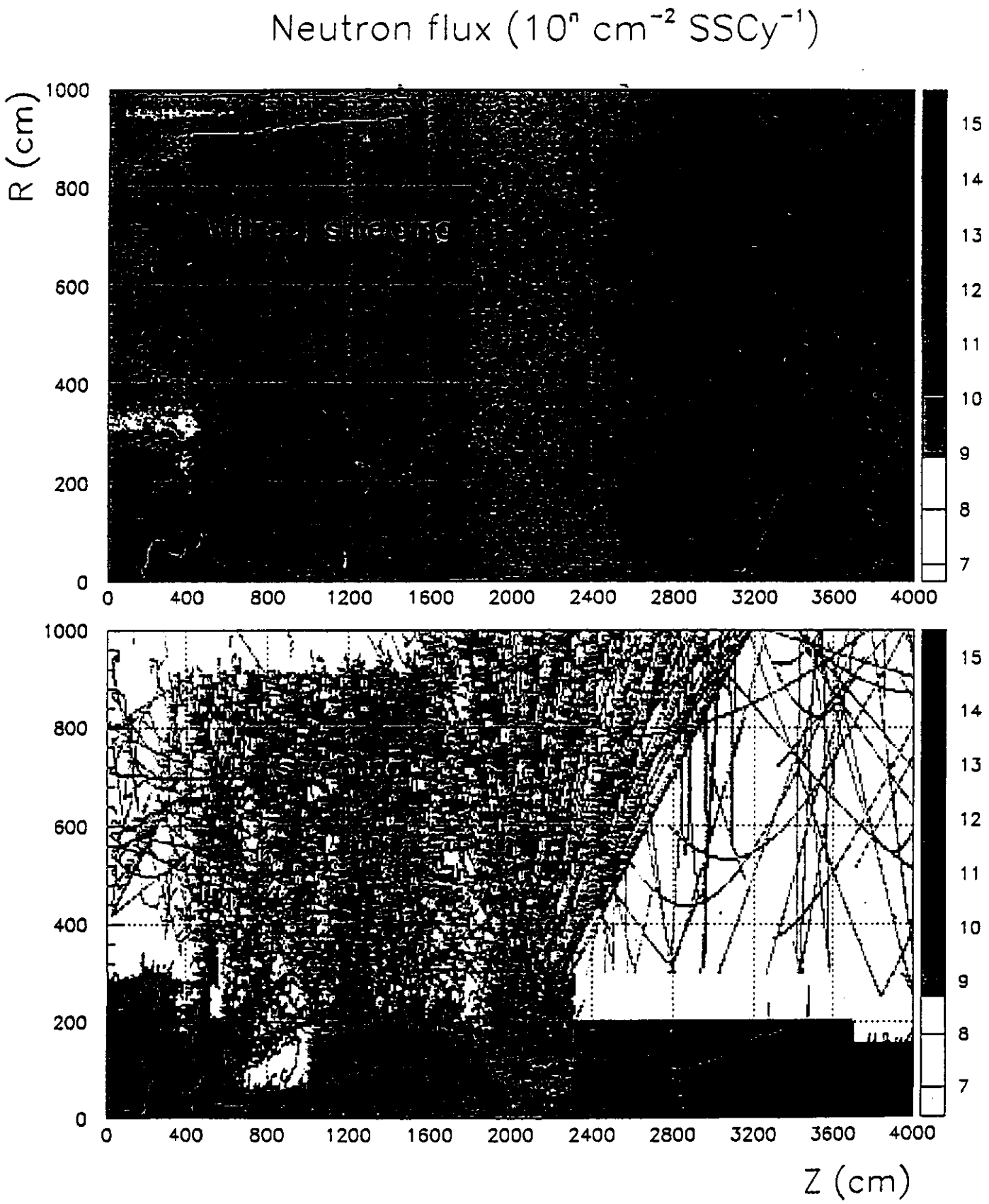
Neutron flux (10^n cm^-2 SSCy^-1)
R (cm)
Z (cm)
0
200
400
600
800
1000
0
400
800
1200
1600
2000
2400
2800
3200
3600
4000
7
8
9
10
11
12
13
14
15

(Fissiak

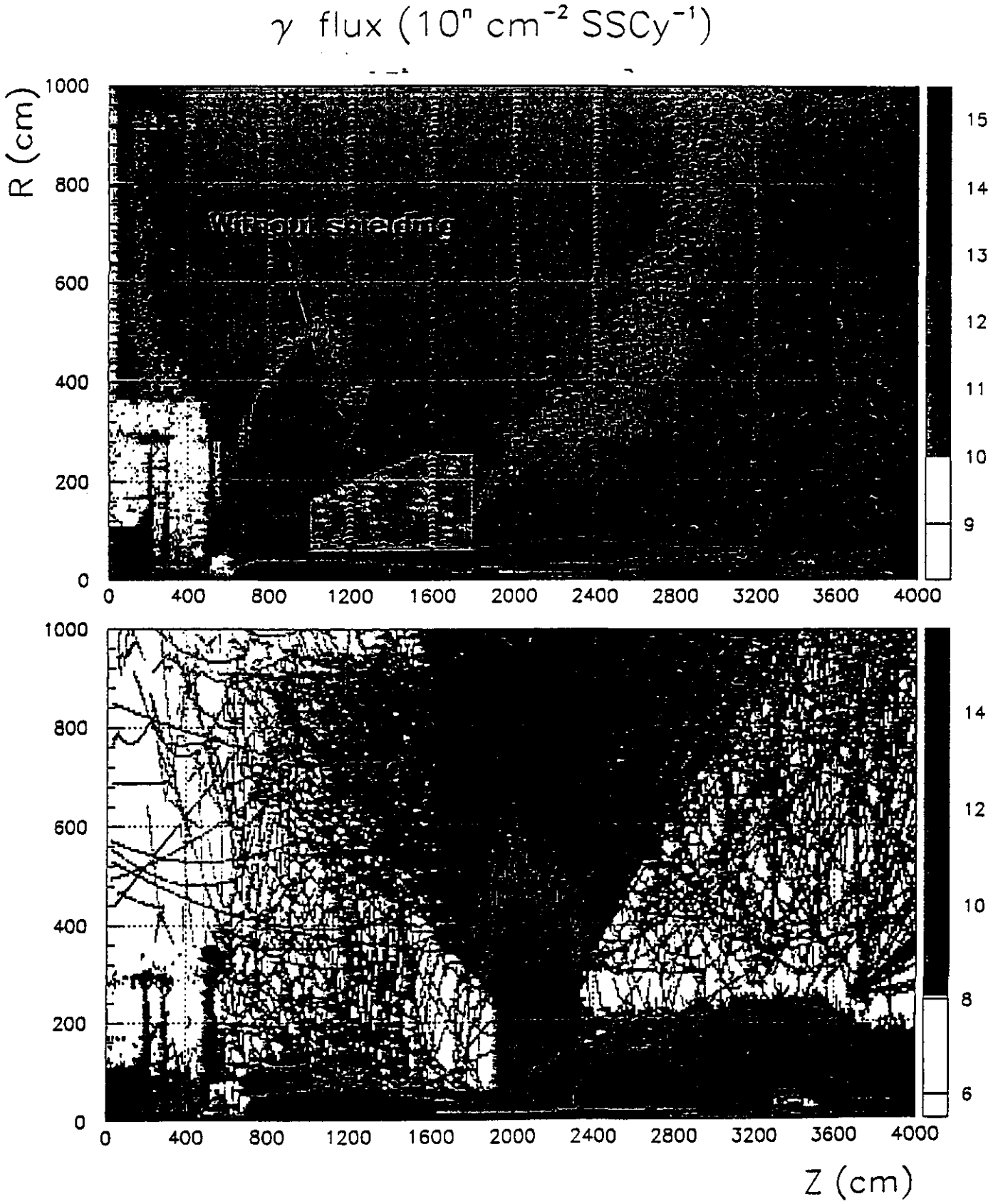

(Tissiak.)

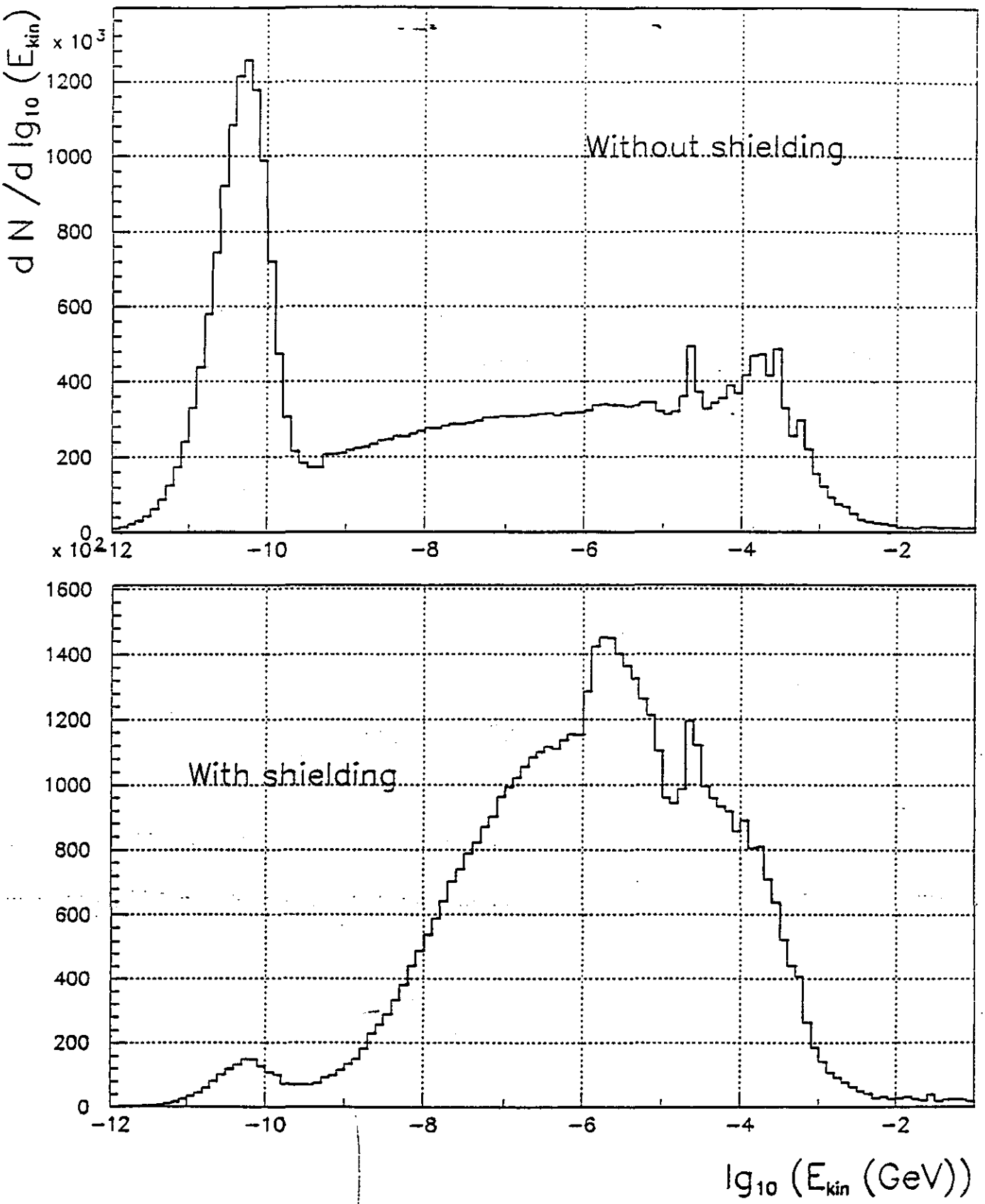
d N / d lg10 (Ekin)
x 10^3
1200
1000
800
600
400
200
0
x 10^2
Without shielding
-12
-10
-8
-6
-4
-2
1600
1400
1200
1000
800
600
400
200
0
With shielding
lg10 (Ekin (GeV))

CENTRAL TRACKER FLUENCES

- ALBEDO NEUTRONS

SCALING LAWS	$1/R^2$	R	CAVITY RADIUS
	(1+A)	A	REFLECTIONS

BORATED POLYETHYLENE IN FRONT OF CALORIMETER
X 20 REDUCTION

FLUENCE $5\ 10^{11}$ /cm^2/SSCY
CONSTANT WITHIN X 2 THROUGHOUT VOLUME

- PHOTON FLUX

ELECTROMAGNETIC ALBEDO	$5.0\ 10^{12}$ /cm^2/SSCY
n ABSORBTION	few 10^{12} /cm^2/SSCY

ADDITION OF BORATED POLY DOES NOT CHANGE
PHOTON FLUX BY MORE THAN FACTOR OF 2

Fisvak

/cm²/SSCY

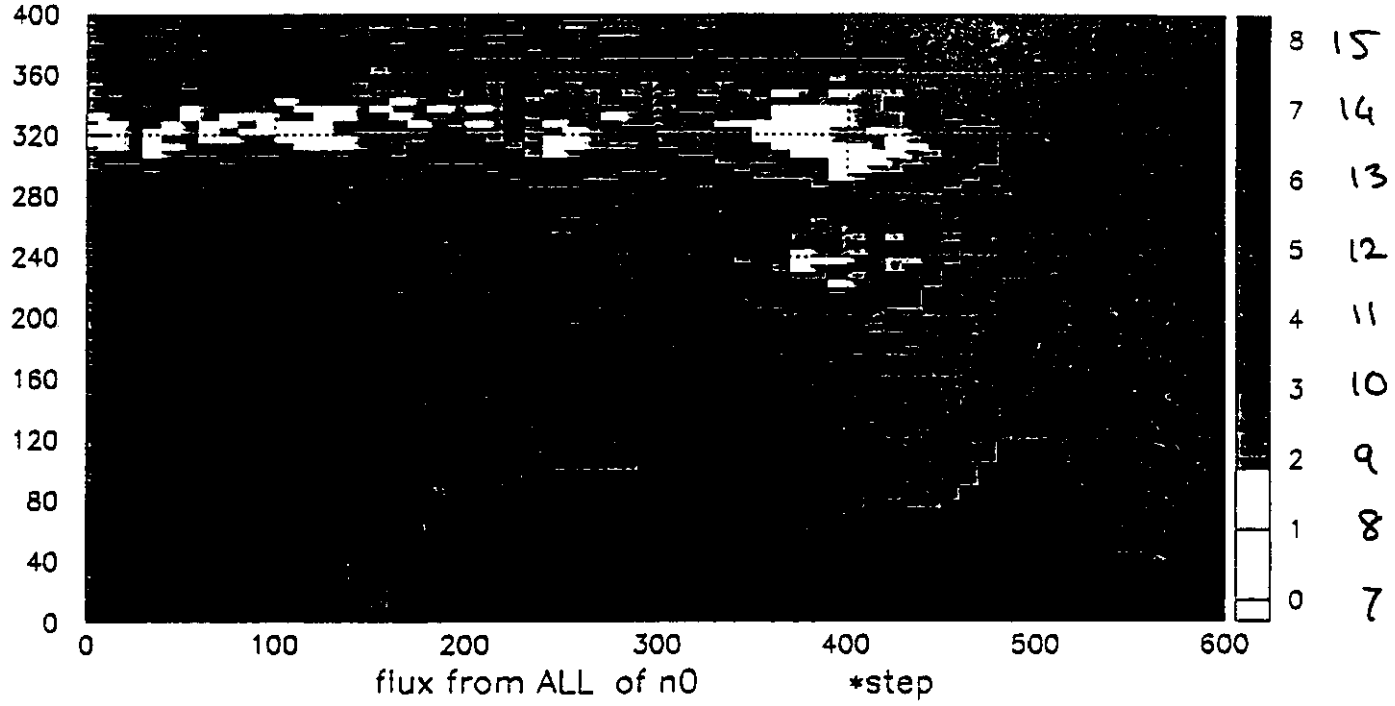

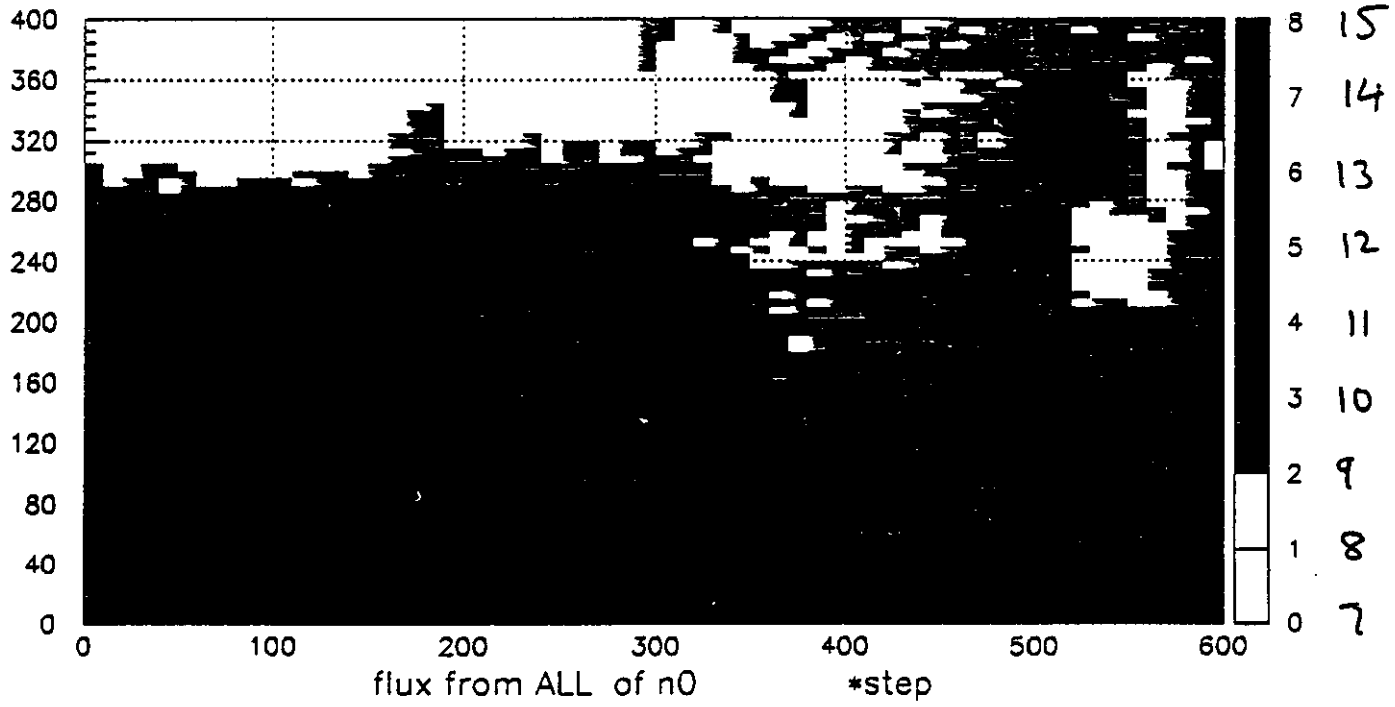

/cm²/ssc

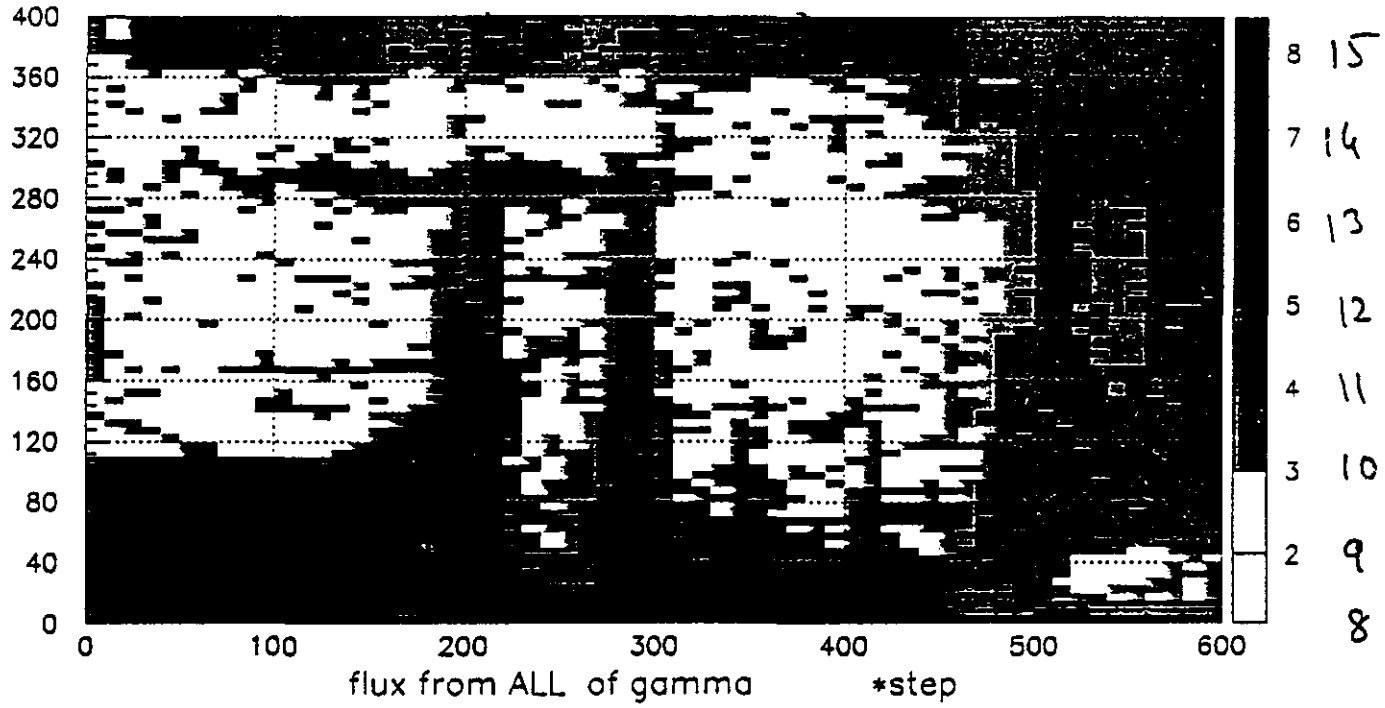
400
360
320
280
240
200
160
120
80
40
0
0
100
200
300
400
500
600
flux from ALL of gamma *step
8 15
7 14
6 13
5 12
4 11
3 10
2 9
8

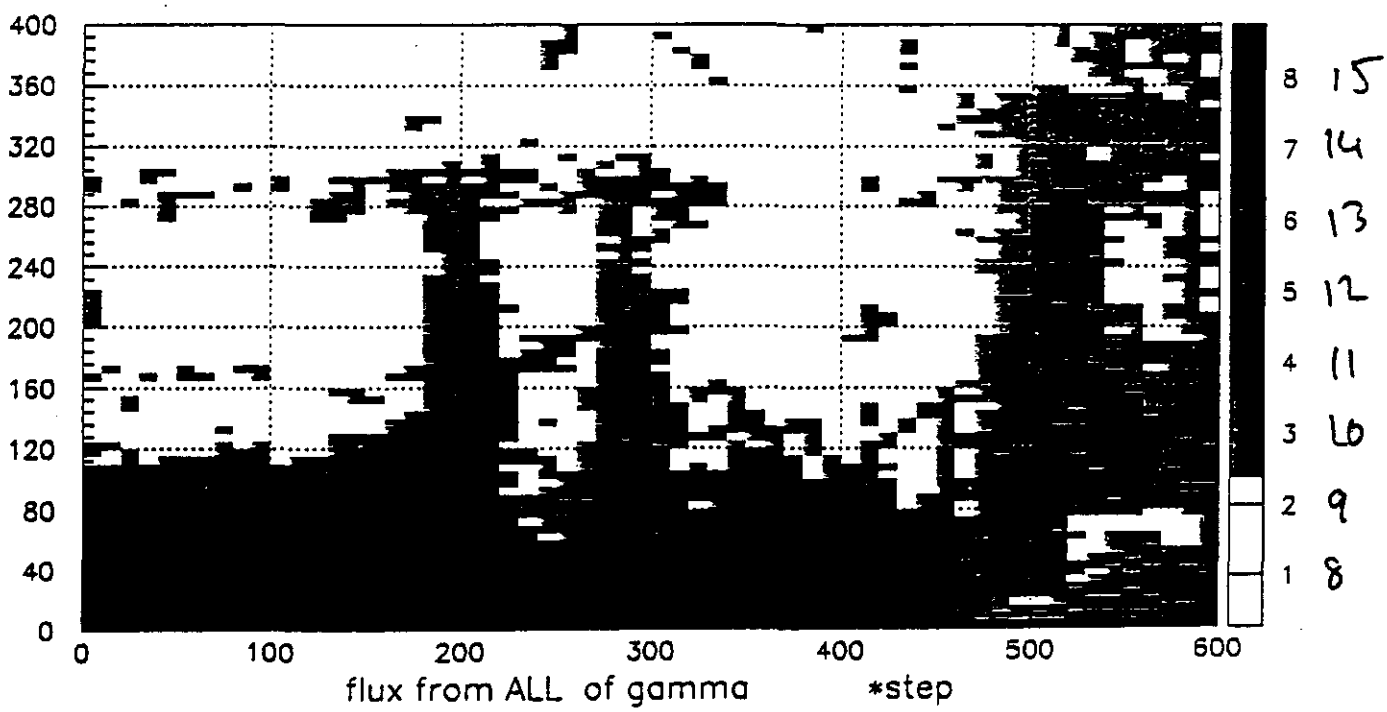
400
360
320
280
240
200
160
120
80
40
0
0
100
200
300
400
500
600
flux from ALL of gamma *step
8 15
7 14
6 13
5 12
4 11
3 10
2 9
1 8

TOTAL RADIATION DOSE

- dE/dx CHARGED PARTICLE DOSE

  RELEVANT FOR CENTRAL TRACKER
  AT 10 CM FROM BEAMPIPE 0.4 MRAD/SSCY

- ELECTROMAGNETIC DOSE

  FORWARD CALORIMETER 400 MRAD/SSCY

- HADRONIC DOSE

  FORWARD CALORIMETER 10 MRAD/SSCY

- NEUTRON INDUCED DOSE IN TERMS OF FLUENCE

  CENTRAL TRACKER
  E_n>100KeV $5\ 10^{11}$ n/cm^2/SSCY

  FORWARD CALORIMETER 10^{15} n/cm^2/SSCY

  MUON SYSTEM $5\ 10^{11}$ n/cm^2/SSCY MAXIMUM

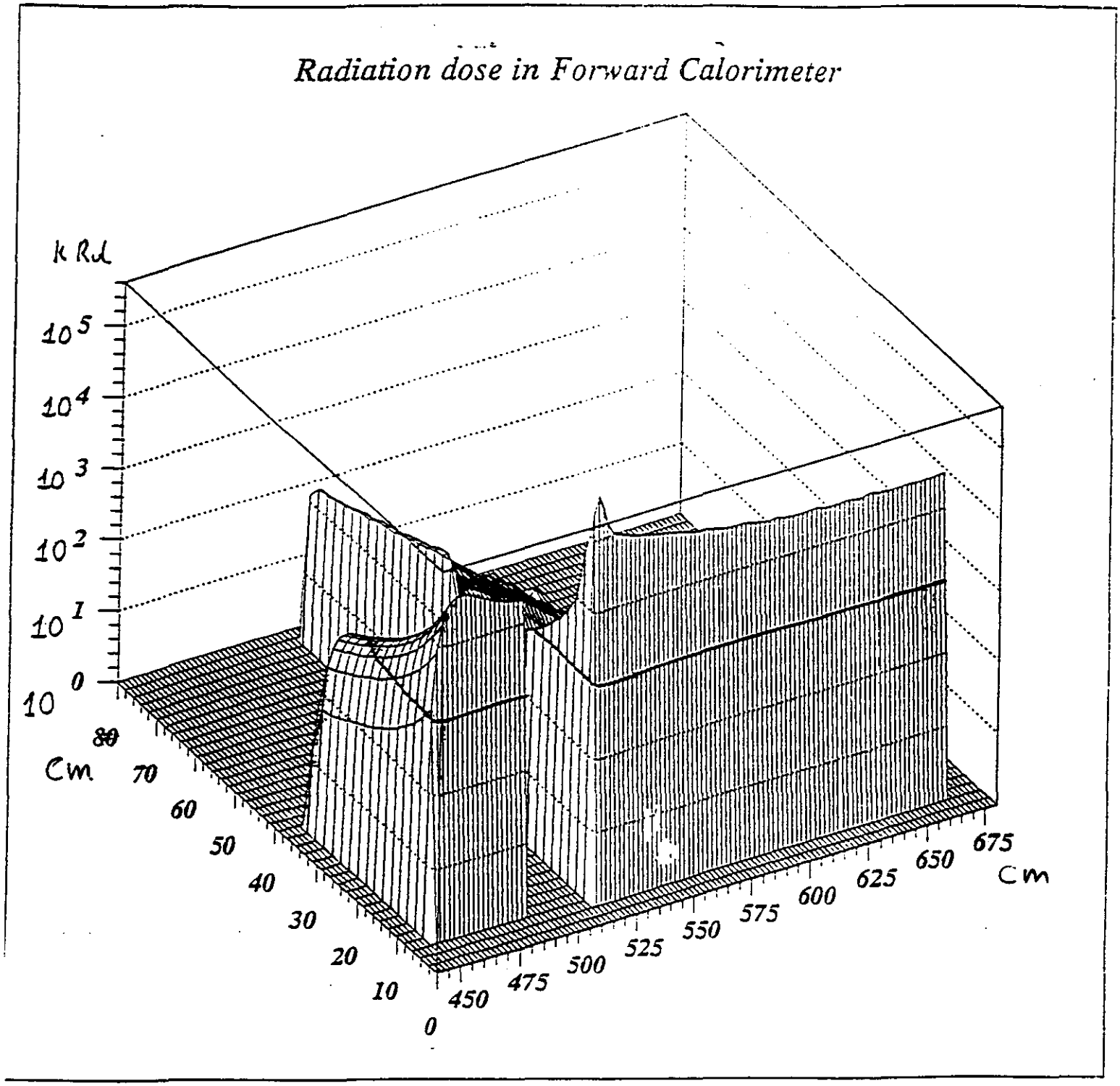

Yuri Efremenko/ORNL

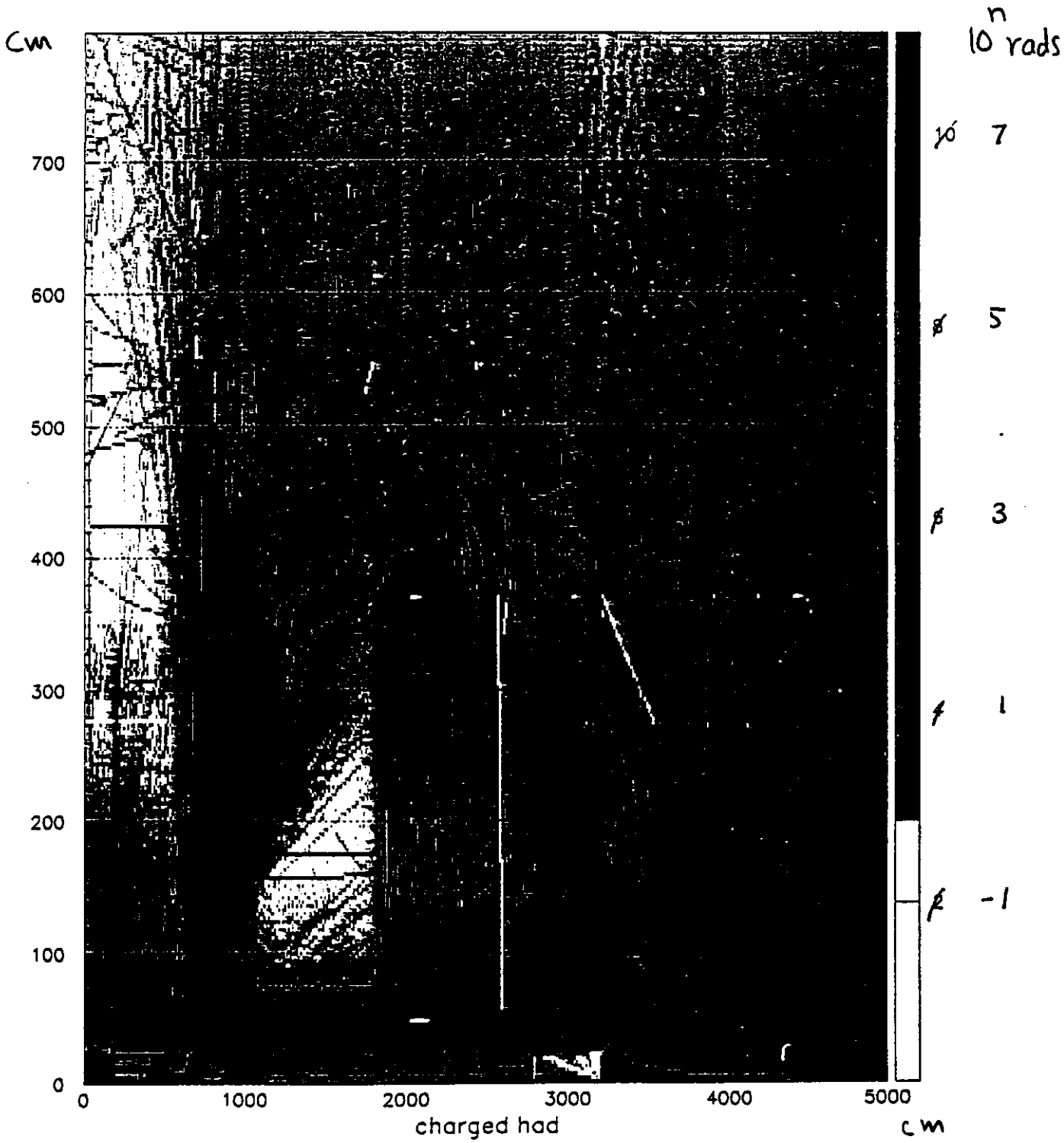
Cm
700
600
500
400
300
200
100
0
0
1000
2000
3000
4000
5000
charged had
cm
10^n rads
7
5
3
1
-1

ACTIVATION DOSE

- SPALLATION IN HADRONIC CASCADES

  RELEVANT IN CALORIMETERS
  APPROXIMATELY THE SAME FOR ALL HEAVY METALS

- LOW ENERGY NEUTRON ABSORBTION

  RELEVANT IN BOTH CALORIMETERS AND MUON SYSTEM
  HIGHLY MATERIAL DEPENDENT

- CINDER90 CALCULATION

  INCLUDES BOTH CONTRIBUTIONS
  AIR ACTIVITY ALSO CALCULATED

- ROUGH CALCULATIONS FROM STAR DENSITIES AND NEUTRON FLUENCES AT SATURATION ON CONTACT

FCAL	< 10 Rem/hr
COLLIMATOR	< 100 Rem/hr
BARREL AND ENDCAP	< 20 mRem/hr
VACUUM PUMP	< 40 mRem/hr

- HIT OCCUPANCY AND PILE UP

  MUON SYSTEM FROM CU ACTIVITY
  < 0.03 % ASSUMING 6 10^3 thermal n/cm^2/sec

  CALORIMETER
  NEGLIGIBLE PILEUP DUE TO KRYPTON ACTIVITY

(Waters)

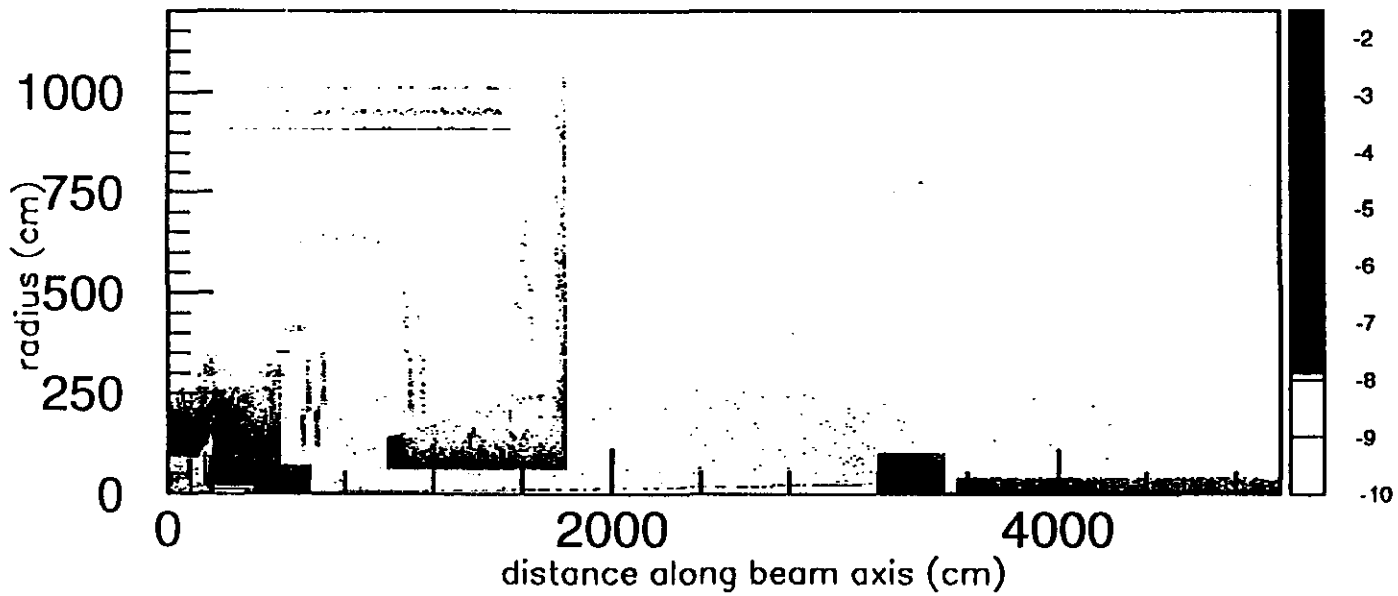

Rem/hr

10
1
0.1
0.01
10^{-3}

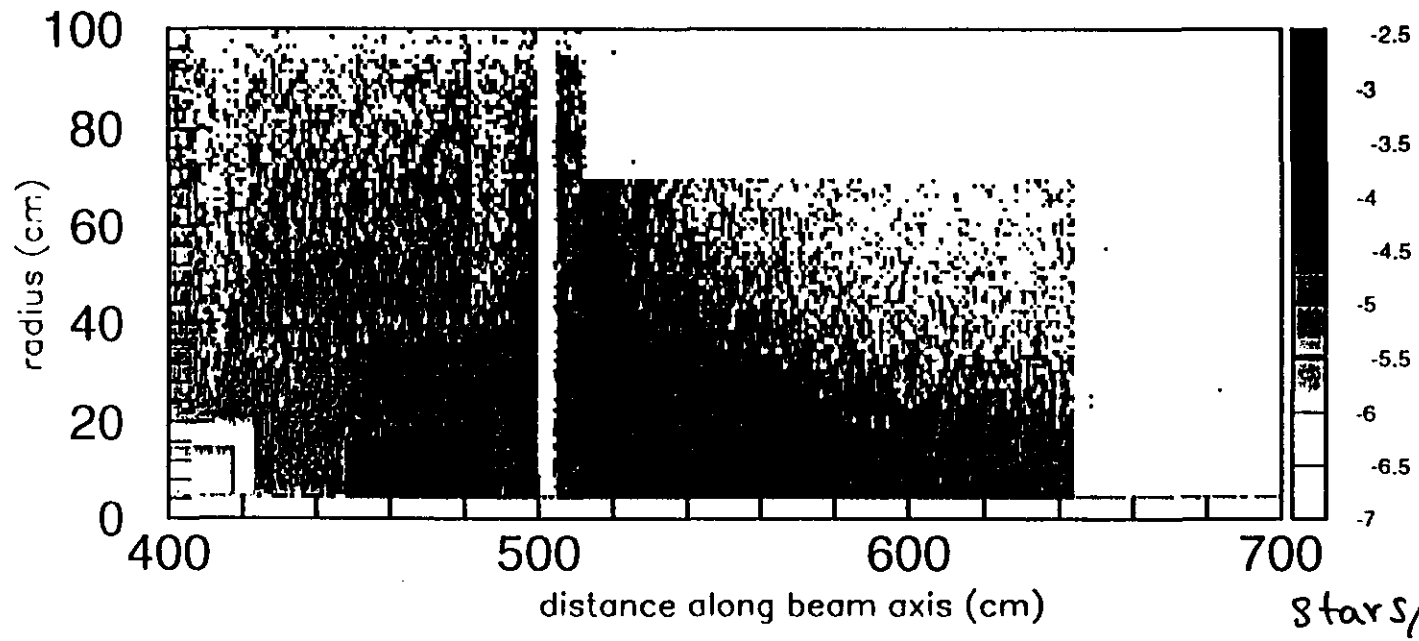

10
1
0.1
0.01

stars/cm³/mnb evt.

SUMMARY

- MUON SYSTEM WILL FUNCTION AT 10^{34} cm^{-2} sec^{-1}
- CENTRAL TRACKER WILL FUNCTION FOR 1 YEAR AT 10^{34} cm^{-2} sec^{-1}. LIMITATION IS CHARGED DOSE.
- SUFFICIENT ACTIVATION TO REQUIRE SPECIAL HANDLING OF PARTS NEAR THE BEAM.
- FURTHER OPTIMIZATION OF SHIELDING AROUND COLLIMATOR
- FURTHER OPTIMIZATION OF GEOMETRY AND SHIELDING AROUND FCAL

(Garrilov)

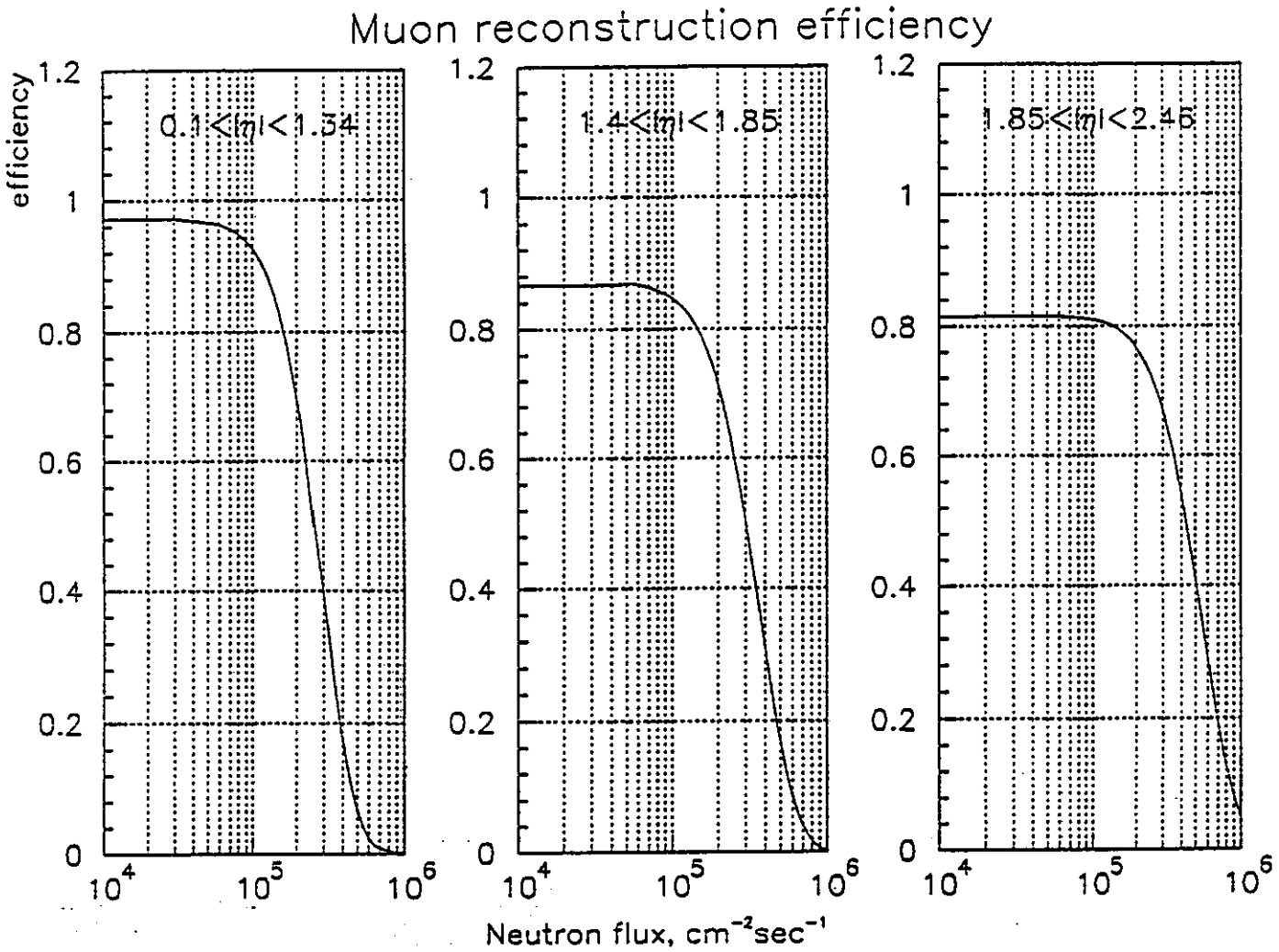
Muon reconstruction efficiency
efficiency
0.1<|η|<1.34
1.4<|η|<1.85
1.85<|η|<2.45
1.2
1
0.8
0.6
0.4
0.2
0
10^4
10^5
10^6
Neutron flux, $cm^{-2}sec^{-1}$

(Gavrilov)

Muon chamber rates (Hz/cm²)

Neutron flux: $10^4 n \cdot cm^{-2} sec^{-1}$
(thermal / fast ⇒ 1 : 1)

$\gamma/n = 0.2$

$\Delta\tau = 0.3\ \mu sec$

SL	neutrons		gamma	occ./strip
	thermal	fast		
Inner	3	1.5	12	0.11%
Middle	3.4	2.3	15	0.18%
Outer	3.8	3	18	0.35%

Table 4.5. Isotopes that could contribute to accelerator radioactivity by thermal neutron activation. The dose rates at 1 m are per Bq of the active isotope and per g of the natural parent element irradiated to saturation in a thermal neutron flux of 1 n.cm^{-2}.s^{-1}.

Parent isotope	Natural (%)	σ (barn)	Active isotope	Half-life	fSv.h^{-1} at 1 m per Bq	fSv.h^{-1} at 1 m per g
^{23}Na	100	0.53	^{24}Na	15 h	560	7.7
^{40}Ar	99.6	0.61	^{41}Ar	1.8 h	150	1.4
^{44}Ca	2.0	0.70	^{45}Ca	165 d	–	–
^{50}Cr	4.3	17	^{51}Cr	28 d	4	0.04
^{55}Mn	100	13	^{56}Mn	2.6 h	250	35
^{59}Co	100	37	^{60}Co	5.3 y	340	128
^{63}Cu	69	4.5	^{64}Cu	13 h	28	0.84
^{64}Zn	49	0.46	^{65}Zn	245 d	76	[illegible]
^{121}Sb	57	6.1	^{122}Sb	2.8 d	60	1.0
^{123}Sb	43	3.3	^{124}Sb	60 d	200	1.4
^{133}Cs	100	31	^{134}Cs	2.1 y	116	17
^{151}Eu	48	8700	^{152}Eu	12 y	45	750
^{153}Eu	52	320	^{154}Eu	8 y	286	190
^{186}W	28	40	^{187}W	1 d	73	2.6

K, β⁻, β⁺

K, β⁺

β⁻

int/cm³/sec = 10^5 n/cm²/sec · 1 g/cm³ / 63 · $6 \cdot 10^{23}$ · $4.5 \cdot 10^{-24}$ cm²

Activity at saturation = interaction rate

= $4 \cdot 10^{7}$ cm³/sec

Outside → strip area ≈ 500 cm × 1 cm

Δt = $0.4 \cdot 10^{-4}$ sec

Occupancy = [illegible] % · 0.7 = 0.5 %

gem

γeμ

Presentation by:

C. Baltay

C. Baltay

GEM ORGANIZATION PLAN

Version Presented to the Collaboration Council for Approval

April 5,1993

The GEM collaboration is made up of individual members (collaborators) and collaborating institutions. The Organization includes a Collaboration Council, a Spokesman or Spokesmen, an Executive Committee, an International Committee, a Project Manager with a management office, and Subsystem Organizations. The interrelationship of these components are indicated in the GEM Organization Chart.

This Organization Plan is designed primarily for the period after the approval of the GEM Technical Design Report. In the past there has been an evolution of several interim organizations. The first one, with two Cospokesmen and a Steering Committee, prepared the GEM EOI (Expression of Interest). The second, adding the Collaboration Council, prepared the GEM LOI (Letter of Intent). The third interim organization, which is in effect at this time, is preparing the GEM Technical Design Report. It consists of two Spokesmen, the Collaboration Council, the Executive Committee, an Acting Project Manager, and an initial set of Subsystem Groups. The intention is that the present interim organization will evolve smoothly into the final GEM Organization described in this Plan. This Plan is expected to undergo further changes at the end of the construction phase of the detector, when GEM turns into an operating experiment.

The "GEM Project Management Plan" that will be developed by GEM, the SSC Laboratory, and DOE will go into more detail on the formal management of the Project.

1. Membership

Scientists with an interest in the research program of the SSC (Ph.D. physicists, graduate students, and engineers) of any nationality are eligible to be members of the GEM Collaboration provided that they are contributing a significant fraction of their research effort (averaged over a period of several years) to the GEM program.

Collaborating institutions can be universities, National Laboratories, or other institutions that have one or more members in the GEM collaboration. GEM collaborators may be involved in other experiments or activities, but are expected not to be members of approved competing SSC or LHC Experiments.

.2. The Collaboration Council

The GEM Collaboration Council will consist of one representative from each collaborating institution. The Collaboration Council will deal with general issues that concern the collaboration. It will serve as a forum for informing the collaboration and will provide input and guidance for all major scientific, technical and fiscal matters. In particular the collaboration, through the Collaboration Council, will approve the GEM Organization Plan, the Publication Policy, Management Plan, and other major concerns of the collaboration. It will also approve the selection of the Spokesmen, the Project Manager, the Executive and International Committees, and the Subsystem leadership. The Collaboration Council will have open meetings typically once every one or two months. The Collaboration Council, through its chairman, with consultation with the Spokesmen, will organize collaboration meetings typically twice a year.

a) The Collaboration Council Representatives will be chosen by each institution. The term of office of the Representatives will be at the pleasure of each institution.

b) The Collaboration Council will elect its own chairman. The chairman will guide the affairs of the Collaboration Council. In particular, he or she will organize and run the meetings of the Collaboration Council and the general Collaboration meetings; will be responsible for keeping an up to date list of the membership of the Collaboration and the Collaboration Council Representatives; and will administer the voting of the Collaboration Council on relevant issues.

   i) The term of office of the Collaboration Council chairman will be two years, not renewable.

   ii) Nominations for the chairman will be from the floor at a Collaboration Council meeting or by letter to the outgoing chairman.

   iii) The outgoing chairman will check that the nominees are willing to run, and distribute the ballot for vote by the Collaboration Council Representatives by mail or E-mail with at least two weeks notice.

   iv) If no candidate gets a majority, the top two candidates will stand for a run-off election.

3. The GEM Spokesmen

The Spokesmen will be responsible for the scientific, technical, fiscal, and managerial concerns of the Collaboration. It is their responsibility to have a well designed and functioning detector ready at the turn-on of the SSC. The Spokesmen, in consultation with the Executive Committee and the Project Manager, will direct the technical and engineering design, physics integration and technical implementation of the detector.

a) There will be one spokesman or two co-spokesmen as may be deemed appropriate by the Nominating Committee (see Paragraph c-i below).

b) The Spokesmen have a fixed 3-year term of office, with no prejudice or limit on the number of terms served.

c) The Spokesmen will be selected, soon after the GEM Technical Design Report is approved, by the following process:

   i) There will be a Nominating Committee consisting of 9 members of the GEM Collaboration. Of the 9 members, 4 will be chosen by the Collaboration Council, 2 by the SSC Laboratory, and 3 will be selected by the Executive Committee to provide balance. The Nominating Committee will select its own chairman.

   ii) The Nominating Committee will consult extensively with members of the collaboration, the present interim Spokesmen, the SSC Laboratory, the subsystem leaders, etc., etc. and will nominate a single slate.

   iii) The slate thus nominated will be put up for approval or rejection by the Collaboration Council. The chairman of the Collaboration Council will solicit one vote from each Collaboration Council Representative by mail or E-mail, allowing at least two weeks between the presentation of the slate and the balloting. A majority vote will be required for approval.

d) This selection process will be repeated every three years. A new Nominating Committee will be constituted each time as specified in Section 3-c-i above.

e) A petition signed by two thirds of the Executive Committee or a two thirds vote of the Collaboration Council can trigger this selection process at any time under unusual circumstances.

4. The Executive Committee

The Executive Committee will advise the Spokesmen and the Project Manager on scientific, technical, fiscal and managerial decisions relevant to the design, construction and operation of the GEM Detector. The Executive Committee will serve as the Configuration Change Control Board.

a) The Executive Committee will consist of between twelve and eighteen members of the GEM Collaboration. The members of the Executive Committee will be nominated by the Spokesmen after wide consultation with the collaboration. The nominated slate will be approved or rejected by the Collaboration Council (using the procedure of Section 3-c-iii above).

b) The terms of office of the Executive Committee will be the same as that of the Spokesmen.

c) The Project Manager, the GEM Chief Engineer, the chairman of the Collaboration Council, and the leaders of the various GEM Subsystems will be members of the Executive Committee.

d) The Spokesmen will serve as chairmen of the Executive Committee.

e) The Executive Committee will meet at least once every one to two months.

f) The membership of the Executive Committee can be re-evaluated by the Spokesmen as appropriate, with the approval of the Collaboration Council.

5. The GEM Project Manager

The responsibility of the Project Manager is to provide technical, administrative,management, and budget coordination to insure the efficient and timely construction of the GEM detector. The Project Manager is responsible to both the GEM Spokesmen and Executive Committee and the SSC Laboratory Management. The Project Manager is also the head of the SSC GEM Project Department.

a) The Search Committee for the Project Manager will consist of

i)The Chairman of the Collaboration Council

ii) Two SSC Lab representatives chosen by the SSC Lab management

iii)Four or five other members, including the chairman of the search committee, selected by the GEM Spokesmen.

b) The search committee will conduct a search for a candidate for Project Manager, with extensive consultation with members of the Collaboration, the SSC Lab, the DOE, and the GEM Subsystem Leaders. It is possible that one of the Spokesmen will be proposed as a candidate for Project Manager. The single candidate selected by the search committee will be approved or rejected by the Collaboration Council (same procedure as defined in Section 3-c-iii above).

c) It is anticipated that the Project Manager will serve with indefinite term to the completion of the construction of the GEM detector. However, the Spokesmen or the SSC Lab can initiate the formation of a new Search Committee at any time if necessary.

6. The GEM Chief Engineer

The GEM Chief Engineer is responsible to work with the GEM Spokesmen and the Executive Committee, and the Project Manager, to develop the engineering design for the detector, the detector experimental hall and the detector support infrastructure, and to carry out that design in an efficient and timely fashion. .

a) The Chief Engineer will be nominated by the Spokesmen and the Project Manager after extensive consultation with the Gem Executive Committee and the SSC Laboratory Management. The nominee will be approved or rejected by the Collabration Council (using the proceedure of Section 3-c-iii).

b) It is anticipated that the Chief Engineer will serve with indefinite term to the completion of the GEM detector. However the Spokesmen can initiate a new nomination process if necessary..

7. The International Committee

The International Committee will advise the Spokesmen on fiscal matters, especially in the area of international contributions, coordination of work responsibilities between various countries , international agreements,and other related issues.

a) The International Committee will consist of one or two members from each collaborating country.

b) The members of this committee will be selected by the Collaboration Council Representatives from each individual country after consultation with the GEM Spokesmen.

c) The terms of office of the International Committee members is up to each individual country. The spokesmen can suggest changes or additions as appropriate, with the approval of the Collaboration Council Representatives of the relevant country.

d) Initially the International Committee will be chaired by one of the GEM spokesmen. Later the Committee may wish to have a rotating chairman to be elected by the Committee; in this case the chairman of the International Committee will be a member of the Executive Committee.

8. The GEM Subsystems

The GEM detector, as far as design and construction is concerned, can be divided by the Spokesmen into a number of subsystems such as the Magnet, Calorimeter, Muon Detector, Central Tracker, Electronics, Computing, and Physics Simulations. Each subsystem organization will be coordinated by a Subsystem Leader, assisted by a Steering Committee, a subsystem Project Manager and a Subsystem Chief Engineer. Not all subsystems need to follow this structure, i.e. the Physics Simulations might not need a Chief Engineer etc. The Subsystem Leader will serve as the chairman of the Steering Committee.

a) The Subsystem Leaders will be nominated by the GEM Spokesmen, in consultation with the Collaboration,especially with members of each of the relevant subsystems. The nominated slate will be approved or rejected by the Collaboration Council (same procedure as in Section 3-c-iii above).

b) The term of office of the Subsystem Leaders is at the pleasure of the Spokesmen. The Spokesmen can recommend changes in Subsystem leadership under unusual circumstances, with the approval of the Collaboration Council.

c) The Subsystem Steering Committee and the Subsystem Project Manager, will be selected by the Subsystem Leader in consultation with the GEM Spokesmen, the GEM Project Manager, and the GEM Chief Engineer. The Subsystem Chief Engineer will be selected by the Subsystem Leader and the GEM Chief Engineer in consultation with the GEM Spokesmen and the GEM Project Manager. It is possible that the Subsystem Leader and the Subsystem Project Manager, or the Subsystem Project Manager and the Subsystem Chief Engineer, are the same person.

d) The Subsystem Leaders are primarily responsible to the GEM Spokesmen. The Subsystem Project Manager and the Subsystem Chief Engineer are responsible to their Subsystem Leader, and will be responsive to the GEM Project Manager and GEM Chief Engineer.

9. Admission of New Collaborators into GEM

a) Up to the time of the approval of the GEM Technical Design Report GEM will have an open membership policy.

i) Any qualified institution can join the Collaboration by notifying the Chairman of the Collaboration council or one of the Spokesmen of their intention in writing.

ii) New members can join an institution that is already a GEM Collaborator at the discretion of that institution. It is the responsibility of the Collaboration Council Representative from each institution to notify the chairman of the Collaboration Council of any changes in membership.

b) After the GEM Technical Design Report is approved the following procedures should be used for the admission of new collaborators to GEM:

i) A new institution that desires to join the collaboration should enter into negotiations with the GEM Spokesmen and possibly one of the Subsystem Leaders if appropriate to discuss the contributions and role of the new institution. If these negotiations reach a satisfactory conclusion the new institution should write a letter to the chairman of the Collaboration Council or to one of the Spokesmen stating their desire to join GEM, listing the individual members of their group, and explaining their anticipated role in GEM. The

chairman of the Collaboration Council will present their case at the next Collaboration Council meeting. A favorable vote from a majority of the Collaboration Council Representatives will be required for admission(using the proceedure of Section 3-c-iii above).

ii) Individuals who wish to join GEM at an institution that is already a GEM Collaborator can do so at the discretion of that institution. It is the responsibility of each Collaboration Council Representative to keep the chairman of the Collaboration Council informed of changes in membership at his or her Institution.

c) Withdrawal from the Collaboration. The membership of an individual collaborator will terminate when the Collaboration Council Representative from his or her institution informs the chairman of the Collaboration Council that that individual is no longer associated with GEM. An institution can withdraw from the collaboration (provided it has satisfied whatever construction responsibilities that it has agreed to) by informing the chairman of the Collaboration Council of its intention in writing.

10. Adoption of this Organization Plan.

This Organization Plan will go into effect when approved by a majority vote of the Collaboration Council (using the procedure of Section 3-c-iii).

11. Amendments to this Organization Plan

A petition for a change or amendment to this organization plan after it has been adopted can be initiated either by the Spokesmen or by a letter to the chairman of the Collaboration Council signed by at least 50 members of the collaboration. Following such a petition the Spokesmen in consultation with the chairman of the Collaboration Council will set up a committee to study the desirability of such a change and to draft a specific proposal. The change or amendment will go into effect when approved by a majority vote of the Collaboration Council (using the proceedure of Section 3-c-iii).

*
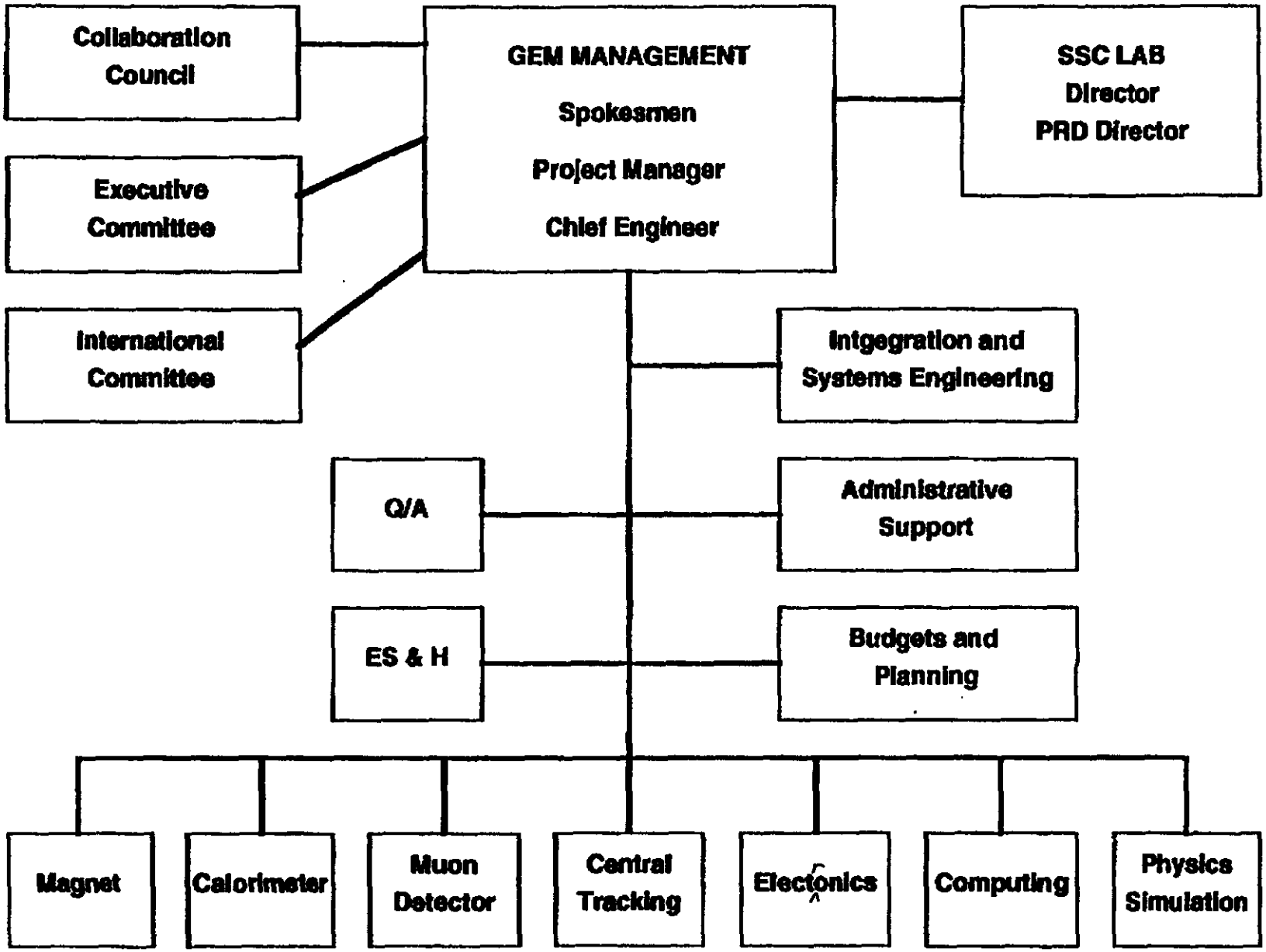
GEM ORGANIZATION