GEM TN-93-380

X-Ray Test Station for Cathode Strip Muon Chambers at SSCL Technical Proposal

Lawrence Livermore National Laboratory
Petersburg Nuclear Physics Institute
SSC Laboratory

March 31, 1993

Abstract:

A technical proposal on X-ray test station for the CSC's tests, calibration, and a superlayers local alignment at SSCL is presented. Design requirements are listed both for the Test Station and for a small pilot X-ray test station destined for the PNPI chamber production factory. A R&D program preceding the Test Station design and construction period are also discussed.

TN-93-???

March 31,1993

Lawrence Livermore National Laboratory,
Petersburg Nuclear Physics Institute,
Superconducting Super Collider Laboratory.

X-Ray Test Station for Cathode Strip Muon Chambers at SSCL
Technical proposal

Abstract

A technical proposal on X-ray test station for the CSC's tests,calibration, and a superlayers local alignment at SSCL is presented.Design requirements are listed both for the Test Station and for a small pilot X-ray test station destined for the PNPI chamber production factory.A R&D program preceding the Test Station design and construction period are also discussed.

1 Introduction

One of the advantages of the CSC's is the possibility to perform complete tests and high precision calibration of these chambers with an X-ray beam. Following the proposal formulated in GEM report [1],a special X-ray tube has been constructed at PNPI with the anticathode made of Pr and with monochromator selecting the $K_{\alpha 1}$-line of 36.03 keV energy (Fig.1). The beam parameters at the exit slit of the monochromator are as follows :
- beam size $5 \times 0.07mm^2$,
- beam divergency 30 μm,
- beam intensity $10^3 1/sec$.

The last value corresponds to the X-ray tube power of 3 watts (the half of the maximum tube power).Due to relatively high energy, the beam can penetrate through a Module of CSC's with reasonable attenuation (Fig.2).Therefore, all layers of the Module can be tested simultaneously.During the tests, some amount of Xe (25%) will be added to the gas mixture filling the CSC's. The K-edge of Xe is 34.56 keV, so the absorption of the 36 keV quanta by Xe atoms leads to production of short ranged photoelectrons with energy of 1.47 keV. In addition, some Auger electrons will be produced, so the total energy will be about 6 keV. The ionization produced by these low energy electrons will be concentrated in close vicinity to the X-ray beam. Therefore the beam profile measured with the CSC's should be narrow,and the center-of-gravity of this profile can be determined with high precision.

Recently, these ideas have been checked experimentally at PNPI [2]. The X-beam described above was directed on a prototype of CSC's. Fig.3 shows the beam profile measured with the CSC when the gas mixture contained 25% of Xe.The width of the measured profile proved to be FWHM=210 μm.The peak to background ratio was 60/1.The counting rate was $\sim 10sec^{-1}$. With 2900 signals, the peak position was determined with $\pm 2.2\mu$m precision.

A high precision Coordinate Measuring Machine widely in use at LLNL will be used in the calibrations of the CSC's(see Fig.4).The module equipped with the read out electronics and calibrated with pulse generator signals will be scanned by the X-ray beam across the cathode strips.The beam position X_{beam} will be controlled by the CMM with 5 μm precision. The CMM coordinate system will be related with the CSC reference points by observing the 10% increase of the counting rate when the beam is crossing the gap between the cathode strips in the vicinity of the reference points. In each scanning point (for example,each 1mm step) the peak position of the X-ray beam, X_{meas} will be measured with measurement accuracy of $\sigma \leq 10\mu$m,and the difference $X_{beam} - X_{meas}$ will be the calibration curve that takes into account all imperfections of the module (nonlinearity, misalignments, nonuniform capacity between strips, fluctuations in the values of the capacities at the input of the preamps used for calibration of the read out system with pulsed generator signals, etc.). All the layers in the module will be tested simultaneously,thus the relative alignment of the layers in a module will be strictly controlled.

The module or chamber calibration along the strips can be done as well,using anode signals.A geometrical layout of the X-ray beam positions relative to a chamber are shown in Fig.5.The X-ray beam turned by the right angle around its direction is placed in vicinity of a boundary between two neighbouring anode wire strips.The difference between the neighbouring anode counts is recorded as a coordinate function.The Fig.6 shows the behaviour of this function under assumption that a transition region width is about 100 μm, and the X-ray beam has

sharp edges and 70 μm width (solid line).A broken line corresponds to the zero transition region width. As the result of this calibration procedure,the module as whole should provide the best possible space resolution with minimum systematic errors in determining the track coordinate.

2 General

2.1. This proposal is a part of a program to provide SSCL and the CSC' production factories with X-ray test stations for tests and calibration.

2.2. We suggest here to design, and to construct the SSCL X-ray test station.To gain experience we propose to construct firstly a small pilot X-ray test station, bearing in mind to use it later for tests and calibration of small size CSC's produced at PNPI.

2.3. The Pilot Station has to suit for the tests of the Endcap smallest chambers.

2.4. The SSCL Test Station is supposed to be used at SSCL for the tests and calibration of the chosen chambers and modules of various size including the largest ones.

2.5. The Pilot Station design and construction should be finished by the end of December 1993.The first test results should be available by September of 1993.

2.6. The Test Station preliminary design is planned to start in April 1993.

2.7. Final Test Station design will be based on experience with the Pilot Station and is expected to begin in September 1993,to be finished by December 1993.

2.8. Construction of the Test Station would begin in January 1994.

3 The test stations design requirements

3.1.Both the Test Station and Pilot Station should provide $\pm 10\mu$m accuracy of the CSC's calibration in direction across the strips.The above quoted error is composed of $\pm 5\mu$m inaccuracy of the CMM length measurement and a statistical error.

3.2. The admissible CMM positioning error in direction along the strips is $\pm 20\mu$m.

3.3. A unit connecting the CMM bridge with the X-ray tube, assembled with the monochromator in common unit,should make it possible to adjust the X-ray beam around axis, directed along the strips, perpendicular relative to the CSC's entrance window with accuracy ± 0.3 mrad, and around vertical axis with accuracy ± 2 mrad.

3.4. The CMM measurement envelope for the Pilot Station should be not less than 0.94 m in length, and 0.54 m in width.A width clearance between the bridge pillars should be not less than 0.7 m.

3.5. The Test Station measurement envelope should be not less 3.5 m in length and 1.2 m in width.The width clearance has to be not less than 1.5 m.

3.6. A height clearance should be not less than 0.3 m for both devices.

3.7. The CMM tables should be provided with junction unit to install and keep steadily the CSC's during the test procedure.

3.8. The X-ray beam intensity should provide a possibility to perform the entire tests and calibration procedure in 24 hours for each CSC's module; 1500-2000 measurements per module.

3.9. The X-ray tube time of live should not be less than 300 hours.

3.10. The X-ray tube replacement and the monochromator fit procedure should not take more than 16 hours.

3.11. Auxiliary devices to make possible quick monochromator fit have to be designed and constructed.

3.12. The design of the devices should provide fulfillment of the safety rules existing in Russia (for the Pilot Station) and in the United States for the TS.

3.13. A Xe recycling systems should be provided for both installations.

4 R&D program

4.1 For fast calibration of the modules we plan to increase the counting rate by various techniques:
- by optimization of the Pr layer thickness,
- by improving the focusing in the X-ray tube (linear focus),
- by optimization the monochromator (besides several silicon planes, superclean germanium crystal is worth considering).

Besides we can operate several X-ray tubes simultaneously,and use more Xe (50%) in the gas mixture.So we hope to increase the counting rate by a factor 5-10.

4.2. The X-ray beam center-of-gravity position stability should be investigated with accuracy better than $\pm 3\mu$m.

4.3. To fulfill tasks of paragraphes 3.10, 4.1, and 4.2 the following devices should be rented,or constructed:
- a high resolution X-ray Ge-detector for the monochromator adjustment (might be produced by PNPI,if superclean Ge material would be purchased in the USA).
- a double flat crystal diffraction spectrometer,existing at PNPI, for crystal structure perfectness check.
- an installation for the X-ray stability test (now in progress) consisting of a precision sine screw mechanism (about 1μrad angle accuracy [3]) and an adjustable entrance slit with NaI-detector.
- the Michelson type interferometer to produce absolute calibration of the PNPI CMM (has to be rented).

5 Test area requirements

The CMM with the X-ray tube should be installed in separate room with dimensions depending on the width and the length of the installation.In the length direction the measurement envelope should be added.A service area for the CSC's transportation and montage on the CMM table should be provided. The door lock should be suplied with simple safety system that put off the X-ray tube.The room should be suplied with an air conditioning that should stabilize the temperature within $\pm 0.2°$C for the Pilot Station and within $\pm$??°C for the Test Station.

The control room should be treated as an access restricted area.

6 Electronics

Electronics should provide:
- HV supply for the CSC's,
- the CSC's read out,
- the CMM positioning,
- the CMM coordinate read out,
- the X-ray tube power control,
- the temperature control,
- recording above listed parameters.

7 Responsibilities

7.1.The PNPI is mainly responsible:
- for the PS design and construction,
- for the X-ray tubes with the monochromators for the TS,
- for a part of the R&D program,connected with the X-ray tubes and the monochromators tests and optimization.The PNPI will participate in design and construction of the Test Station.

7.2. The LLNL is mainly responsible:
- for the TS design and construction,
- for a part of the *R&D* program.

7.3. The SSCL is mainly responsible:
- for coordination,
- for infrastructure at SSCL,
- for a part of the R&D program.

7.4. All three Laboratories will work in close contact to help each other to overcome problems.

8 Cost estimation

This proposal is not destined for exact cost evaluation and expenditure shares between the Laboratories.Nevertheless we put below the estimation with 30% accuracy.

8.1. The expenditure estimations is shown in the Table .

8.2. The labor is estimated to be about 6 man years for PNPI, and 2 man years for LLNL.

A financial support for PNPI of 25 K$ is desirable including especially purchase of materials and components not available in Russia,a similar amount would be required for assembly of components in the Test Station at SSCL.

References

[1] L.P.Lapina et.al., GEM-TN-92-136.

[2] O.L.Fedin et.al., GEM-TN-351.

Table 1: The expenditure estimations.

Item	Cost	Amount	Sum
CMM for Test Station	$ 200 K	1	$ 200 K
X-ray tube with monochromator	$ 25 K	3	$ 75 K
CMM for Pilot Station	$ 5 K	1	$ 5 K
Electronics for Test Station	$ 100 K	1	$ 100 K
Electronics for PS (CSC's read out not included)	$ 14 K	1	$ 14 K
Computer for TS	$ 3 K	1	$ 3 K
Computer for PS	$ 3 K	1	$ 3 K
Spare X-ray tube	$ 4 K	5	$ 20 K
Materials and components (praseodymium,dislocationless silicon and germanium, etc.)			$ 35 K
SSCL infrastructure			$ 100 K
SUM			$ 555 K

[3] A.I.Smirnov et.al.NIM 60 (1968) 103.

Figures

Fig.1 Schematic view of the X-ray tube with monochromator.

Fig.2 Attenuation coefficients for fiber glass.
Mark "Cu 17 mkm,Br" means "fiber glass coated with 17 microns copper layer,doped bromine as nonflammable protector".

Fig.3 X-ray beam profile measured with CSC,
25% Xe + 23% Ar +15% CF_4 +37% CO_2 gas mixture,
2900 events,FWHM=210 μm,peak position error $\pm 2.2\mu$m.

Fig.4 Schematic view of the test station

Fig.5 X-ray beam positions during calibration along the cathode strips.

Fig.6 Difference between neighbouring anode wire strips counts;
solid line - transition region width 100 μm, broken line - zero transition region width.
The X-ray beam width equals 70 μm in both cases.

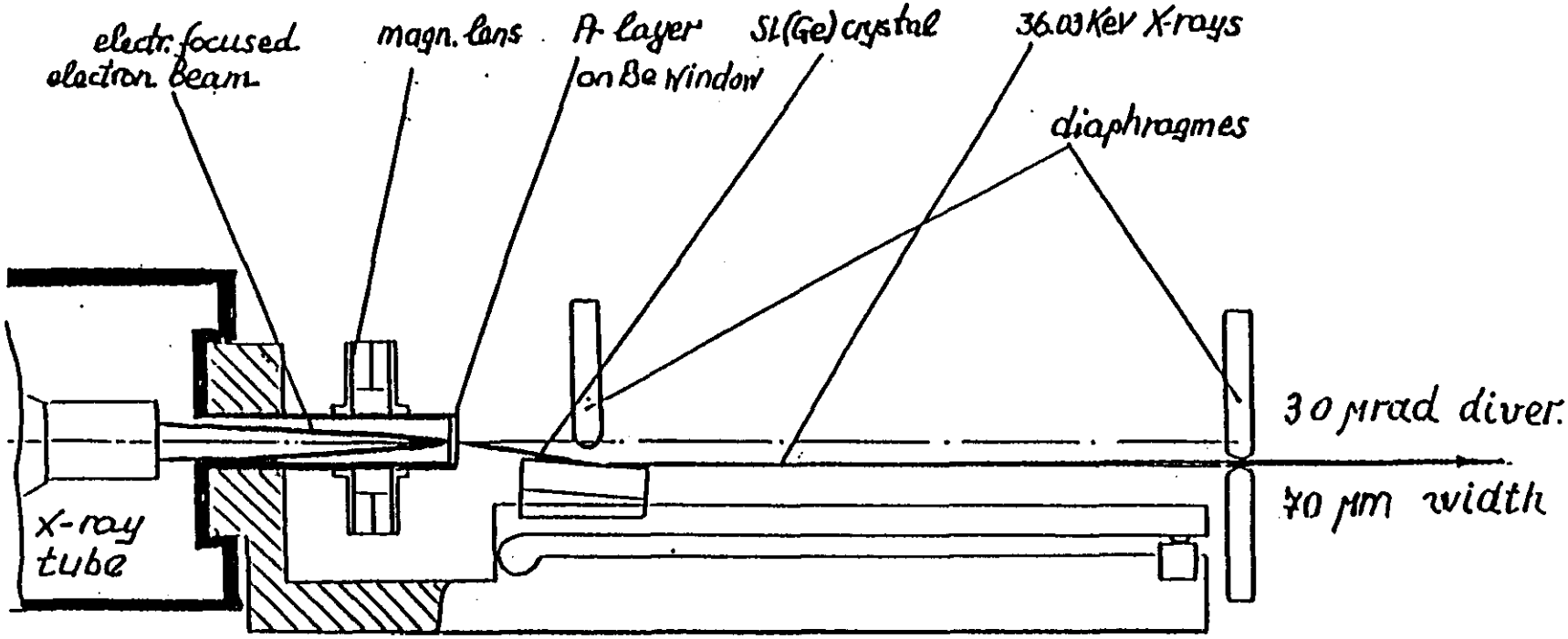

Fig.1 Schematic view of the X-ray tube with monochromator.

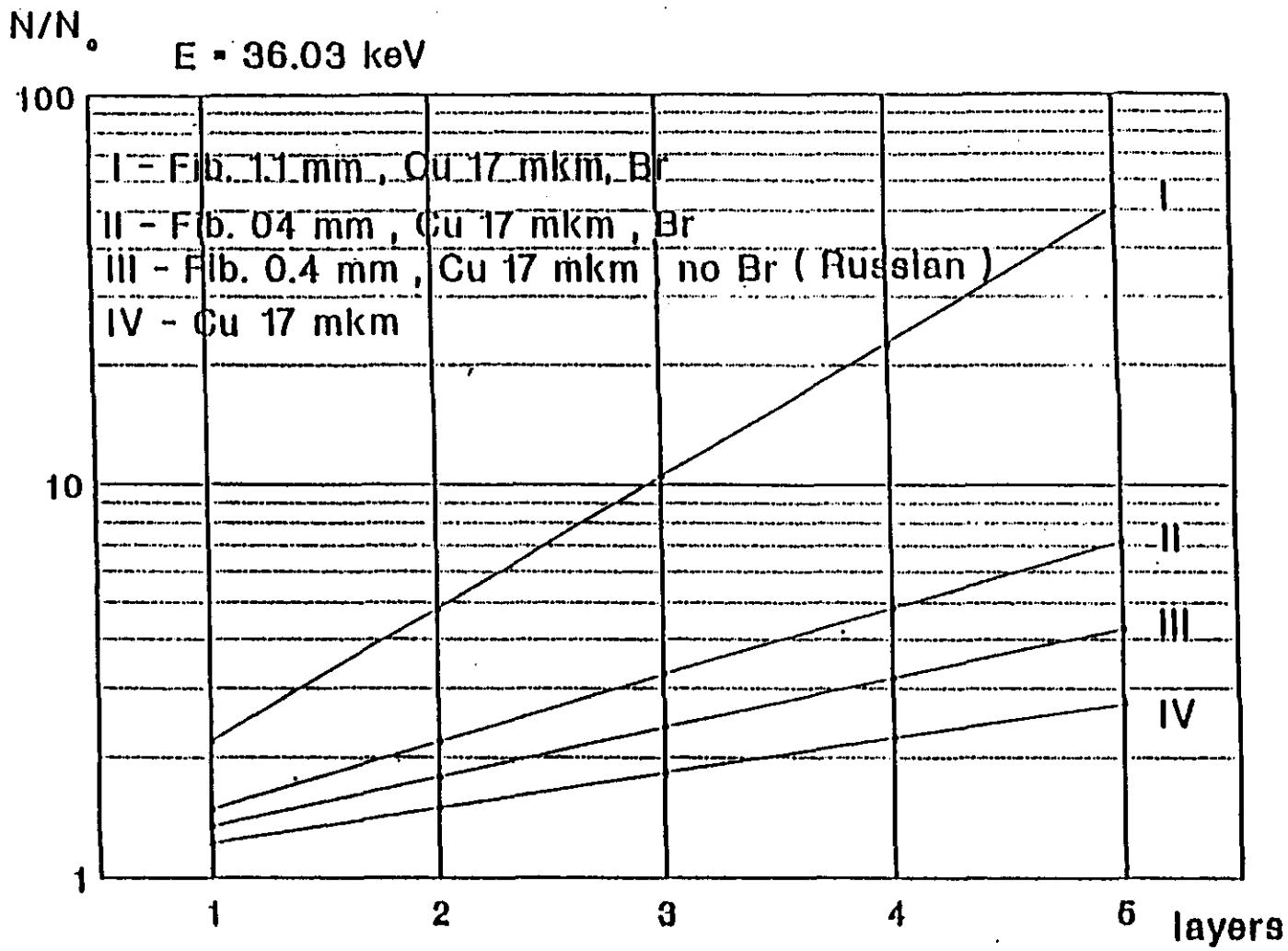

Fig.2 Attenuation coefficients for fiber glass.
Mark "Cu 17 mkm,Br" means "fiber glass coated with 17 microns copper layer,doped bromine as nonflammable protector".

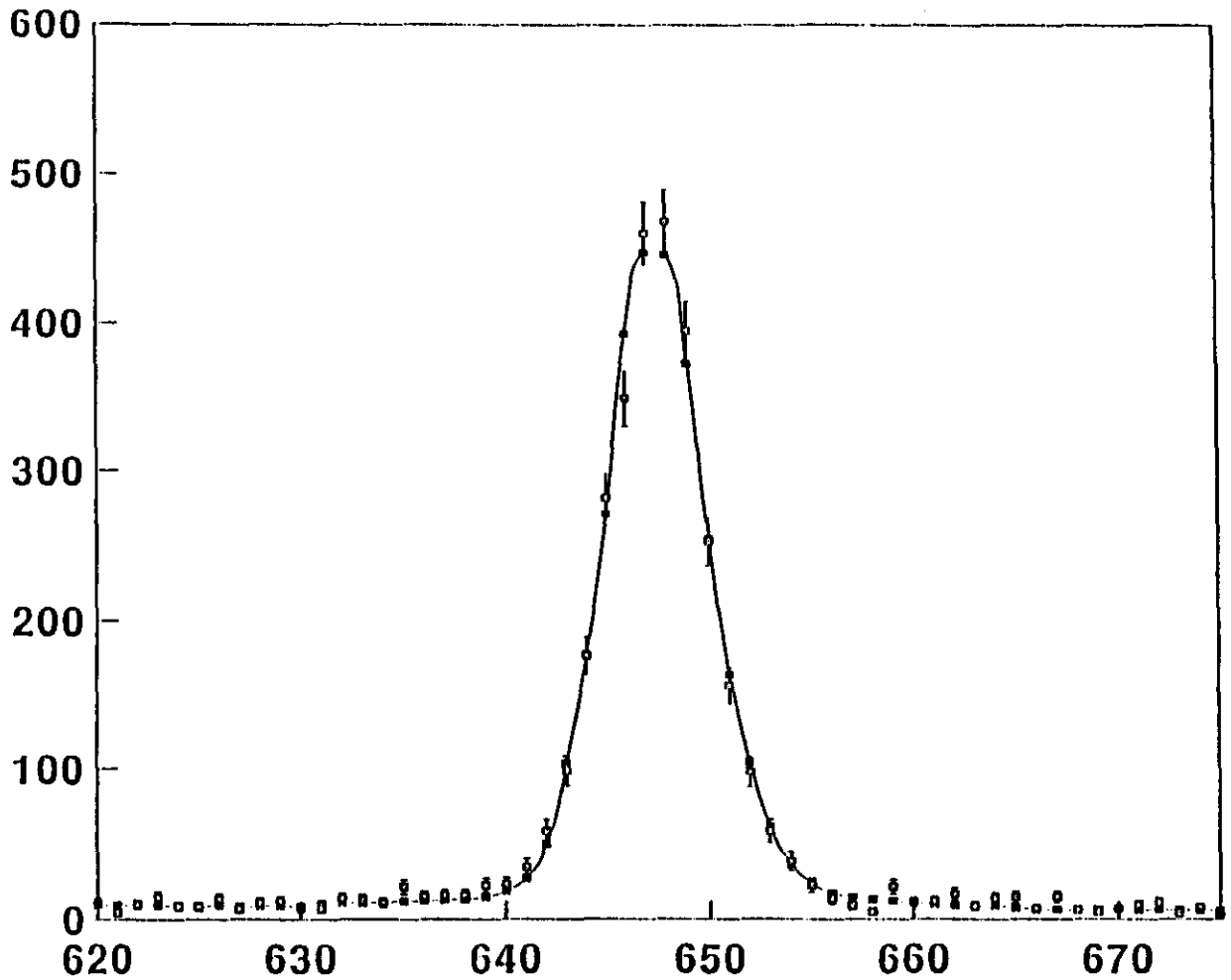

Fig.3 X-ray beam profile measured with CSC.
25% Xe + 23% Ar +15% CF_4 +37% CO_2 gas mixture,
2000 events,FWHM=210 μm,peak position error $\pm 2.2 \mu m$.

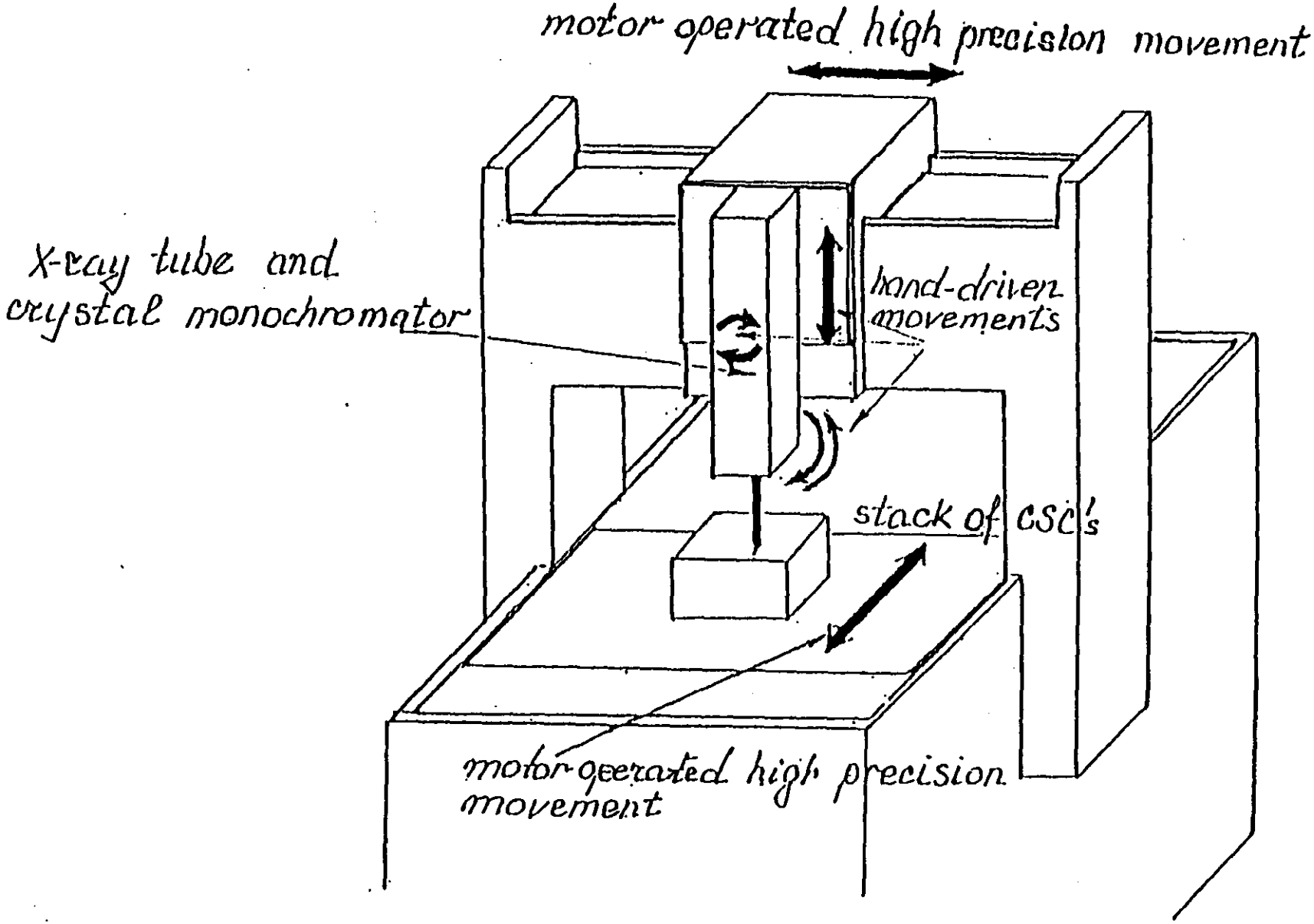

Fig.4 Schematic view of the test station

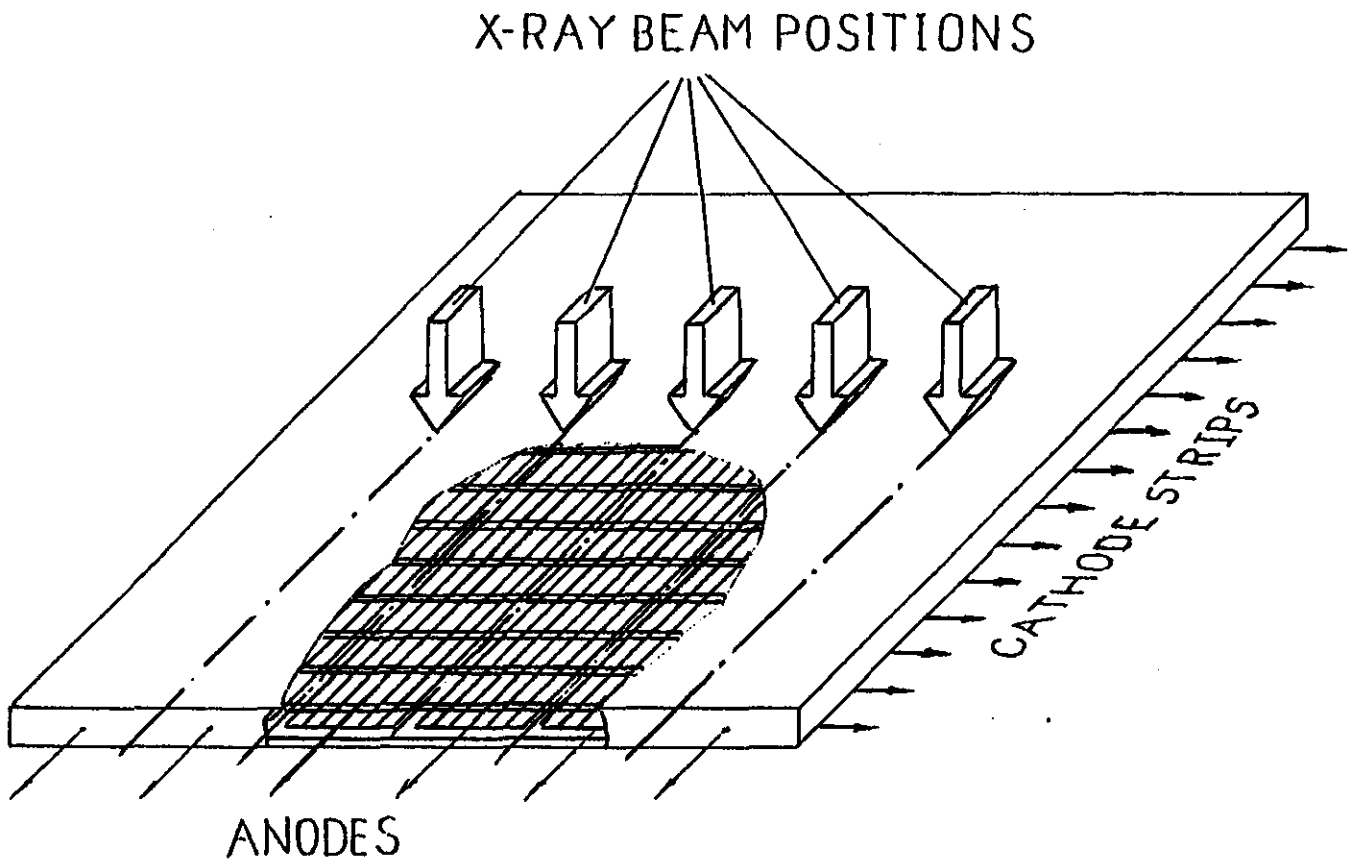

Fig.5 X-ray beam positions during calibration along the cathode strips.

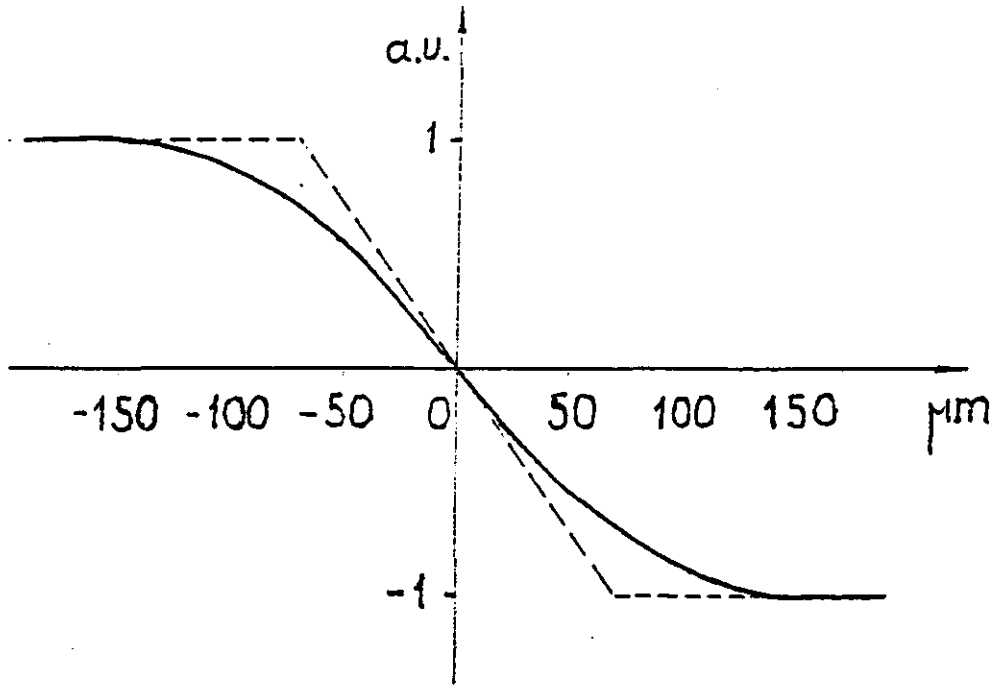

Fig.6 Difference between neighbouring anode wire strips counts; solid line- transition region width 100 μm, broken line-zero transition region width. The X-ray beam width equals 70 μm in both cases.