GEM TN-93-366

Mass Production of the CSC's for GEM Muon System: Technical Proposal

A. Vorobyov, V. Astashin, A. Krivshich, S. Patrichev, O. Prokof'ev,
V. Razmislovich, A. Schetkovski, A. Smirnov, V. Suvorov
Petersburg Nuclear Physics Institute

March 19, 1993

Abstract:

A technical proposal on mass production of the CSC's for GEM Endcap Muon System is presented. Tests with proton beams, neutron sensitivity measurements, X-ray test stations for local alignment, and prototype for global X-ray beam alignment are also discussed.

Mass Production of the CSC's for GEM Muon System

Technical proposal

A.Vorobyov, V.Astashin, A.Krivshich, S.Patrichev, O.Prokof'ev,
V.Razmislovich, A.Schetkovski, A.Smirnov, V.Suvorov
Petersburg Nuclear Physics Institute

March 2, 1993
Revised March 19,1993

Abstract

A technical proposal on mass production of the CSC's for GEM Endcap Muon System is presented.Tests with proton beams,neutron sensitivity measurements, X-ray test stations for local alignment,and prototype for global X-ray beam alignment are also discussed.

1 GENERAL

This technical proposal for mass production of the CSC's for GEM Muon System is based on the PNPI experience in production of various types of multiwire proportional chambers (more than 500 MWPC's have been produced) and also on the experience in production of the first prototypes of the CSC's for GEM in 1992 (Fig.1).

1.1. The CSC's factory is designed for production of all chambers for Endcaps of GEM Muon System.

1.2. Totally, 480 Modules should be produced according to the specification of February 9, 1993. Each Module contains 6 or 8 layers. Altogether there 12 modifications of the modules, in accordance with the size of the chambers: (dR,S1,S2).

1.3. The production of all the Modules is scheduled for 1994-1997.

1.4. The organization of the mass production should be completed by mid of 1994.

1.5. Preproduction prototypes of CSC's should be produced during 1993.

1.6. The goals of the factory will be not only assembling of the CSC Modules, but also installation of the front end electronics and complete tests and calibration of the Modules, including X-ray tests,test in the proton beam,and tests in neutron beam.

2 CHARACTERISTICS OF THE PRODUCTION AND TEST AREAS

In addition to the existing MWPC facility ($500m^2$), new areas are prepared ($1500m^2$) that will be dedicated to production and tests of the CSC's for GEM.There are three blocks of areas: the production area,the X-ray test area, and the Test Hall.

2.1. The production area occupies a 2-stories building of 1100 m^2 as shown in Fig.2 and 3. It contains:

-technological areas,
-clean rooms,
-control rooms,
-services and storages.

2.2. Each produced Module will be tested and calibrated with the 36 keV X-ray beam. For this purposes we have a special area of 210 m^2 (Fig.4). This area includes also the rooms for packing and storage of the Modules ready for transportation.

2.3. Figs. 5 and 6 show the Test Hall of 210 m^2, 7.4 m high that is planned to be used for global alignment tests of two Endcap sectors (1/12) with the 36 keV X-ray beam.This Hall is well shielded that could allow to use high power X-ray tubes.The Hall is equipped with a crane. It is well isolated from vibrations for high precision alignment tests.

2.4. All the areas are provided with power and water, canalization and ventilation systems.The clean rooms are equipped with air conditioning that should stabilize the temperature within $\pm 1°C$.

2.5. Some of the Modules will be tested in the 1.7 Gev/c proton beam. The proton beam test facility is shown in Fig. 7.

2.6. Some of the Modules will be also tested in the pulsed neutron beam (E = 0.1 eV - 20 MeV).The neutron test facility is shown in Fig. 8.

3 CSC's DESIGN REQUIREMENTS

Though the final optimization of the CSC's is not yet finished we assume the the following requirements to the CSC's as the inputs for design of the technology for mass production of these chambers.

3.1. The cathode blocks are made of 20 mm thick honeycomb panels covered from both surfaces with 0.5 mm G10 coated from one side with a 17 μm thick layer of Cu. The flatness of the cathode blocks should be within $\pm 50\mu$m. The thickness of the cathode blocks should be within $\pm 100\mu$m.

3.2. Each CSC has one stripped cathode plane.The strips have radial configuration with two floating strips between read out strips. The mean spacing between read out strips is 5 mm.

3.3. The capacitance between two neighbouring strips should be uniform within $\pm 0.5\%$.

3.4. The gap between two cathode planes is 5 mm. It is defined by the spacer frames glued to each surface of the cathode block. The thickness of the spacer frames should be 2.5mm $\pm 20\mu$m.One of the spacer frames serves as the anode frame.

3.5. The diameter of the anode wires is 30 μm.

3.6. The spacing between the anode wires is 2.5 mm.

3.7. 20 anode wires are connected in one read out strip.

3.8. Anode wires are tilted relative to the central cathode strip by the Lorentz angle.

3.9. Six or eight layers of CSC's should be assembled in one Module. As an option, a composite Module 2 x 4 layers instead of the 8 layers module is also considered.

3.10. The construction of the Module should allow dismounting. The sealing is provided with a rubber ring between two spacer frames.

3.11. The large size CSC's may have some additional spacers parallel to the anode wires to increase the rigidity of the Modules.

3.12. The cathode planes are at zero potential. The anode planes are at HV potential. Each anode wire strip should be separated from the preamps by a HV capacitor.

3.13. The nominal gas mixture in the CSC's is 30%Ar+20%CF_4+50%CO_2.

3.14. The CSC's should operate at nominal gas gain M=$5 \cdot 10^4$.

3.15. The space resolution of the CSC's should be $\sigma \leq 75\mu m$ per plane.

3.16. Relative misalignment of the cathode strips in different layers of the Module should be within $\pm 20\mu m$.

3.17. Before the final tests with the 36 keV X-ray beam,each Module should be instrumented with the front-end electronics that would remain as a part of the Module after the tests.

3.18. All the CSC's in each Module should be calibrated with the 36 keV X-ray beam to a precision of $\pm 10\mu m$.

3.19. Some of the Modules should be tested in the 1.7 Gev/c proton beam. In particular,time and space resolution of the CSC's will be measured in these test.

3.20. Some of the Modules should be tested in the Gatchina pulsed neutron beam at 0.1 eV $< E_n <$ 20 MeV. These tests should provide the response of the CSC's to neutrons (efficiency,parameters of signals,correlated efficiency, influence of construction and surrounding materials).

3.21. The results of all tests for each module should be recorded in a separate diskette.

3.22. The tested modules should be packed and prepared for transportation to the SSCL.

3.23. A separate task will be global alignment tests of two Endcap sectors using the 36 keV X-ray beam. For these purposes two full size sectors (1/12) of the Endcap Muon System will be assembled in the Test Hall. The sectors will be equipped with the optical alignment system designed for permanent use in GEM. The goal is to check the precision of the alignment system so that the sagitta measurements could be performed to ± 20 μm precision.

4 PREPRODUCTION PROTOTYPE

A drawing of the CSC inner module (1b) is shown in Fig.9.The spacing between the base openings along the perimeter of the module is 130 $\pm 0.5mm$.This spacing corresponds to the existing technological equipment for the proportional chamber production at PNPI.The utilization of this standard makes it possible to organize fast and less expensive production of the first CSC's at PNPI.

Reference marks are made at the frame in order to connect the internal coordinate system of the module with the external coordinate system of the Endcap.The module cross section is shown in Fig.10.

We propose to use the "build up" method for assembling the module.This method allows to assemble and test each layer one by one and also to repair it if some troubles are discovered during these tests.The module will contain eight layers of CSC's.Special short screws allow to join the layers of the module to each other consequently.The B region from Fig.10 is shown in detail in Fig.11.The shapes and dimensions of the spacers used to fix the anode-cathode gap are shown there. The special rubber seal is used to make each plane hermetic.It is inserted into a slot at the surface of the spacer. Fig.12 shows three types of the cathode blocks with the glued spacers.

The type A cathode block has precise strips on both sides, with two spacers glued.The type C has precise strips and glued spacer only at one side.The type B cathode block has coarse strips, parallel to the anode wires,at both sides, with two glued spacers.The anode wires are soldered symmetrically to both sides of the block B.It provides symmetric loading of the block and prevents its deformation.

5 MASS PRODUCTION

TECHNOLOGICAL CHAIN.

The CSC mass production technological chain includes the processes shown in Fig.13.Below is an estimate of the labor in man hours required for assembling of one "averaged" module defined as module containing 1/480 of the total number of the anode wires and 1/480 of the total number of cathode strips.The size of the "averaged" module is dR × (S1+S2)/2=2.0 × 0.6 m^2.

5.1. Fabrication of components in industry:
- cathode blocks laminated on honeycomb panels,
- spacer bars for chamber frames.

5.2. Purchasing of various materials and components:
- gold plated tungsten wire enforced with rhenium,
- signal and HV connectors,
- glues, O-rings etc.,
- capacitors, resistors, etc.,
- others.

5.3. Fabrication at PNPI.	
5.4. Store of components and materials.Acceptance control.	
5.5. Flatness and thickness control of blocks.	3.0 mh
5.6. Strip conductivity control.	2.0 mh
5.7. Interstrips capacity control.	3.0 mh
5.8. Cleaning of the cathode blocks.	0.75 mh
5.9. Putting of resistive layers on floating strips.	0.75 mh
5.10.Control of resistive layer.	1.5 mh
5.11.Flatness and thickness control of spacer bars	3.0 mh
5.12.Gluening of spacers on cathode blocks (types A, C,and B).	6.0 mh
5.13.Gluening quality control.	1.0 mh
5.14.Ultra-sound cleaning of anode wires.	2.0 mh
5.15.Winding of anode wires on transfer frames	4.5 mh
5.16.Preparing of the anode wires for fixation on the anode frame.	5.0 mh
5.17.Wire tension control.	1.5 mh
5.18.Fixation of wire spacings.	0.5 mh
5.19.Soldering of wires.	2.0 mh
5.20.Cleaning.	2.25 mh
5.21.Capacity control.	3.0 mh
5.22.Installation of external elements.	3.0 mh
5.23.Cleaning.	0.75 mh
5.24.Assembling of one layer.	2.0 mh
5.25.Installation of external elements.	1.0 mh
5.26.High voltage training, N_2.	1.5 mh
5.27.High voltage test, N_2.	3.0 mh
5.28.High voltage test, real gas.	4.0 mh
5.29.Leakage control.	2.0 mh

The operations 5.24-5.29 are repeated for each layer.

5.30.Module assembling control. 2.0 mh
5.31.Installation of high voltage and signal connectors. 6.0 mh
5.32.High voltage test with real gas. 5.0 mh
5.33.Installation of front-end electronics. 5.0 mh
5.34.Calibration of read out electronics.
5.35.X-ray tests.
5.36.Proton beam tests.
5.37.Packing of the modules.
5.38.Storage.
5.39.Shipping to SSCL.
5.40.X-ray tests at SSCL.
5.41.Assembling of the Endcaps of the Muon System.
5.42.Global X-ray alignment of the Endcaps.

Total labor for assembling of one module is 480 man hours (including 80 man hours reserved for repare of defects). The labor for 1 layer is 74 man hours. Note, that this estimate does not include read out electronics calibration. X-ray tests, global alignment tests and the labor for fabrication at PNPI of the mechanical parts (screws etc.) The cost of the equipment and tools needed for organization of mass production is estimated as 200 K$.

6 CALIBRATION OF CSC's WITH 36 KeV X-RAYS

6.1. One of the advantages of the CSC's is the possibility to perform complete tests and high precision calibration of these chambers with an X-ray beam. Following the proposal formulated in GEM report [1],a special X-ray tube has been constructed at PNPI with the anticathode made of Pr and with monochromator selecting the $K_{\alpha 1}$-line of 36.03 keV energy (Fig.14).The beam parameters at the exit slit of the monochromator are as follows [2]:
- beam size $5 \times 0.07 mm^2$,
- beam divergency 30 μm,
- beam intensity $10^3 1/sec$.

The last value corresponds to the X-ray tube power of 3 watts.Due to relatively high energy, the beam can penetrate through a Module of CSC's with reasonable attenuation (Fig.15).Therefore, all layers of the Module can be tested simultaneously.During the tests, some amount of Xe (25%) will be added to the gas mixture filling the CSC's. The K-edge of Xe is 34.56 keV, so the absorption of the 36 keV quanta by Xe atoms leads to production of short ranged photoelectrons with energy of 1.47 keV. In addition, some Auger electrons will be produced, so the total energy will be about 6 keV. The ionization produced by these low energy electrons will be concentrated in close vicinity to the X-ray beam. Therefore the beam profile measured with the CSC's should be narrow,and the center-of-gravity of this profile can be determined with high precision. Recently, these ideas have been checked experimentally at PNPI. The X-beam described above was directed on a prototype of CSC's. Fig.16 shows the beam profile measured with the CSC when the gas mixture contained 25% of Xe.The width of the measured profile proved to be FWHM=210 μm.The peak to background ratio was 60/1.The counting rate was $\sim 10 sec^{-1}$. With 2900 signals, the peak position was determined with $\pm 2.2 \mu$m precision.

6.2. A high precision Coordinate Measuring Machine will be used in the calibrations of the CSC's.The module equipped with the read out electronics and calibrated with pulse generator signals will be scanned by the X-ray beam across the cathode strips.The beam position X_{beam} will be controlled by the CMM with 5 μm precision. The CMM coordinate system will be

related with the CSC reference points by observing the 10% increase of the counting rate when the beam is crossing the gap between the cathode strips in the vicinity of the reference points. In each scanning point (for example,each 1mm step) the peak position of the X-ray beam, X_{meas} will be measured with an accuracy of $\sigma \leq 10\mu m$, and the difference $X_{beam} - X_{meas}$ will be the calibration curve that takes into account all imperfections of the module (nonlinearity, misalignments, nonuniform capacity between strips, fluctuations in the values of the capacities at the input of the preamps used for calibration of the read out system with pulsed generator signals, etc.). All the layers in the module will be tested simultaneously,thus the relative alignment of the layers will be strictly controlled. As the result of this calibration procedure,the module as whole should provide the best possible space resolution with minimum systematic errors in determining the track coordinate.

6.3.For fast calibration of the modules we plan to increase the counting rate by various techniques: better focusing in the X-ray tube (linear focus), by optimization the monochromator, more Xe (50%) in the gas mixture,and operating several X-ray tubes simultaneously. With an order of magnitude increase in counting rate we expect to perform the entire procedure in several hours for each module.

7 GLOBAL ALIGNMENT WITH 36 keV X-RAY BEAMS.

The accuracy of the reconstructed muon momentum is determinated partly by the alignment accuracy within one super- layer,between superlayers in one sector, and between different sectors.The X-ray beam test technique described in chapter 6 and in more details in [1,2] can be applied to the alignment between superlayers and between sectors,as it was discussed in GEM note [3].

7.1 We propose to design and construct a special installation containing the high power linear focus X-ray tube with praseodymium anticathode and the double flat crystal monochromator assembled on a mechanical supporting frame providing possibility to direct X-ray beam to chosen direction with very high accuracy.The supporting frame should afford two degrees of freedom(Θ,Φ) for beam displacement and be remotely operated. The highest accuracy of the beam direction determination have to be evaluated as 2.5 μrad for the Φ angle.This requirement can be guaranteed by an angular displacement measurement system consisting of an optical system which will divided the all Φ-space into some sectors according to the GEM muon detector structure with accuracy better than 2.5 μrad and the angle interferometer for continuous measurements inside every sector with accuracy better than 1 μrad.

7.2 The beam width can be made of about 100-150 μm.The beam divergence expected has to be 20-25 μrad.The maximum beam width is expected to be less than 300 μm on the outside Endcap superlayer.The detection efficiency of 36 keV quanta was measured to be about 1% in one CSC for 25% Xe gas mixture. For the low power X-ray tube we have about 300-500 counts per sec, per watt after monochromator.One kilowatt power X-ray tube with linear focus is in progress now.It means that the X-ray beam with the intensity $3\dot{1}0_5$ quanta/sec will be obtainable.Using measured attenuation factors shown in Fig.15 and the results of the first test run [2] one can estimate the count rate in the last chamber of the third superlayer to be 0.4 count/sec for chamber wall made of 0.5 mm G10 doped Br as nonflammable protector and about 3 count/sec for G10 without Br.In the first case the center of gravity of the beam intensity distribution can be measured with accuracy of 20 mum in 3 min. 7.3 The produced beam will simulate the infinite momentum muon track collection(Fig.17).This "quasi tracks" having the zero sagitta are the bundle of the straight lines from the quasi interaction point.They will give the possibilities to measure the false sagitta,to compare them with values of the quadratic interpolating function

[4,5], calculated from"monitor reading"of the optical alignment system and to determine the correction matrix for chosen alignment procedure.So the full scale test of the alignment system and procedure can be done.

7.4 The test procedure can be done by the most elegant way, if optical sensitive elements will be sensitive to the X-ray beam as well.The charge coupled devices look promising for this task.

7.5 At the first stage we plan to install the two sectors model of the Endcap muon system suplied with the alignment optical elements to check performance of the X-ray beam test device along with a model of the global alignment system.

References

[1] L. P. Lapina et.al.,GEM-TN-92-136.

[2] O. L. Fedin et.al.,GEM-TN-93-351.

[3] A. Ostapchuk, V.Schegelsky, GEM-TN-92-228.

[4] G. Mitselmakher, A.Ostapchuk,GEM-TN-92-202.

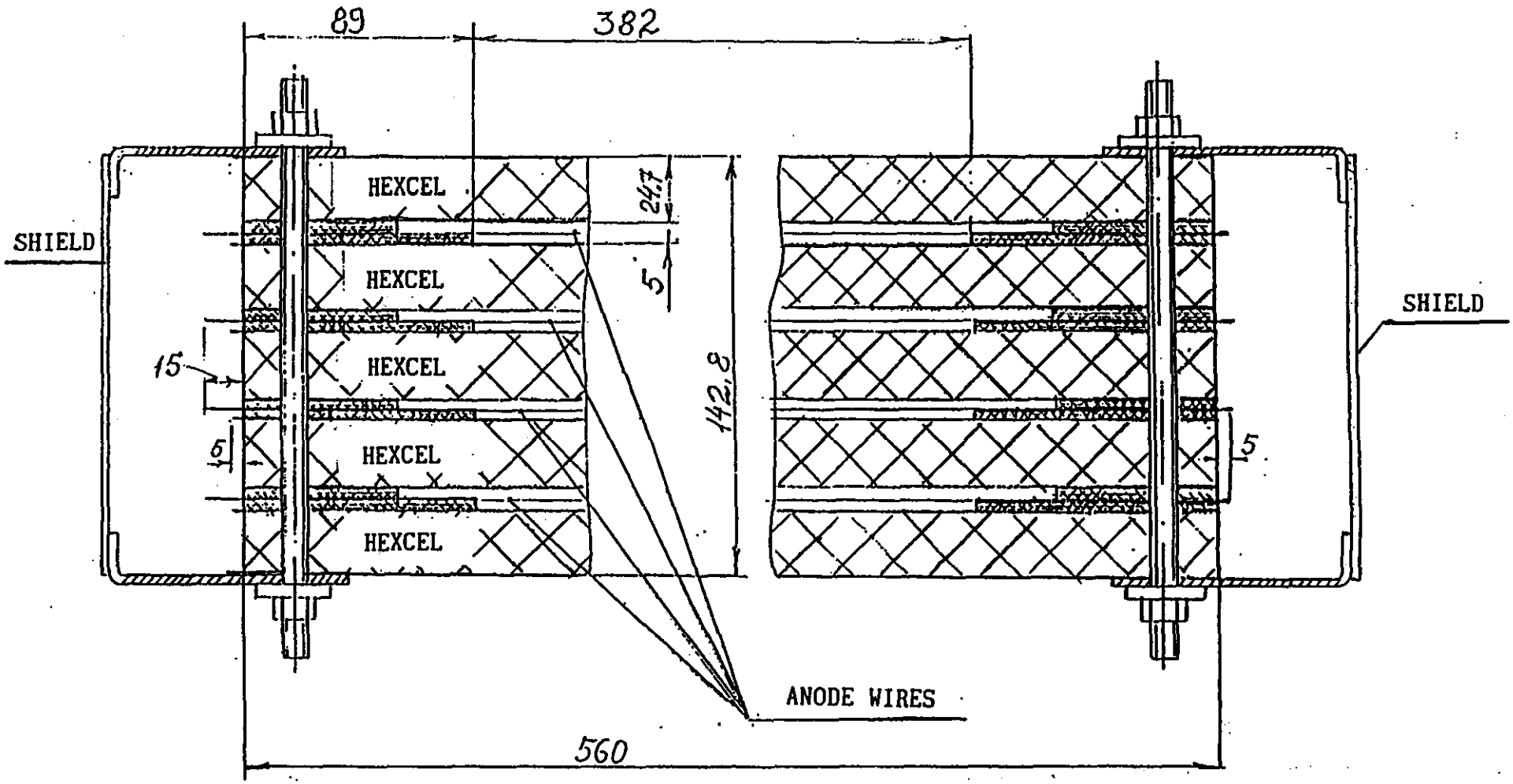

Fig 1. PNPI prototype of CSCs

PRODUCTION AREA

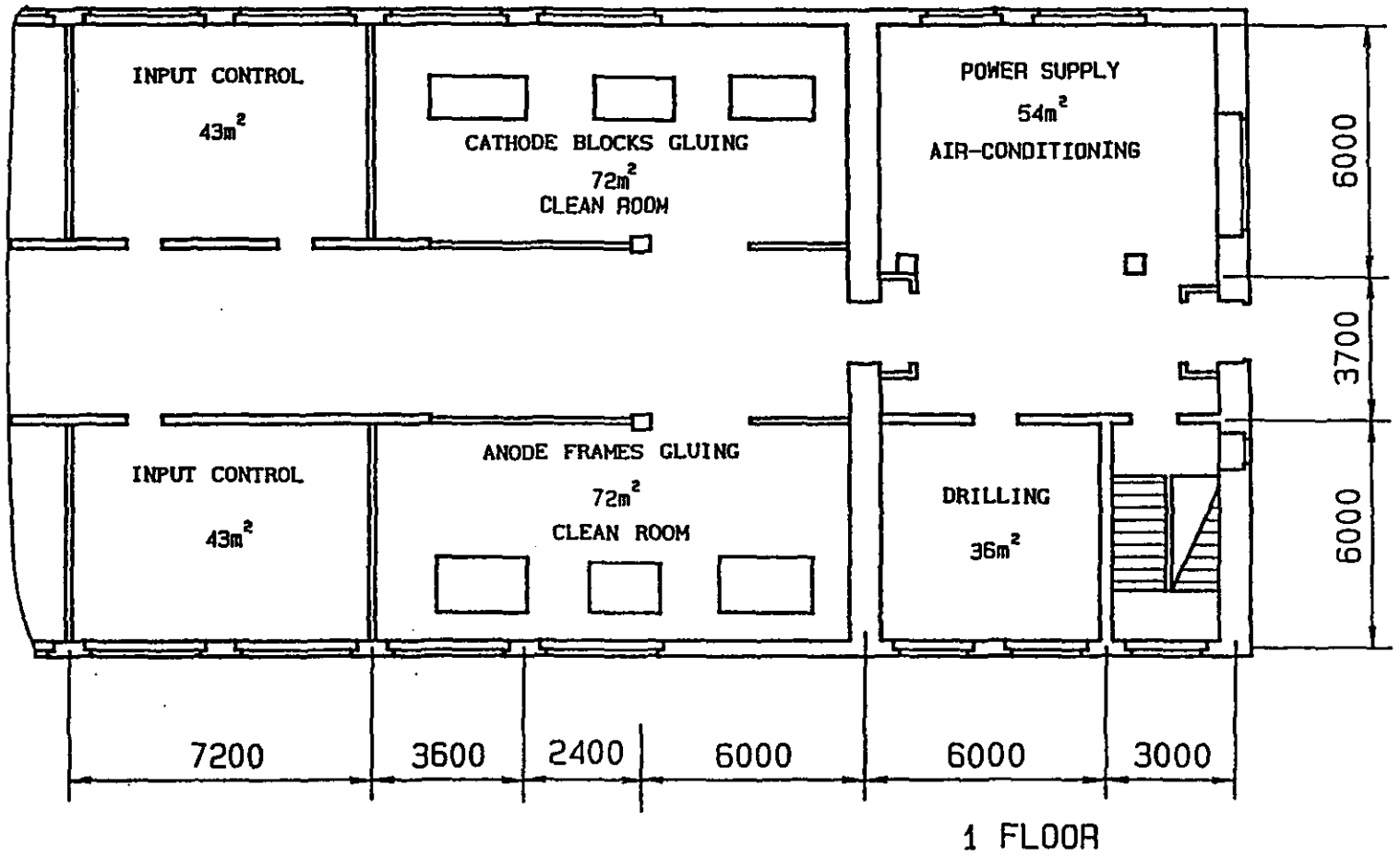

Fig.2.

P R O D U C T I O N A R E A

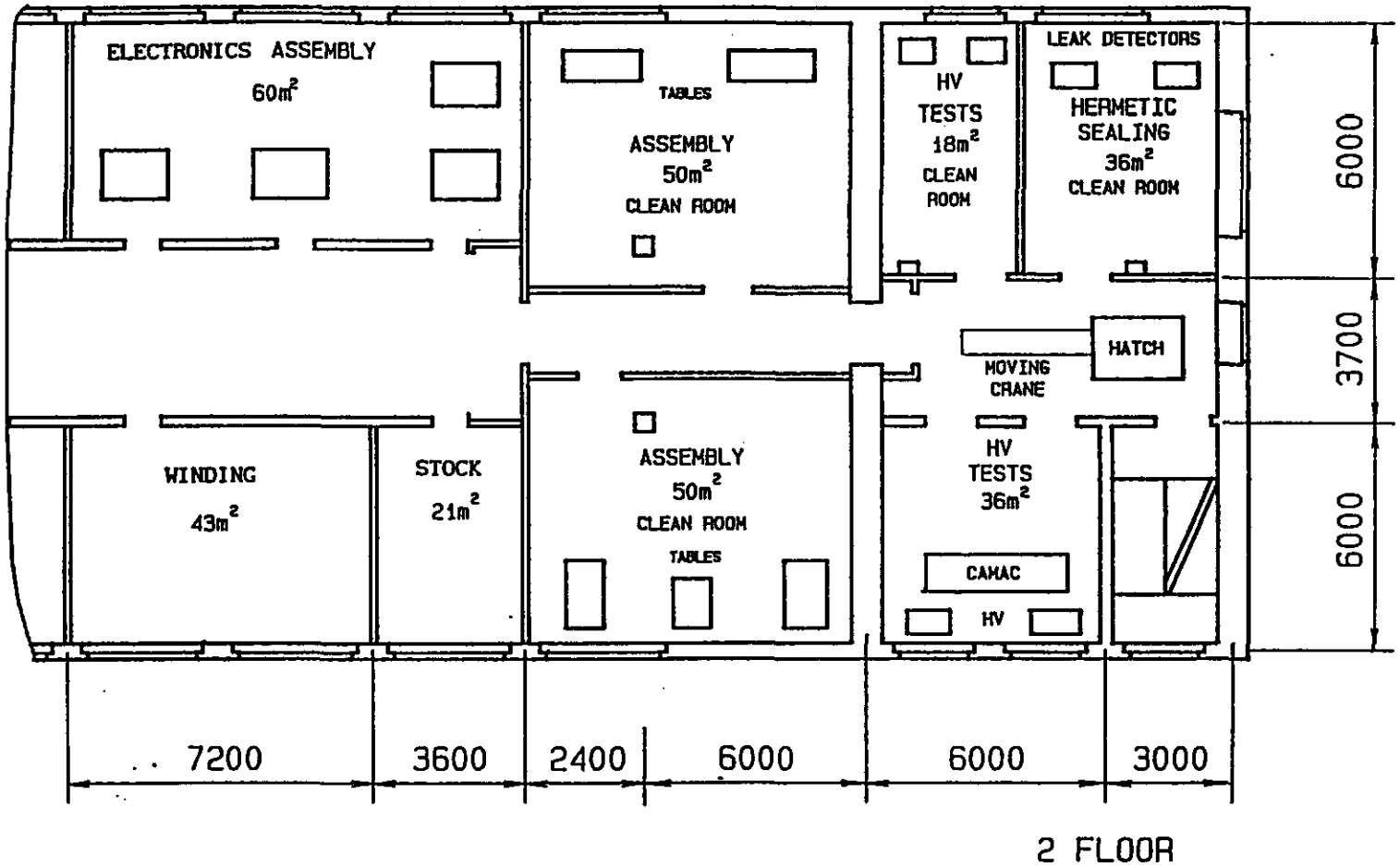

2 FLOOR

Fig.3.

CSC MODULES

X-RAY TESTS & STORAGE

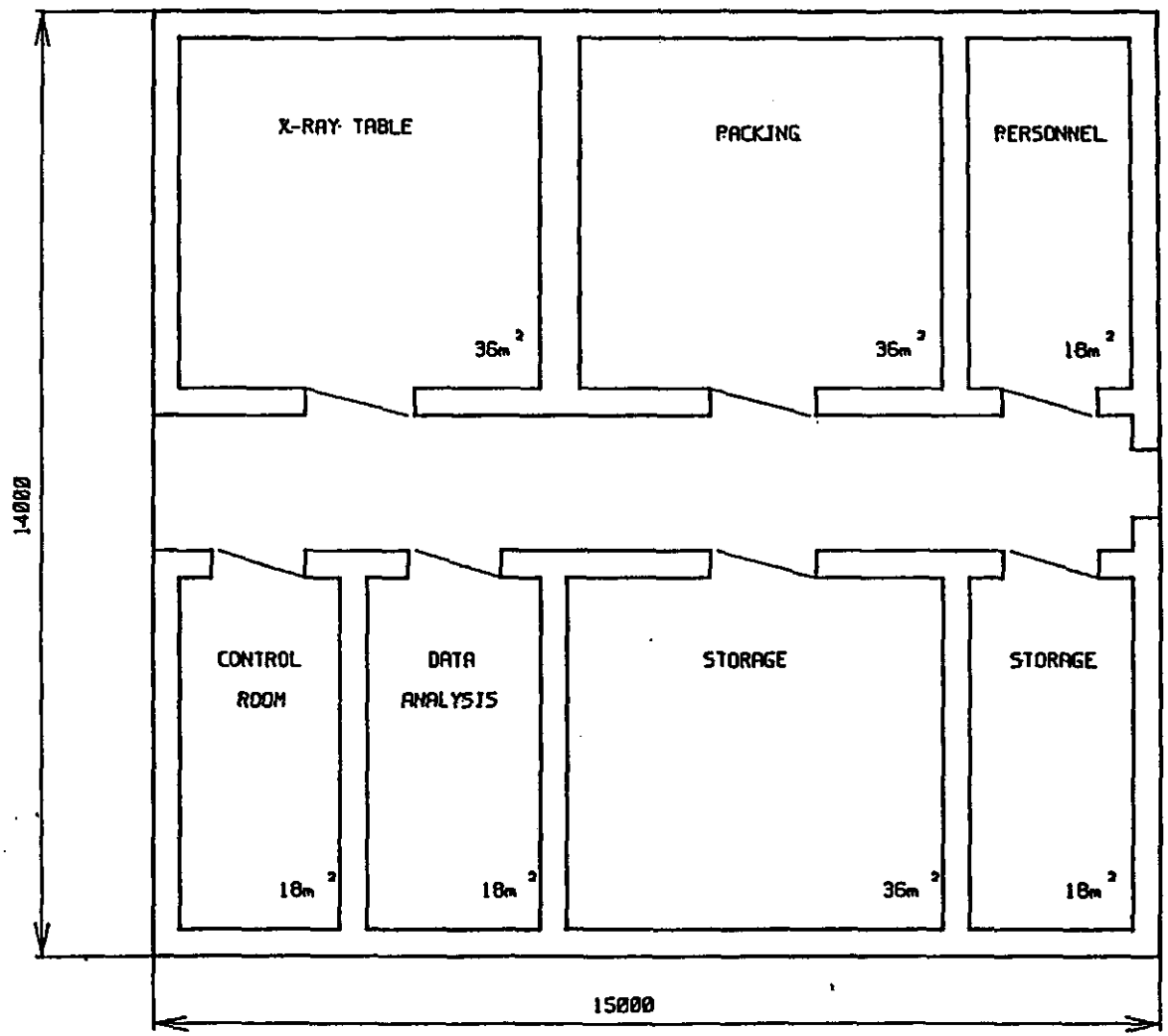

Fig.4.

TEST HALL
GLOBAL X-RAY ALIGNMENT

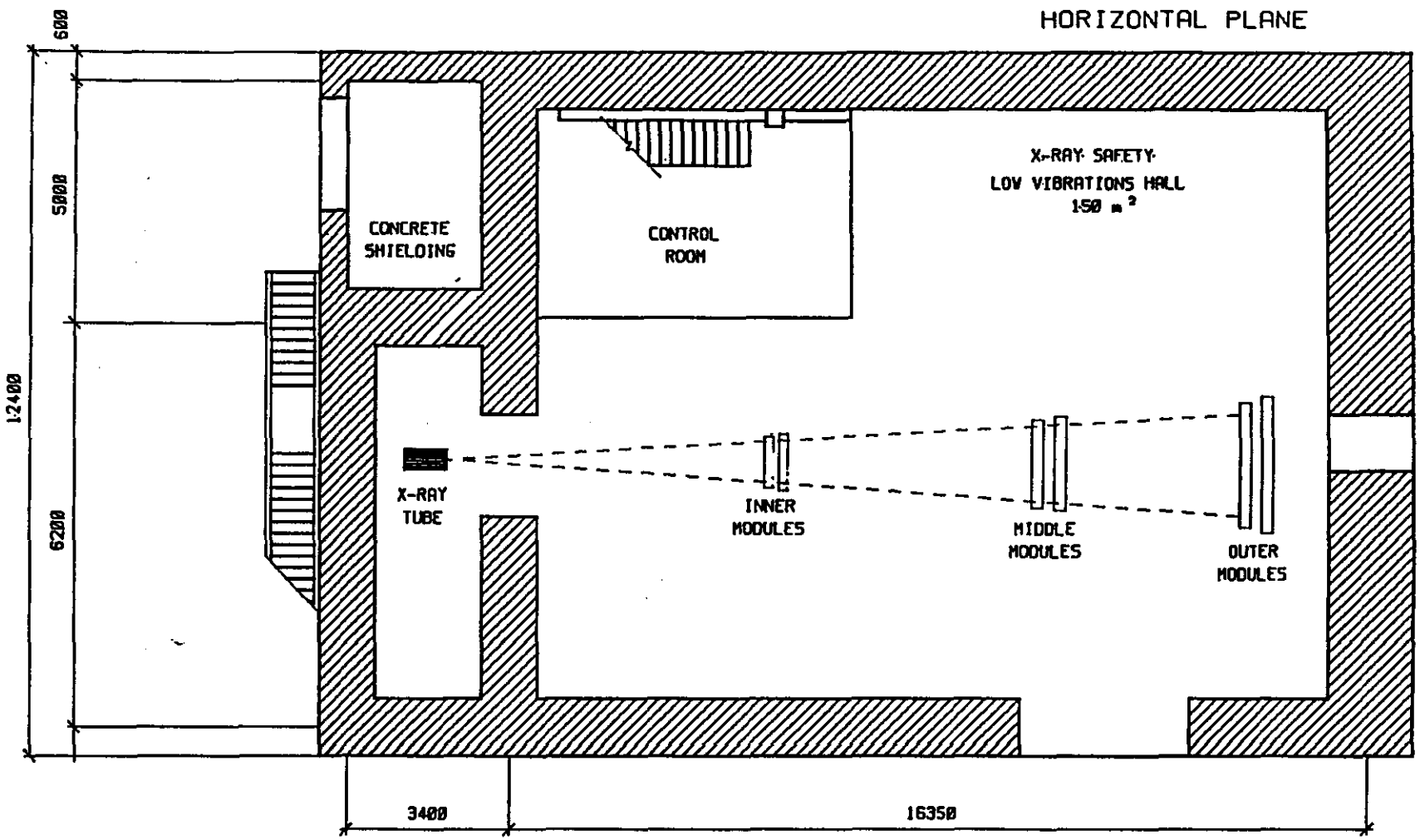

Fig.5.

TEST HALL

GLOBAL X-RAY ALIGNMENT

VERTICAL PLANE

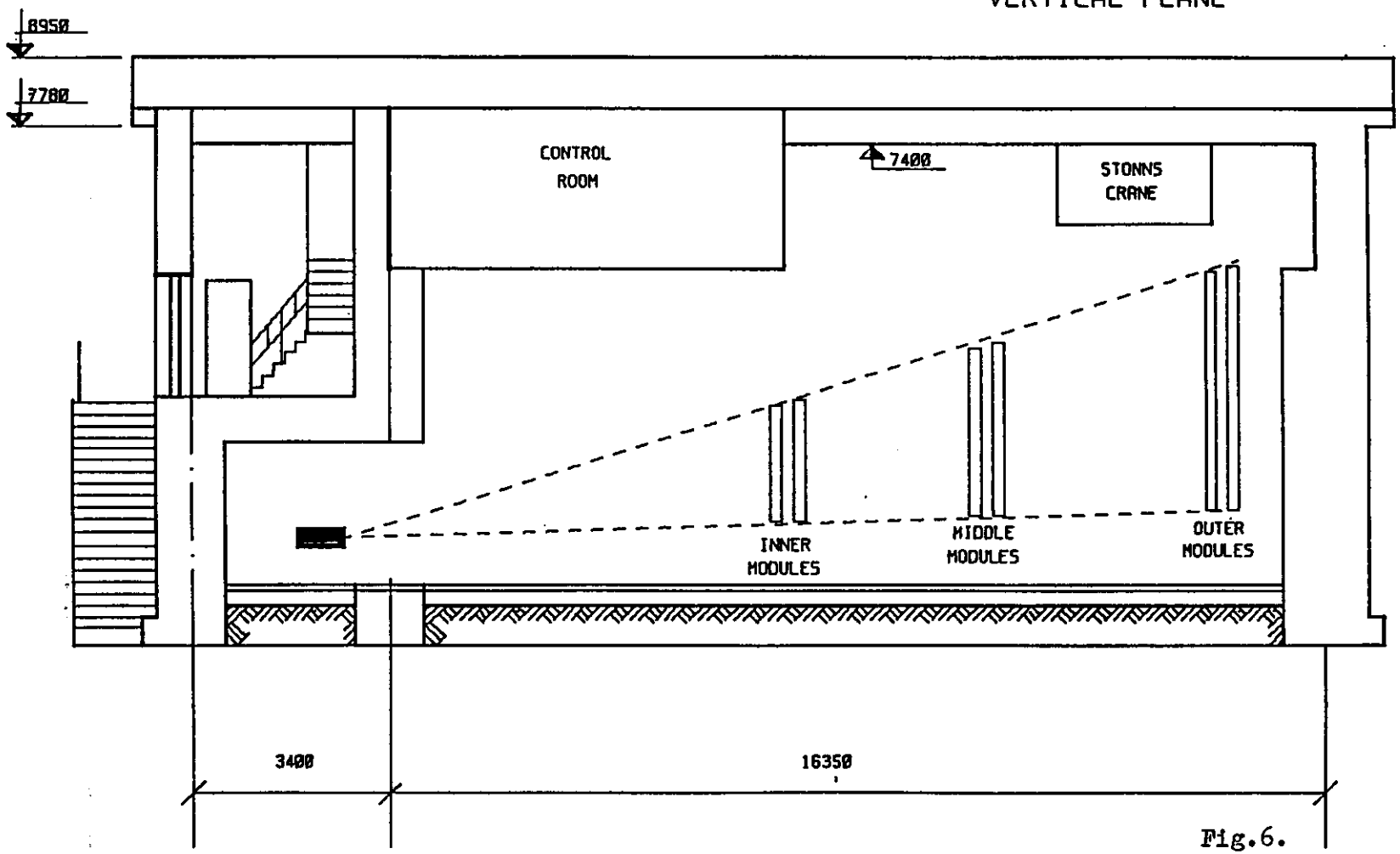

Fig.6.

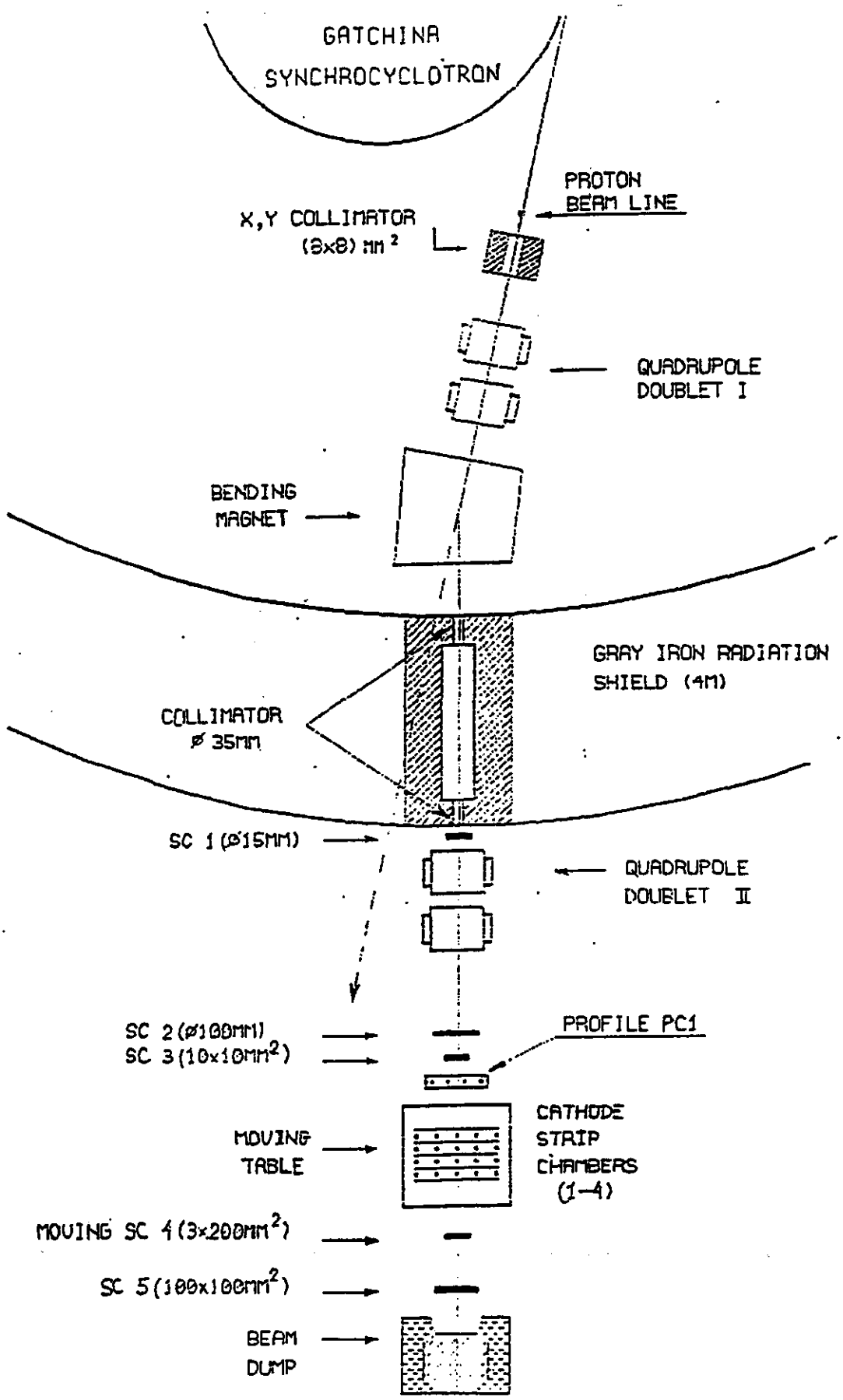

Fig 7. Proton test beam at Gatchina synchrocyclotron

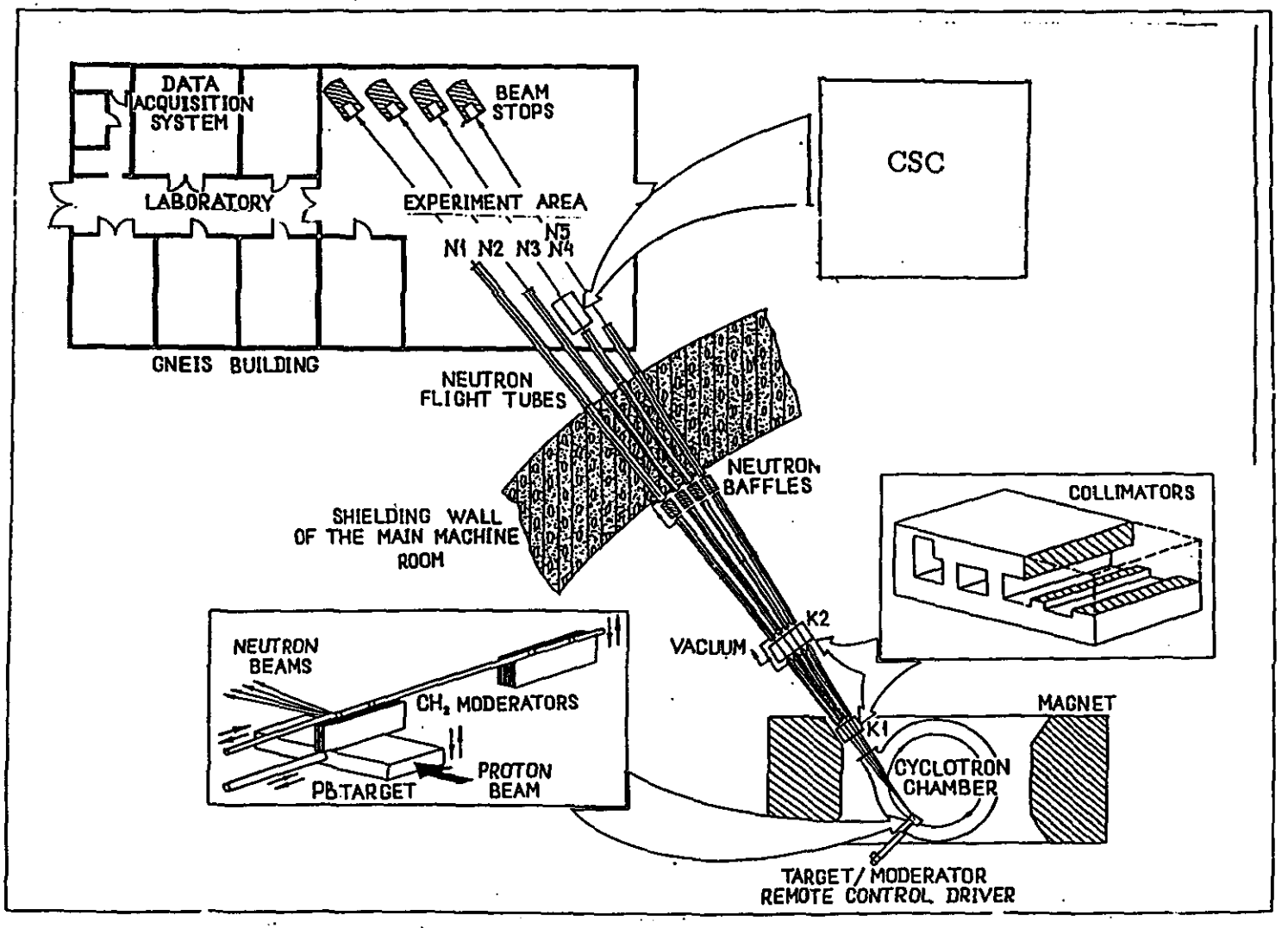

Fig. 8 General layout of the GNEIS facility.

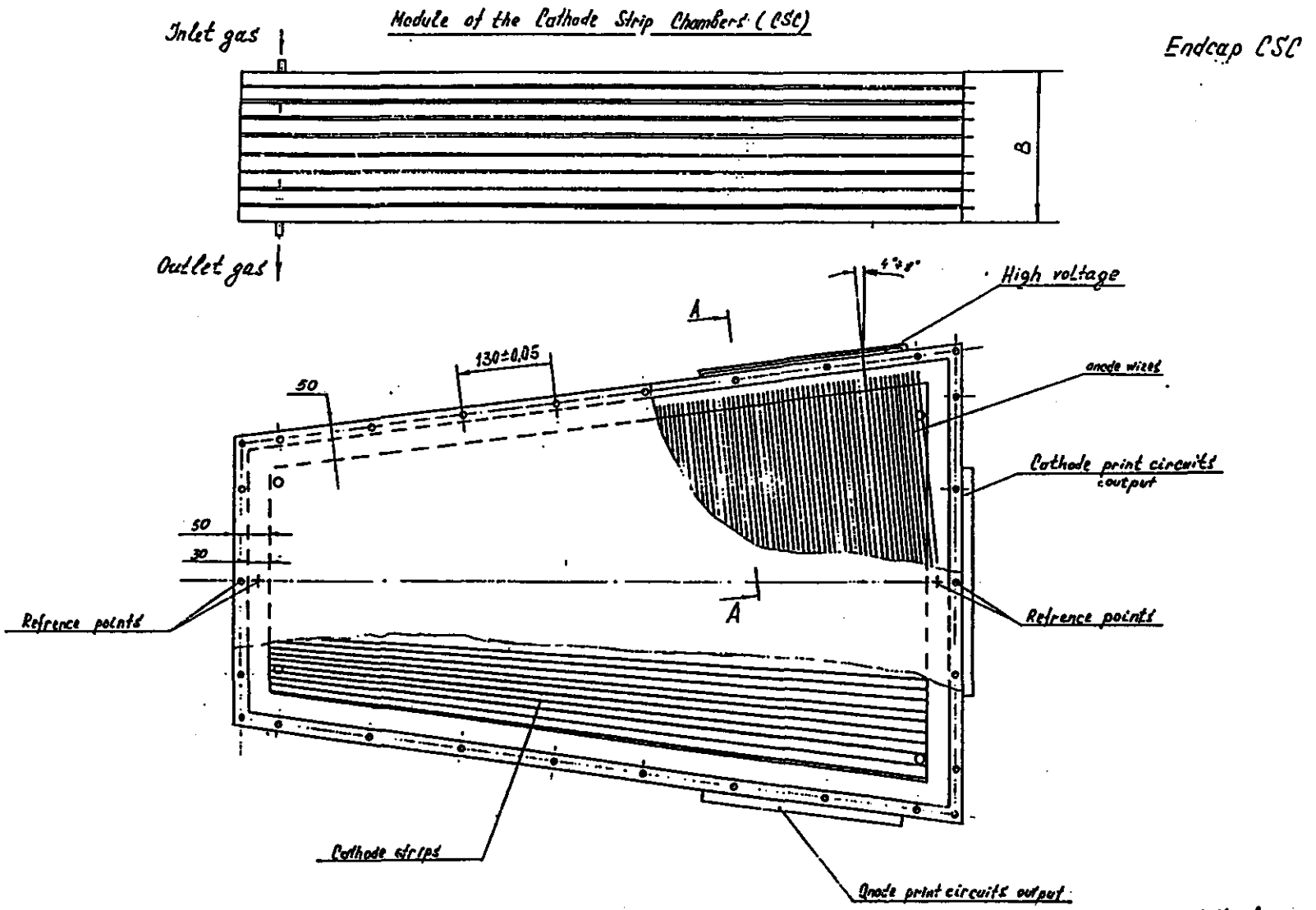

fig. 9.

A. Vorobyov
A. Krivshich
S. Patrichev
V. Rezmyslovich
02.93

Cross section CSC
(along the wires)
(A-A)

Endcap CSC

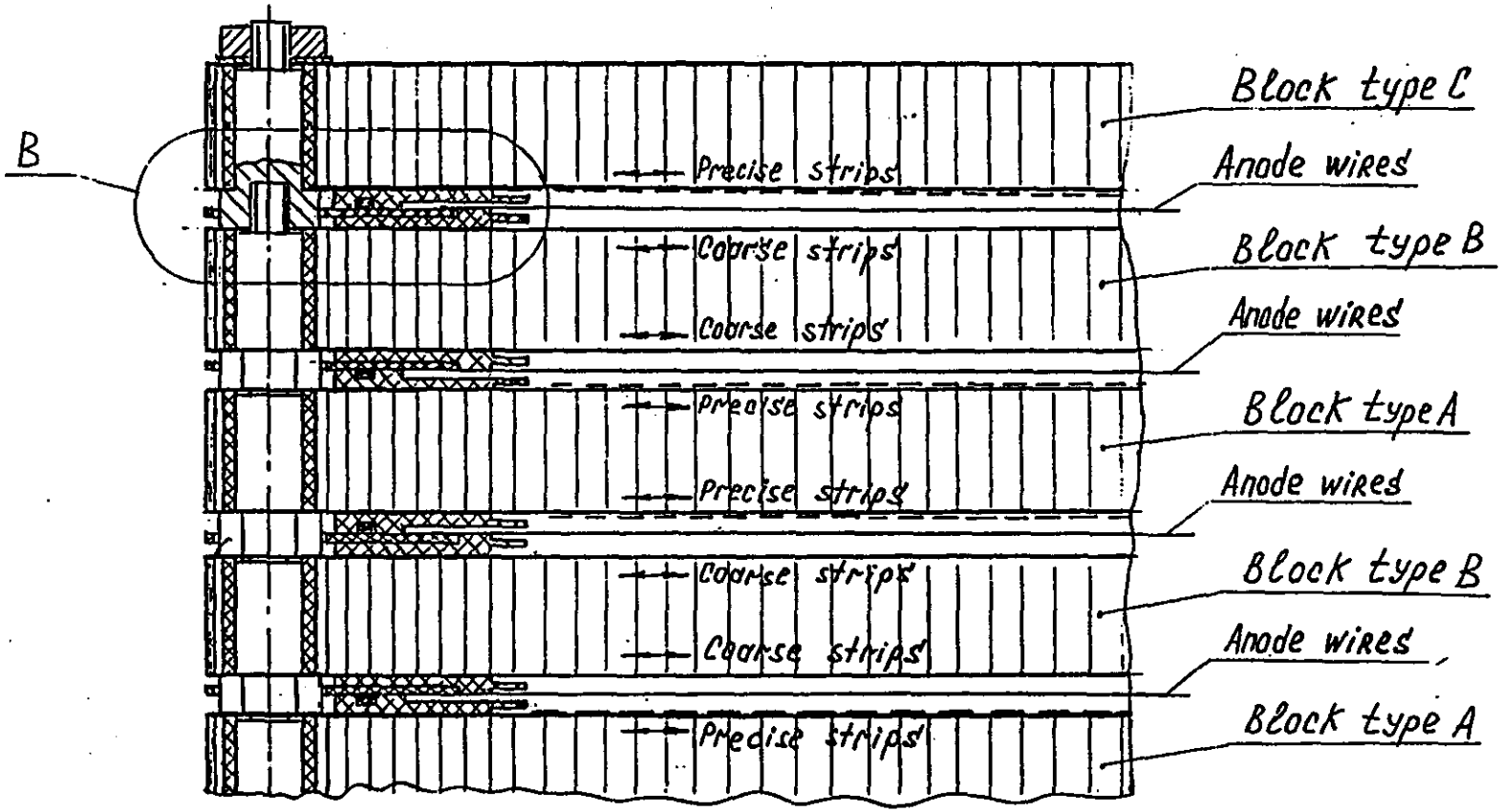

fig. 10.

A. Vorobyov
A. Krivshich
S. Patrichev
V. Razmyslovich
02.93

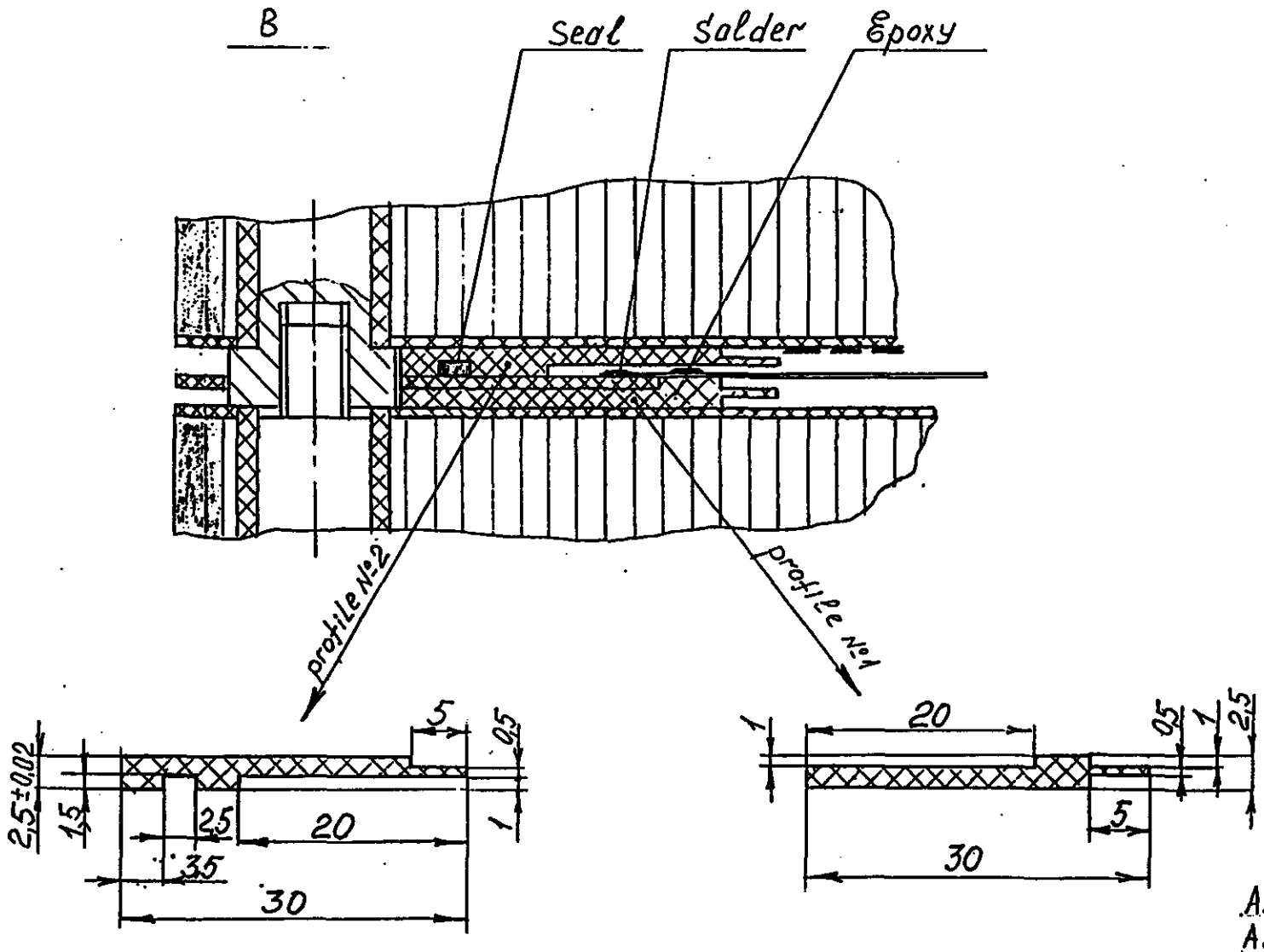

fig.11.

A.Varobyov
A.Krivshich
S.Patrichev
V.Razmyslovich
02.93

Endcap CSC

Cathode blocks
with the spacers

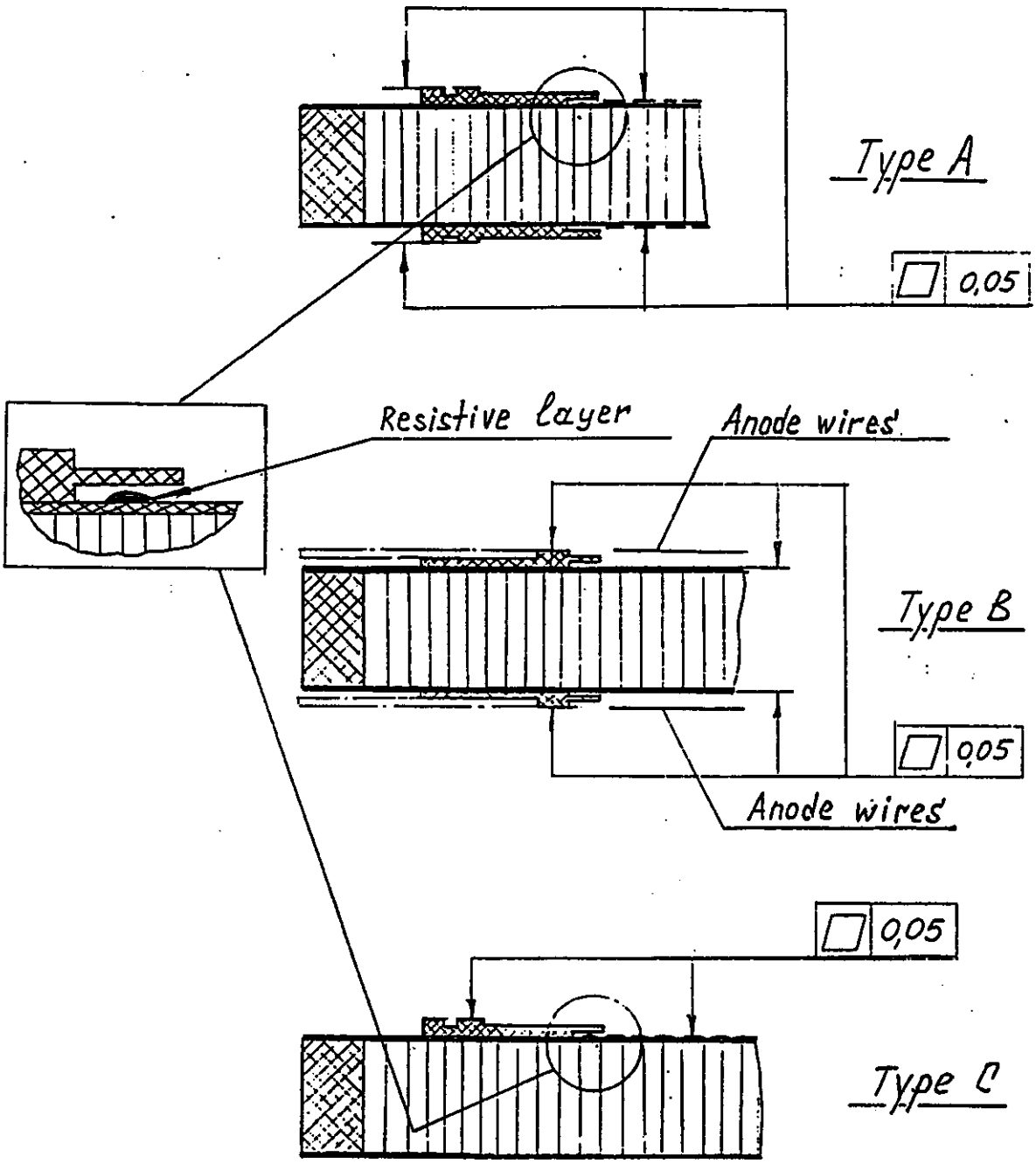

fig. 12.

A. Vorobyov
A. Krivshich
S. Patrichev
V. Razmyslovich

02.93

TECHNOLOGICAL CHAIN

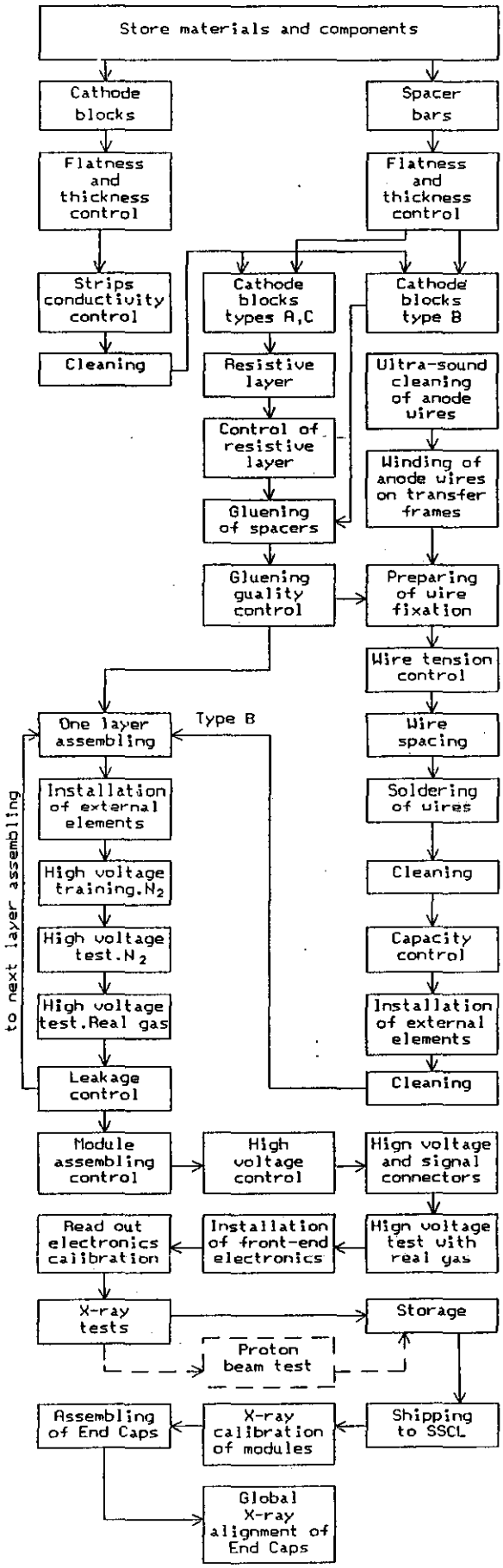

fig.13.

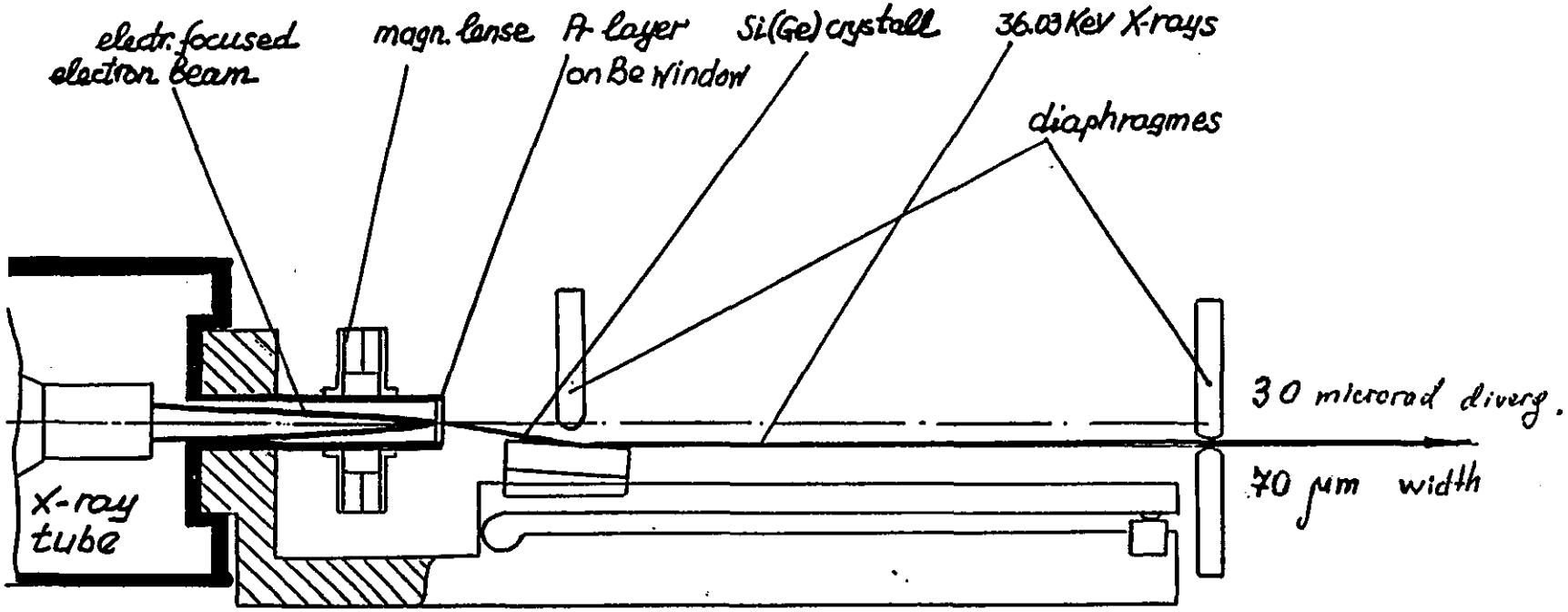

Fig. 14 Schematic view of the X-ray tube with monochromator.

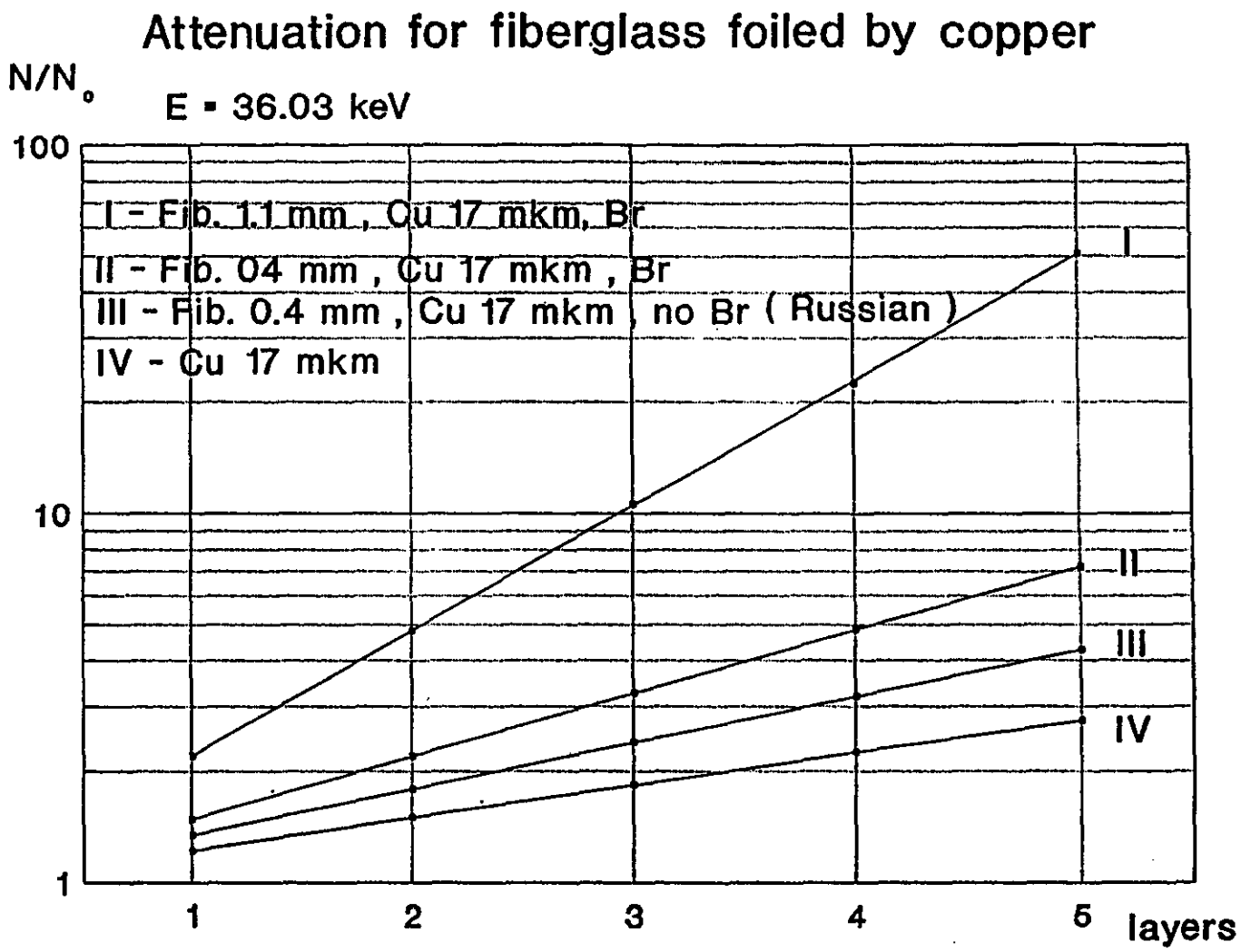
Attenuation for fiberglass foiled by copper
N/N₀
E = 36.03 keV
100
10
1
I - Fib. 1.1 mm , Cu 17 mkm, Br
II - Fib. 04 mm , Cu 17 mkm , Br
III - Fib. 0.4 mm , Cu 17 mkm , no Br (Russian)
IV - Cu 17 mkm
I
II
III
IV
1
2
3
4
5
layers

Fig.15.

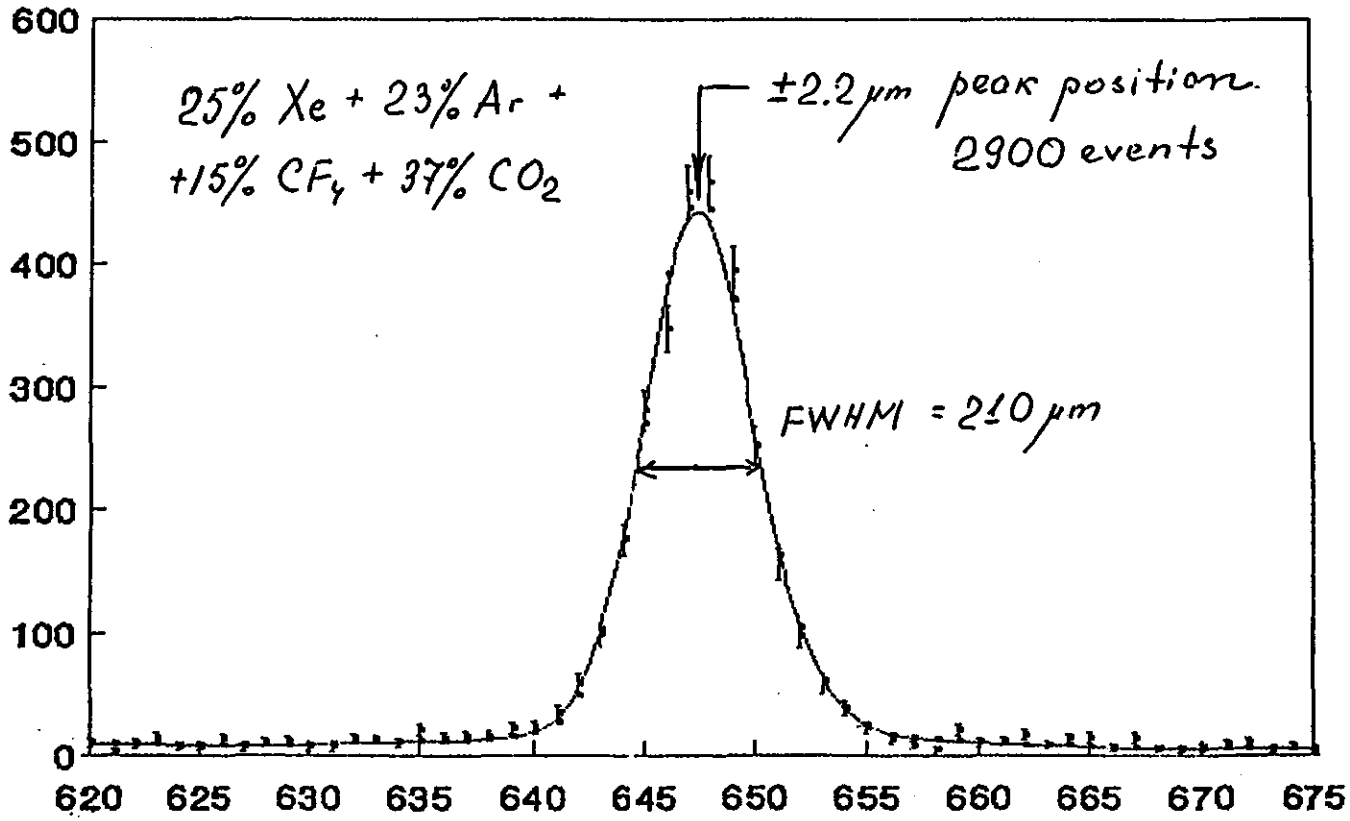

Fig. 16. X-ray beam profile measured with CSC.

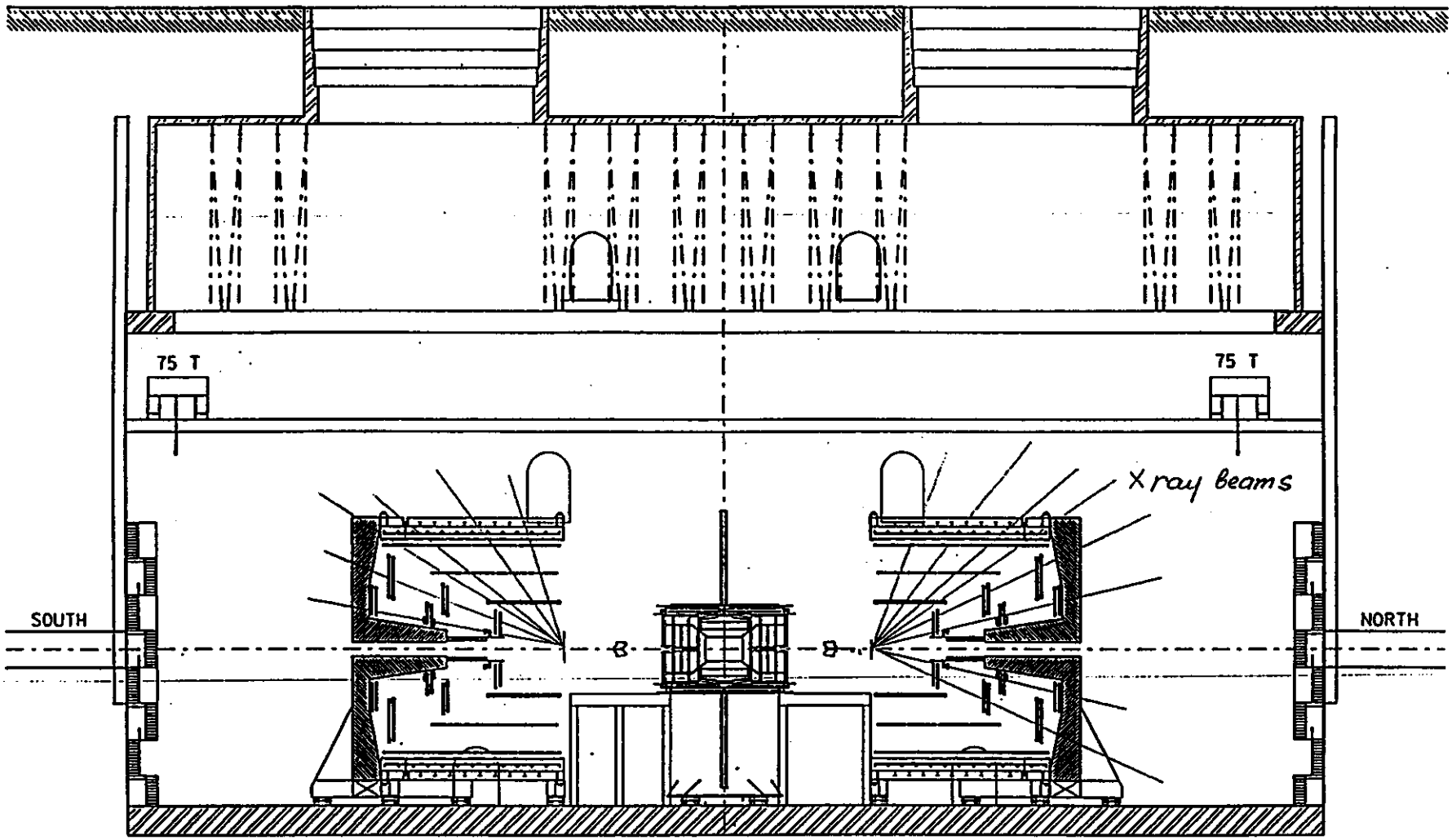

VACUUM SYSTEM AND FORWARD CALORIMETER INSTALLATION

FIG 17