GEM TN-93-342

Results of Stretched Wire Capacitive Pickup Tests at LLNL

Elden Ables
Lawrence Livermore National Laboratory

July 21, 1992

Abstract:

A test model of the wire detector was built and some preliminary tests were conducted.

Elden Ables
July 21,1992

RESULTS OF WIRE DETECTOR TESTS

A test model of the wire detector was built and some preliminary tests were conducted.
the detector consists of two plates 1cmX1.6cm separated by 1cm. a 10 mil wire is stretched across the gap between the plates (see figure 1). A sine wave of specified frequency and amplitude was applied to the wire and the attenuated amplitude was measured on the plates.
The oscillator used was a HP3114A and the voltmeter was a HP3458A. The position of the plates relative to the wire was moved using a Oriel precision translation stage with digital readout. The plate signals were coupled to the DVM with RG174 coax cable of equal length. The capacitance of the cable was measured at 80.7pF. the input impedance of the DVM is 1 M ohm in parallel with 140 pF
The first set of data was taken with the following parameters
Osc Frequency = 10.0 KHz
Osc amplitude = 0.707 volts RMS
position step size = 250 microns

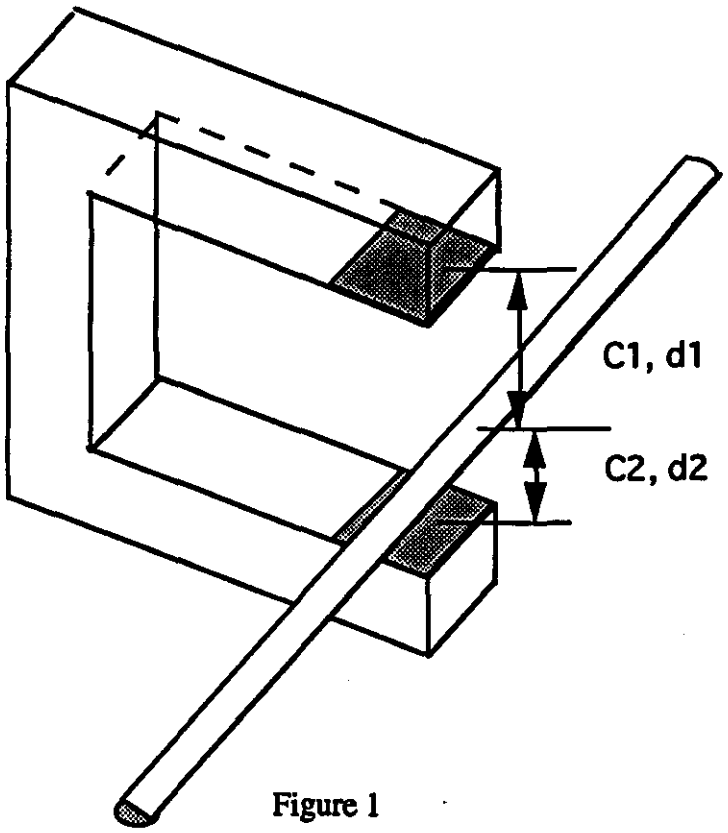

$$\frac{C1}{C2} = \frac{d2}{d1}$$

Figure 1

The data was taken using the circuit configuration shown in figure 2.

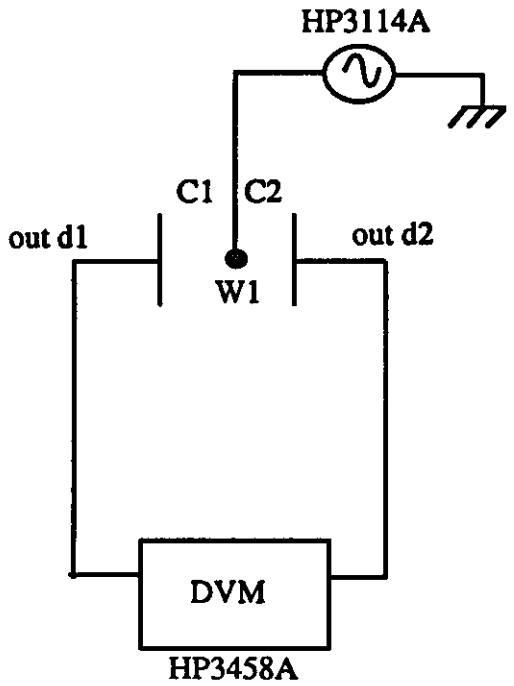

Figure 2

Where the electrical circuit looks like figure 3

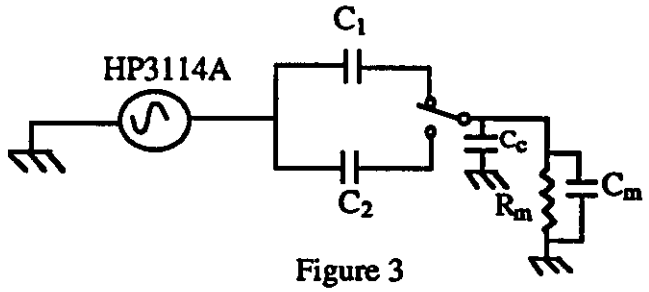

Figure 3

The data is plotted in the following figures 3 and 4 where the two plates are referred to as d1 and d2.

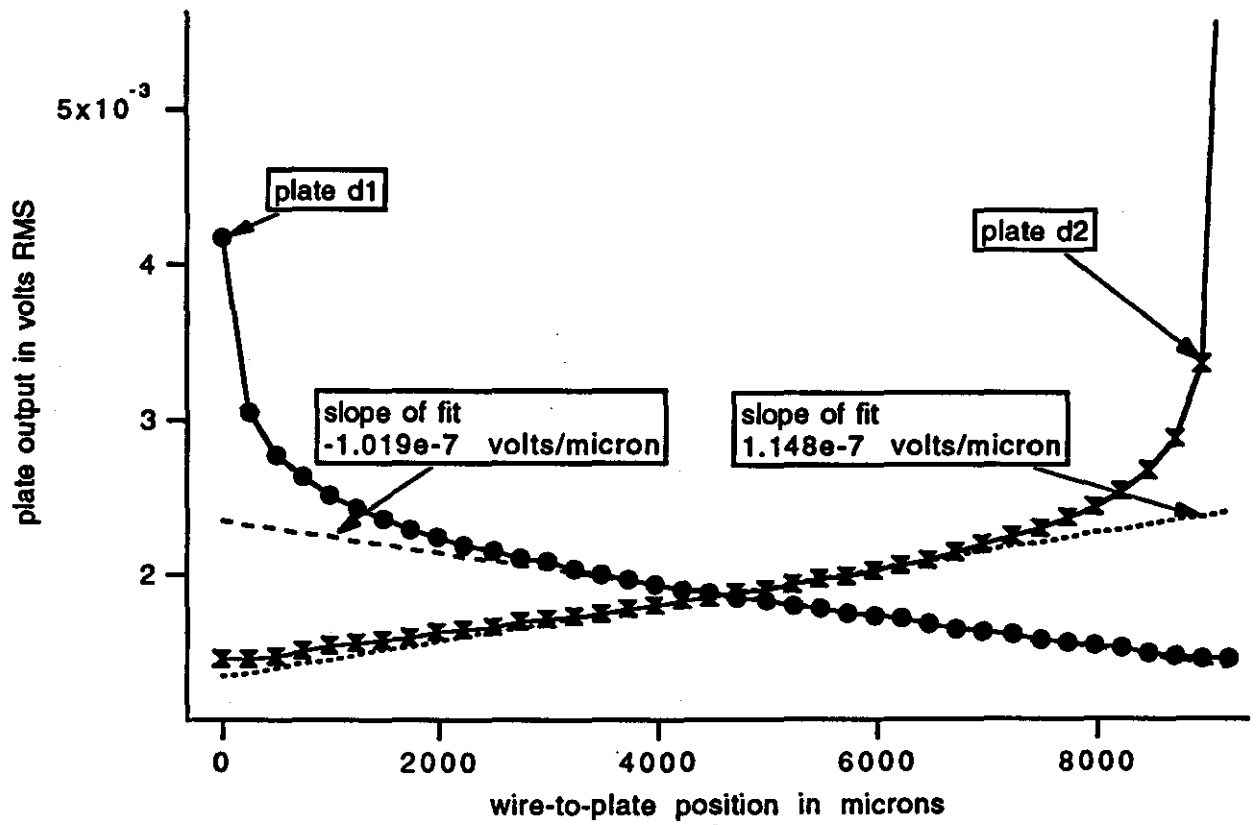

Figure 3

Figure 4 is a plot of $\frac{d1}{d1}$.

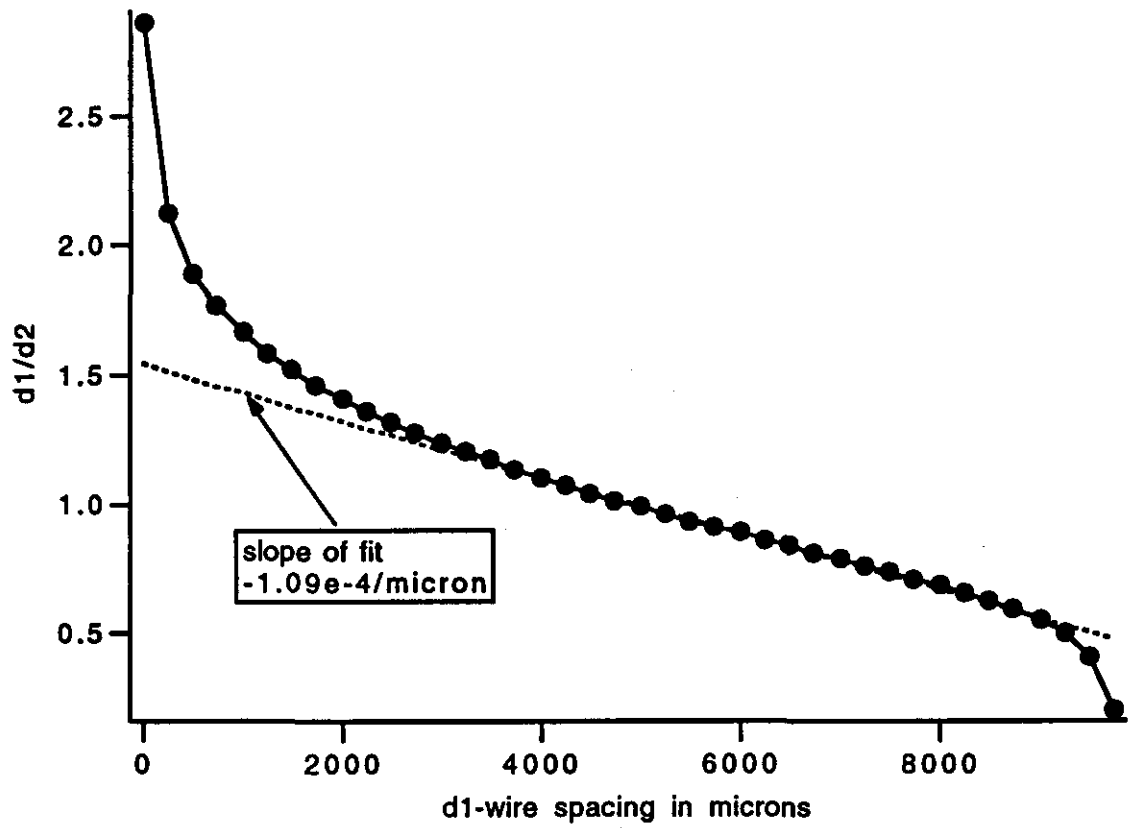

Figure 4

resolution and accuracy

To determine the error in reading due to noise, 25 readings, at a wire spacing of 500 microns, were taken and reduced to error values about the average. There also was a drift (with time) component that was taken out. the result is as follows

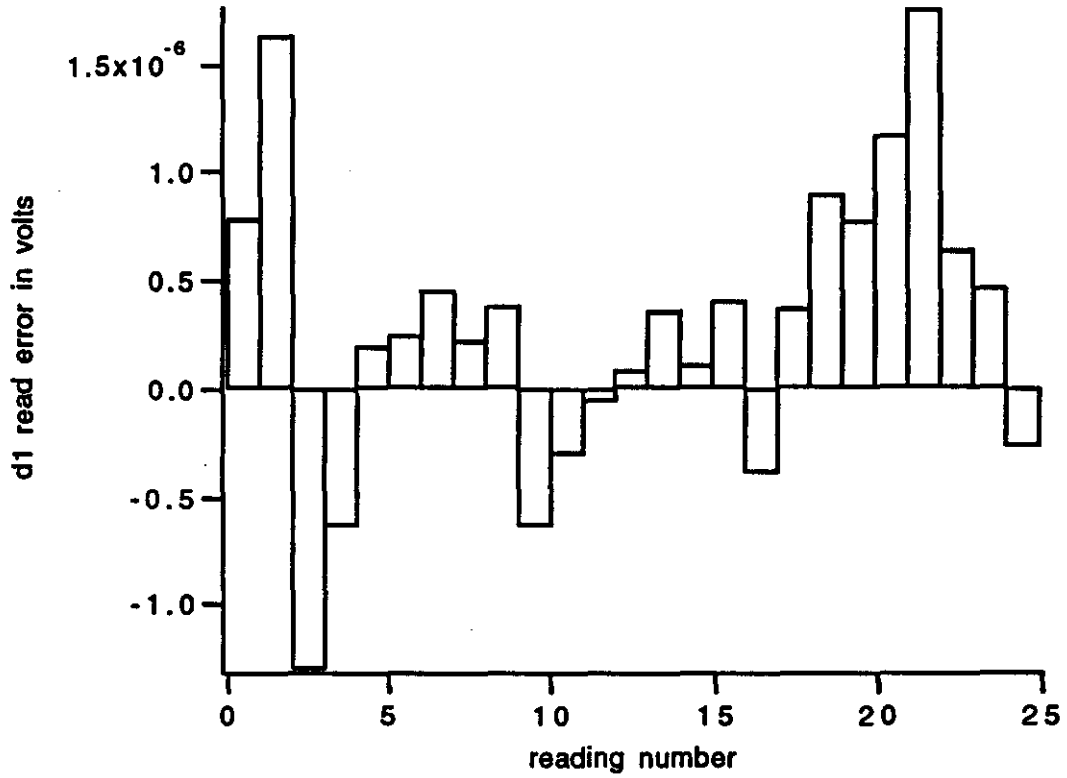

By applying the slope calculation in figure 2 the error in microns is displayed as follows

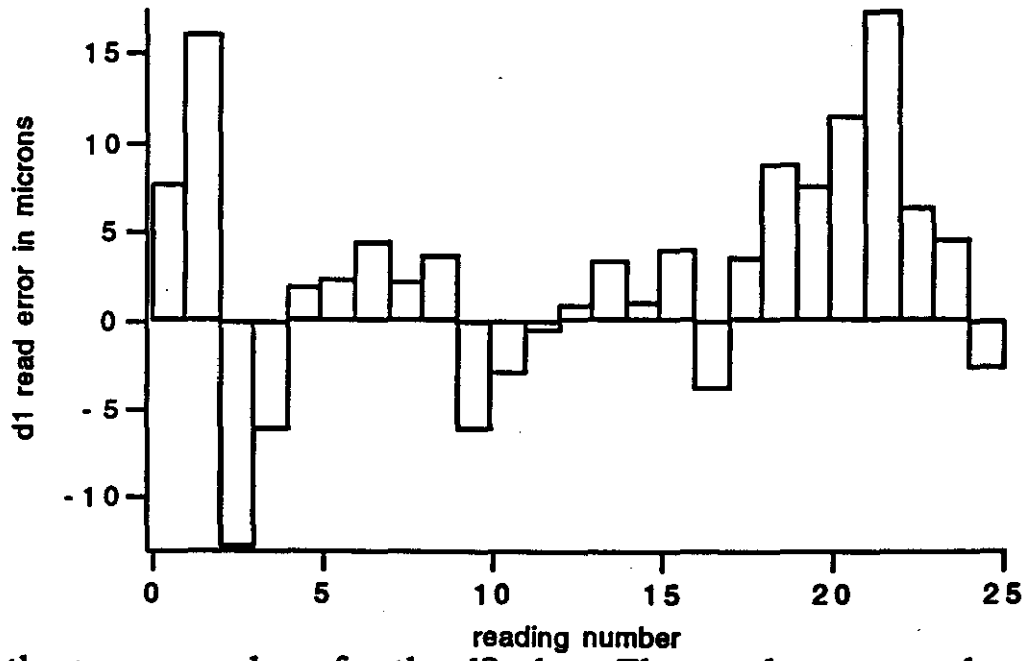

the same was done for the d2 plate. The results are not shown. The ratio of the d1/d2 readings were calculated and the average value subtracted. The result eliminated the drift component as shown in the following plot.

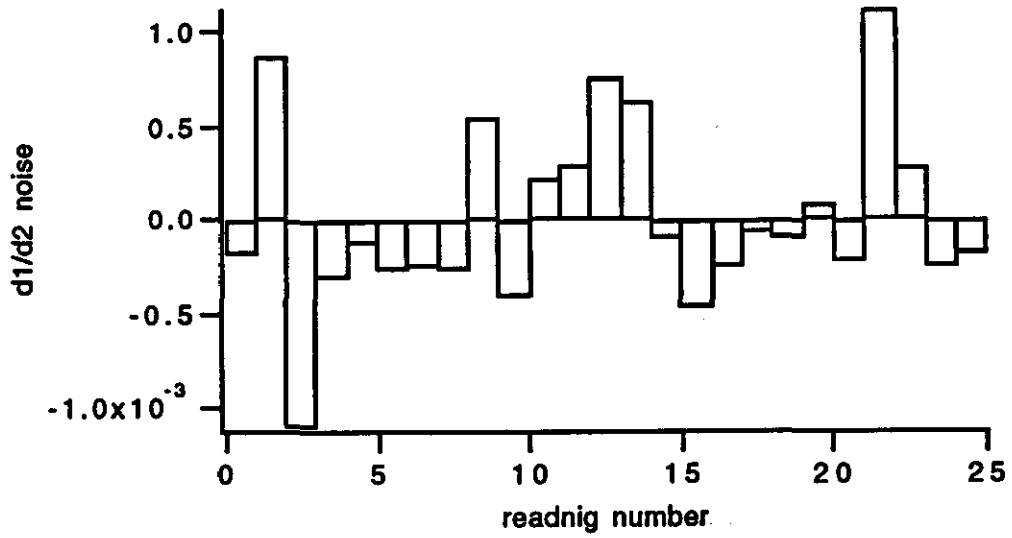

Taking the ratio of the d1/d2 readings and converting to microns yields

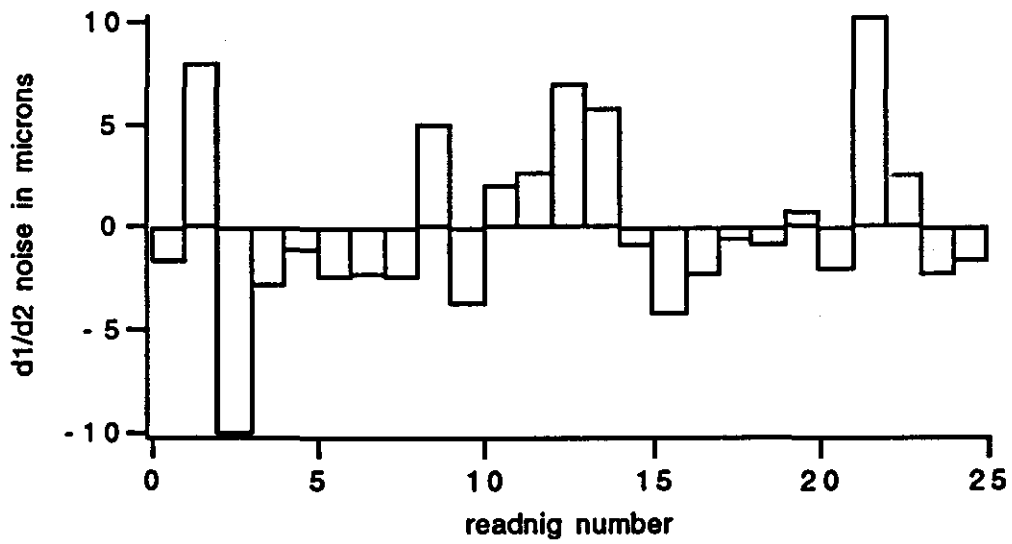

preliminary conclusions

The capacitive technique can be used to measure the position of the wire. 10 micron accuracy was achieved without using special techniques. By using a narrow band filter, a low capacitance switch, and a buffer amp, I feel that the 10 micron accuracy can be achieved. These components would be placed very close to the wire detector to minimize stray capacitance. The current range is 8000 microns. This could be increased to the 10000 microns desired by increased spacing of the plates.