GEM TN-93-341

Muon/Magnet Alignment Meeting Notes

Richard Sawicki
Lawrence Livermore National Laboratory

September 22, 1992

Abstract:

The following is a summary of the magnet/muon alignment meeting held on September 16, 1992 at the SSC Laboratory.

Superconducting Super Collider Laboratory
2550 Beckleymeade Avenue, Mail Stop 2005
Dallas TX 75237-3946
(214) 708-6325
Fax: (214) 708-6088

Memorandum

To: Distribution
From: R. Sawicki
Subject: Muon/Magnet alignment meeting notes 9/16/92
Date: Sept. 22, 1992

The following is a summary of the magnet/muon alignment meeting on Sept. 16, 1992 at the SSCL.

1) Magnet coils must be radially aligned with respect to each other to about 1 inch. J. Bowers will solicit a technical evaluation to confirm this number.

2) Placement of coils relative to the vacuum vessel can be adjusted after the magnet has been turned to the horizontal position in the surface facility

3) Coil will not be prestressed to achieve a desired shape before activation

4) Magnet will be brought to liquid nitrogen temperatures in the surface facility. This will provide a convenient opportunity to measure vessel deformations. Distortion of vessel should be measured before, during and after cold temperature has been achieved.

5) Radially extending metalic rods will be attached to the coil to permit measurement of the coils location relative to the vacuum vessel. Eight rods located at each coil end will be have precision lengths of a couple hundred microns.

6) Inexpensive, glue-on fiducials will be located on the inner radius of magnet end flanges. These will be used to reference the figure of the vacuum vessel to the folding bracket alignment fiducials.

7) Folding bracket alignment fiducials (8 on each end) will be attached to the outer radius of the vacuum vessel flange. Taylor/Hobson balls will be used to locate these fiducials relative to the fiducials on the coil and flange inner radius.

8) M. Jones will investigate surveying techniques that will work in a magnetic field and report on his findings in one month.

9) F. Nimblett will determine if radial adjustability of muon sectors is required.

10) J. Bowers will determine the status of the magnetic mapper design.

11) Surveying fiducials on muon truss structure will probably be precision hole brackets that accommodate precision tooling balls.

12) Four truss fiducials will be located on each end of each muon sector. These will be used to measure global pointing of the muon sectors during installation into the magnet. They will also be used during chamber installation to properly orient the chambers relative to the truss structure.

13) Final alignment of the muon system must occur before the magnet is closed. N. Gober will modify the integration schedule accordingly.

14) Attachment of the muon structure support plate to the magnet should be completed in the surface facility. However, drilling of the support hole should not occur until after the magnet test has been performed and the activation motion of the magnet has been confirmed.

15) Precision levels should be attached to the muon sectors to monitor motion of the sector during magnet activation and detector operation.

Attached are four tables which summarizes the alignment sequence which was developed during the meeting. Please review and let me know if I have accurately represented what was agreed to at the meeting. Comments are appreciated before Oct. 1, 1992.

cc: J. Bowers
O. Fachler
N. Gober
M. Harris
C. Johnson
M. Jones
F. Nimblett
B. Pedrotti
C. Van Bibber
C. Wuest

Magnet/muon system alignment sequence

Step #	Illustration	Procedure	Comments
1	<u>Magnet Fiducialization</u> 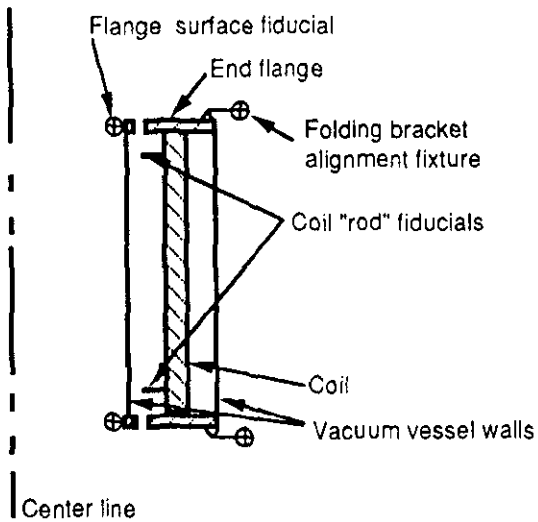 	1) Coil assumed to be in vertical position, vacuum vessels walls not yet attached 2) Place coil rod ficucials onto coil (8 equally spaced near either end) 3) Place flange surface fiducial (8 inexpensive glued on reference) on inner radius of each flange 4) Accurately measure (500 microns) placement of rod ends to surface fiducials 5) Assemble coil into vacuum vessel 6) Locate 8 folding alignment brackets to the outer radius of each magnet flange 7) *Measure roundness of flange using* surface fiducials 8) *Verify surface to rod fiducial* placement 6) Measure bracket to surface fiducial placement within 500 microns	1) Length of rod fiducials accurate to 500 microns 2) Folding bracket fiducial placement is not critical - precision measurement to other *fiducials is important* 3)
2	<u>Magnet deformation calibration</u> 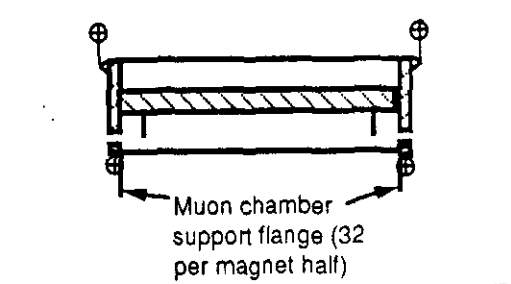 	1) Rotate to horizontal orienttion 2) Measure roundness of end flanges 3) Measure surface to rod fiducial to confirm concentricity of flange and coil (< 20 mm) 4) Adjust if necessary 5) Attach muon support plates with fiducials 6) Measure location of plate fiducials to floding bracket fiducials 7) Cool assembly to LN 8) Measure relative displacement of folding bracket, coil and plate fiducials 9) *Return to room temperature and* remeasure fiducial locations	1) Coil to vacuum vessel tolerance must be confirmed

Magnet/muon system alignment sequence (continued)

Step #	Illustration	Procedure	Comments
3	<u>Initial magnet activation</u> 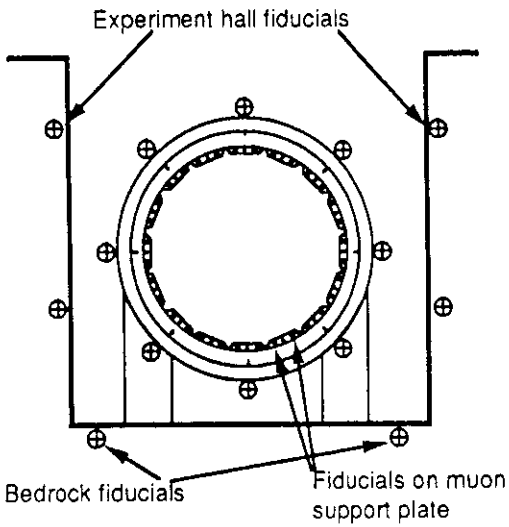 	1) Magnet is located in the experiment hall in the installed position just prior to initial test 2) Magnet is centered on beamline as defined by hall fiducials (< 10 mm) using folding alignment brackets with Taylor/Hobson balls 3) Coil placement relative to magnet is verified 4) Activate magnet 5) Measure movement of magnet using folding alignment bracket 6) Measure magnetic field and relate to external fiducials 7) Measure tilt of muon brackets using precision level 8) Deactivate magnet 9) Verify that magnet returns to initial position 10) Drill postioning holes in muon support brackets compensating for anticipated magnet motion	1) It is assumed that surveying can be performed in an .8 T magnetic field (to be confirmed)
4	<u>Muon sector fiducialization</u> 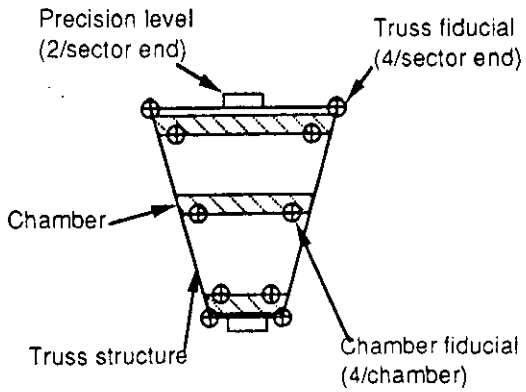 	1) Place four truss fiducials on truss structure and measure placement with 200 micron accuracy 2) Locate inner and outer radius chambers relative to truss fiducials 3) Place middle chambers in truss to straight line tolerance 4) Verify chamber to truss fiducial measurement 5) Install reference precision level 5) Measure chamber to truss fiducial relationship in proper orientation relative to gravity	

Magnet/muon system alignment sequence (continued)

Step #	Illustration	Procedure	Comments
5	Sector installation 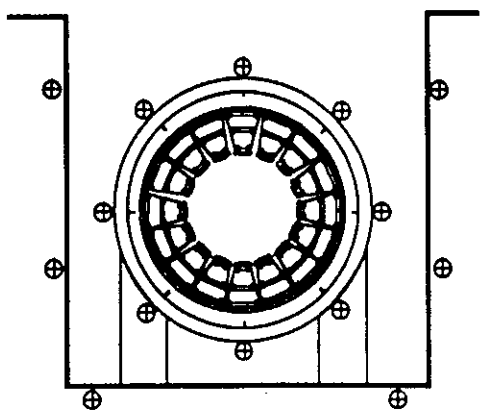	1) With magnet in the extracted postion install all muon sectors 2) Coarsely adjust placement of muon sectors relative to magnet folding bracket alignment fiducials 3) Verify truss fiducial to chamber fiducial alignment 4) Verify precision level orientation relative to truss fiducials	1)
6	Final alignment 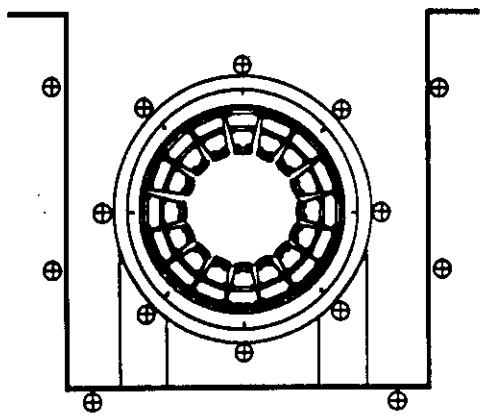	1) Place magnet into position next to central support structure with accuracy relative to hall fiducials < 10 mm 2) Adjust global pointing of individual sectors relative to hall fiducials, accuracy < 2 mm 3) Confirm chamber fiducial to truss fiducial relationships as required 4) Establish precision level orientation	

Magnet/muon system alignment sequence (continued)

Step #	Illustration	Procedure	Comments
7	Detector activation 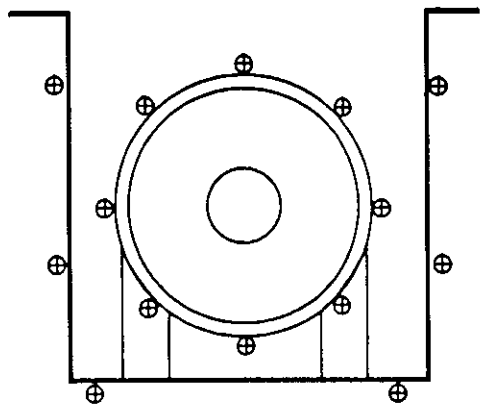	1) Install FFS 2) Confirm position of folding bracket alignment fiducials (relative to each other and to hall fiducials)and precision levels 3) Activate detector 4) Confirm operation of muon system straight line monitors 5) Validate orientation of chambers with precision levels, adjust as required 6) Measure folding bracket alignment fiducials relative to each other and experiment hall fiducials	1)
8	Operation monitoring 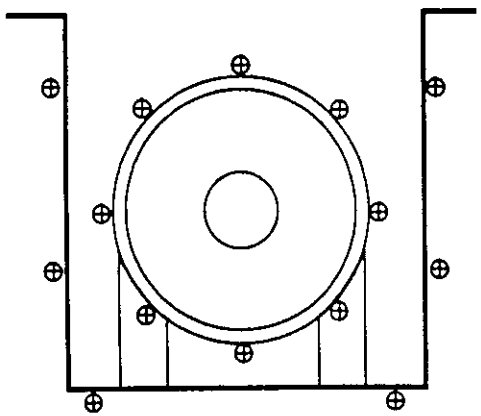	1) Monitor straighline monitors and precision level readfings 2) If possible monitor folding bracket alignment fiducials 3) Confirm global pointing with background muons if posssible, adjust as required	1) Surveying equipment which can operate in a magnetic field must be identified to satisfy 2).