GEM TN-93-338

Muon Chamber Alignment Alternatives

R. Sawicki
Lawrence Livermore National Laboratory

March 1993

Abstract:

A presentation of 4 alternatives for the GEM Muon Chamber Alignment:

- X-ray
- Laser
- Stretched Wire Alignment Technique (SWAT)
- Video Enhanced Visual Alignment System (VEVAS)

Muon chamber alignment alternatives

Meet June 22 time TBD

- Xray
  - straight line monitor
  - wire plane verification

- Laser
  - laser beacon
  - laser splitter

- Stretched Wire Alignment Technique (SWAT)

- Video Enhanced Visual Alignment System (VEVAS)

Xray alignment technique has some interesting advantages

- Xray alignment technique has been established as a viable tool in "downhole" nuclear tests

- Key features are
  - simple geometric optics
  - penetrate opaque obstacles
  - high resolution
  - immune to air turbulence
  - no focusing

- There are disadvantages
  - safety
  - cost
  - integration time = 10 minutes (w/CCD)

- Biggest potential application is to serve as an alignment reference above ground to verify alignment and accuracy of operational alignment system

- With film, range can be increased dramatically
  - resolution needs to be determined

(NOT FOR GEM)

Requirements and Design Study

Pre-Design of the LOS Model

Feature/Fid Description

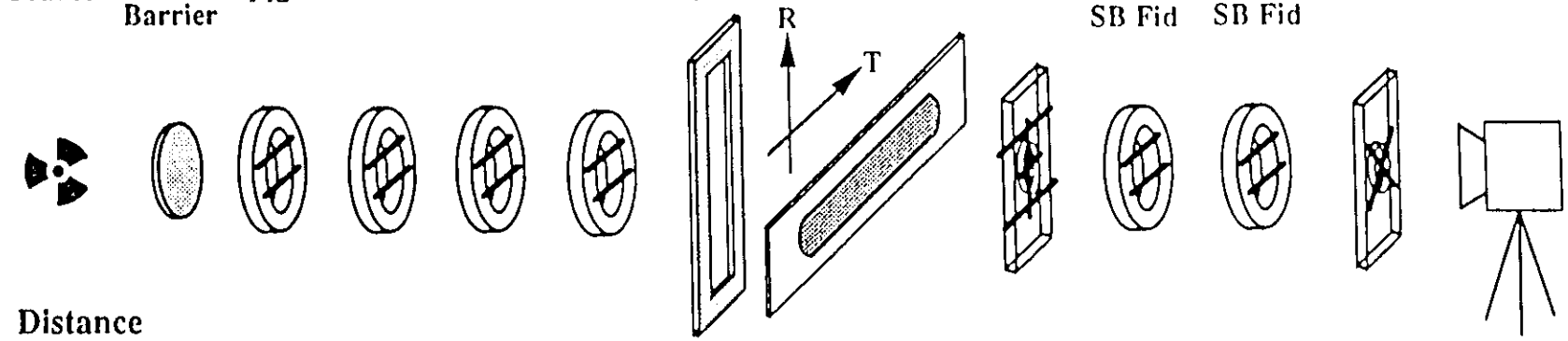

Source	Vacuum Barrier	Fid	Fid	Fid	Fid	Slit	Window	USB Fid	U T/B SB Fid	L T/B SB Fid	LSB Fid	Camera
Distance												
0	3"	178.82"	249.82"	275.82"	351.82"	544.82"	881.07"	888.97"	917.82"	952.82"	1007.08"	1014.99"
Magnification												
N/A	N/A	5.67	4.06	3.68	2.88	1.86	1.15	1.14	1.09	1.05	1.01	N/A

Minimum Object Size Using O/S Ratio protocol where S = 75 μm

N/A	N/A	0.011"	0.011"	0.010"	0.009"	0.006"	0.002"

Selected Object Sizes (projected image must be > 0.005" at image plane for camera system)

N/A	N/A	0.010"	0.010"	0.009"	0.008"	0.020"	0.020"	0.010"	0.006"	0.006"	0.010"

Fiducial Designs

Design Summary

- Predicted Tolerances using x-ray camera system
  - Straightness on the order of 0.7 urad.
  - Position error 0.001".

- X-ray Source
  - Standard Kevex with tungsten target
    - 20 - 120 keV
    - Air cooled, 120 ^{0}F max.
    - Output: 25 watts with 100 μm spot, 10 watts with 50 μm spot size.
  - Nominal operating voltage, 50 - 69 keV.

- Target Fiducials
  - Material, tungsten.
  - Minimum feature diameter determined using O/S Ratio protocol with source diameter equal to 75 μm.

- Primary camera, Cohu vidicon. Secondary camera, Fairchild CCD.

- Predict approximate image acquisition time to be 12 minutes nominal +/- 3 min.

Fiducial Designs

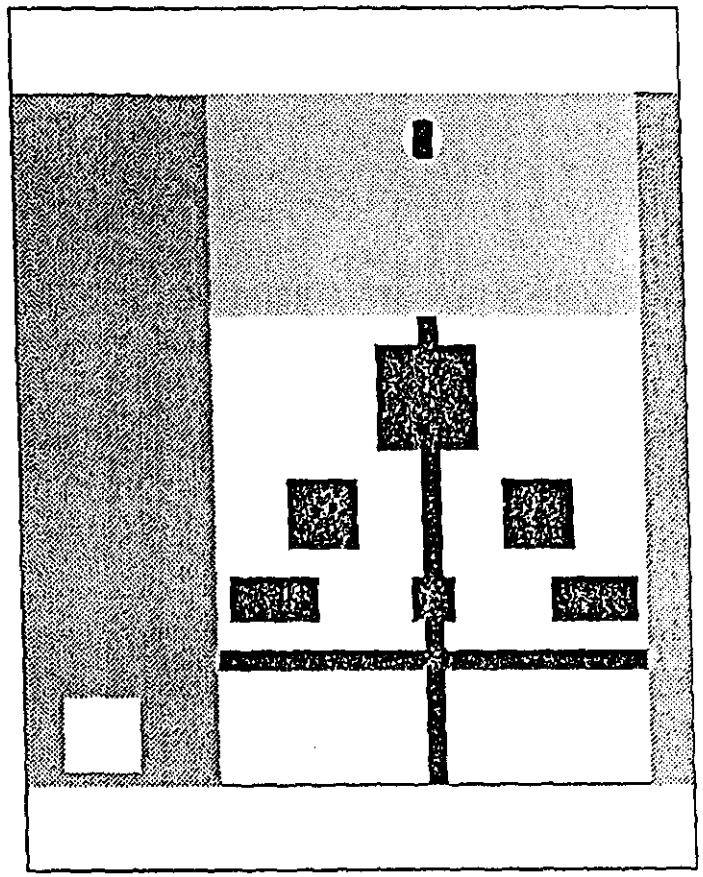

Designed CCD Camera View
at Edge of Quill Window
when Aligned

Designed CCD Camera View
at Center of Slit Aperture
when Aligned Showing
Strongback Fids

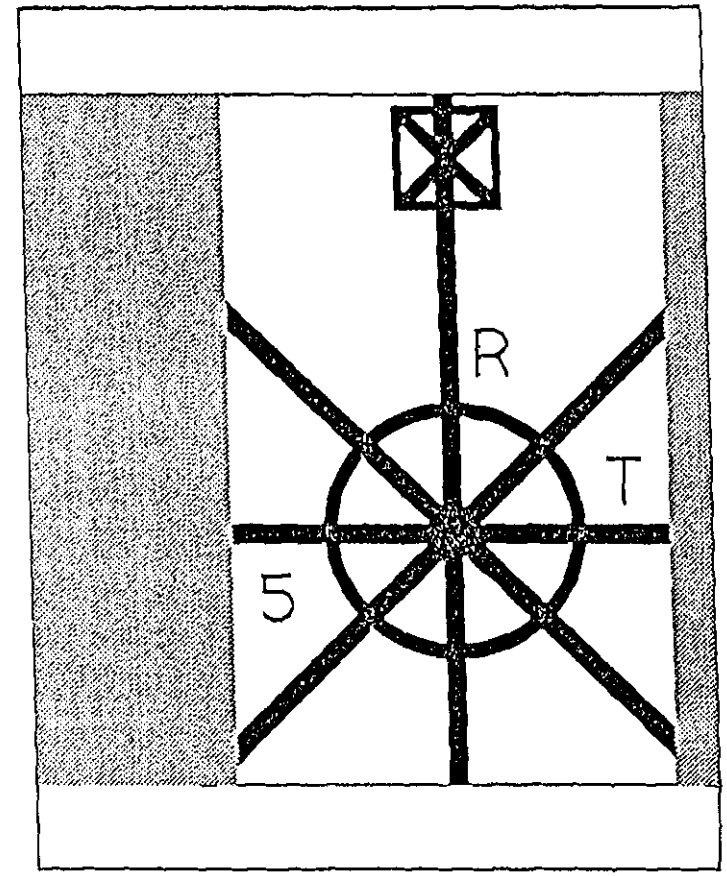

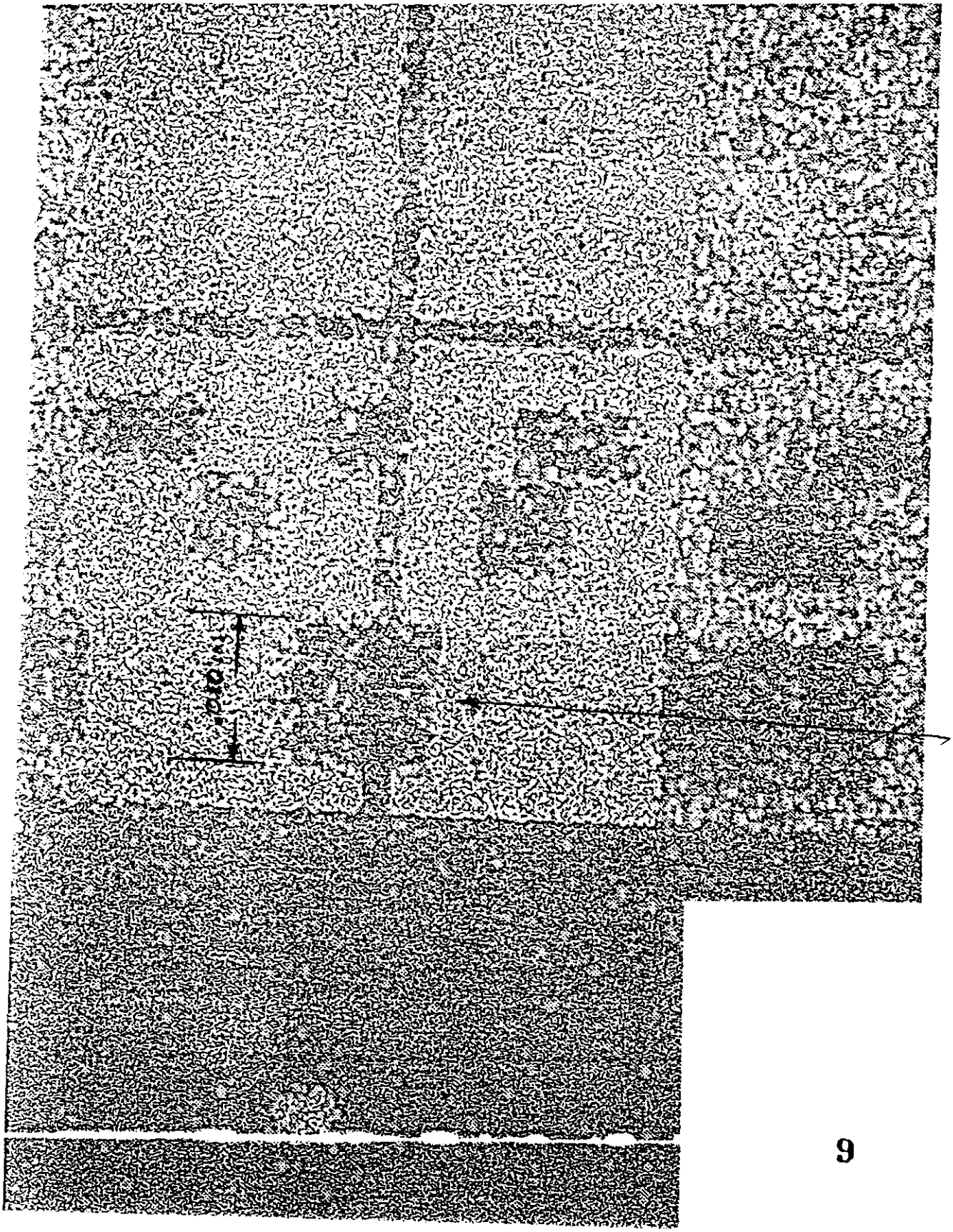

X ray IMAGE OF 0.010 IN. WIRE AT 70 FT.

GEM xray alignment setup

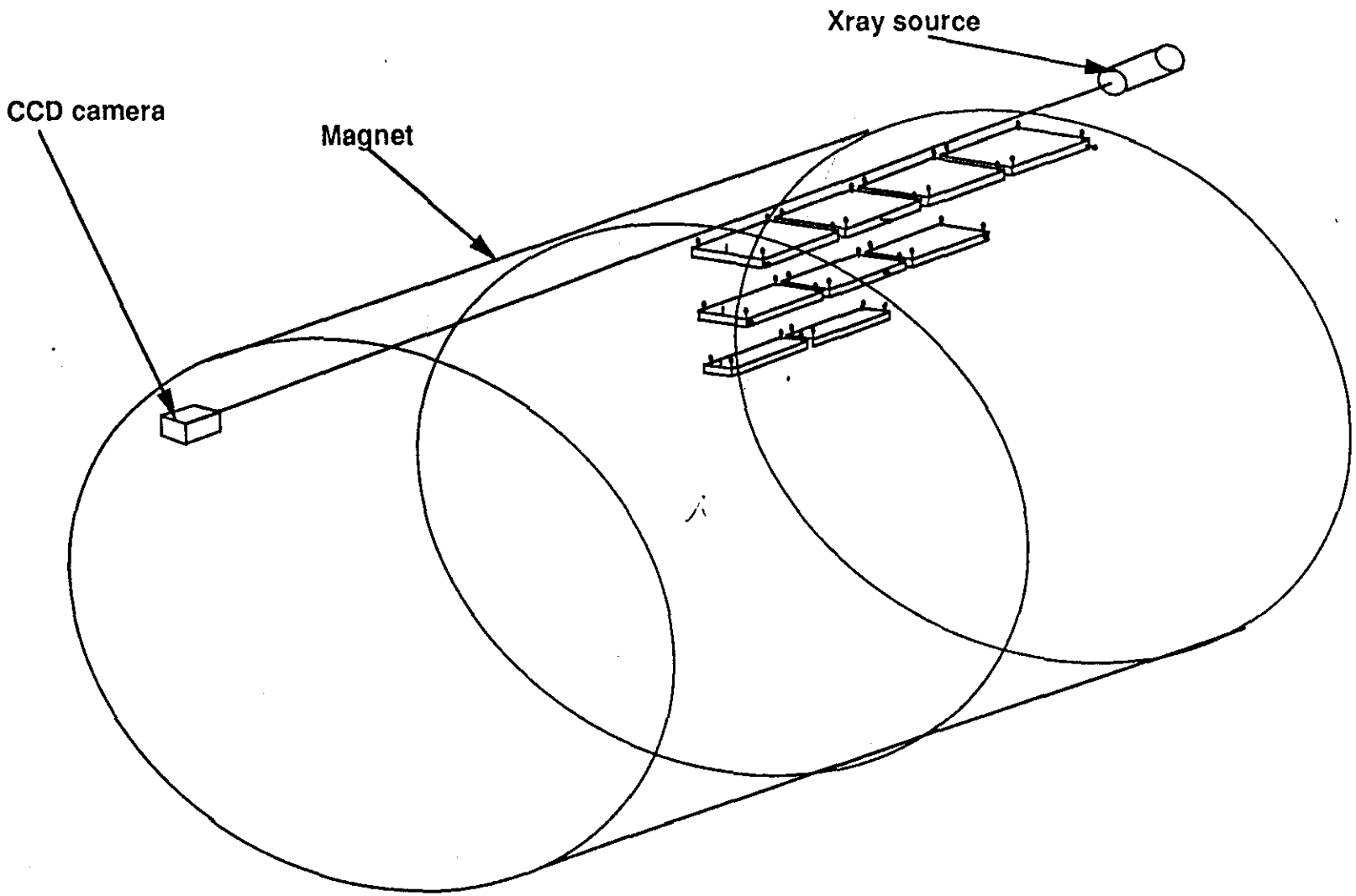

X-ray Alignment Principles

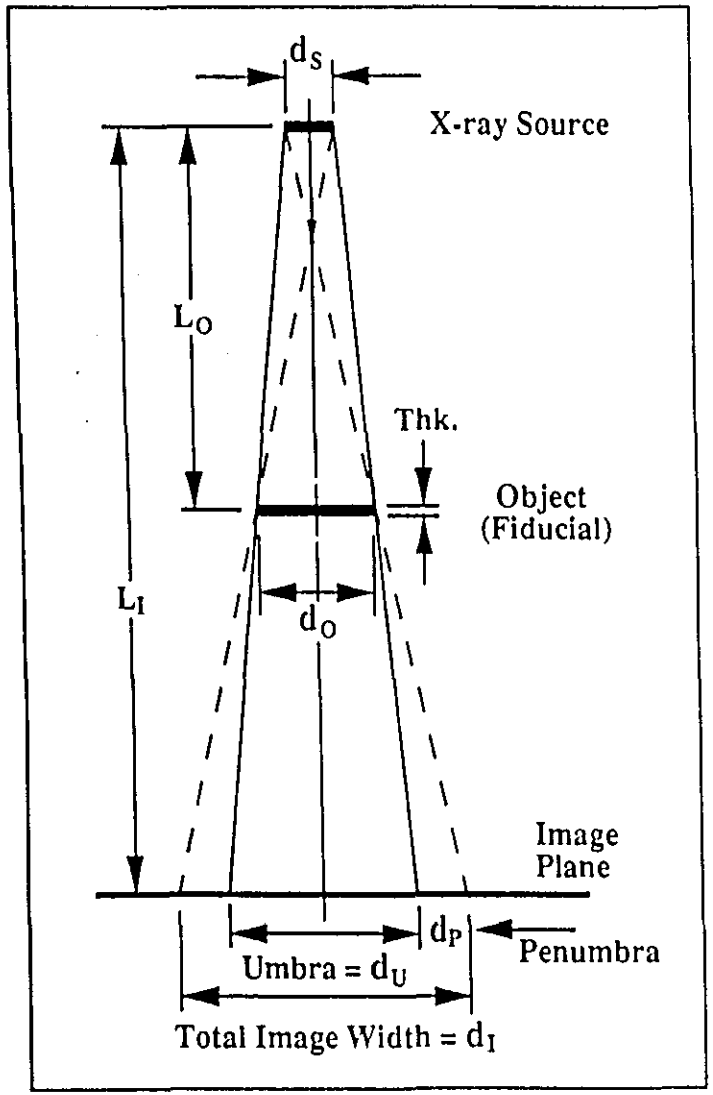

Geometric Relationships

"The projected image of the fiducial is made up of two regions, the umbra and penumbra".

Mathematical Relationships

1) Umbral sharpness, X_U

$$X_U = \frac{d_U}{d_I}$$

2) Object-to-Source Ratio, d_O / d_S, or O/S

$$\frac{d_O}{d_S} = \left(\frac{1 + X_U}{1 - X_U}\right)\left(\frac{L_{I/O} - 1}{L_{I/O}}\right), \text{ where } L_{I/O} = \frac{L_I}{L_O}$$

Guidelines

Based on the experimental characterization of our system components, an O/S Ratio > 65% is required.

Xray imaging performance

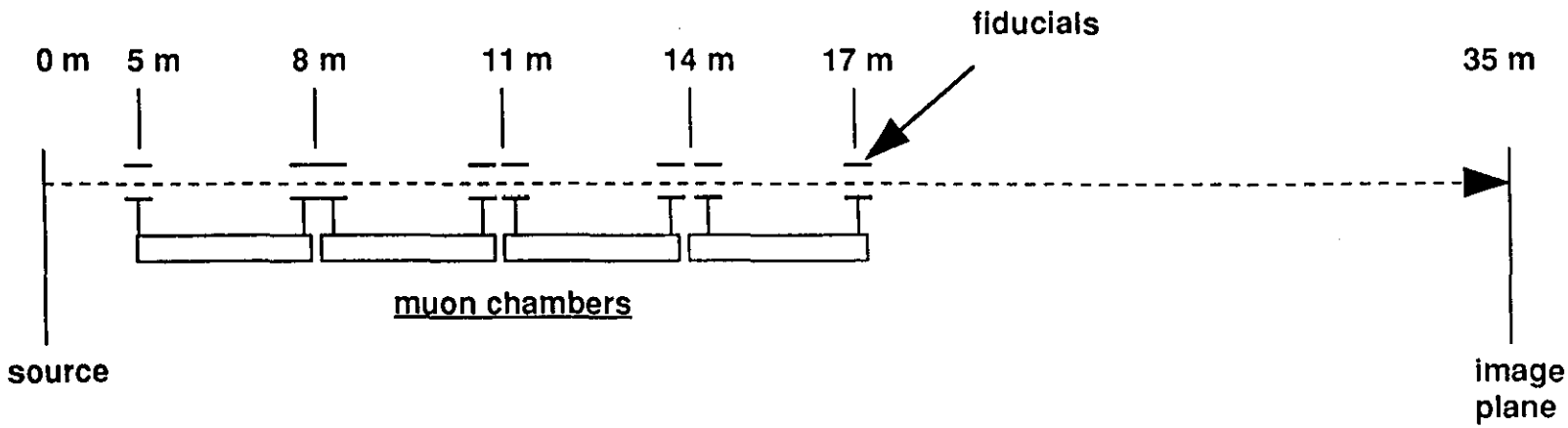

Distance from source (m)	5	8	11	14	17
magnification	7	4.4	3.2	2.5	2.1
Maximum wire size -microns (in)	404 (.016)	364 (.015)	324(.013)	282(.011)	256 (.010)
Image width-microns (in)	2828(.11)	1602(.064)	1036(.041)	705(.028)	538 (.021)
resoltuion-microns	7.1	11.4	15.6	20.0	23.8
range- mm	.69	1.23	1.79	2.3	2.8

Wire size=(1+sharpness) / (1-sharpness) * (mag-1) / mag * source diameter
Image size = wire size * magnification
Resolution=pixel size * 2/magnification
Range = (array size -image size) / (2* magnification)
Source diameter = 100 microns

Wire/fiducial placement can be verified with radiography

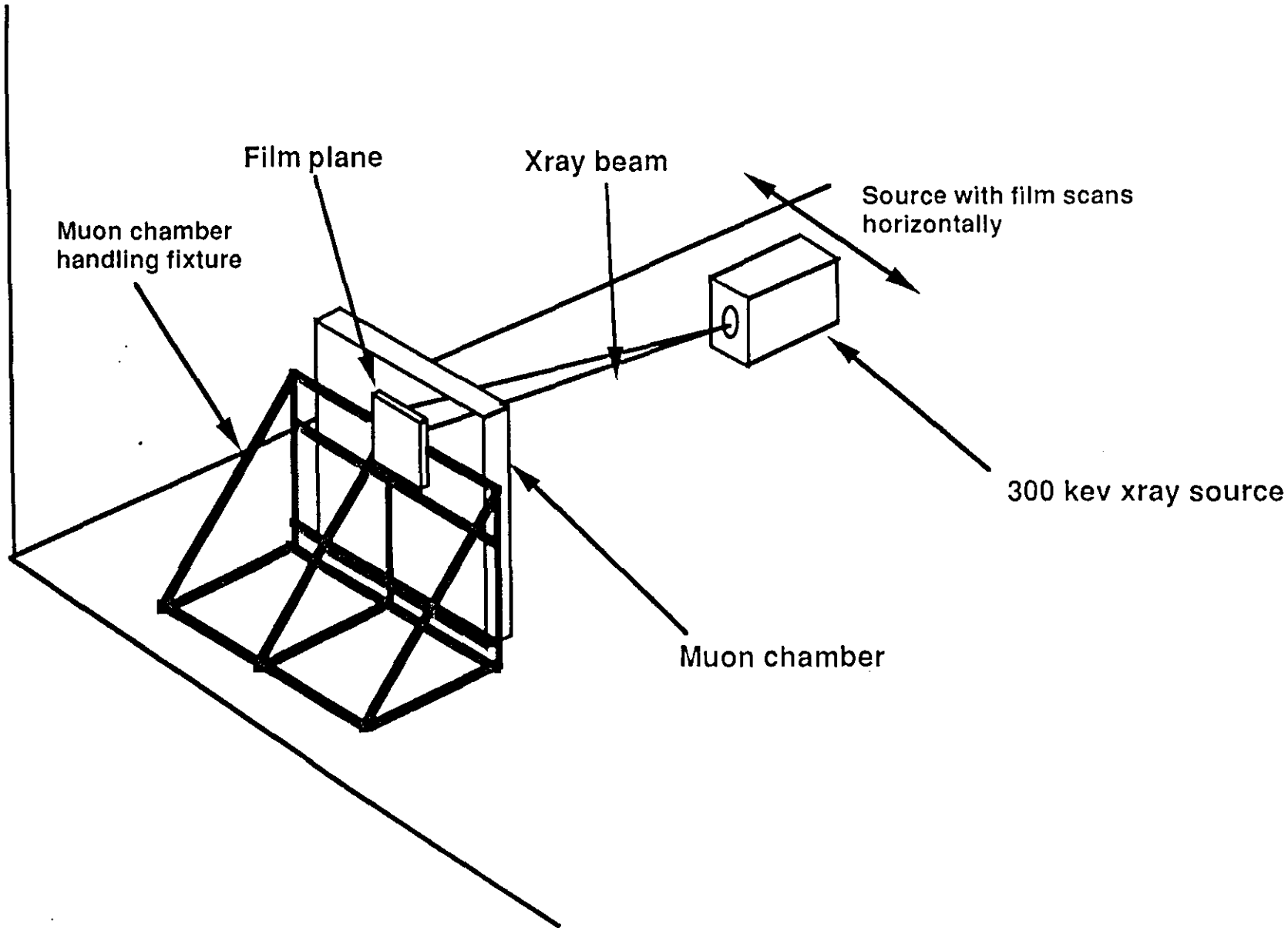

Xray path through muon chamber

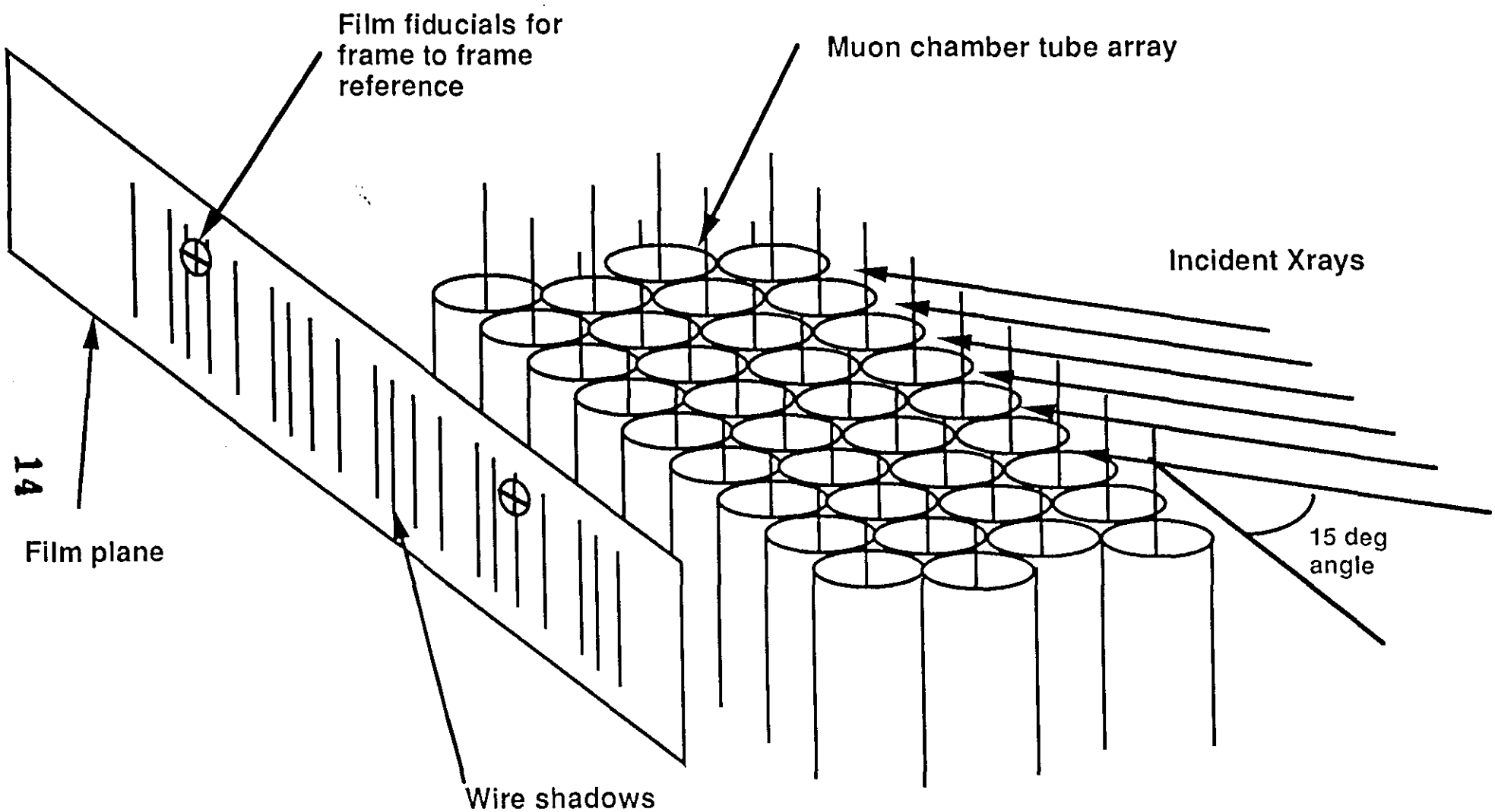

At a 15 degree angle all wires can be discriminated in a 4 layer superlayer

Radiography process

- About a 10 width of the wire plane is illuminated with 300 kev xrays
  - precision fiducials are added near either end of the film to permit referencing from one frame to the next
  - grain size is about 2 microns

- The remaining width of the plane is surveyed with additional radiographs

- Film is developed

- Negative is examined on a precision microdensitometer
  - stage translation accuracy is about 5 micron
  - density of light passing through film is accurately measured
  - wire to wire and wire to ficudial centerline are measured to within 25 micron accuracy
  - frame to frame accuracies are calculated

Microdensitometer Scan

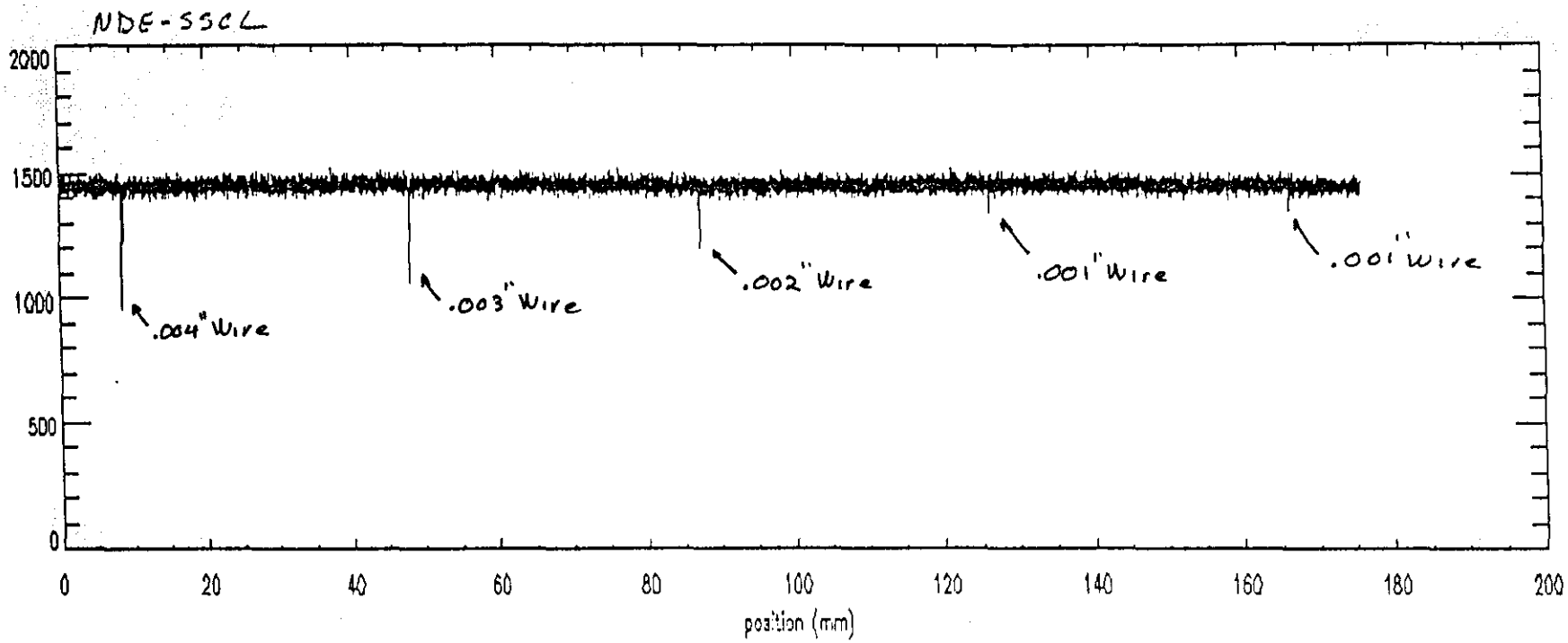

.004 to .003 wire (mm)

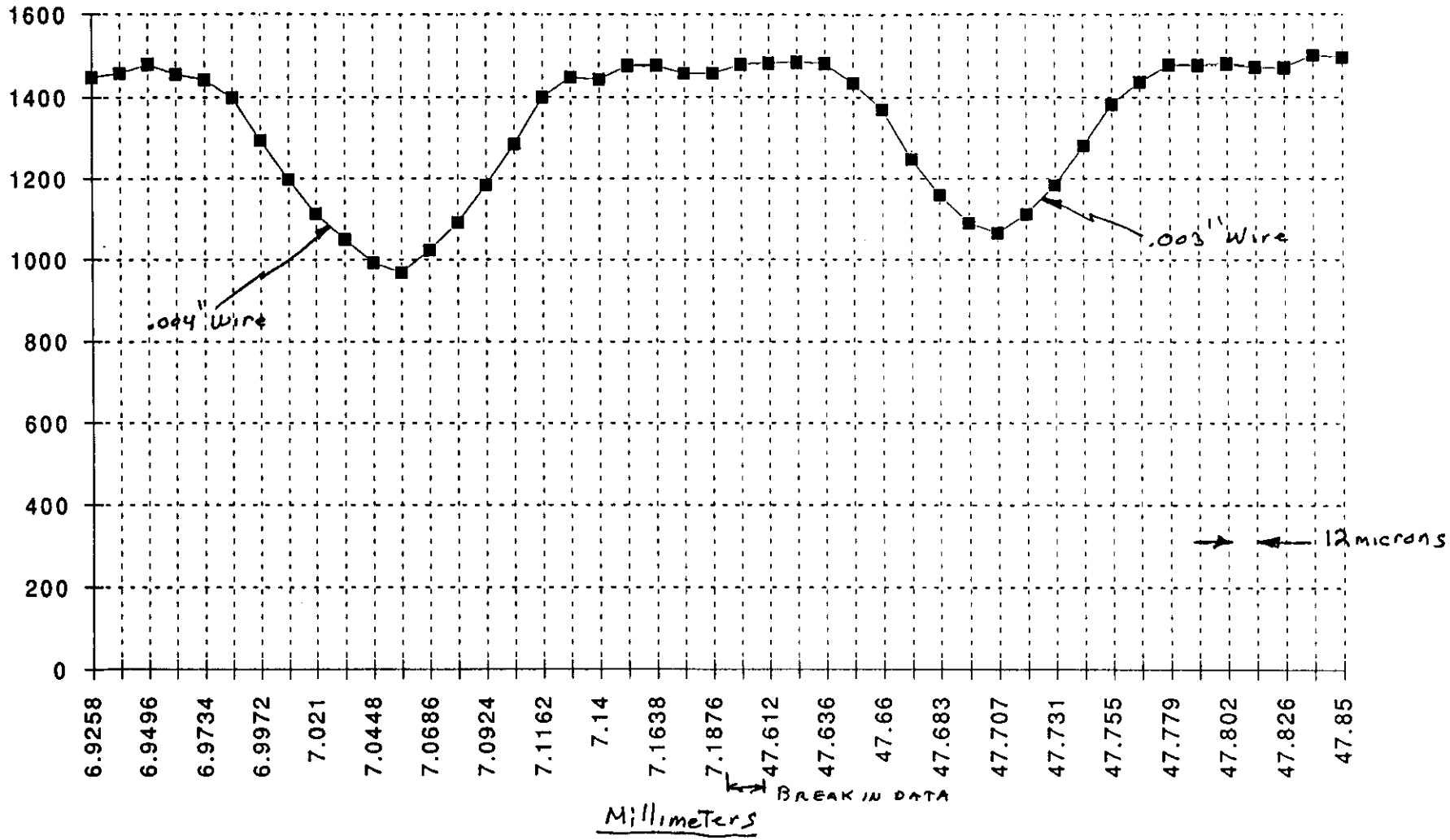

.004, .003, .002, .001 wires

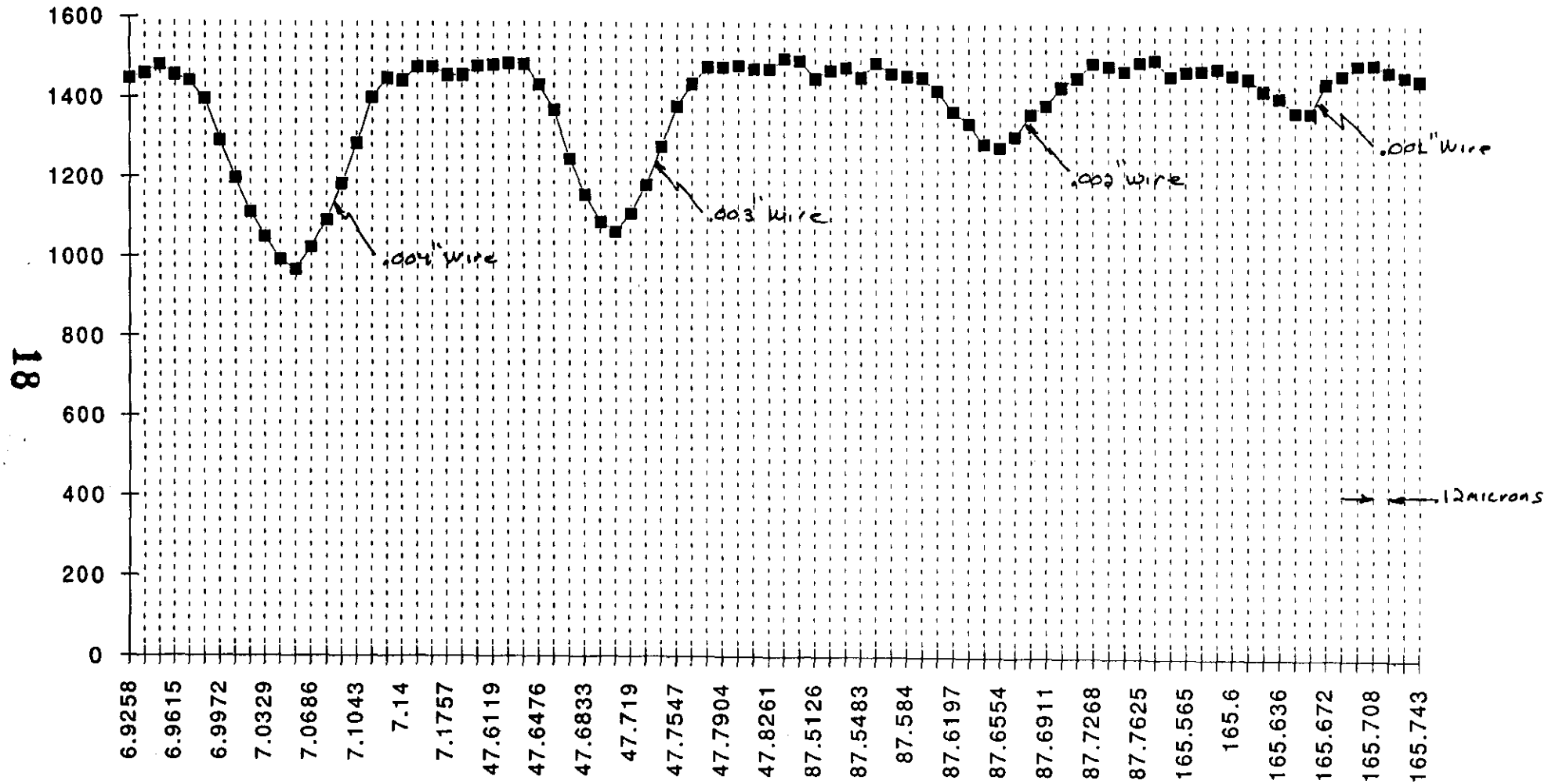

Radiography summary

- At LLNL a 300 kev, 4 ma xray source was used to expose a test array
  - 25, 50, 75 and 100 micron diameter tungsten wires
  - one exposure included an additional 3 mm of Al

- 50, 75 and 100 micron wires were easily discriminated
  - 25 micron wire was marginal

OK <10M

- Microdensitometer evaluation indicates centerline resolution less than the 25 micron requirement

- A more realistic prototype needs to be tested and parameters optimized
  - energy level
  -- film location (magnification)

Potting?

Laser options

- Multipoint laser alignment techniques appear to be feasible but very challenging
- Environmental effects, turbulence and vibration, will have to be managed
- A high quality laser source will be important in controlling diffraction
- Sensor technology requirements will be state-of-the-art

Laser beam size can be controlled with relay telescope

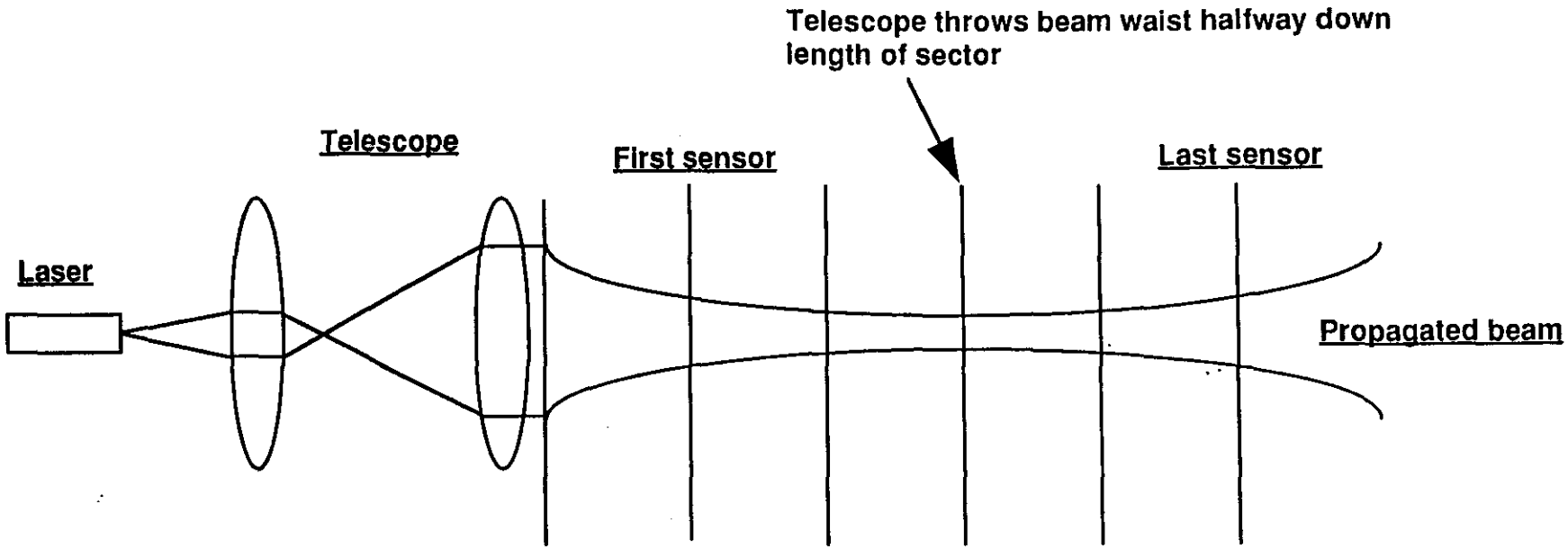

Distance from laser - m	0	3	6	9	12	15
Beam diameter - mm	4.1	3.2	2.5	2.2	2.5	3.2

Calculations were performed for a perfect Gaussian beam. A real beam with imperfect wavefront and optics and propagating in air with turbulence will have degraded performance

Laser beacon concept

Need concept drawing

Three beacons establish superlayer planes

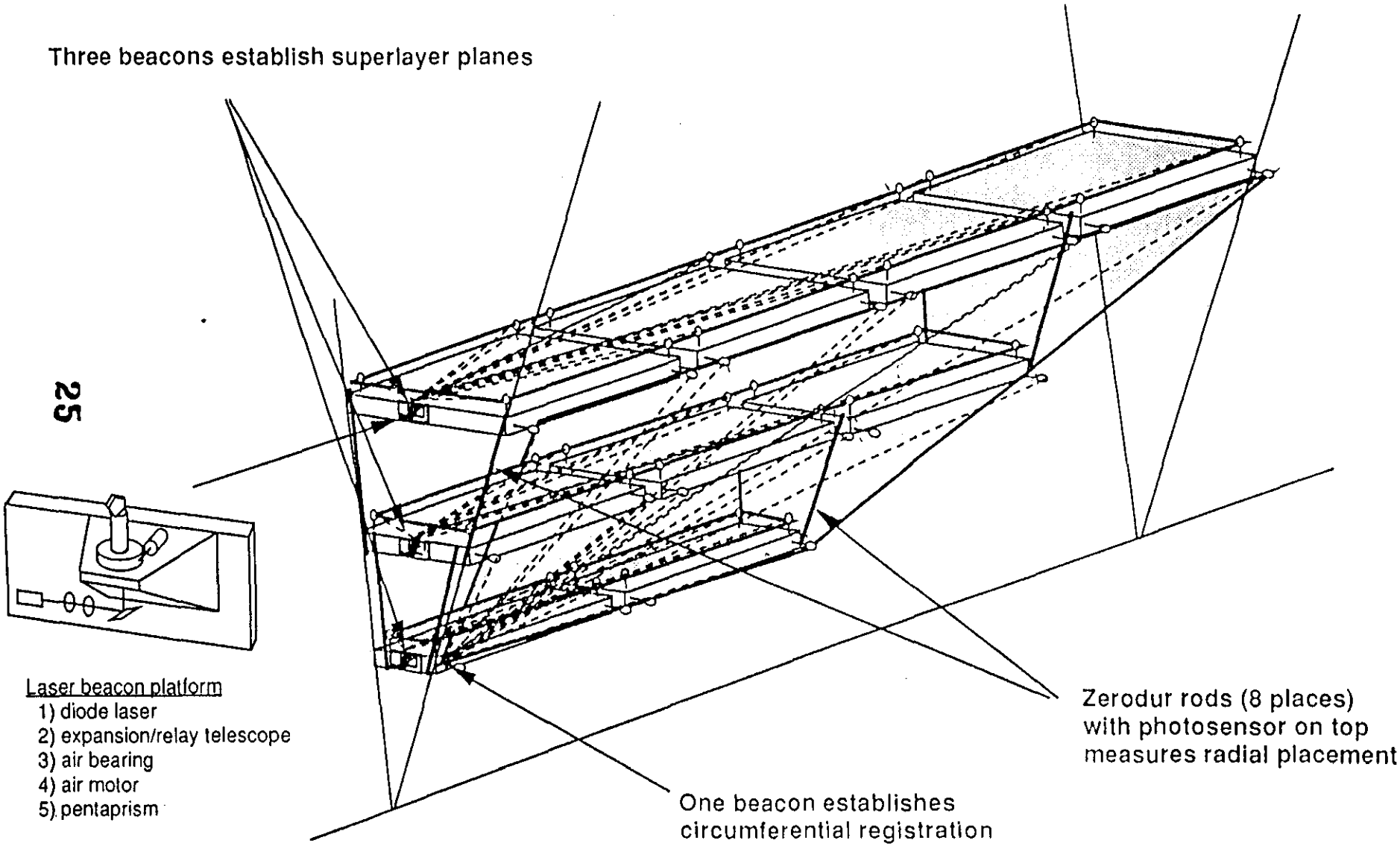

Laser splitter concept

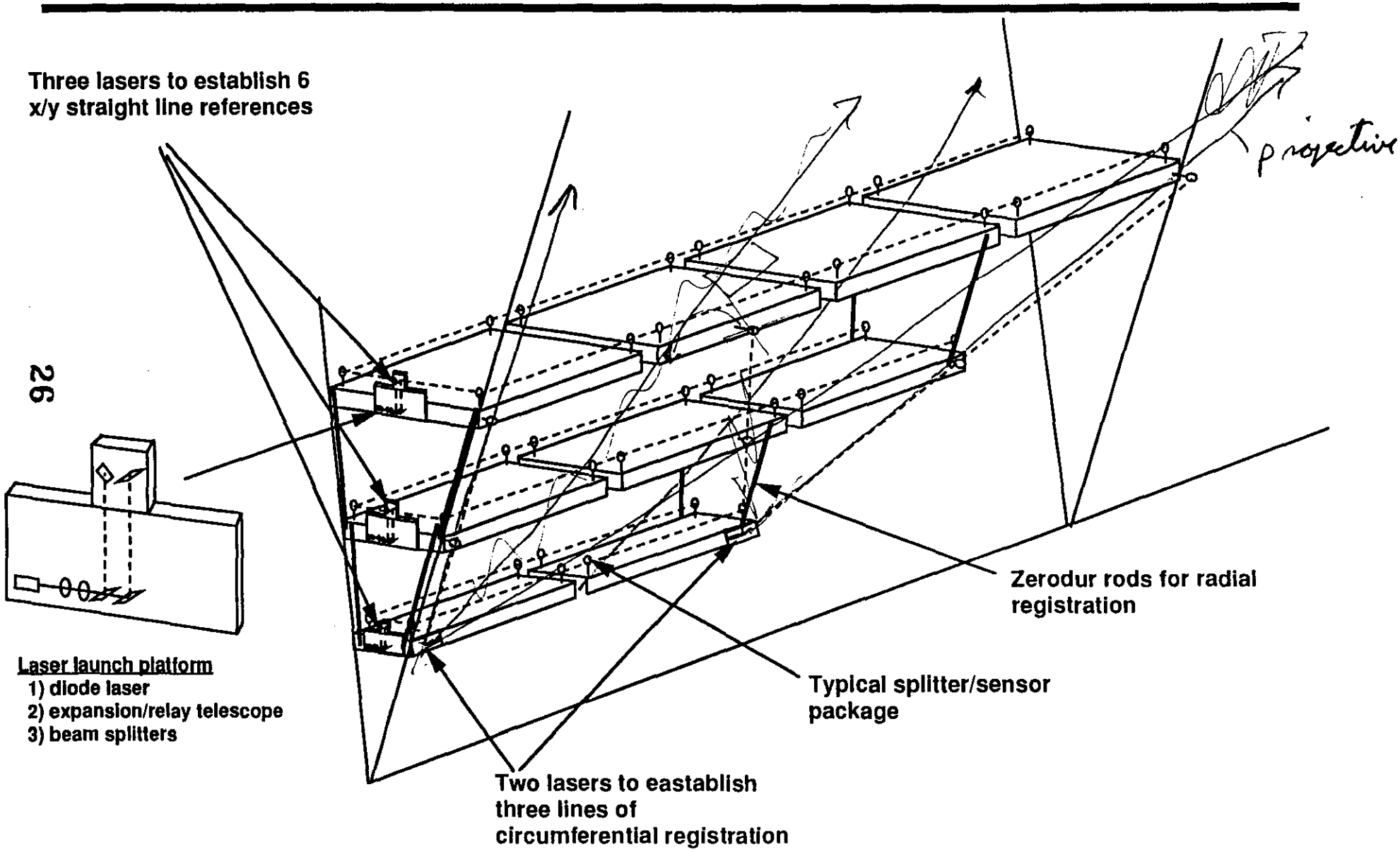

Splitter/sensor assembly

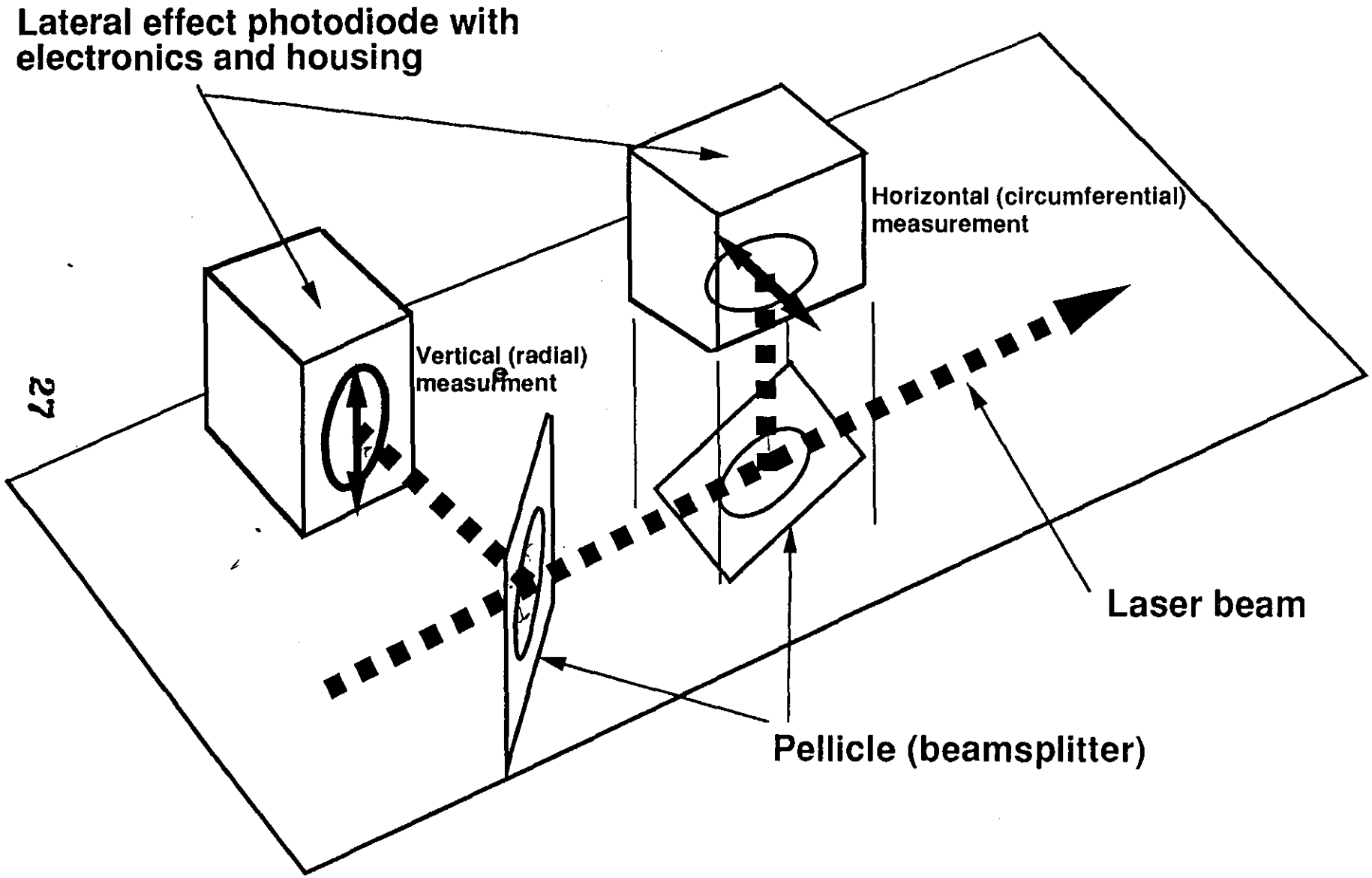

Laser option issues

- Air turbulence will cause beam steering and intensity fluctuations
  - at 15 meters beam oscillations is likely to be on the order of 100 microns
  - averaging will have to be implemented to reduce this error
  - could mount laser in midle of superlayer to reduce effect

- Diffraction must be controlled to keep beam size small and maintain good range
  - beam waist can be relayed (to center of chamber) to minimize effect
    - -- 3.2 mm beam will contract to about 2.2 mm in center of superlayer
  - telescope will be located next to laser

- Bearing which rotates laser beacon must have ultra high precision
  - use pentaprism to reduce sensitivity
  - use air bearing (wobble << 1 microradian)

- Sensor range and sensitivity must be optimized
  - lateral effect photodiode has 20 micron resolution
  - range is approximately 2 mm

The Stretched Wire Alignment Technique hardware is simple

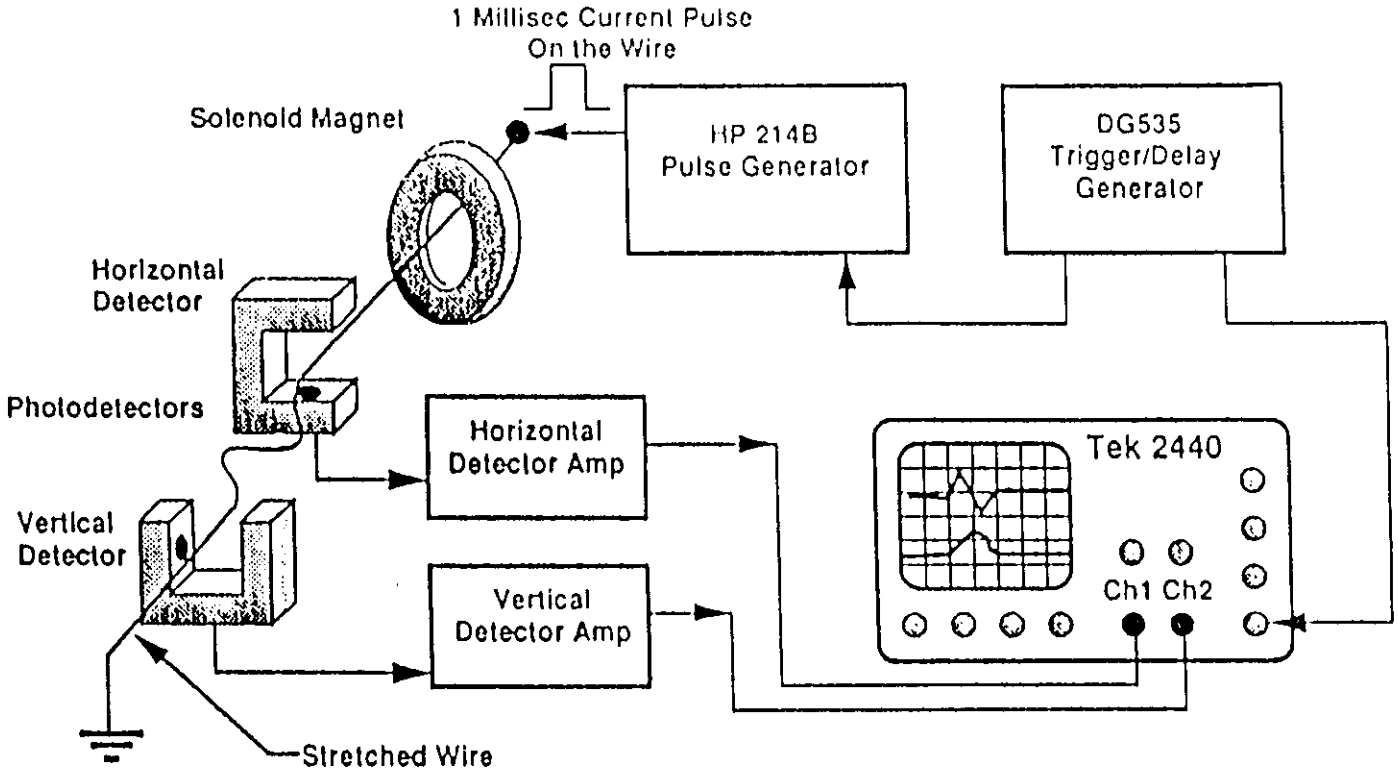

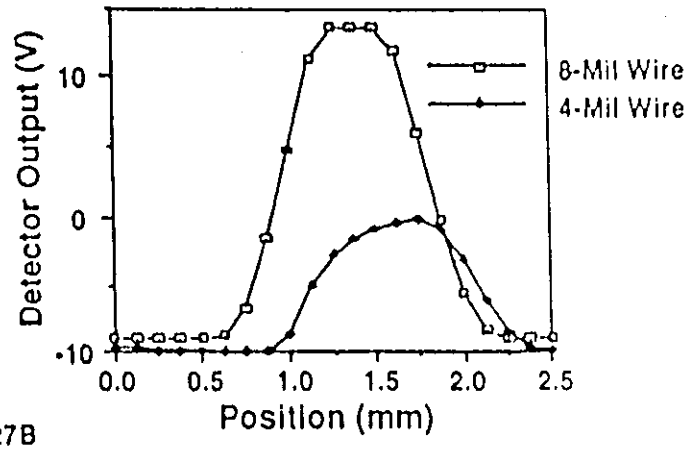

The photodetectors used to measure wire deflections are very sensitive---the output for a 4-mil wire is greater than 20 millivolts per micron of motion!

40-D-0790-0227B

SWAT technique applied to GEM

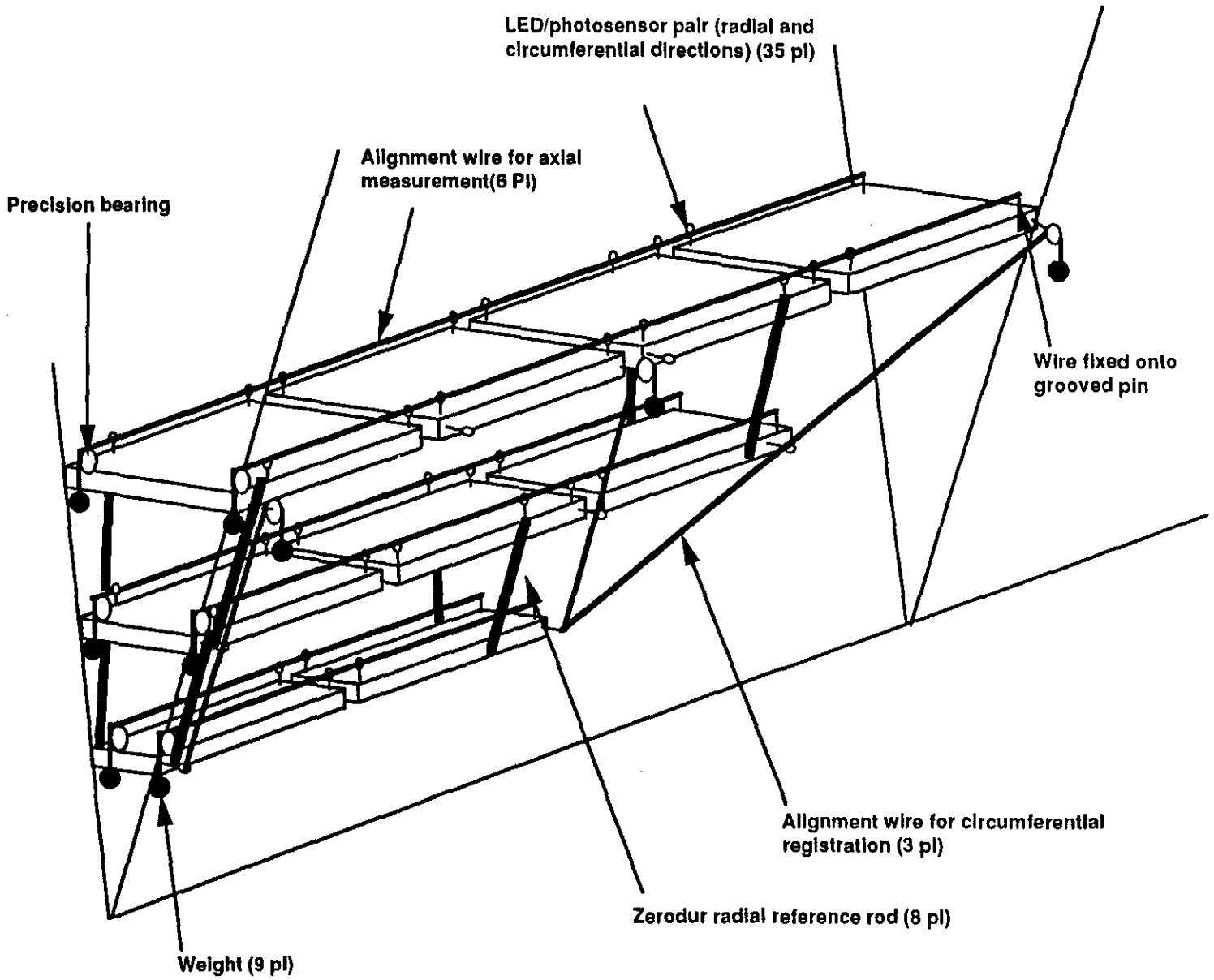

SWAT characteristics

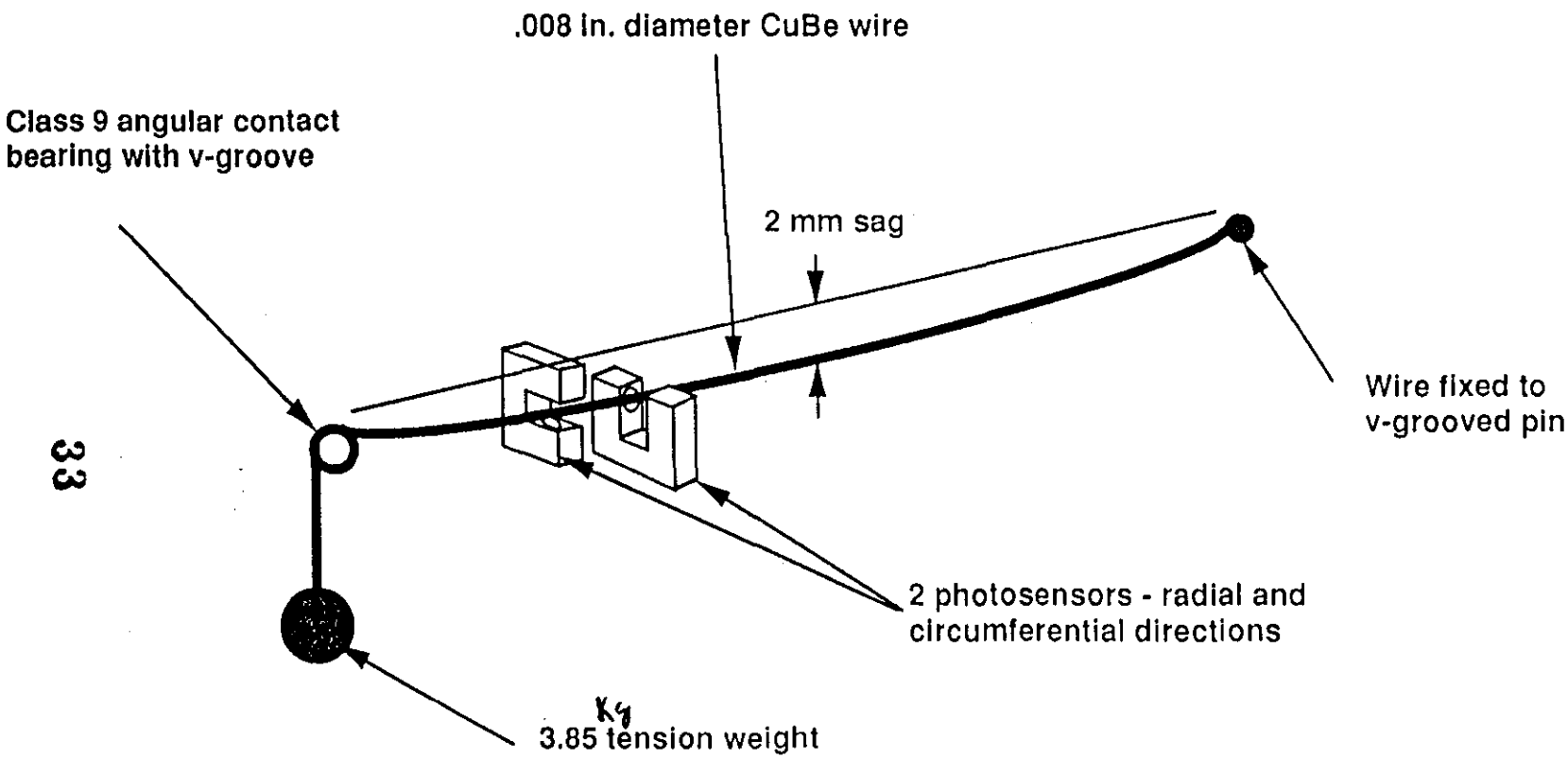

CuBe linear density = 2.734 x 10^(-4) Kg/m
Resonant frequency = 12.6 Hz
Wire stressed to 90% of ultimate tensile strength
Resolution of photosensor= 1 micron
Range of photosensor = 0.25 mm

SWAT error analysis

Sag predictability (1 / 1000) *	2
Detector resolution	1
Fiducialization	5
Temperature sensitivity @ 5 deg F*	0.1
Vibration	?
RSS total	5.5 + ?

Units= microns
* based on a 2 mm wire sag

oxidation

SWAT technical issues

- Vibration sensitivity is uncertain
  - resonant frequency is uncomfortably low (13 Hz)
  - wire may have to be tubed to minimize turbulence effects

- Range of detectors must be increased
  - comprehensive search should be initiated
    - -- photoresistors
    - -- phototransisitors

VEVAS

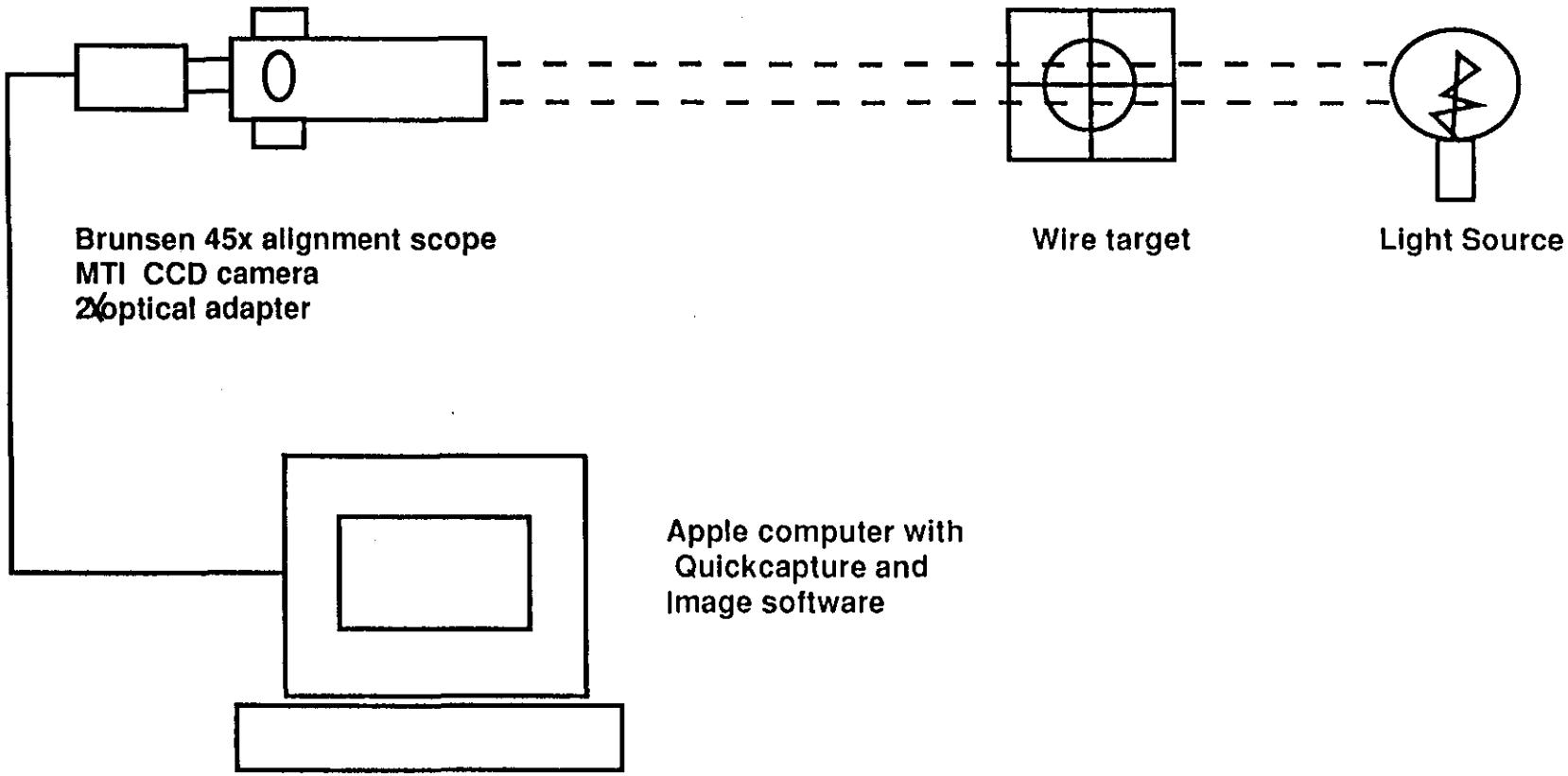
Brunsen 45x alignment scope
MTI CCD camera
2X optical adapter
Wire target
Light Source
Apple computer with
Quickcapture and
Image software

VEVAS test

- .020 inch wire target was placed 15 meters from alignment scope
- Images were captured on a Macintosh and displayed with Quickcapture
- Turbulence moved beam anywhere from 25 to 125 microns depending on time of day and other external conditions
- Wire could be repeatedly placed to the same position within 100 microns by and untrained person - 50 microns by an experienced technician
- Image processing and averaging offers potential for improvement but 25 micron accuracy has not yet been demonstrated at 15 m

EXAMPLE IMAGES CCD CAMERA

ENGINEER: RICHARD SAWICKI
PHYSICIST:
TECHNICIAN: DICK ERNST
DATE: 6/10/92

TARGET POS. ELE. 45 FT.
TARGET POS. ELE. 45 FT.
TARGET POS. ELE. 45 FT.
TARGET POS. ELE. 20 FT.

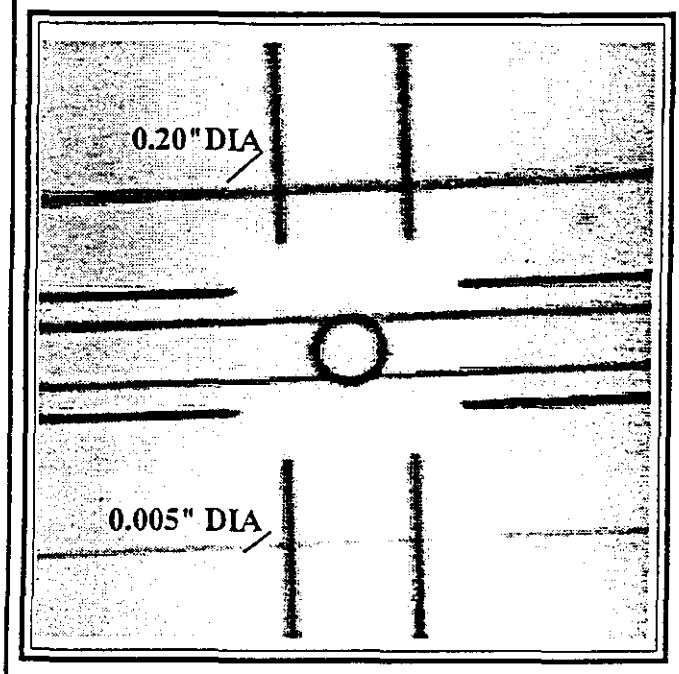

TARGET POS. 45FT ..005",.010", .015",. 020" WIRE DIA.

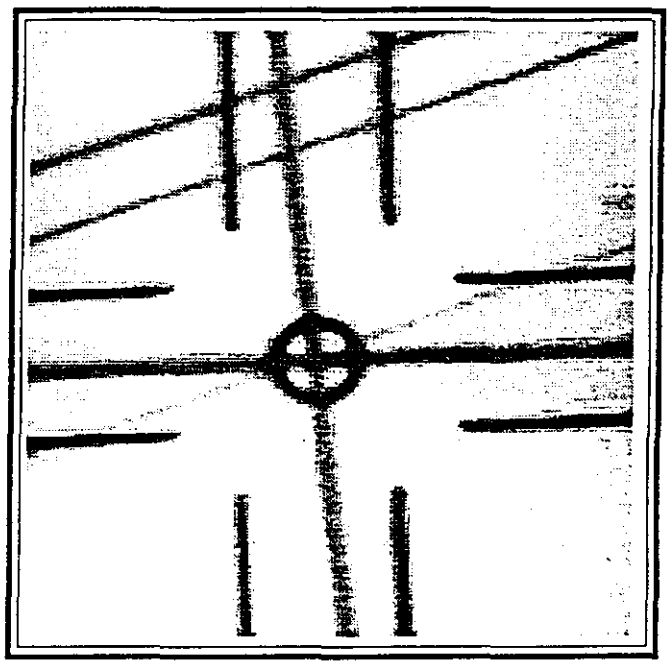

TARGET POS. 45FT. .020" CENTER LINE .005" CENTER LINE .010" AND .015" DIA.

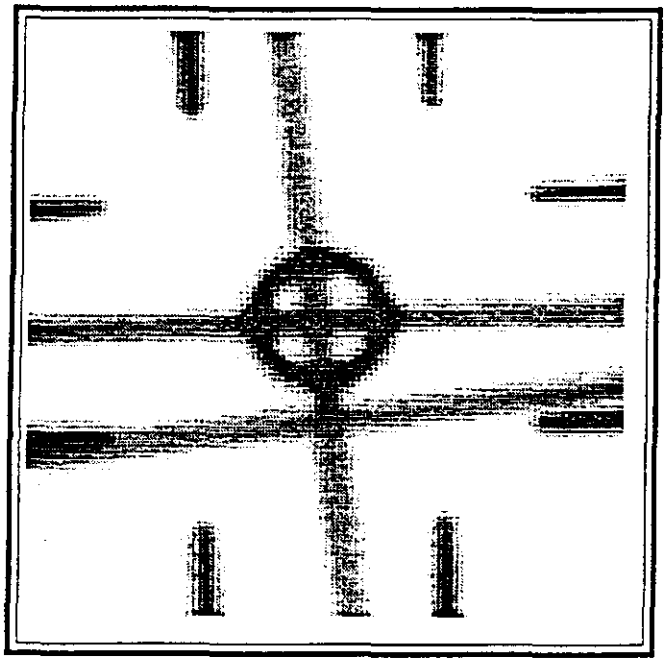

TARGET POS. 45FT .020" CENTER LINE WIRE WITH A .020" DIA OFF SET WIRE

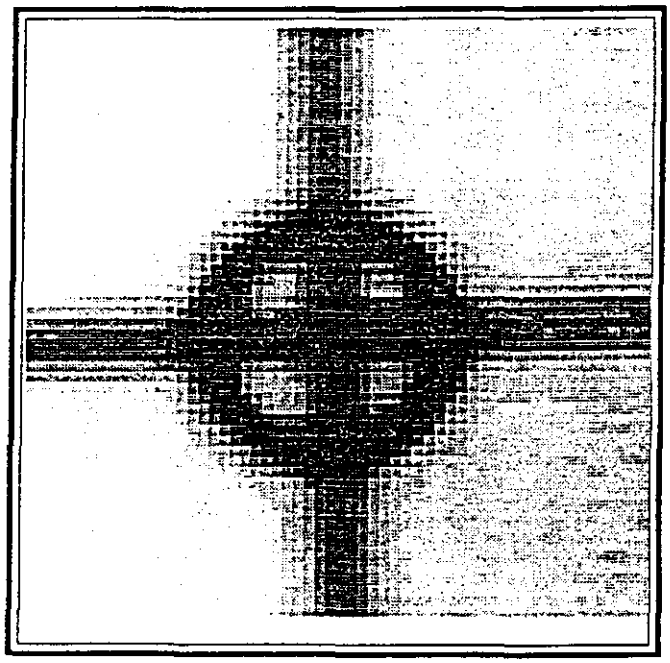

TARGET POS. 20FT. .010" DIA. CENTER LINE WIRE

SUPER COLLIDER WIRE TEST 45 FT. REPORT1

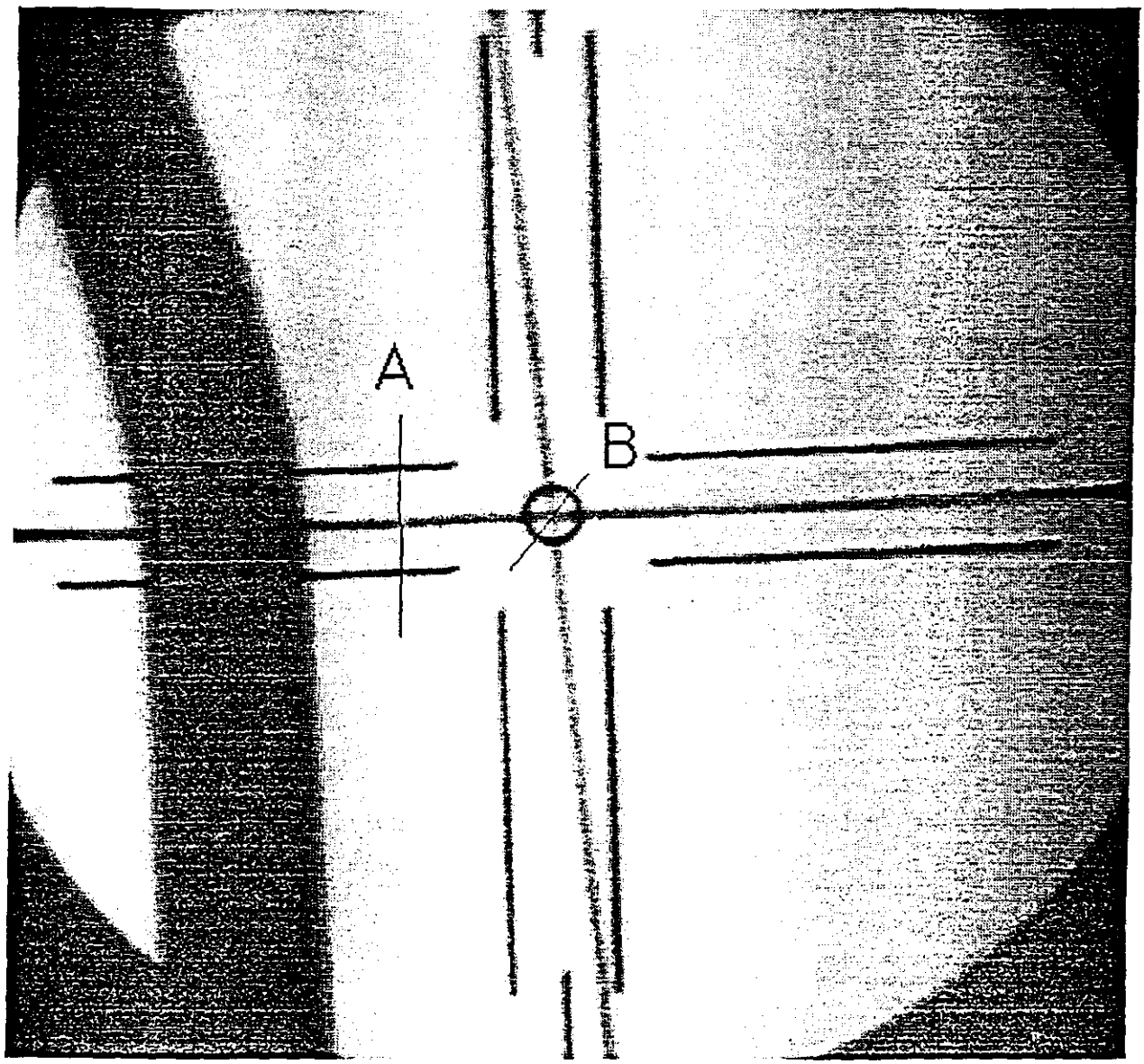

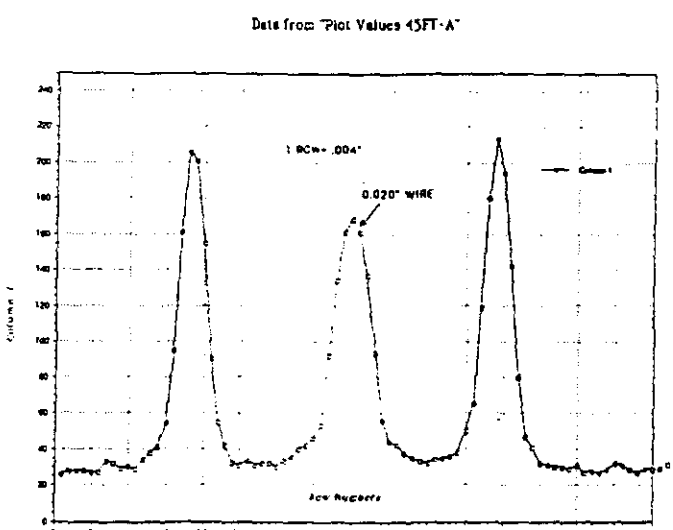

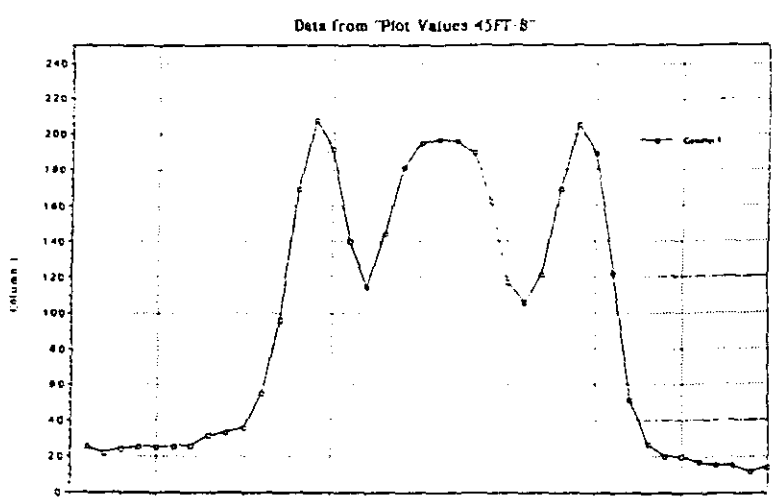

SUPER COLLIDER WIRE TEST 45 FT. REPORT 1

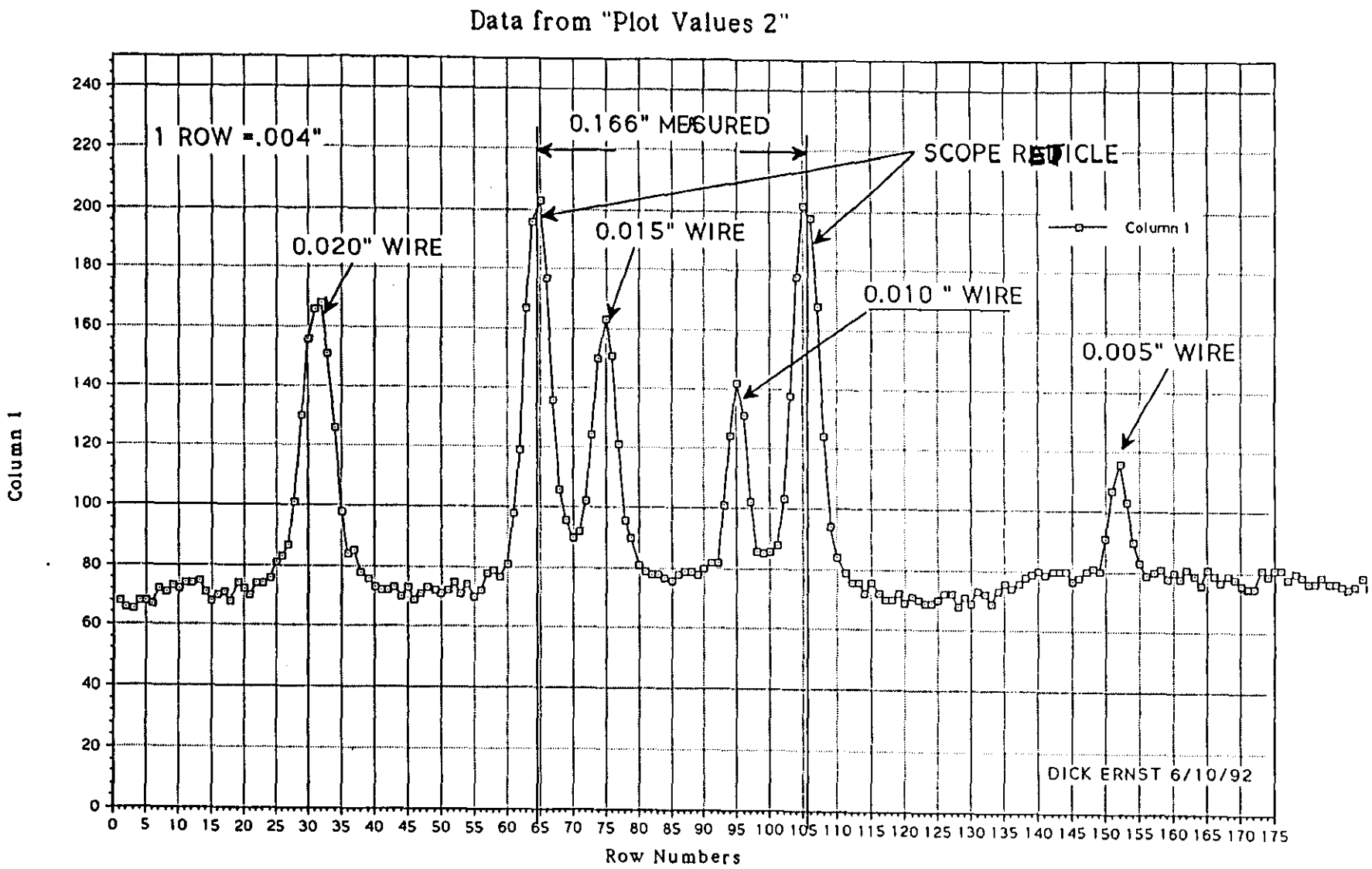

Pg 2A

VEVAS summary

- Measurement accuracy in the 75 to 100 micron range is realistic with currently available and demonstrated hardware

- 25 micron accuracy will require further development
  - higher magnification
  - computer processing
  - light enhancement

- Could become a low cost technique for verifying pre-alignment during initial assembly and recalibration later on
  - not practical for real time measurement

Measurement from muon sector to BP monitor

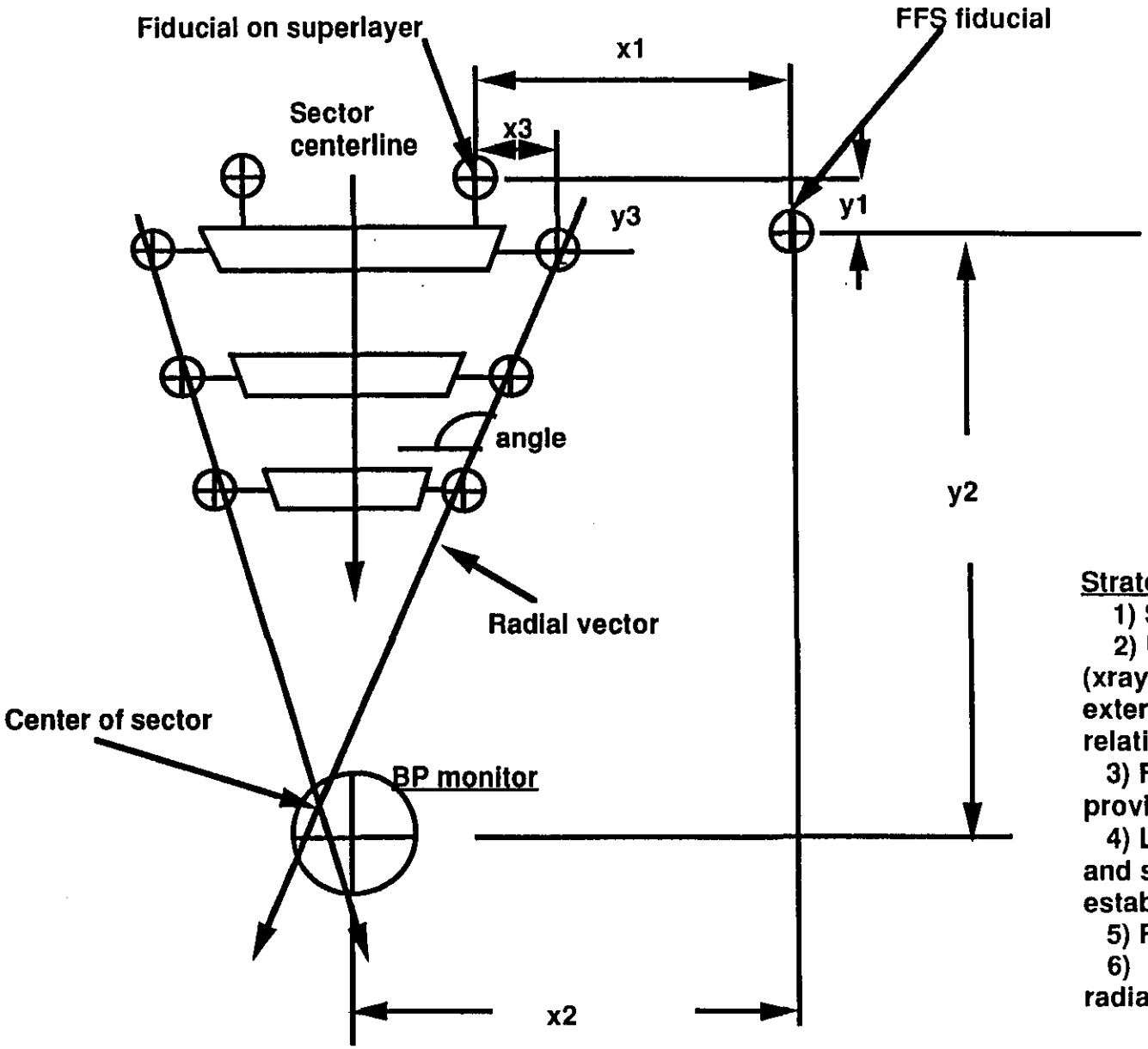

Strategy

1) Survey x2,y2
2) Use alignment scope (xray technique) to measure external fiducial location relative to superlayer
3) Fiducial placement provides x3,y3
4) Laser angular placement and superlayer misalignment establishes radial vector
5) Repeat for left side
6) Calculate intersection of radial vectors

Muon system to BP monitor measurement hardware

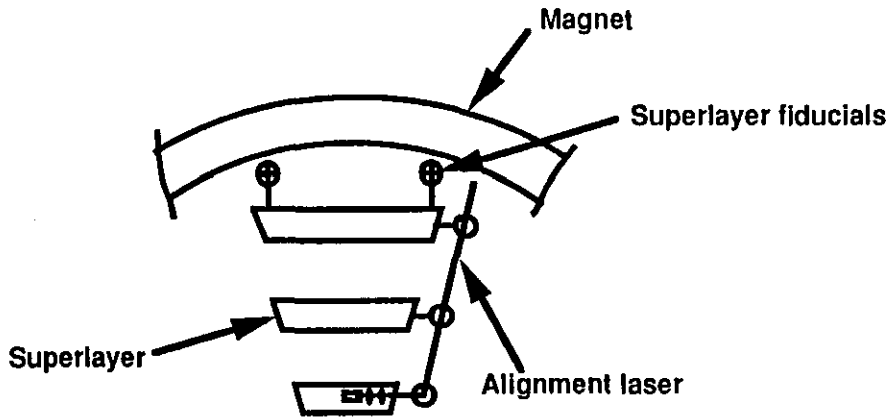

End View

must work in Magnet field

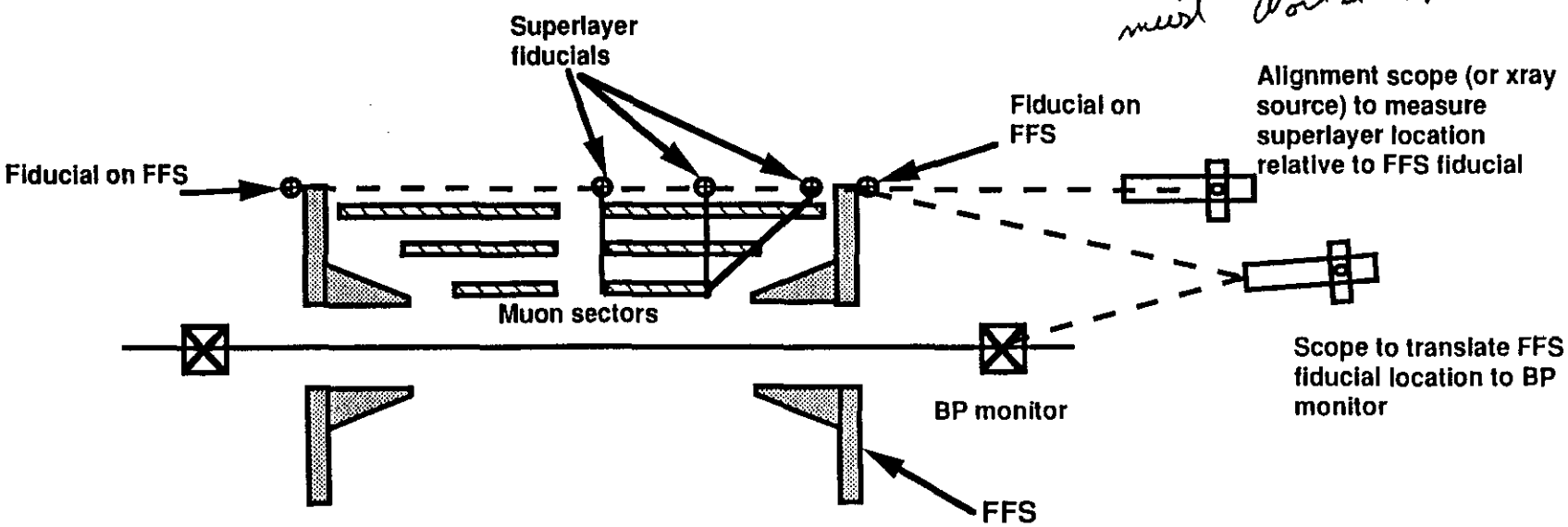

Side View

Muon System Straight Line Monitor Options

				Cost		Design Impact								
	Range	Resolution	Accuracy	(barrel only)	Experience Base	Chamber	Structure	Installation	Thermal sensitivity	Reliability	Stability (cal. freq)	Calibration difficulty	Development effort	Multipoint capability
Technique	mm	mm	mm	K$	prev./sim./devel.	none/minimal/sig.	none/minimal/sig.	none/minimal/sig.	delta mm/degree C	year/month/day	days	easy/medium/hard	K$	easy/develop/none)
LED/Lens														
SWAT	0.25	0.001	0.016 (w/.01 for vib)	1080	similar	none	minimal	minimal	<.001	year	months	easy	97	easy
Laser Beacon	2	0.02	7	2155 (beacon) 1512(splitter)	develop	none	minimal	minimal	unknown	months	weeks	medium	219	easy
UV laser														
Xray	0.7 (More w/film)	0.01	0.024	105 (one LOS)	proven(maybe)	none	minimal	minimal	negligible	not continuously operated	NA	NA	177	easy

Comments: all entries should have backup data to support claims

Experience base: indicate whether experience is based on
1) deployed hardware that has been verified to meet all requirements (proven)
2) similar hardware whose capabilities are being extrapolated to meet the requirements (similar)
3) hardware that requires development to verify compliance with requirments (develop)

Design impact: indicate level of design impact on the muon chamber, the support structure and installation process
1) no impact (none)
2) small modifications are required with minimal impact (minimal)
3) significant modifications are required that necessitates engineering evaluation (significant)

Reliability: Estimate the period of time that the system can be expected to operate without failure or maintenance
1) 1 year
2) 1 month
3) 1 day

Calibration difficulty: indicate effort required to calibrate system
1) can be quickly performed before and after daily runs (easy)
2) requires evaluation process that potentially impacts run schedule (medium)
3) extensive procedure which prohibits daily runs (hard)

Development effort: estimate effort required for full scale demonstration

Multipoint capability: indicate effort required to extend technique to multipoint(>3) capability
1) technique applies equally well to multipoint systems (easy)
2) some development is required (develop)
3) technique is not applicable to multipoint systems (none)

Summary

- Each option has the potential of satisfying the requirements but all will require development and test verification

- None of the proposed options have been demonstrated by test to have the required measurement accuracy at a distance of 15 m
  - promising but inconclusive data is available at 21 m distance for xray technique

- The xray technique is attractive because of its immunity to air effects but is impractical as a real time diagnostic for all superlayers because of its space requirements and high cost
  - may be the most accurate technique for verifying initial alignment and for recalibration

- The laser techniques are viable options for continuous monitoring but will have to contend with potentially significant air turbulence effects and sensor resolution limitations
  - resolution of 25 microns is very challenging

- The stretched wire technique is a simple, low cost alternative but will require meticulous implementation and is subject to vibration problems
  - resolution capability is good but range is low

- VEVAS is an inexpensive technique that can be used for GEM alignment in general but is unmanageable for real time muon alignment monitoring
  - chances of achieving 25 micron accuracy is least likely for this technique

- BP monitor to muon system position measurement appears feasible

A laboratory experiment should be setup to test the viability of these different techniques