GEM TN-93-336

GEM Muon System Alignment Meetings - SSCL

December 18, 1992 and January 6, 1993

Abstract:

Presentations of the GEM Muon System Alignment Meetings held at the SSC Laboratory on December 18, 1992 and January 6, 1993.

Integrated Alignment System Test Concept

Rick Sawicki

Integrated alignment system test objectives

- The primary objective of the integrated alignment system test is to confirm the performance capability of a Projective Alignment System in a prototypical environment
  - measure superlayer-to-superlayer alignment with better than 25 micron accuracy

- Demonstrate integrated system performance
  - hardware
  - software
  - data acquisition and analysis

- Characterize system sensitivity to variable environmental conditions
  - varying temperatures
  - vibration
  - chamber rigid body motion
  - chamber flexible modes of deformation
  - tower structure deformation

- Optimize system design
  - software
  - alignment procedures
  - support and adjustment mechanisms

Integrated alignment system test concept

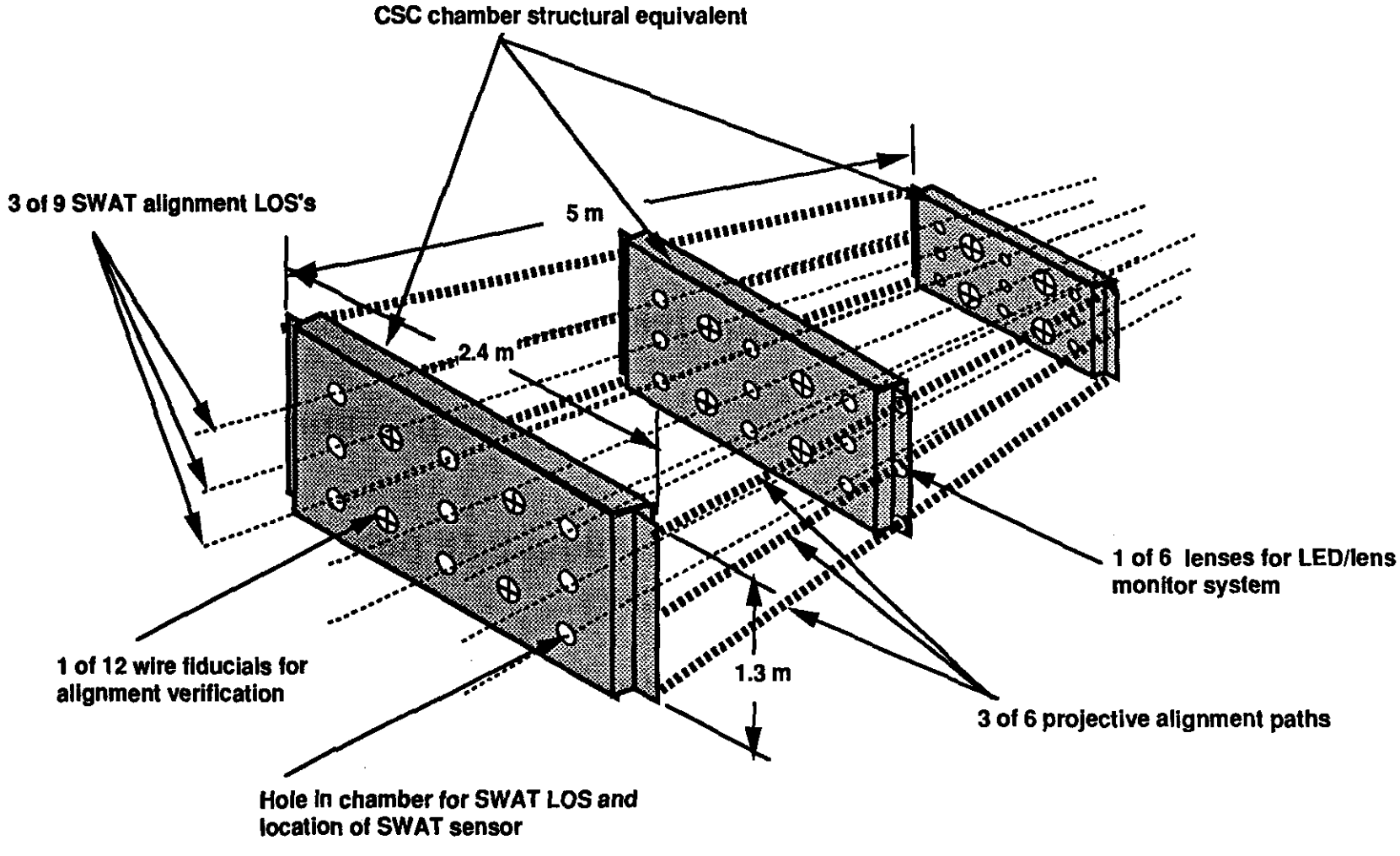

Test chamber construction

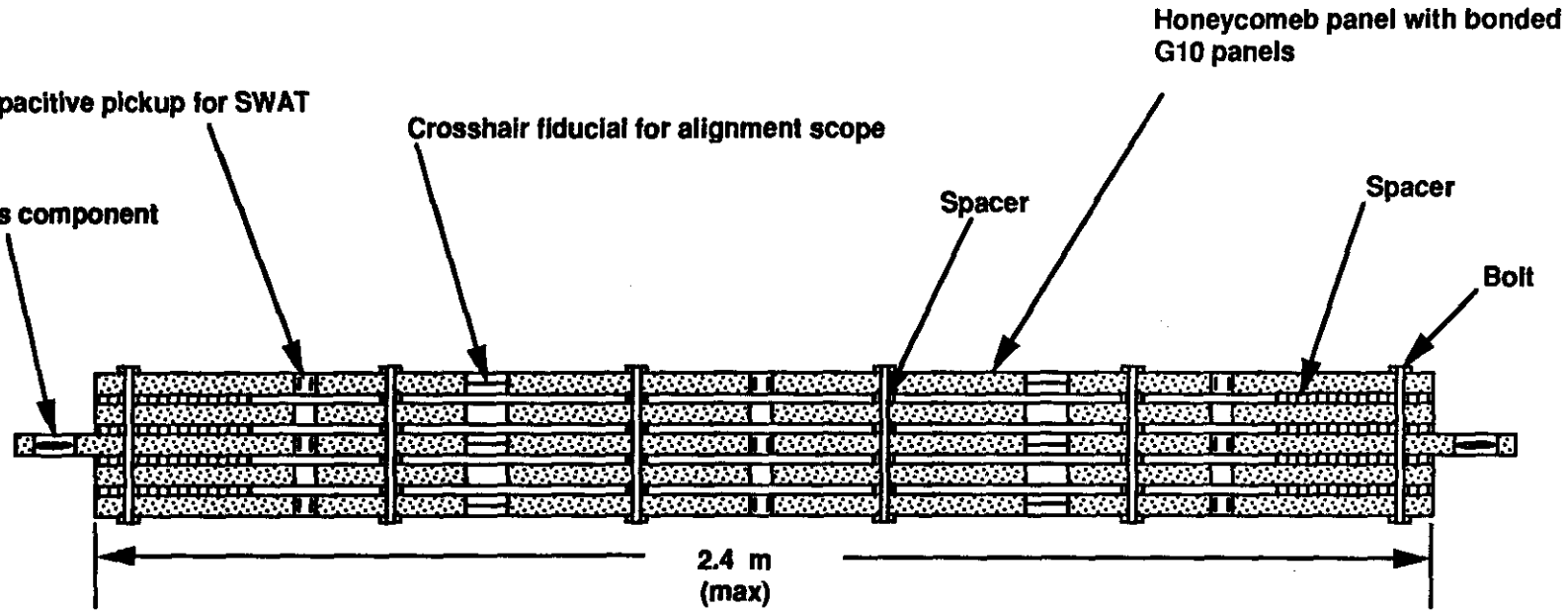

Not drawn to scale
Panel construction requires no precision
- off the shelf G10 panel are glued to imprecise honeycomb sections
Spacers require no precision tolerances

The concept is to mimic the structural behavior of a CSC chamber but at low cost without the precision required of the actual production unit

Integrated alignment system test setup

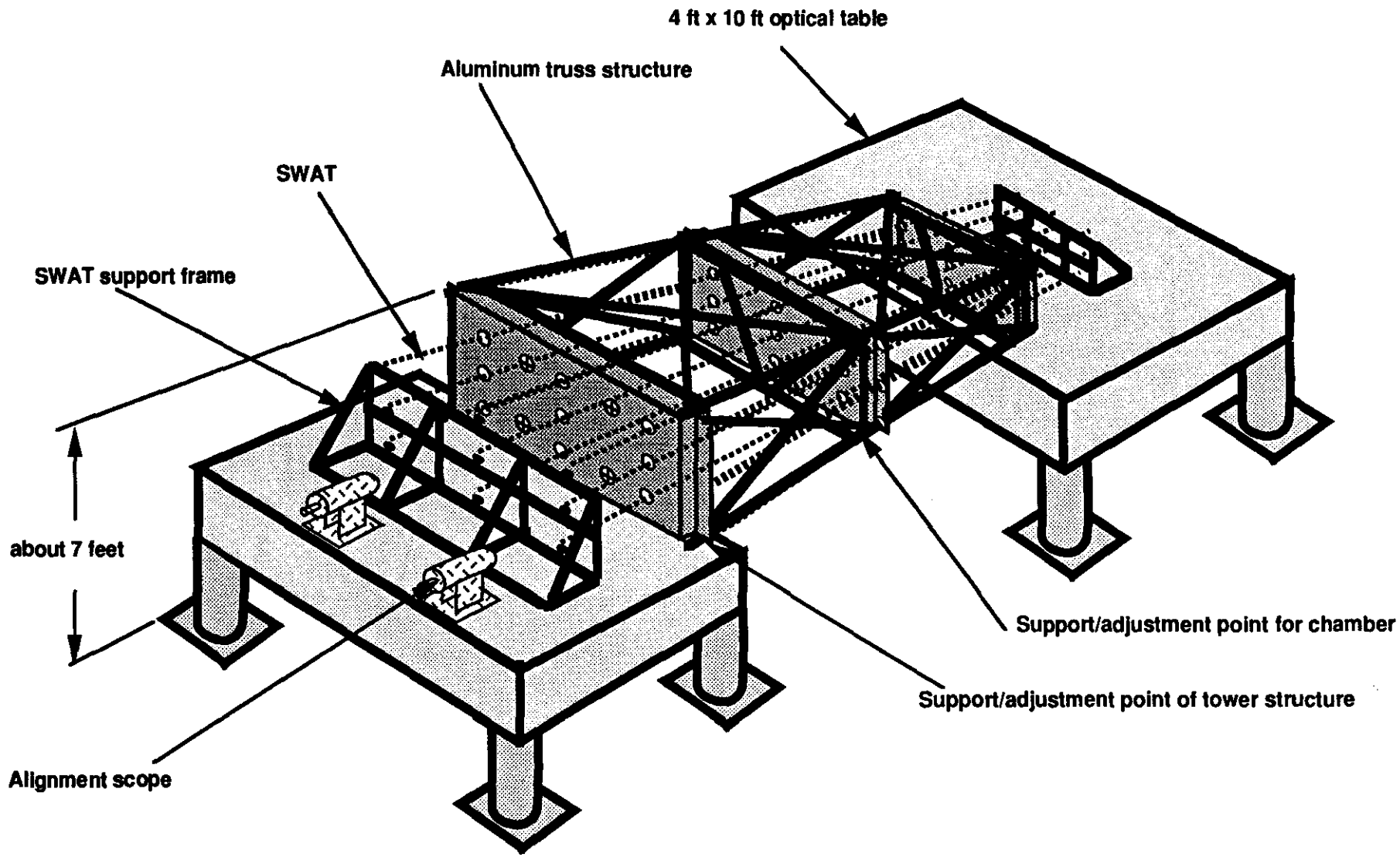

Muon Chambers Alignment for the CMS Detector at LHC

Ettore Rosso

MUON CHAMBERS ALIGNMENT

Working team

Jean-Christophe GAYDE / AT-SU

Alain HERVE / PPE-L3D

Christian LASSEUR / AT-SU

Rob LOOS / PPE-TA2 - B 16 1st floor 8.57 x 2927
RLOOS @ CERNVM

Ernst RADERMACHER / PPE-CMS

Ettore ROSSO / PPE-TA2 - B16 x 5853 beep 5050

Franz KLUMB / AT-SU

MUON CHAMBERS ALIGNMENT

Basic Philosophy

In order to reach the final accuracy the following conditions must be fulfilled:

1) The different muon station modules must be aligned at the beginning and their position continuously monitored.

2) The alignment of the overall muon detector with respect to the Central Tracker must be performed at the beginning and continuously monitored.

3) The final alignment must be obtained using high p_t muons from Z^0 decays.

4) The alignment accuracy between the inner tracking and the muon detector must be such that:

– $\sigma_{r\phi} < 100\ \mu m$ in the bending plane and transverse to the radial direction.

- $\sigma_r < 1$ mm in the bending plane and in the radial direction.

- $\sigma_z < 1$ mm along the beam direction.

MUON CHAMBERS ALIGNMENT

Basic assumption

a) Each chamber is considered totally rigid and temperature stable (all its points move together with the reference marks).

b) The Central Tracker is considered as a stiff object (in fact its internal alignment system is meant to measure the relative position of the wheels within 20μm).

c) 6 transparent windows allow light beams to connect optically Central Tracker and muon chambers throughout the ring in the mid plane of the coil (by design totally rigid).

d) 3 transparent channels throughout the forward modules allow the alignment of the end caps with respect to the barrel region (with serious problems to align modules non adjacent to the optical channels).

MUON CHAMBERS ALIGNMENT

Techniques

- LASER beams (direct or carried by mono-mode quartz fibres) combined with optical systems and quadrant photo diodes (or CCD) measure bi-directional displacements of several elements with respect to a straight line.

- Conductive wires associated to capacitive bi-directional sensors for the same purpose.

- RASNIK systems precisely align in 2 directions groups of 3 elements.

- Clinometers provide the direct measurement of rotations of individual components.

- Photogrammetry technique provides very accurate (100 to 200 μm) three dimensional survey of the full detector.

- CCD cameras recently developed could approach similar performances.

- Proximity gauges, micrometers,...

NB. a) All the techniques need specific R&D work to be adapted to the needs of the experiment.

b) The choice of techniques and materials must take into serious account the radiation damages caused by the LHC environment especially for the alignment of the components placed at small radius.

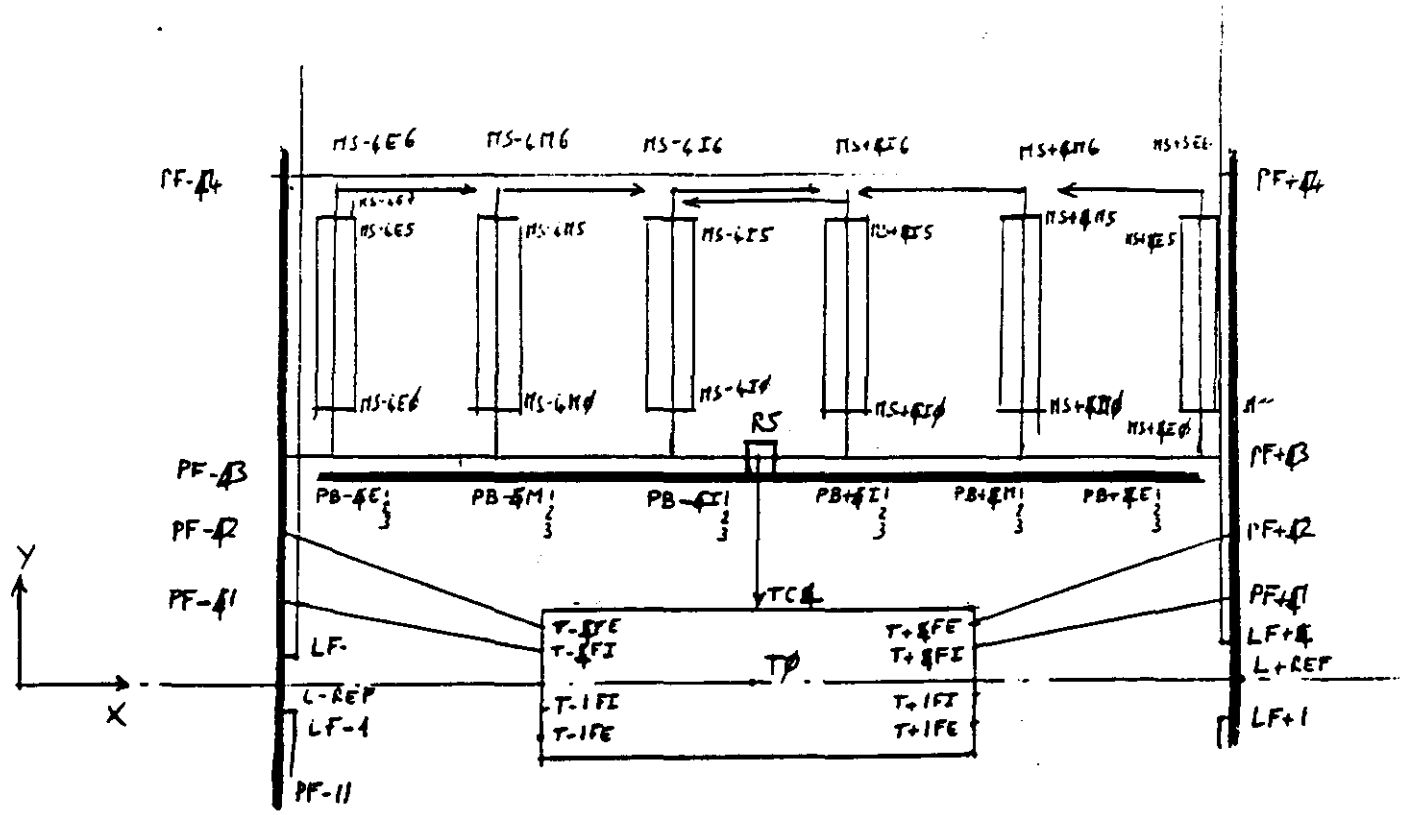

T : TRACKER

MS : Muons Barrel

ES : Muons Forward

R : Ring référence

P : Prisme

PB : Prisme Barrel

PF : Prisme Forward

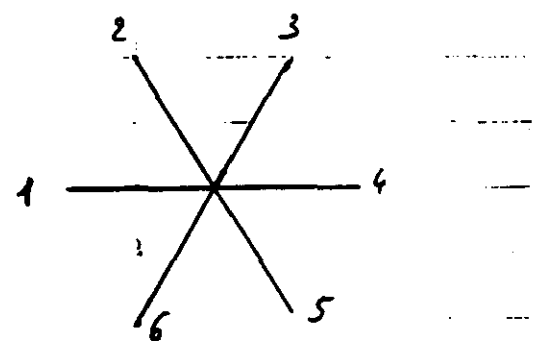

Nom : (T - 4 F E)

- E : Exterieur
- F : Forward
- 4 : Secteur 4
- - : X négatif
- T : Tracker

Décembre 1992

CMS

RESULTATS D'UNE SIMULATION AVEC :

Erreur angulaire accidentelle à chaque traversée d'un élément : 3" sexa.

Erreur de mesure de la position radiale d'un LASER : 50 μm

NOM	σZ (μm)	σR (μm)	σφ (μm)	
T0	30	60	30	Centre TRACKER
TC1	20	60	30	Périphérie TRACKER
T+1FE	30	80	30	" "
T+1FI	20	80	30	" "
MS+1E0	40	110	70	Tube MUONS intérieur
MS+1E5	100	110	70	" " extérieur
MS+1E6	100	110	70	" " "
MS+1E7	100	110	90	" " "

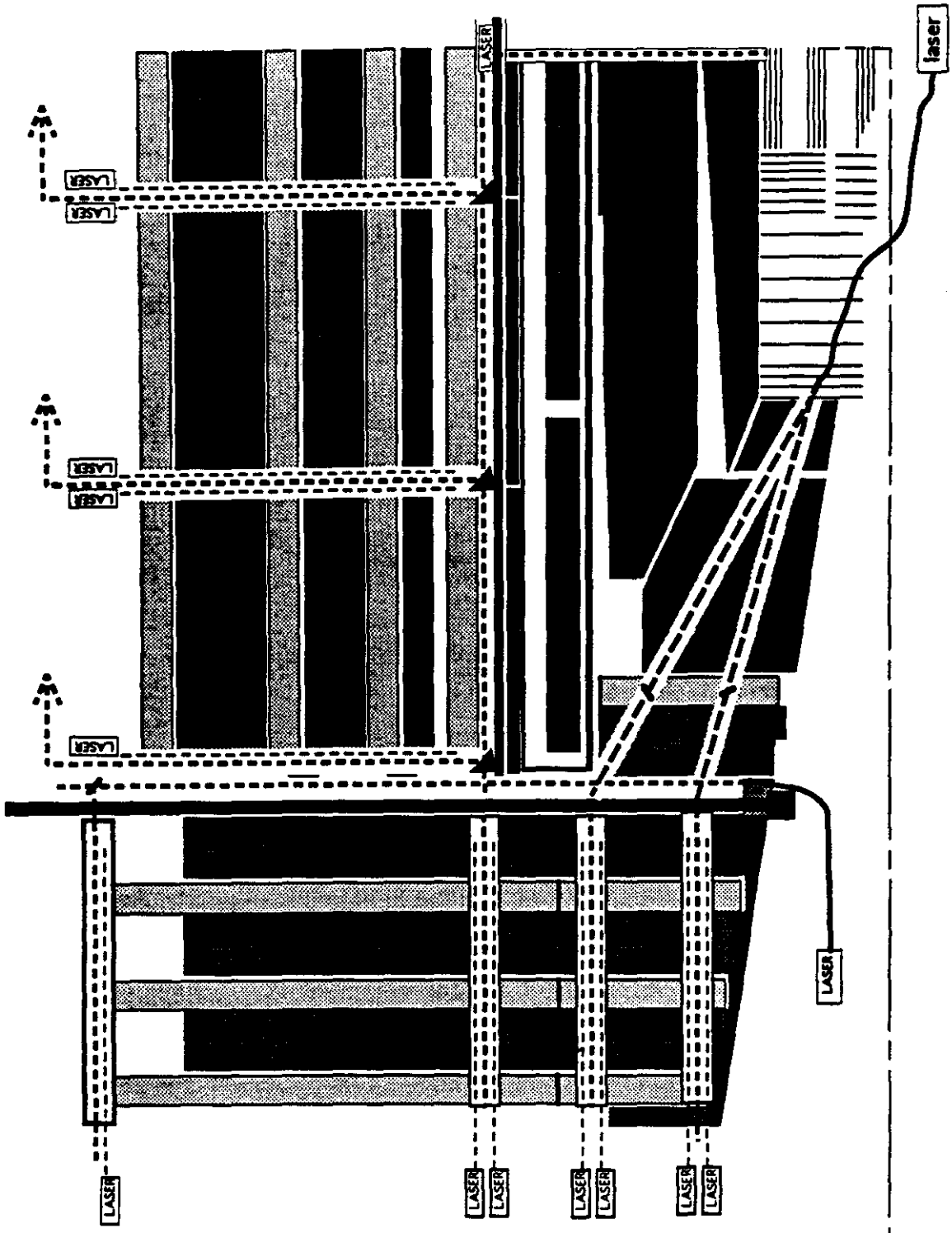
LASER
LASER
LASER
LASER
LASER
LASER
LASER
LASER
LASER
LASER
LASER
LASER
LASER
laser

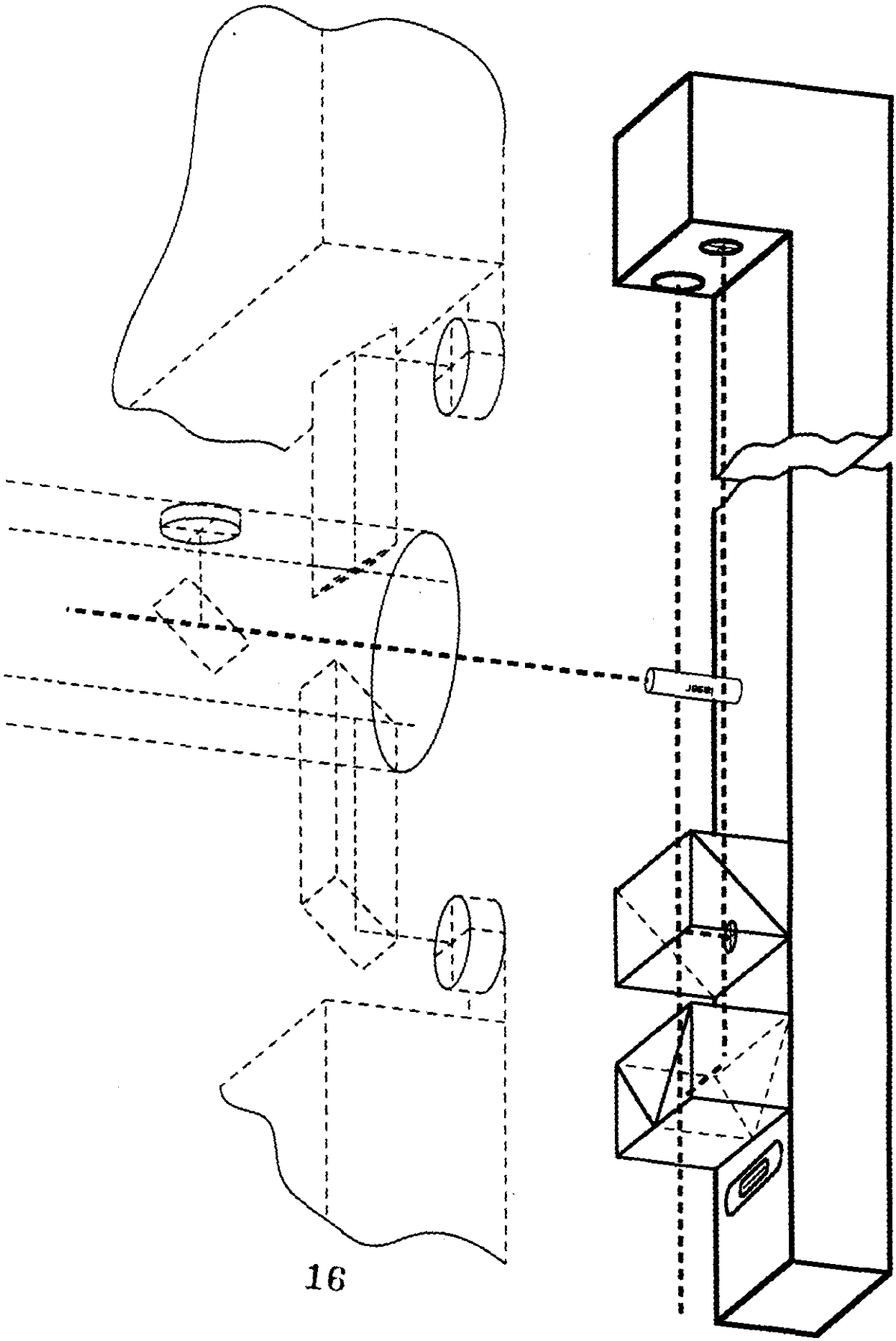

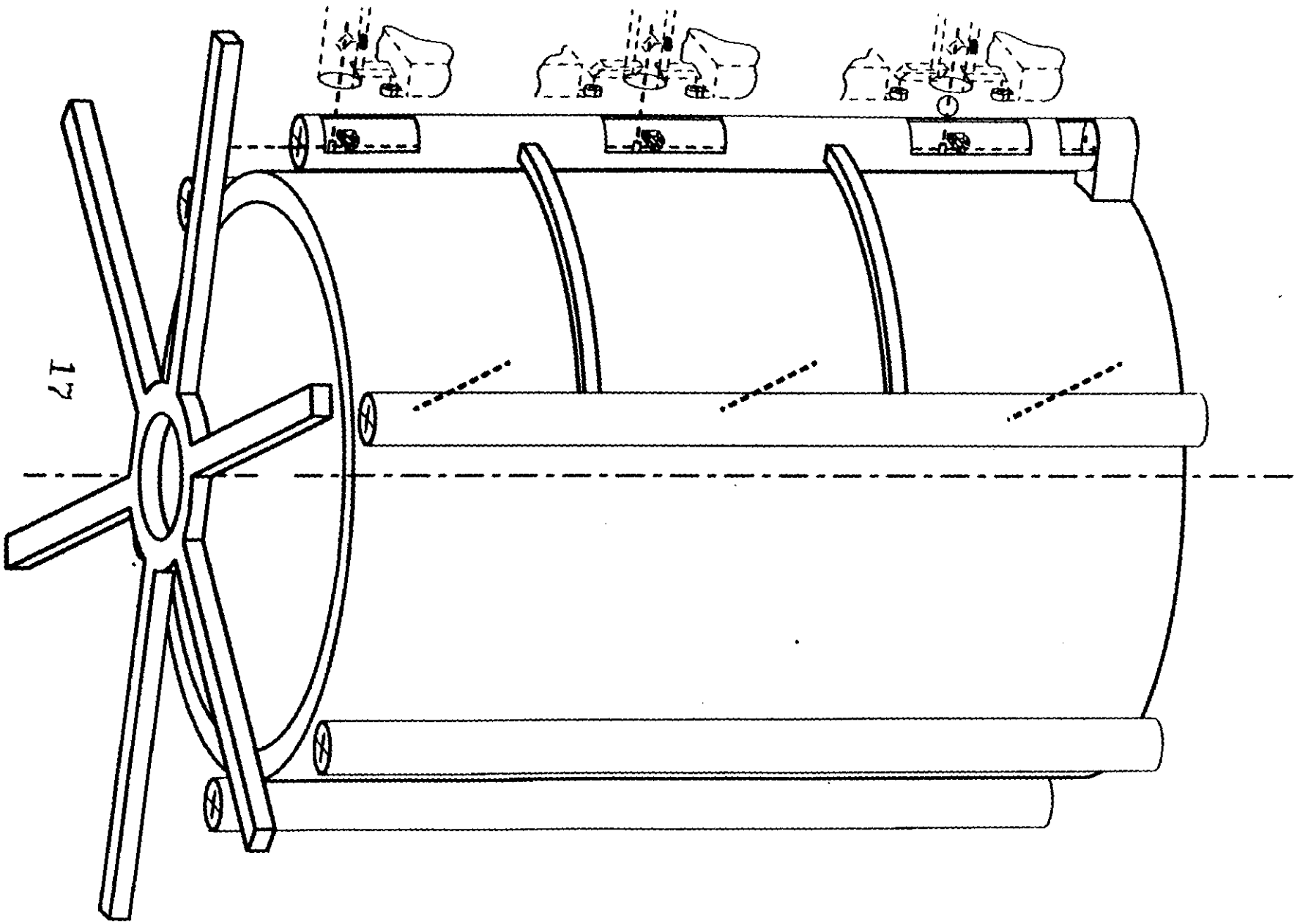

cms-al-000B
NOT TO SCALE
rob loos

MUON CHAMBERS ALIGNMENT

Future activity

a) Detailed study of the forward region in order to finalise the alignment system and provide realistic comments and suggestions to the structures and muon chambers designers.

b) Continue and optimise simulation work to simplify the choice of techniques and components.

c) Optimise the cost estimate to foresee the alignment budget.

d) Intensify contacts with labs and industries in view of an efficient collaboration in the development of alignment systems and single components.

e) Start R&D work on the different subjects (volunteers really welcome!!).

f) . . .

Outline of Alignment Section of Muon TDR Chapter

Joe Paradiso

Outline for Alignment Section (5) of Muon TDR Chapter

5.1) Local Alignment

5.1a) Local Requirements *(Ref. GEM-TN 92-120, GEM-TN-92-125)*

- Introduce precision 25 micron sagitta alignment requirement. Reproduce error budget here, or reference Section (2).
- State/reference/discuss needed precision of alignment hardware, alignment transfers into chambers, smears expected from structural dynamics (or reference such a discussion from Section (3)).
- Discuss 3-point projective alignment/interpolation concept, and mention how other local requirements (i.e. radial) are relaxed. *Reference requirements document TBC from Ostapchuk. Reference analysis memos GEM-TN-92-202, GEM-TN-92-150. Reference test results (or experimental plan) for GEM alignment test structure.*

5.1b) Local Alignment Hardware

- Introduce 3-point straightness monitor *(Ref. GEM-TN-92-124, L3, SDC).*
- Describe modifications (i.e. CCD and/or LED array) for extended range, and test results *(Ref. measurement/design memo TBC from Paradiso).*
- Discuss/analyze measurement stability of alignment monitors *Reference 9-meter Harvard/SDC tests, Draper tests, GEM alignment test structure results (if available).*

5.1c) Barrel Implementation

- Show alignment paths for muon barrel. *Reference analysis documents GEM-TN-92-150, GEM-TN-92-202.*
- Present design of chamber alignment fixtures, holes/notches through chambers for optical paths, etc. (or reference from Sec. 3?).
- Discuss installation/calibration procedure (or reference from Sec. 3?).

5.1d) Endcap Implementation

- Show alignment paths for muon endcap; also describe chamber overlap, level system, proximity detectors, etc. that are needed to reference "hidden" chamber corners together. *Reference endcap analysis document TBC (Ostapchuk, Paradiso?).*
- Discuss installation/calibration procedure (or reference from Sec. 3?).

5.2) Global Alignment

5.2a) Global Requirements *(Ref. GEM-TN-92-120, GEM-TN-92-125)*

- Summarize global alignment requirements (i.e. positioning needed for trigger and measurement/stability needed for reconstruction).
- Mention global alignment goal (i.e. 200 microns in r-phi) for improved resolution at high momentum.
- Discuss straightness monitor pointing requirements (to IP) for projective alignment corrections. *Reference requirements document TBC from Ostapchuk. Reference analysis memos GEM-TN-92-202, GEM-TN-92-150. Reference test results (or experimental plan) for GEM alignment test structure.*
- Mention alignment requirements to nonuniform magnetic field (perhaps only reference Sec. 4?)

5.2b) Global Alignment Techniques

- Discuss attainment of required global alignment via muons. Quote/plot precision attained vs. eta vs. time (i.e. plot precision attained vs. time for several eta slices). *Reference memo TBC from Mitselmakher, Ostapchuk.* Reference Sec. 3 for dynamic stability of structure (i.e. how much it is expected to move over time interval).
- If overlap of barrel chambers is employed, quantify the utility for global alignment.
- Mention possible dynamic monitoring strategies as backup *(i.e. Reference GEM-TN-92-124, Draper/SDC schemes, LLNL approaches).*

Possible Figures and Tables:

1) Table of alignment requirements (global, local).
2) Projective alignment drawing (3-chamber isometric w. lines at corners, center).
3) Plot showing correction residual for projective alignment (could reference...).
4) Straightness monitor schematic (possibly extended-range device?).
5) Block diagram of straightness monitor electronics (possibly extended-range device?).
6) Measured straightness monitor transfer function.
7) Other relevant straightness monitor measurements (stability, etc.; could reference).
8) Schematic showing alignment paths in Barrel.
9) Drawing of proposed alignment fixtures (possibly reference figures in Sec. III?).
10) Schematic showing alignment paths (and other devices) in Endcap.
11) Plot of attained global alignment precision (from muon tracking) vs. time needed for various eta slices.

Some of these figures could be referenced in other documents, and not included here. If we have results from the SSC alignment test rig, they should be included/referenced.

Endcap tower alignment monitor configuration

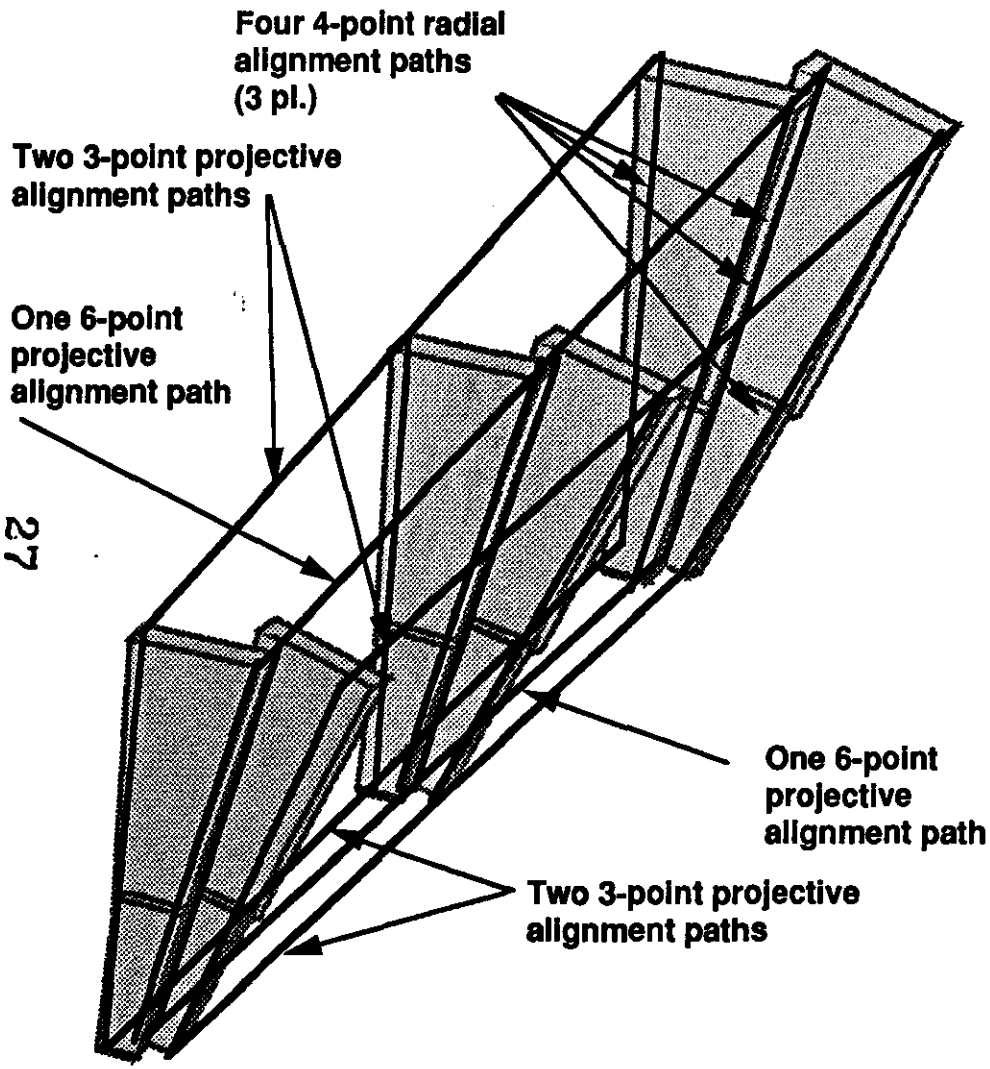

Tower isometric

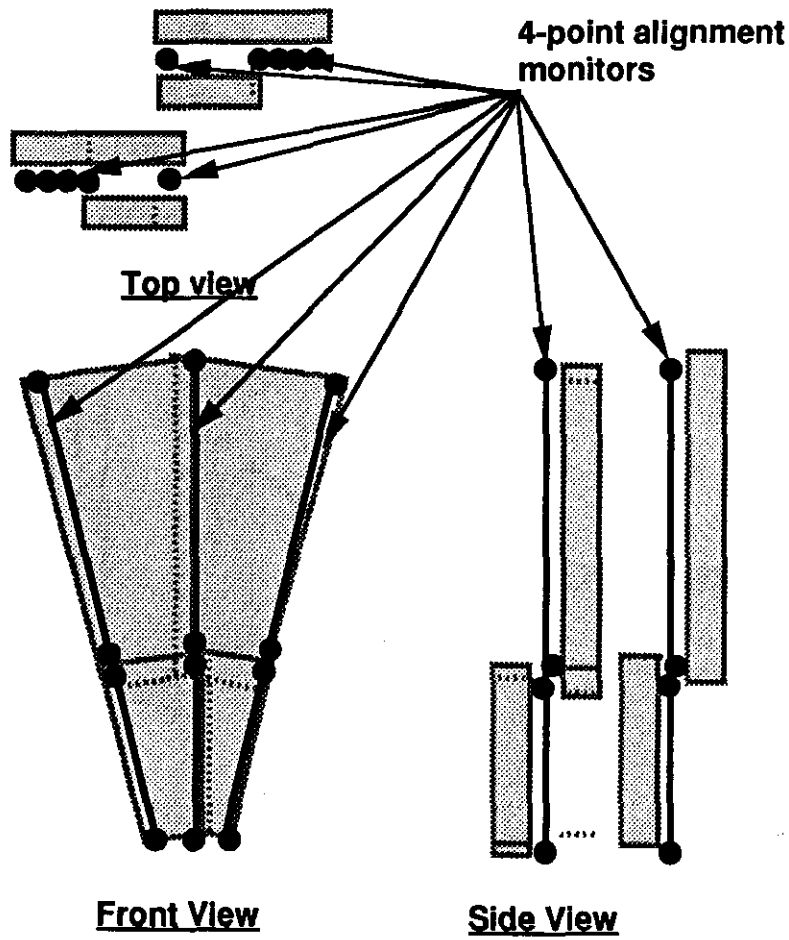

Radial alignment paths

*not drawn to scale

Endcap tower superlayer structural support

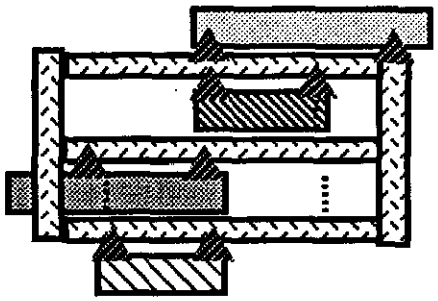

Top view

▲ = kinematic chamber support point
(each chamber is 3 point mounted)

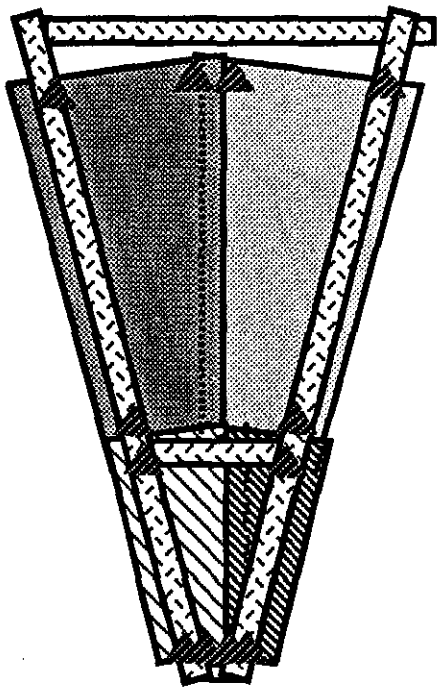

Front View

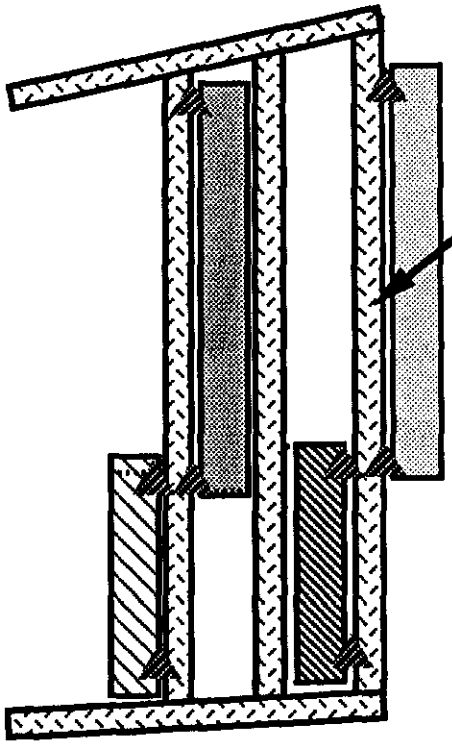

3 inch diameter tube

Side View

*not drawn to scale
additional truss bracing will be required for global stiffness

Endcap tower superlayer configuration

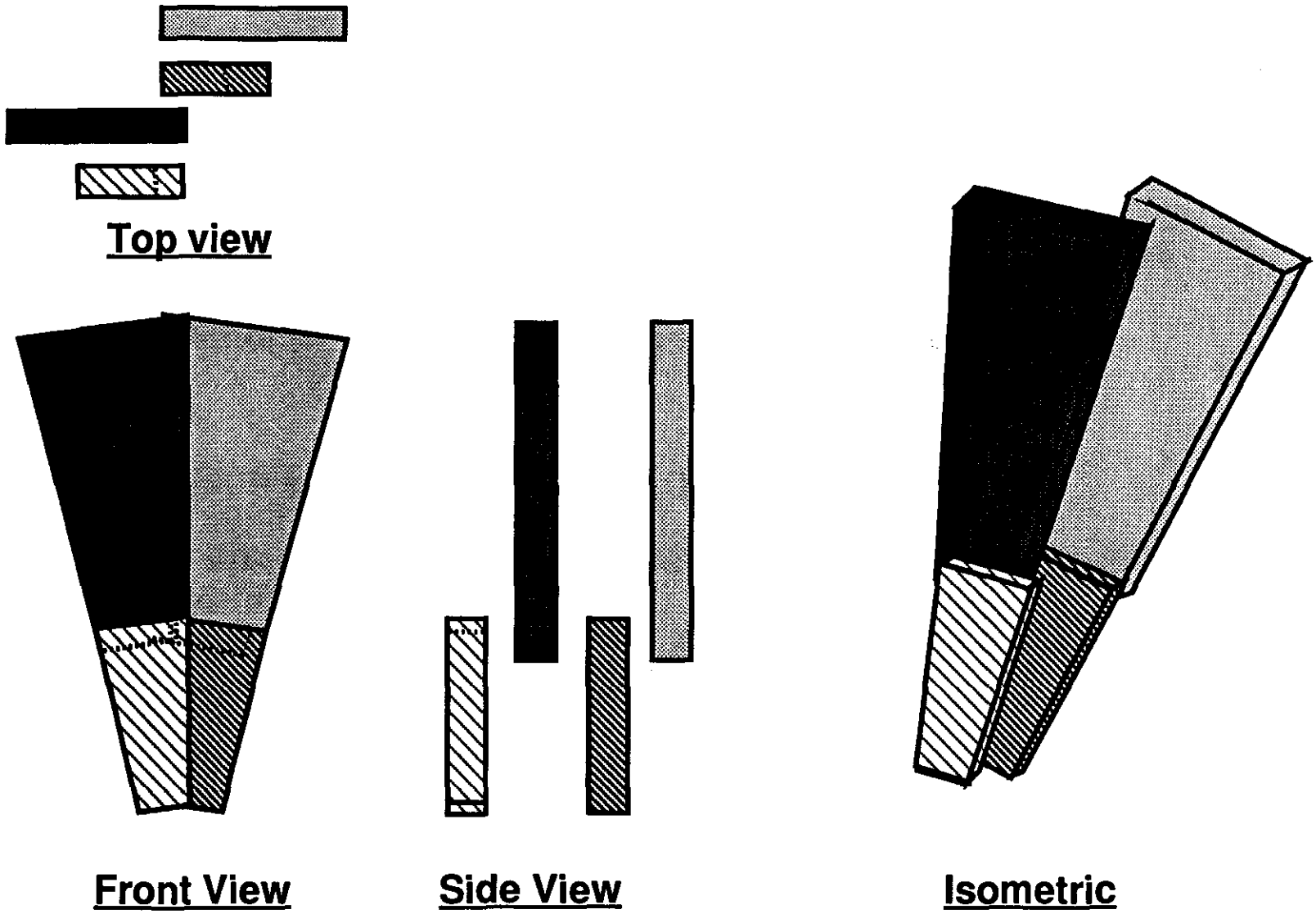

*not drawn to scale

Endcap alignment concept

- Assumptions
  - endcap is divided into 12 structural sectors
  - four chambers (outer super layer) are required to span the width of one sector
  - one sector is divided (phi direction) into 2 towers
  - small chambers (superlayer 1 and 2) at the theta=9 deg location are not considered
    - rigidly attached or will require additional alignment monitors
  - phi <u>and</u> radial overlap is required
  - all chambers are 3-point kinematic mounted

- Comments
  - 3 and 6-point projective alignment monitors are required
  - 4-point radial alignment monitors are required
    - -- 3-point if rigid structural joint between chambers could be designed

Alignment concept 1 hardware count

Assume 12 sectors per GEM half
2 tower widths per sector
2 chamber widths per tower

	Quantity per tower	Number of sensor points per path	Number of sensors per tower	Number of sensors per GEM half	Number of sensors per GEM
3-Point proj. alignment paths	4	1	4	96	192
6-point proj. alignment paths	2	4	8	192	384
4-point radial paths	12	2	24	576	1152
Total	18	--	36	864	1728

Azimuthal interleaving of superlayer chambers

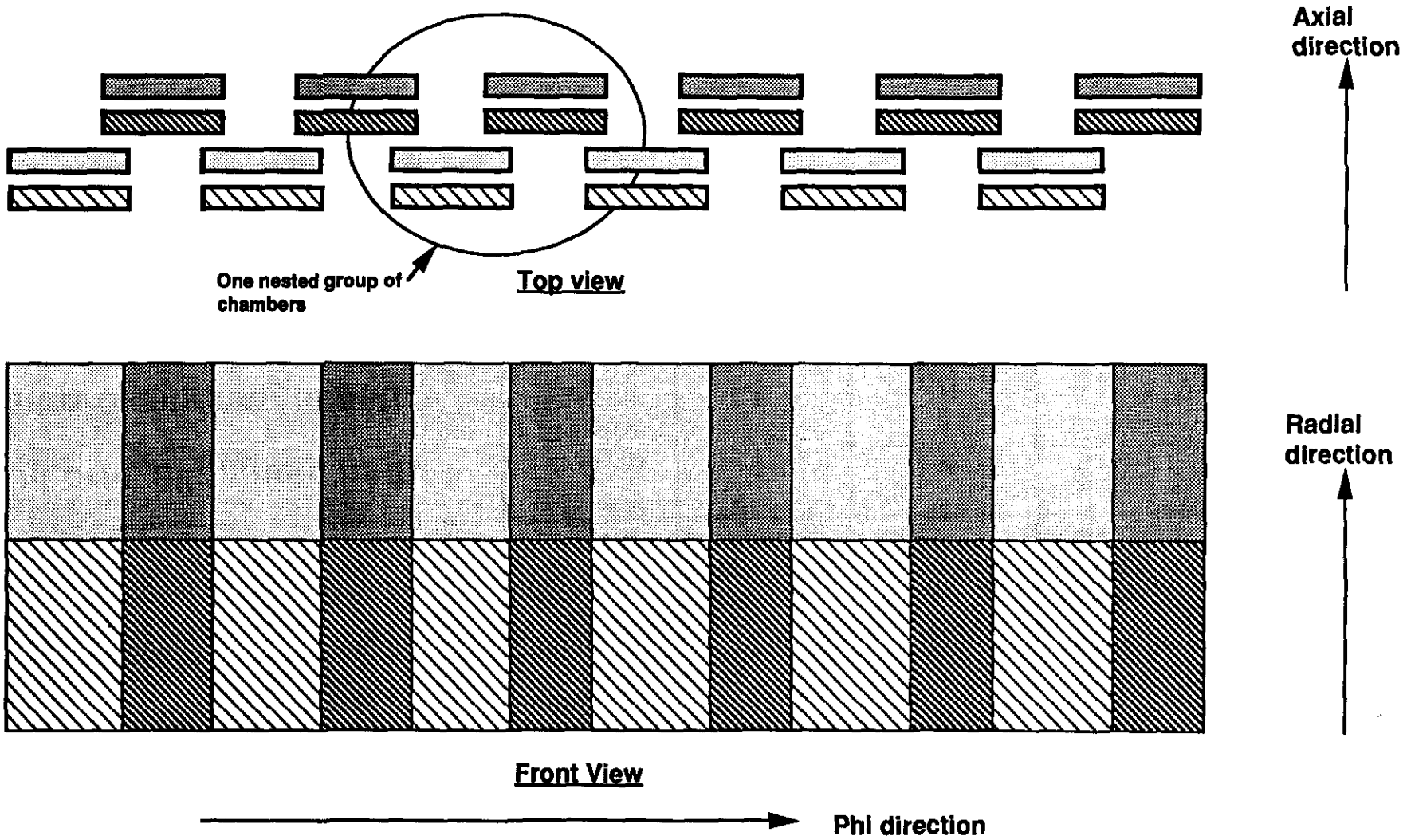

*not drawn to scale
chambers are shown to be rectanglar rather than trapezoidal to better illustrate the concept

Pre-TDR alignment and costing activities

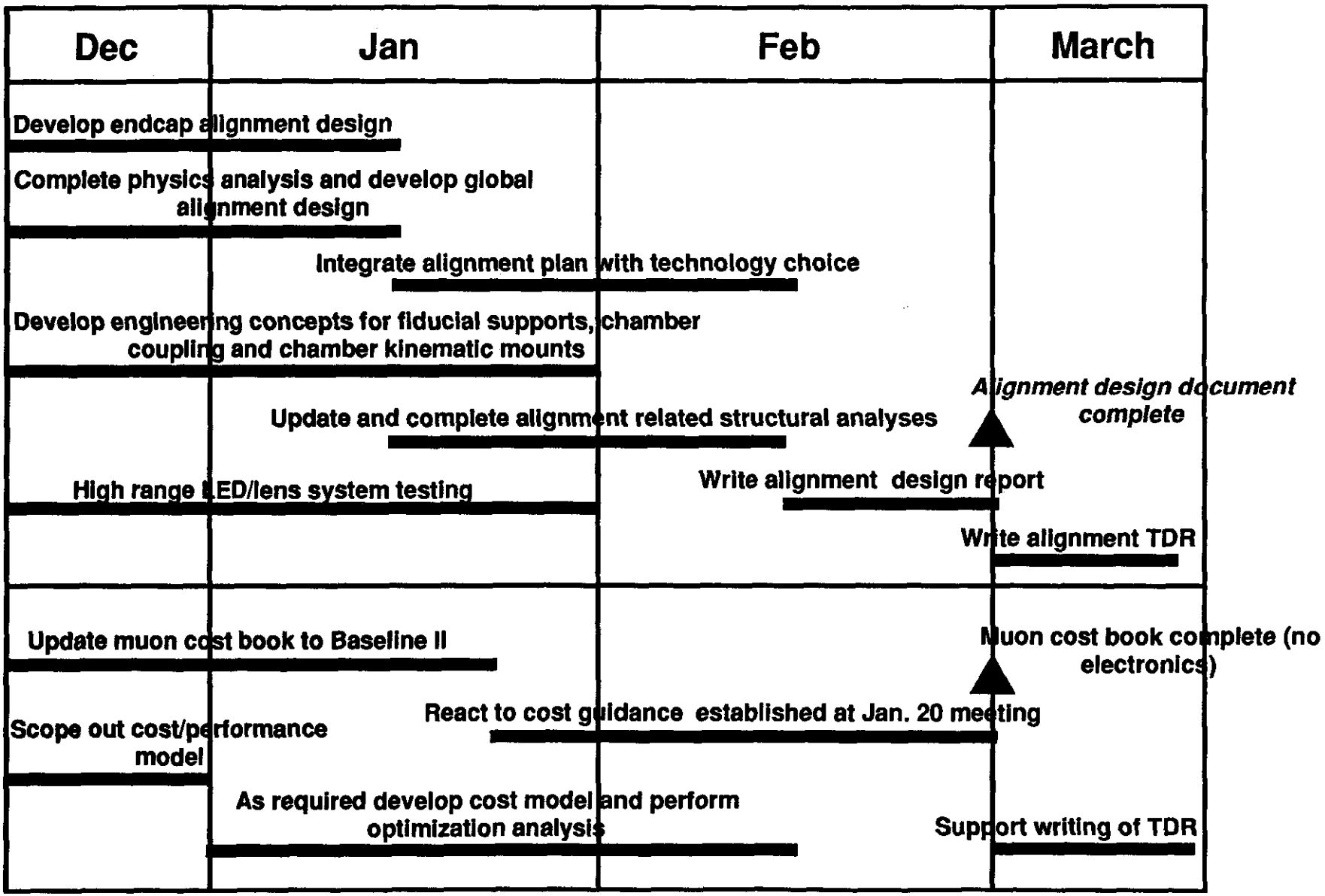

RDT Chamber Layout Middle Superlayer

Bob Miller

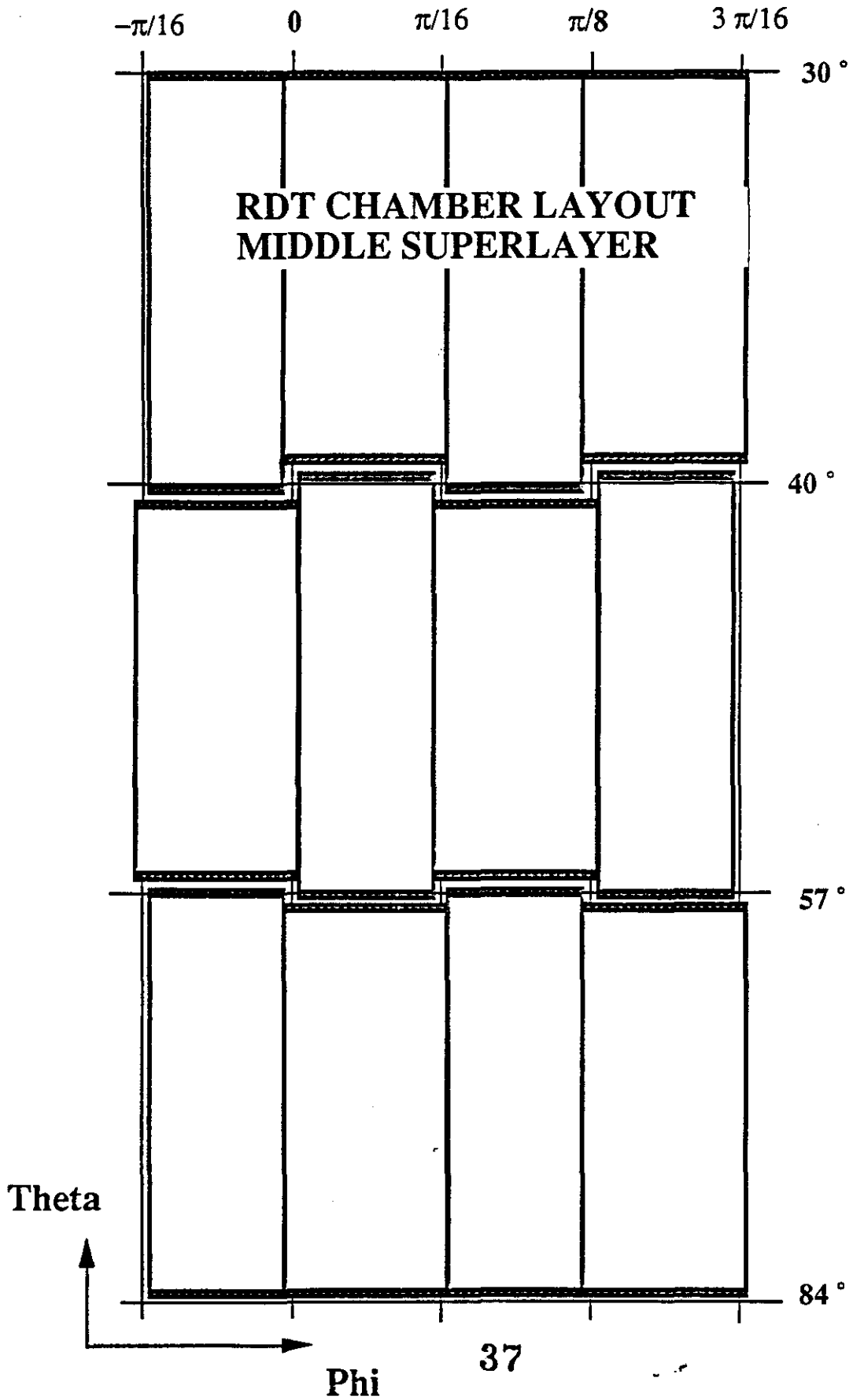
−π/16
0
π/16
π/8
3 π/16
30 °
RDT CHAMBER LAYOUT
MIDDLE SUPERLAYER
40 °
57 °
84 °
Theta
Phi

RDT BARREL, 16 SECTORS (32 CHAMBERS)
PHI OVERLAP DETAIL

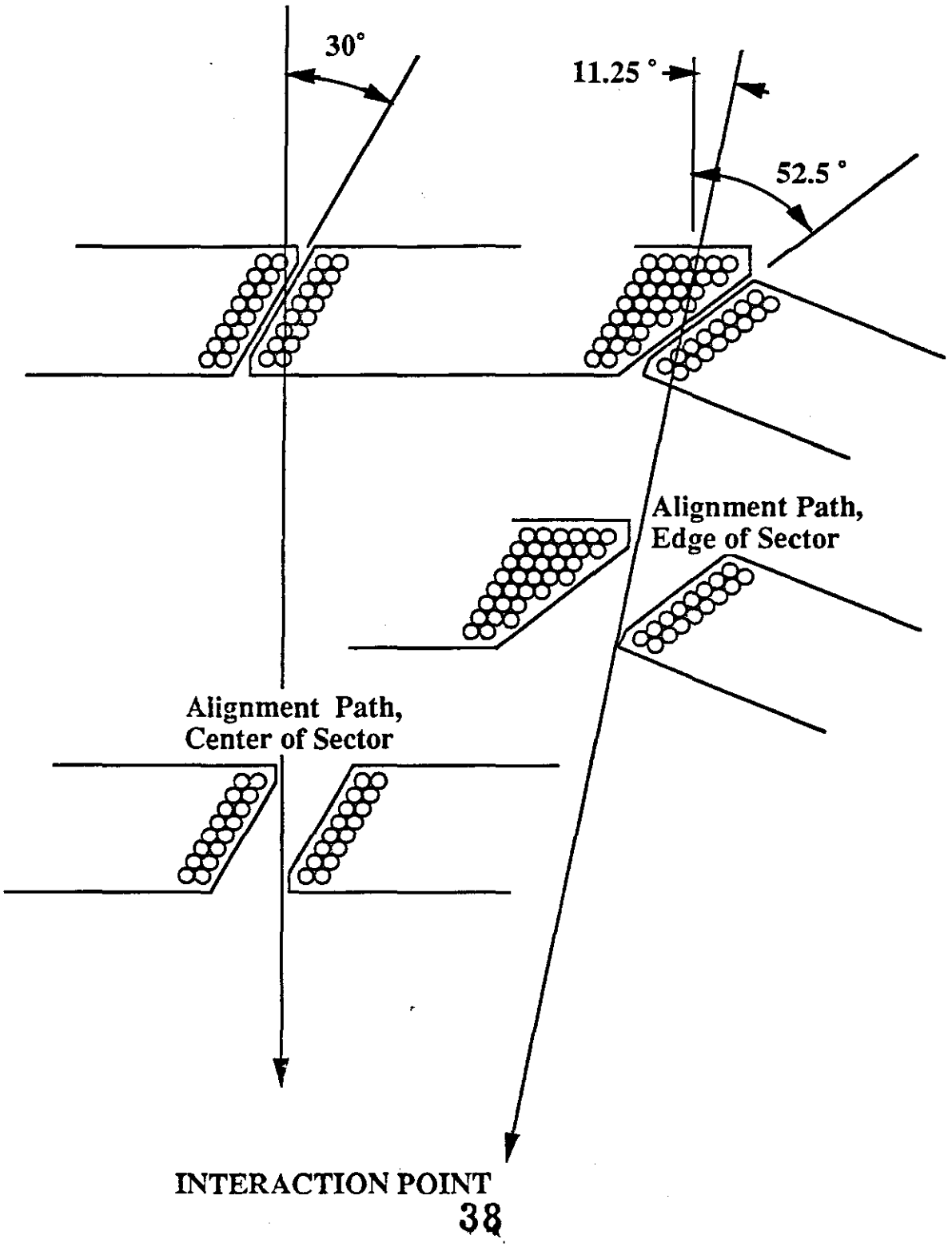

RDT Theta Crack
Middle Superlayer

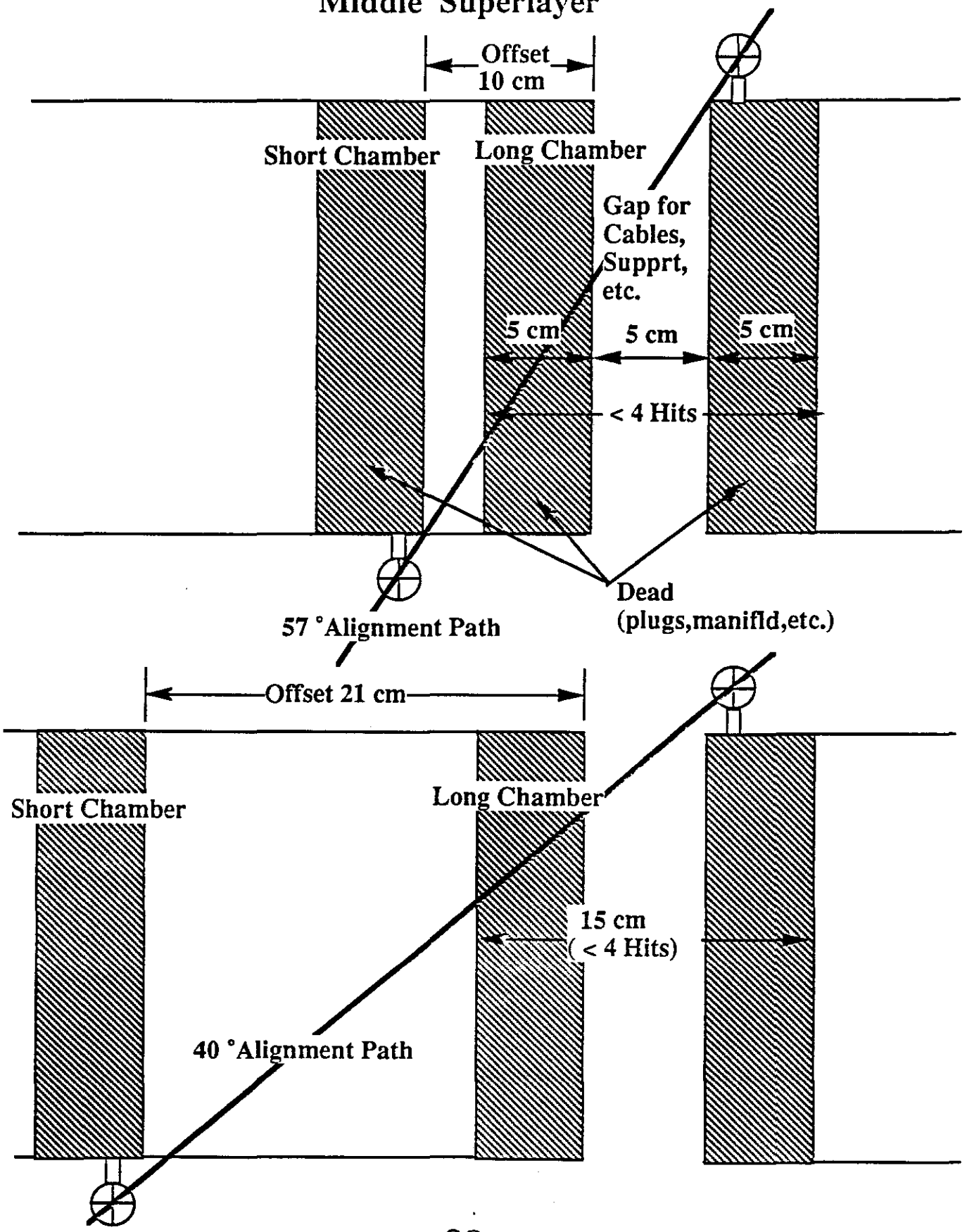

Alignment Updates

- Hardware Updates (extended range)
- Test structure suggestions
- Detector implementation
- TDR outline
- Discussion & Schedule

Joe Paradiso 6-Jan-93

GEM

Hardware Updates

- Collaboration started with SDC group (Dave Goodwin, Jacques Govignon).
- Nine-meter SM installed on optics table (GEM max. ≈ 10 meters).
  - Harvard electronics for Quad Cell and Lateral Effect photodiode .
  - VME Data acquisition system delivered, setup this week.
  - Automatic scanning fixture will be installed for quick device calibration.
  - CCD/CID camera and frame grabber system present.
- *Use for testing/validating wide-range systems*
- Series of photodetectors ordered for evaluation (IR&D for B-effects).
  - Quad Cells (UDT SPOT9DMI, EG&G C30844E).
  - 2-axis Lateral-effect photodiodes (UDT DL10, Hamamatsu S1880/S2044, Sytek 2L4SP, Heimann AP-10).
  - 1-axis Lateral-effect photodiodes (UDT SL5, Hamamatsu S1352, Sytek 1L10SP, Heimann LP-15).
- LED Blocks ordered from Sharp (8 x 8, 16 x 16 matrix, ≈ 1.9 - 3.3 mm ptich).
  - Plan to compare with precisely placed fiber bundle, ≈ 1 mm pitch.
  - Test/calibrate on scanning table

Search for CCD devices & system

- Several low-cost 2D devices located:
  - Dyna DA300 (160 x 244, ⅓), DA301 (160 x 244, 1/6"); $30. - $40.
  - Sharp LZ2314/Z (512 x 492, ⅓), LZ2114J (512 x 492, ½); $44.
  - Others by Panasonic, Toshiba, Sony; waiting for details
- Unfortunately, all need a support circuit for driving, conditioning
  - Could be simplified; i.e. don't need RS-170, AGC, etc...

-Look for cheap monochrome camera card
⇒ Board-level solution for price of lateral cell in cost estimate?

- How does one apply such devices?
  - Existing LEDs can give plenty of light (see tests)!
    (most CCD chips have adjustable shutter times)
  - Could centroid LED spots, several from LED block, or image a coded mask (most interesting)!
  - Project a complicated (i.e. pseudorandom) pattern and autocorrelate at several resolutions (use self-similar image).
    → Complicated processing, rotations complicated.
  - Image a 2D bar code, and "read off" coarse position; centroid bars for vernier
    → Low processing overhead, diffraction limit OK?

GEM

Siemens LED (SFH480)
Focused Image

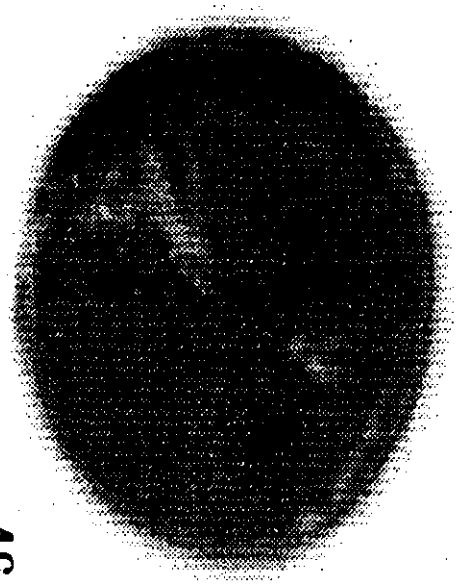

Motorola LED (MFOE1102)
Focused Image

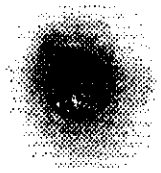

Focussed LED
Eyeglass blank
lens

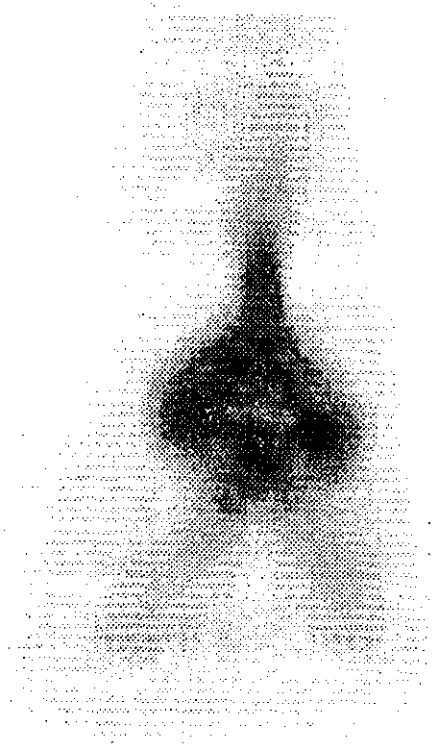

9 Meter Baseline; 1/2" CID array, 512 x 512 Grabber

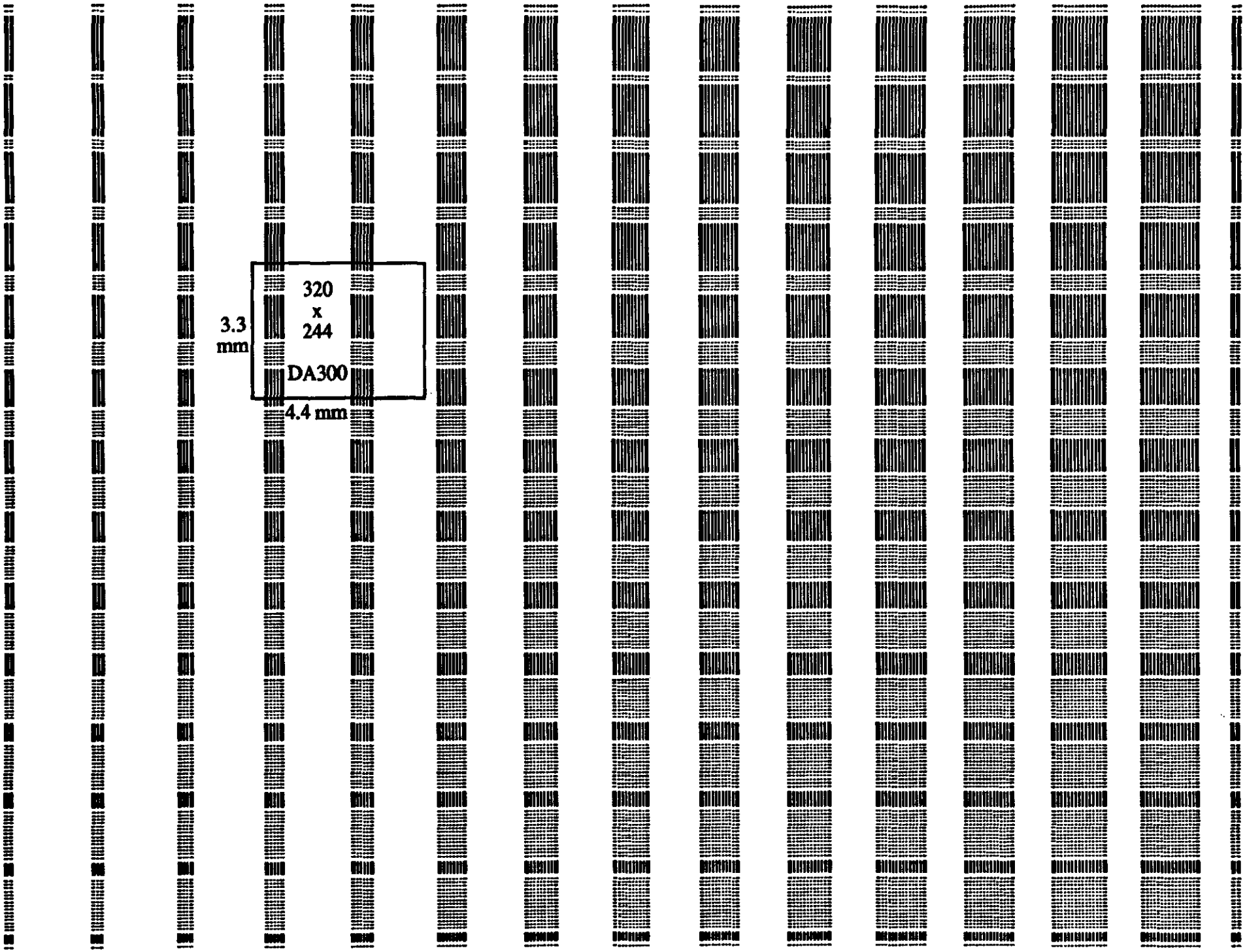
320
x
244
DA300
3.3
mm
4.4 mm

Extended Range Deliverables

- Detector Characterizations (Quad Cells, Lateral effect devices).
- Results for LED block (commercial, custom [w. good LED's], fiber bundle).
- CCD tests with commercial cameras (image 2D bar codes).
- Estimate costs for impleme.ntation of these systems, pick baseline
- Check effects of lens diameter (diffraction, intensity) and turbulence/thermals.

Jan/Feb. timeframe; draft memo for alignment manifesto

GEM

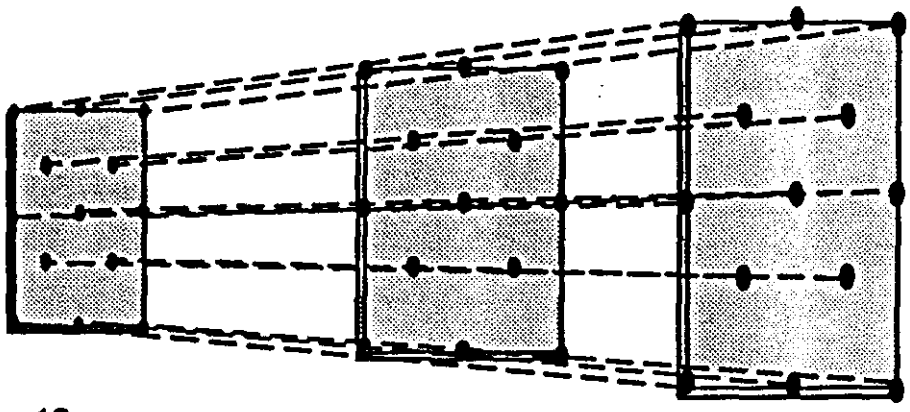

Each structure plane will possess 13 mounting sites (i.e. holes) for alignment fixtures (3 along each side, 4 at the center of each quadrant, and one in the middle). The sites at the edges will be used for projective alignment measurements. The sites in the center will be used to check the interpolation techniques. Assuming that the Harvard electronics are built, we'll need one 60-channel VME scanning ADC, two 8-channel SEM controller cards, and at least 13 quad cell buffer cards (the electronics cost was estimated at $130. per straightness monitor path). If we use an extended range system, we'll need either a multiplexed frame-grabber (CCD) and/or a programmable output register (multiple LED).

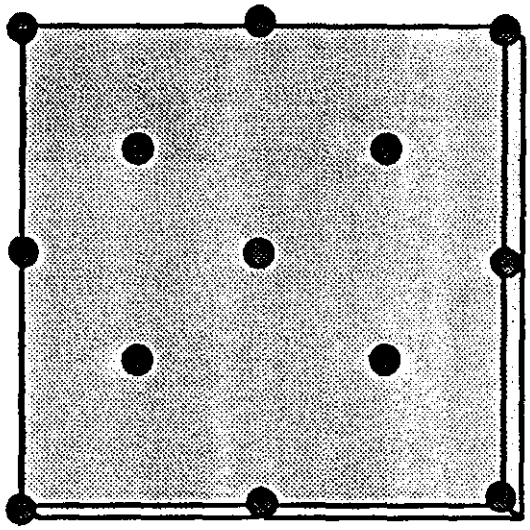

The detector mount will be a simple plate, with 2 holes that bolt into the mount. The plate can be moved within a few mm with these bolts loose, then tacked down when aligned. The LED, Lens, and detector elements will be fixed to these plates, as crudely sketched below.

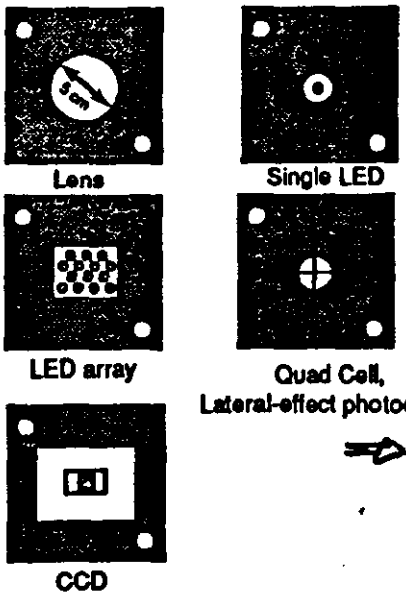

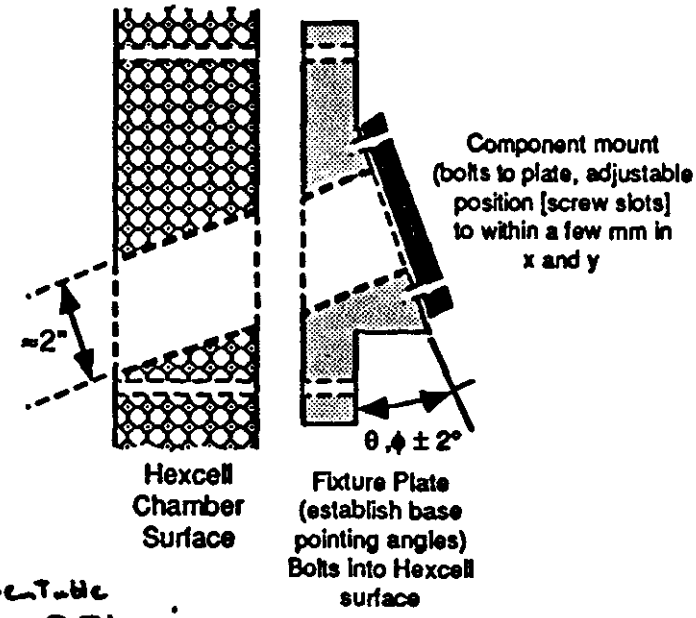

⇒ Quickly implementable
Extended range options:
- LED Block
- Single-axis Lateral cell [Provided inertable to required precision]
- CCD possible, but need multiplexed readout, software.
  ⇒ use commercial mini-cameras?

Setup Procedure

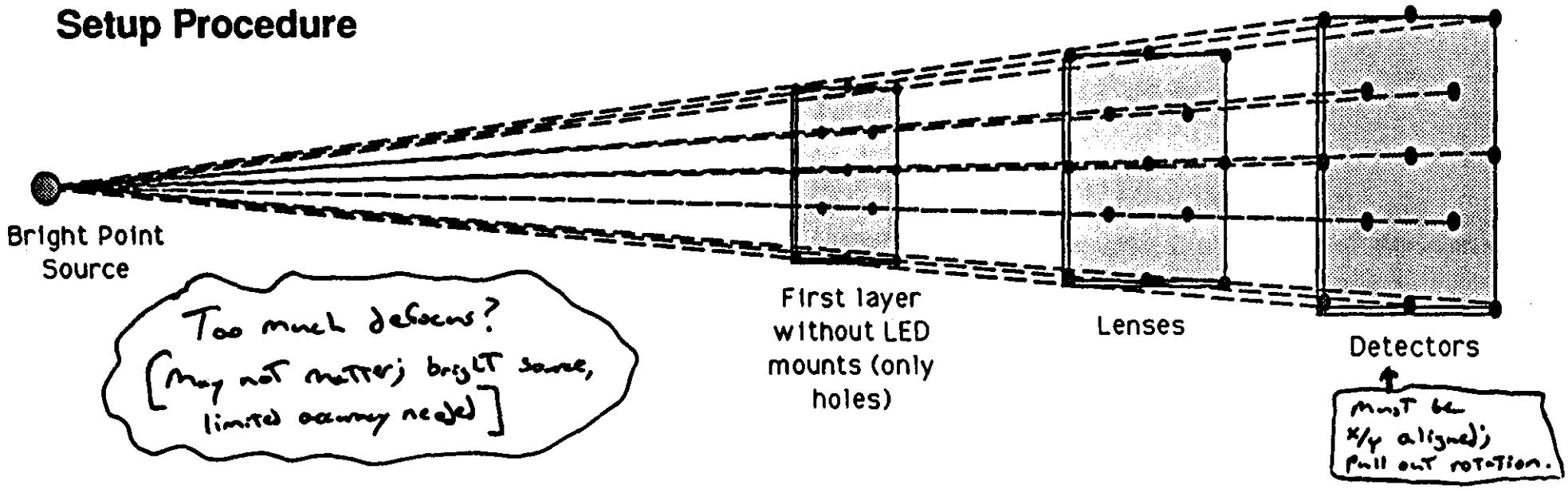

First, mount the lenses and photodetectors (rough positioning; few mm.); leave the LED plates off. Put a point source at the hypothetical IP location. Move the lenses until the maximum intensity (and minimum difference signal) is received at the detectors. Then install the LED plates, and move these about until they produce also a centered signal (i.e. minimum difference, maximum sum on a quad detector). The projective alignment paths will then be established. When the chamber planes are moved, etc. during tests, they will reflect the relative misalignment of the structure. For the interpolation to be effective, we'll need to know the position of the alignment fixtures on the chamber surface to within a few mm; this should be attainable with this system. Other variations are possible; the most extreme is to build precision alignment fixtures (with the optical components centered relative to the edges); these then mate to precise locations on the chamber surfaces, intrinsically aligning the system. This option may result in more expensive (and less flexible) fixtures, and be unable to easily reference another projective point (being able to adjust the outer fixtures to point to another IP location is an important part of our tests).

Current Components: Lens = Melles Griot 01-LMP-051 (f = 1 m) or 01-LMP=055 (f=1.5 m)
Both are meniscus lenses, diameter 50 cm, price roughly $30.
LED = Under debate, something like Motorola MFOE1102 or Siemens SFH480 series
Price is under $30. apiece (the Siemens unit is much cheaper). We may want to equip some or all paths with LED arrays, now being investigated.
Detector = UDT SPOT 9DM1 or EG&G C30844E. Price will be $50. - $100.
May want to equip some paths with CCD arrays (now in development) or single-axis Lateral-effect photodiodes.

Implementation/Barrel

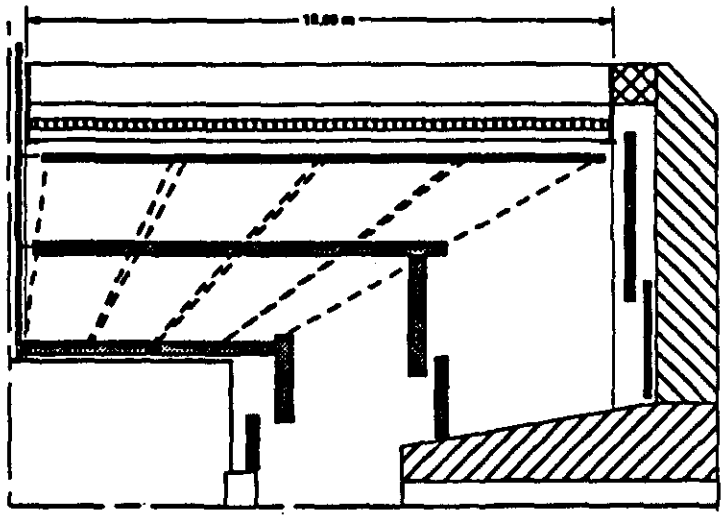

Side view (rθ)

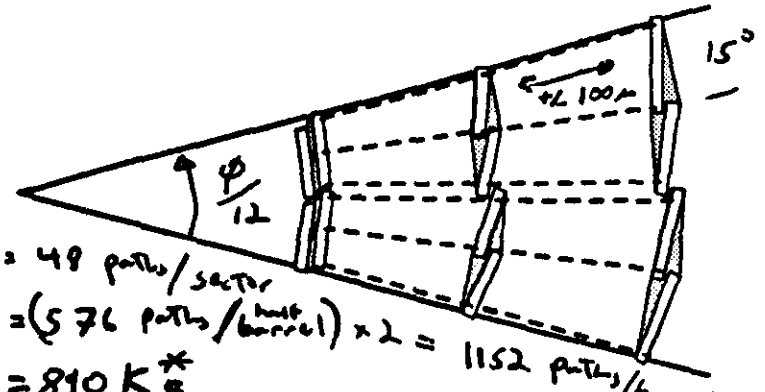

6 × 8 = 48 paths/sector
= (576 paths/half barrel) × 2 = 1152 paths/barrel
= 810 K$*

End view (rφ)

Flawless Fixtures..

[Favored by Frank N. et. al.]

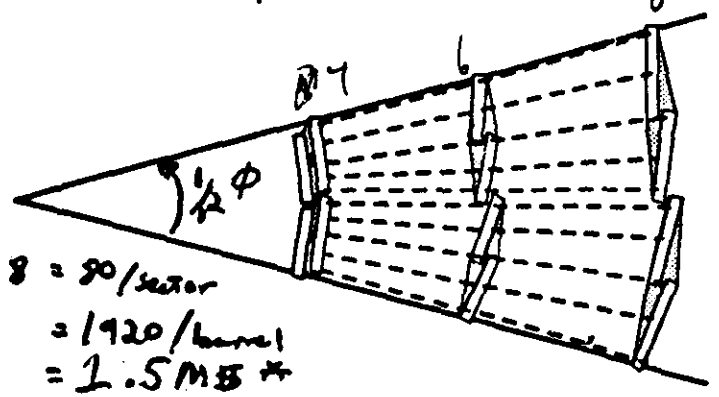

10 × 8 = 80/sector
= 1920/barrel
= 1.5 M$ *

End view (rφ)

[12 × 8 = 2304/barrel
= 1.8 M$*
– All chambers w. 3-pt.

Brute Force

- How do we divide things up in phi?
  - Stable endplates limit paths?
- Once decided, costing of Jan. 20 follows.
  - * Previous estimate for cost of 3-pt. string (770 $) high?
    - → Keep for now until wide-range Technology decided?
- Mechanical issues: holes through chamber, fixturing (esp. in middle of lower chamber), etc...
  - → many in chamber cost?
- Installation + calibration
  - → must added for cost analysis....

GEM

Implementation/Endcaps

~ Chamber layout still changing!!! ~

- Rick's scheme ~ Good idea to link chambers along lines of ϕ
  - Needs lots of multipoint channels...

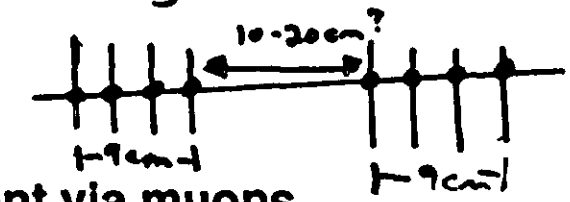

- Other possibilities / modifications
  - Chamber overlap to transfer alignment via muons
  - Link inner chamber edges mechanically, use proximity sensors.
- Adopted endcap configuration; grouping chambers in endplates?
  - Quickly get ϕ-offset, but can't decouple radial shift. → Use ϕ-dependance!
  - Complicated by magnetic field!! → Spec. some overlap!

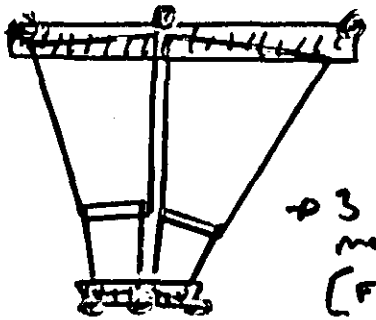

→ 3 3-point monitors [F.N.]

→ Adopt SDC-Type Scheme? [3-pt. monitor w. proximity pickoff]

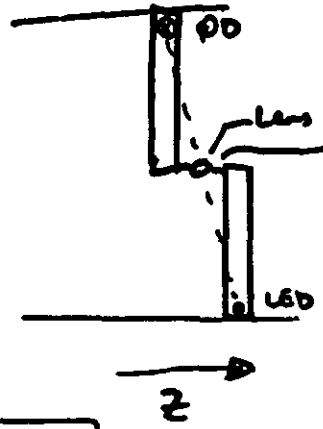

Proximity monitors (2-axis)

→ How-mount lens to one chamber, measure proximity to other?

→ Z-shift not too critical here (275 mm OK...)

$$\Delta z \approx \frac{25\,mm}{\tan(7.5^\circ)\sin(20^\circ)} \approx \frac{25}{.045} = \underline{555\,\mu m}$$

- This measurement complimentary to muon link?

GEM

Calibration and Installation

1) On Superlayer:

- Fixtures fabricated [with projective angle +/- ≈ 2° ?]
  - Calibrated to optical center or reference position [as currently done].
- Fixtures mated to proper position on chamber.
  - Optically lined to fiducials + strapped down?
  - Precision fixture surfaces backed against reference edges on chamber?
  - → Precision needed here if calibration possible in situ??
- Calibration of alignment fixture checked wrt. chamber:
  - Survey / Inspection Technique?
  - X-ray jig (use both chamber + alignment system — compare)?

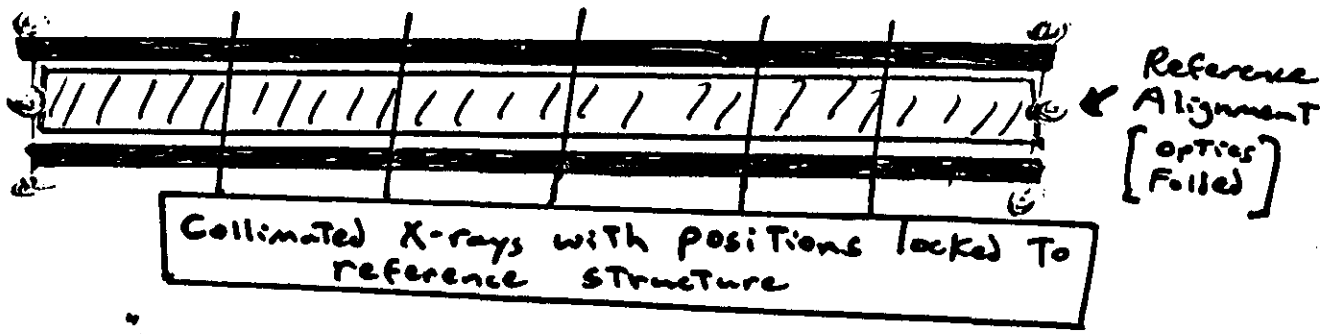

2) In "Sliceant":

- Sliceant assembled + oriented vertically for cosmic check.
- Alignment system activated, trimmed, compared w. cosmic data.
  - ⇒ Needed / Relevant in light of quasi-big-wheel?

460 / 2 ...

≃ 225

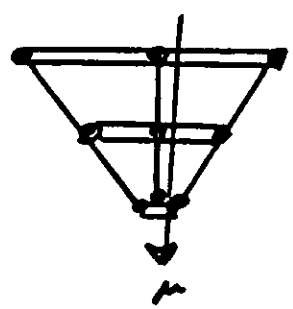

Calibration and Installation (II)

③ In Monolith — Global calibration
~ Possible Scheme? —

- Build big wheel with optical path through inner layer [dummy chamber?]
- Place point-source (or directed beam) @ IP location relative to outer layer [which has been surveyed into pos.]
- Move middle layer to center defocussed illumination.
- Install inner layer (w. light source). Move inner layer to null offset from lens/detector.

⟹ Projective paths established ~ sufficiently stable??

More Realistic Alternatives?

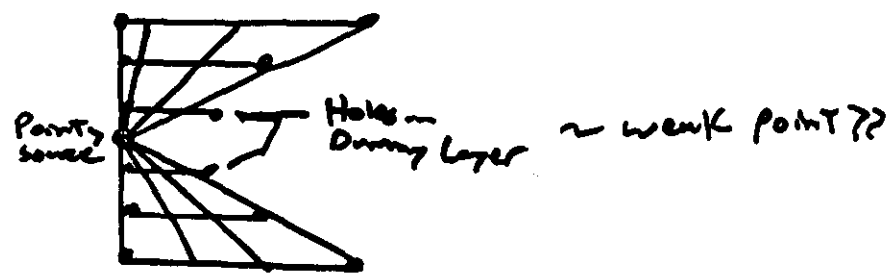

- Photogrammetry/Survey good enough [w. adjustment to set projective path?]
- X-rays directed from IP measure chamber misalignment
  - Scan perimeter of tower for pointing reference
  - Correct chamber position + iterate....
  - Good check of local alignment!

~ Need guesstimate for costing ritual ~

Outline for Alignment Section (5) of Muon TDR Chapter

5.1) Local Alignment

5.1a) Local Requirements *(Ref. GEM-TN 92-120, GEM-TN-92-125)*

Already in intro to μ-section

- Introduce precision 25 micron sagitta alignment requirement. Reproduce error budget here, or reference Section (2).

Chamber alignment xfer in chamber section??

- State/reference/discuss needed precision of alignment hardware, alignment transfers into chambers, smears expected from structural dynamics (or reference such a discussion from Section (3)).
- Discuss 3-point projective alignment/interpolation concept, and mention how other local requirements (i.e. radial) are relaxed. *Reference requirements document TBC from Ostapchuk. Reference analysis memos GEM-TN-92-202, GEM-TN-92-150. Reference test results (or experimental plan) for GEM alignment test structure.*

5.1b) Local Alignment Hardware

- Introduce 3-point straightness monitor *(Ref. GEM-TN-92-124, L3, SDC).*
- !! Describe modifications (i.e. CCD and/or LED array) for extended range, and test results *(Ref. measurement/design memo TBC from Paradiso).*
- Discuss/analyze measurement stability of alignment monitors *Reference 9-meter Harvard/SDC tests, Draper tests, GEM alignment test structure results (if available).*

5.1c) Barrel Implementation

- Show alignment paths for muon barrel. *Reference analysis documents GEM-TN-92-150, GEM-TN-92-202.*

{Already There?}

- Present design of chamber alignment fixtures, holes/notches through chambers for optical paths, etc. (or reference from Sec. 3?).

What do we provide? Not here?

- Discuss installation/calibration procedure (or reference from Sec. 3?).

5.1d) Endcap Implementation

!!!

→ Analysis Task

- Show alignment paths for muon endcap; also describe chamber overlap, level system, proximity detectors, etc. that are needed to reference "hidden" chamber corners together. *Reference endcap analysis document TBC (Ostapchuk, Paradiso?).*
- Discuss installation/calibration procedure (or reference from Sec. 3?).

What do we provide?

5.2) Global Alignment

5.2a) Global Requirements *(Ref. GEM-TN-92-120, GEM-TN-92-125)*

- Summarize global alignment requirements (i.e. positioning needed for trigger and measurement/stability needed for reconstruction).
- Mention global alignment goal (i.e. 200 microns in r-phi) for improved resolution at high momentum.
- Discuss straightness monitor pointing requirements (to IP) for projective alignment corrections. *Reference requirements document TBC from Ostapchuk. Reference analysis memos GEM-TN-92-202, GEM-TN-92-150. Reference test results (or experimental plan) for GEM alignment test structure.*

Done? →

Pass off? →

- Mention alignment requirements to nonuniform magnetic field (perhaps only reference Sec. 4?)

5.2b) Global Alignment Techniques

!!!

- Discuss attainment of required global alignment via muons. Quote/plot precision attained vs. eta vs. time (i.e. plot precision attained vs. time for several eta slices). *Reference memo TBC from Mitselmakher, Ostapchuk.* Reference Sec. 3 for dynamic stability of structure (i.e. how much it is expected to move over time interval).

Ignore?

- If overlap of barrel chambers is employed, quantify the utility for global alignment.

Can keep vague as backup?

- Mention possible dynamic monitoring strategies as backup *(i.e. Reference GEM-TN-92-124, Draper/SDC schemes, LLNL approaches).*

Possible Figures and Tables:

1) Table of alignment requirements (global, local).
2) Projective alignment drawing (3-chamber isometric w. lines at corners, center).
? — 3) Plot showing correction residual for projective alignment (could reference...).
4) Straightness monitor schematic (possibly extended-range device?).
5) Block diagram of straightness monitor electronics (possibly extended-range device?).
6) Measured straightness monitor transfer function.
7) Other relevant straightness monitor measurements (stability, etc.; could reference).
8) Schematic showing alignment paths in Barrel.
— 9) Drawing of proposed alignment fixtures (possibly reference figures in Sec. III?).
10) Schematic showing alignment paths (and other devices) in Endcap.
11) Plot of attained global alignment precision (from muon tracking) vs. time needed for various eta slices.

Some of these figures could be referenced in other documents, and not included here. If we have results from the SSC alignment test rig, they should be included/referenced.

PASS
Projective Alignment System Simulation

Jacques Pier-Amory

I apologize for the quality of the copies

Marcus

PASS

59

PROJECTIVE ALIGNMENT SYSTEM SIMULATION

PRD/JPA
12/24/92

GEM TN-92-202

New Approach to Muon System Alignment

G. Mitselmakher & A. Ostapchuk
SSC Laboratory

October 2, 1992

Abstract:

New approach to the GEM muon system alignment is proposed. Projective straightness monitors readings completed with suitable interpolation procedures are used for correction of high momentum muon sagitta.

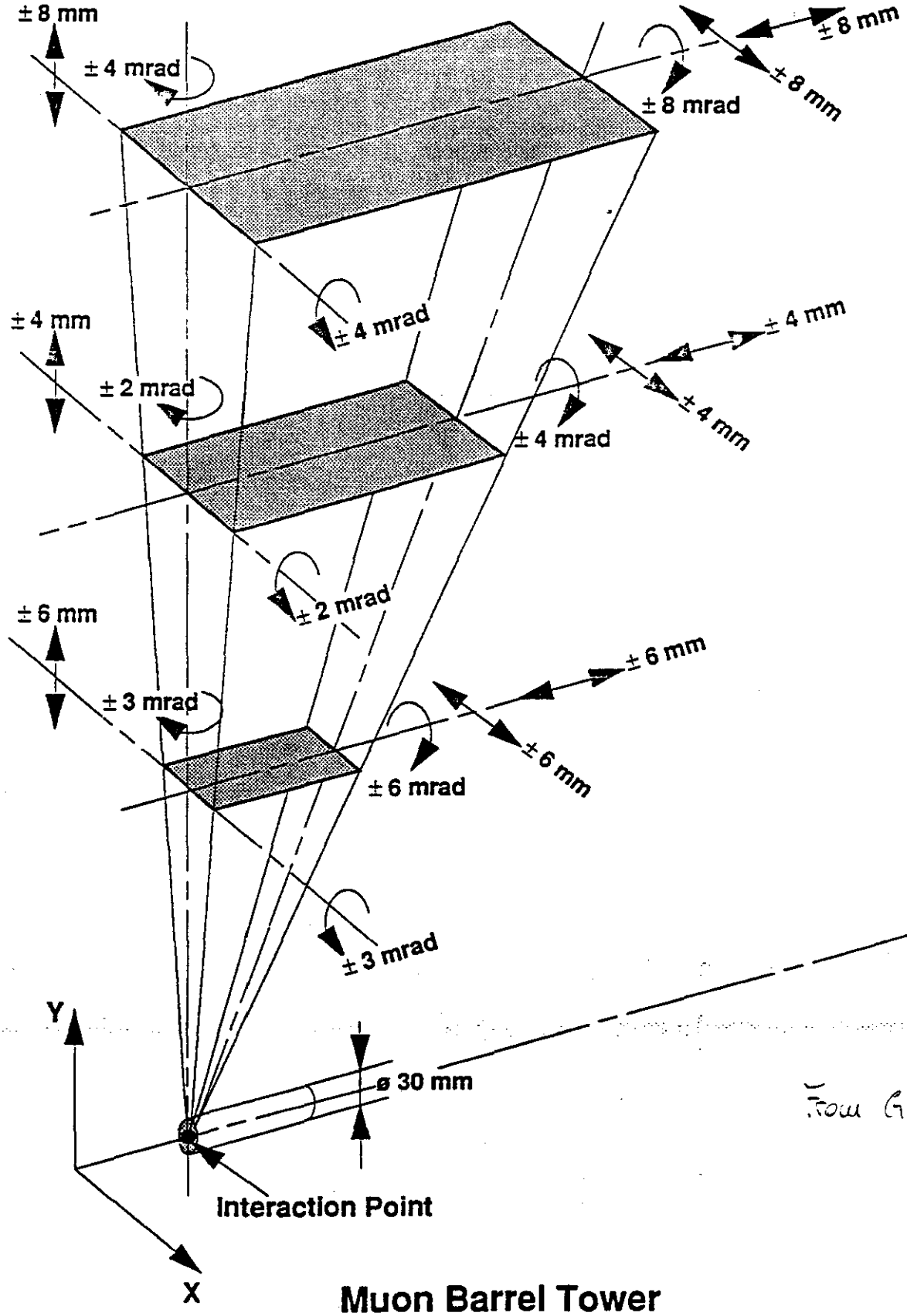

From Geua + Rudici

Muon Barrel Tower Positioning Accuracy

PRD/JPA
12/29/92

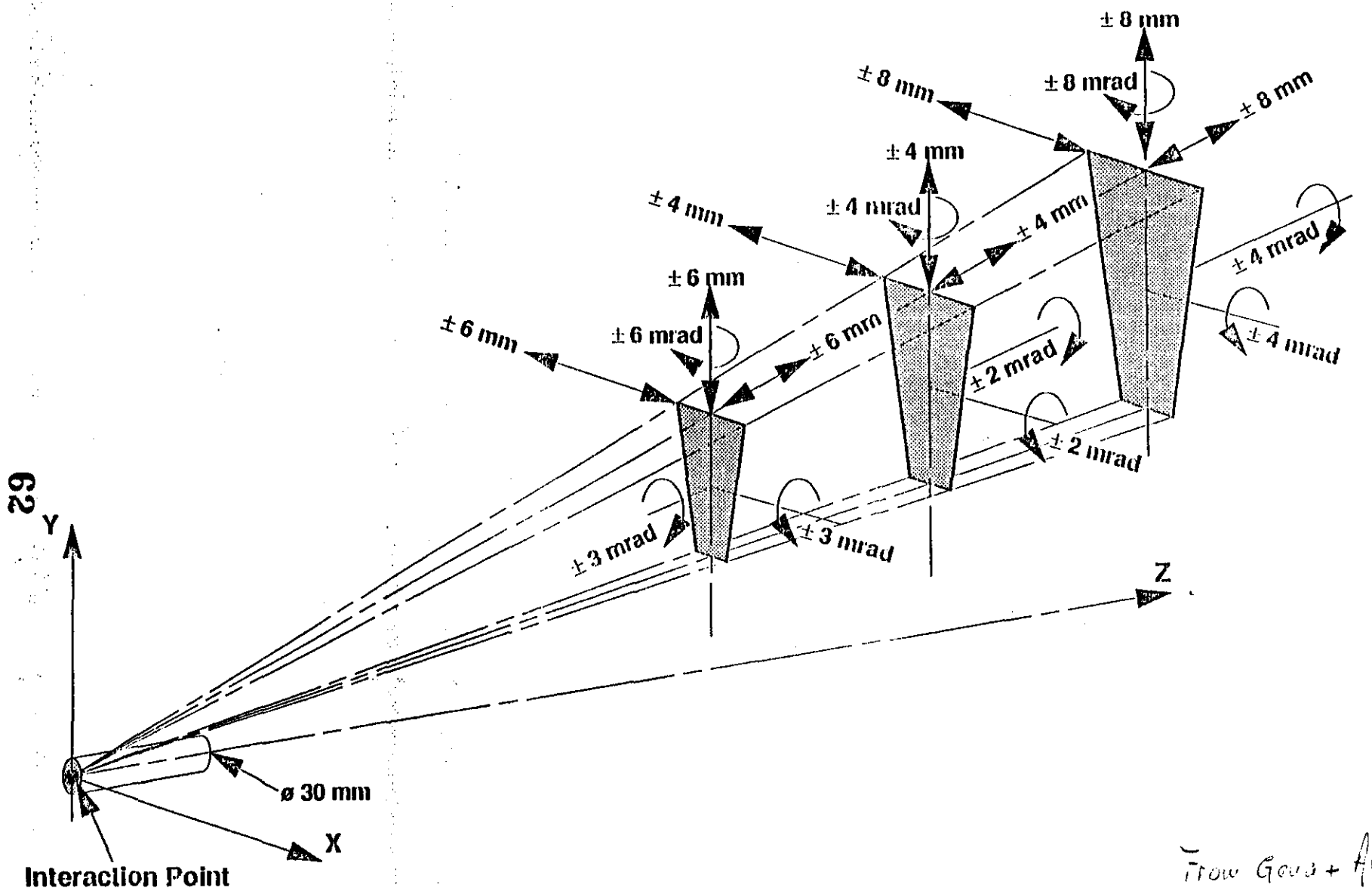

From Gous + Austrei

Muon EndcapTower
Positioning Accuracy

PRD/JPA
12/29/92

PASS

Multipurpose test rig

1 - To check the method to calculate the sag correction factor - The technical prove that the mathematic model is working.

2 - To prove the viability of the projective alignment system.

3 - To introduce the survey team in the GEM alignment concept

4 - To check some chamber concepts and procedures.
- Fixiting on floating feet.
- X Y and Z adjustments.
- Installation / removal - Positioning repetability.

5 - To learn, to teach and eventually to impress.

6 - To open the rig to other alignment purposes not exclusively GEM.

I think here about other labs or firms.

PRD/JPA
12/28/92

PASS - Cost evaluation

Designation	Description	Quantity	$/each	$ total
Base	Al.profile	1	2700	2700
Leveling pad	Original positioning then tower sag	6	60	360
Electronic bubble level	Definition of the original base then for tower sag	6	1500	9000
Carbide pad retainer	For bubble level only	6	180	1080
Carbide pad	For bubble level and for chamber measuring	32	5	160
15v power supply unit	Bubble level and temperature sensors power supply	1	350	350
Patch panel	1 for leveling, 1 for alignment and 1 for temperature sensors	3	250	750
Survey plug	For positioning checking	102	30	3060
Chamber	Excel panel with a lot of machinings and inserts	3	1600	4800
Reference bar	For chamber	6	200	1200
Digital dial indicator	For the chamber reference bars and for the long measuring stick	2	350	700
Stand feet	Included re inforcing struts with base attachment	6	710	4260
Flexure feet	Included both end clamps and support	12	300	3600
X and Y adjusting rod	Included stop on the chamber and support on the stand feet	9	220	1980
Dial indicator	Included support rods only	18	75	1350
Dial support	Independant to the base - For stand feet	6	280	1680
Dial support	Independant to the base - For base	2	100	200
Measuring stick (short)	For calibration and checking	4	100	400
Measuring stick (Long)	For calibration and checking (Carbon fiber rod)	2	400	800
Reference bar	For stand feet - Included calibration spigot and positioner	2	350	700
Leveling bar	For the calibration / checking of the stand feet	1	100	100
Set of alignment device	Led - Lens (2x) - Quad	12	250	3000
Alignment support	For the basic alignment and for the chambers	37	200	7400
Temperature sensor	Installed on 3 levels	14	25	350
Handling device	Included lifting beam, shackles, sling, etc...	1	250	250
Stationnary	Mechanic+ Electronic hardware			1000
Rack for electronic	Included circuit boards (SSC made)	1	4000	4000
Contengency	Included some extra pieces for other alignment purposes			9770
$ Gross total	No interferometer (To borrow from someone?)			65000

Anyone at LLNL? Reply required, please.

PRD/JPA - 1/5/93

Projective Alignment System Simulation (PASS)

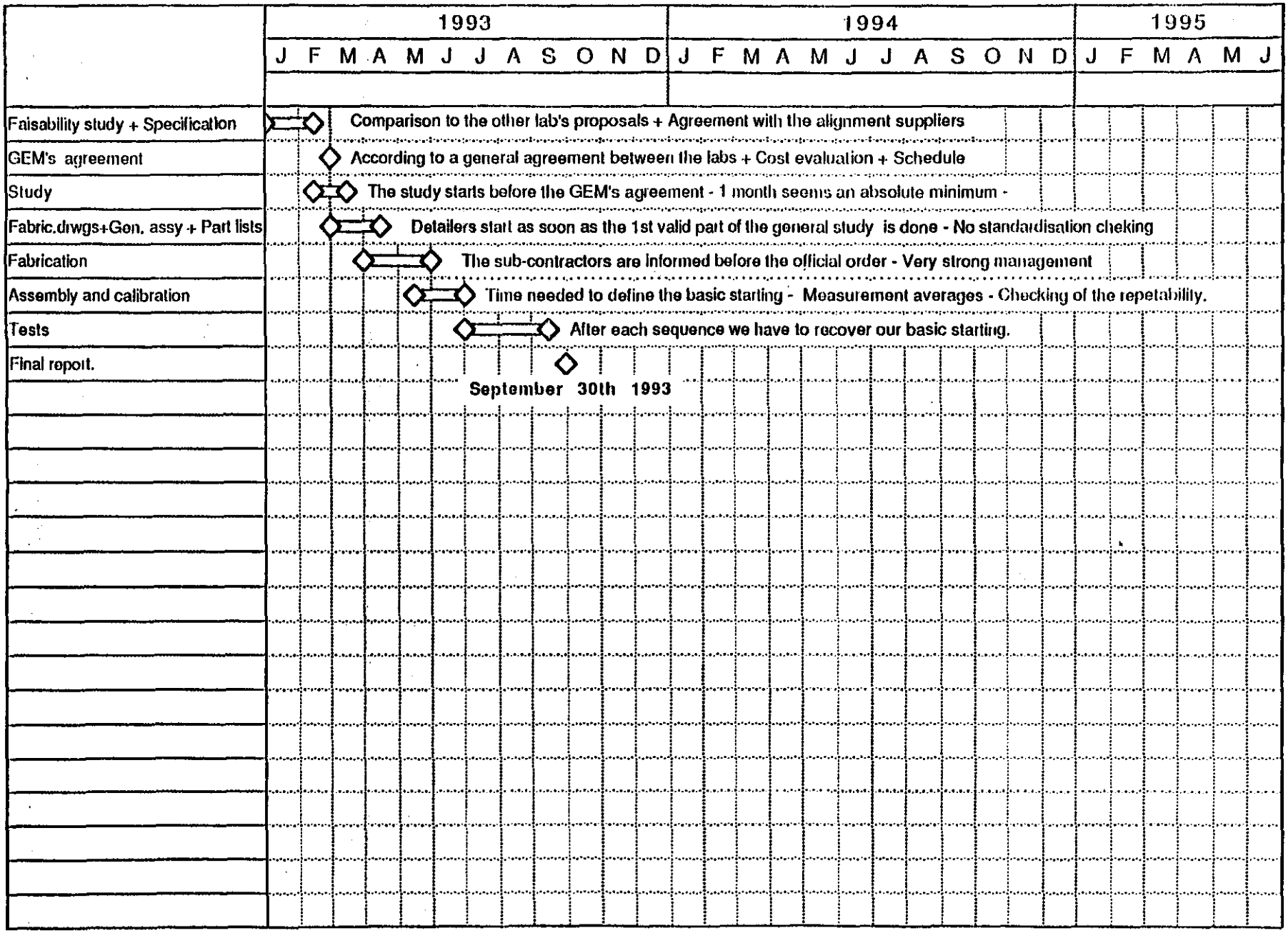

Wednesday, December 23, 1992

PASS
1st tower

Projective Alignment

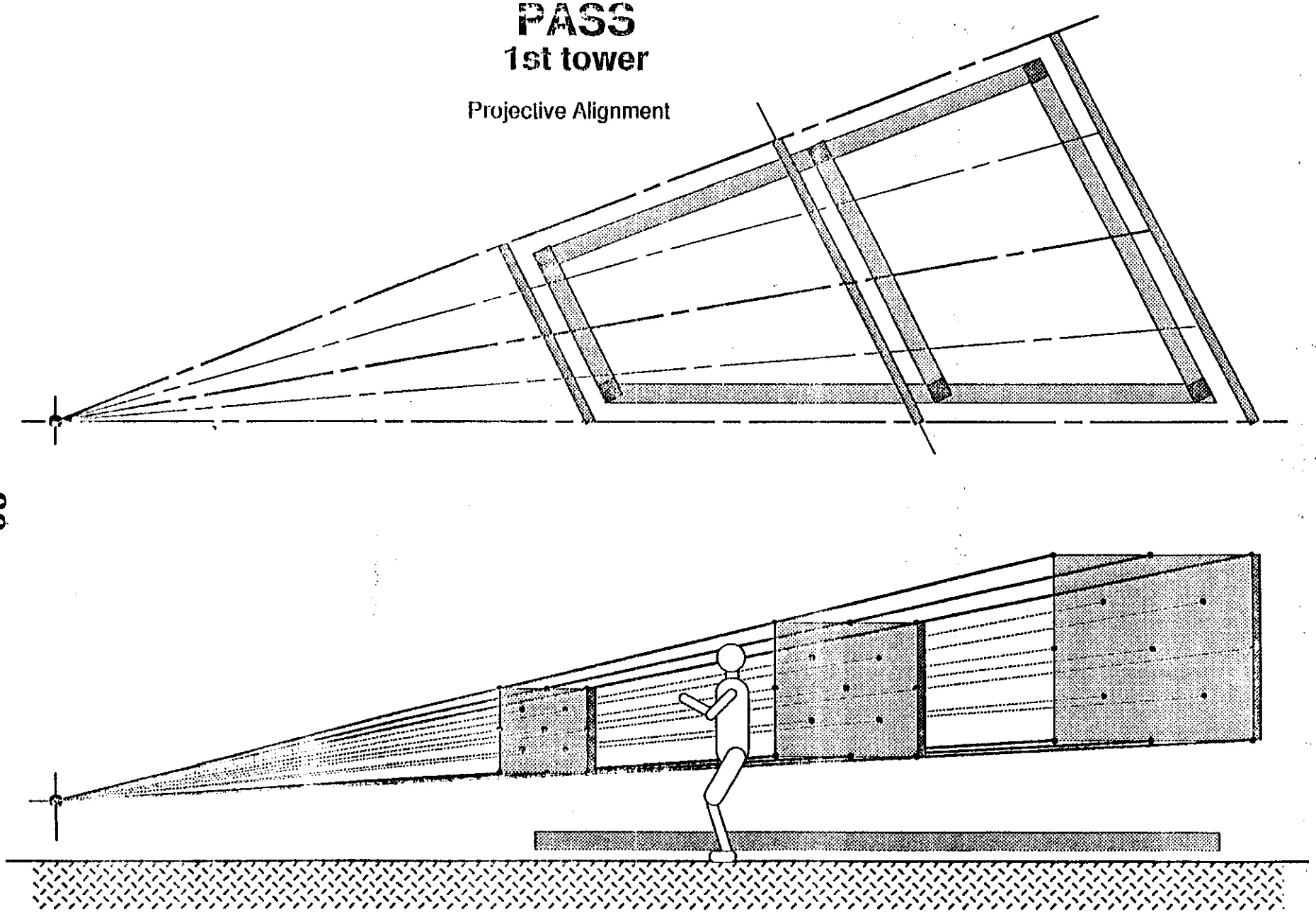

Heavy lines = For measures
Dot lines = Show tracks simulation.

PRD/JPA
1/3/93

PASS
1st tower

Temperature sensors

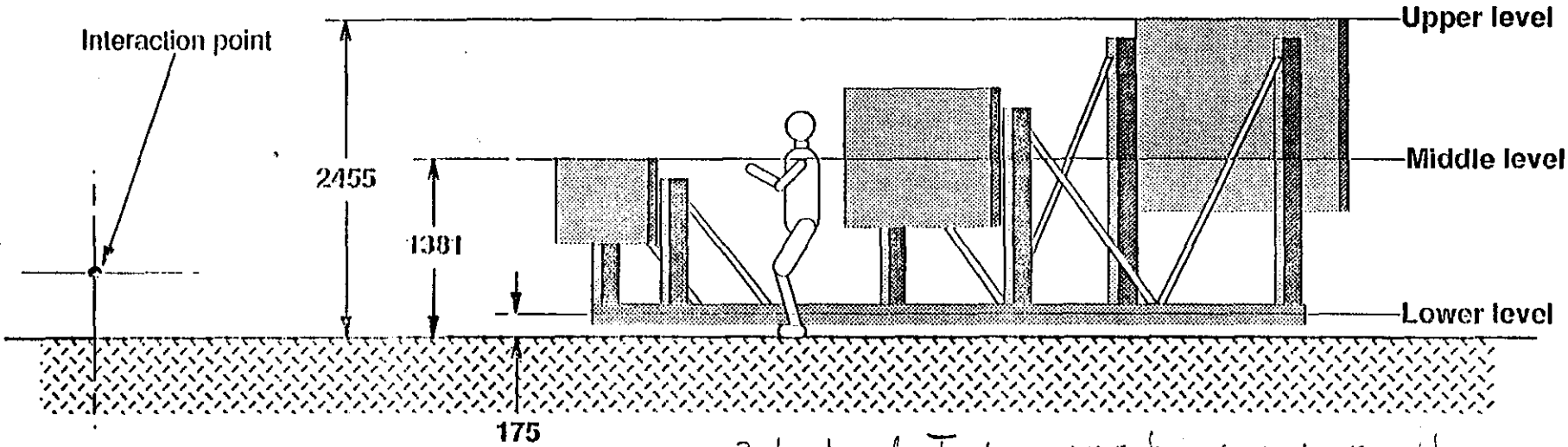

3 levels of Temp sensors because my assumption is 1°C every 2 m.

PRD/JPA
1/3/93

PASS
1st tower

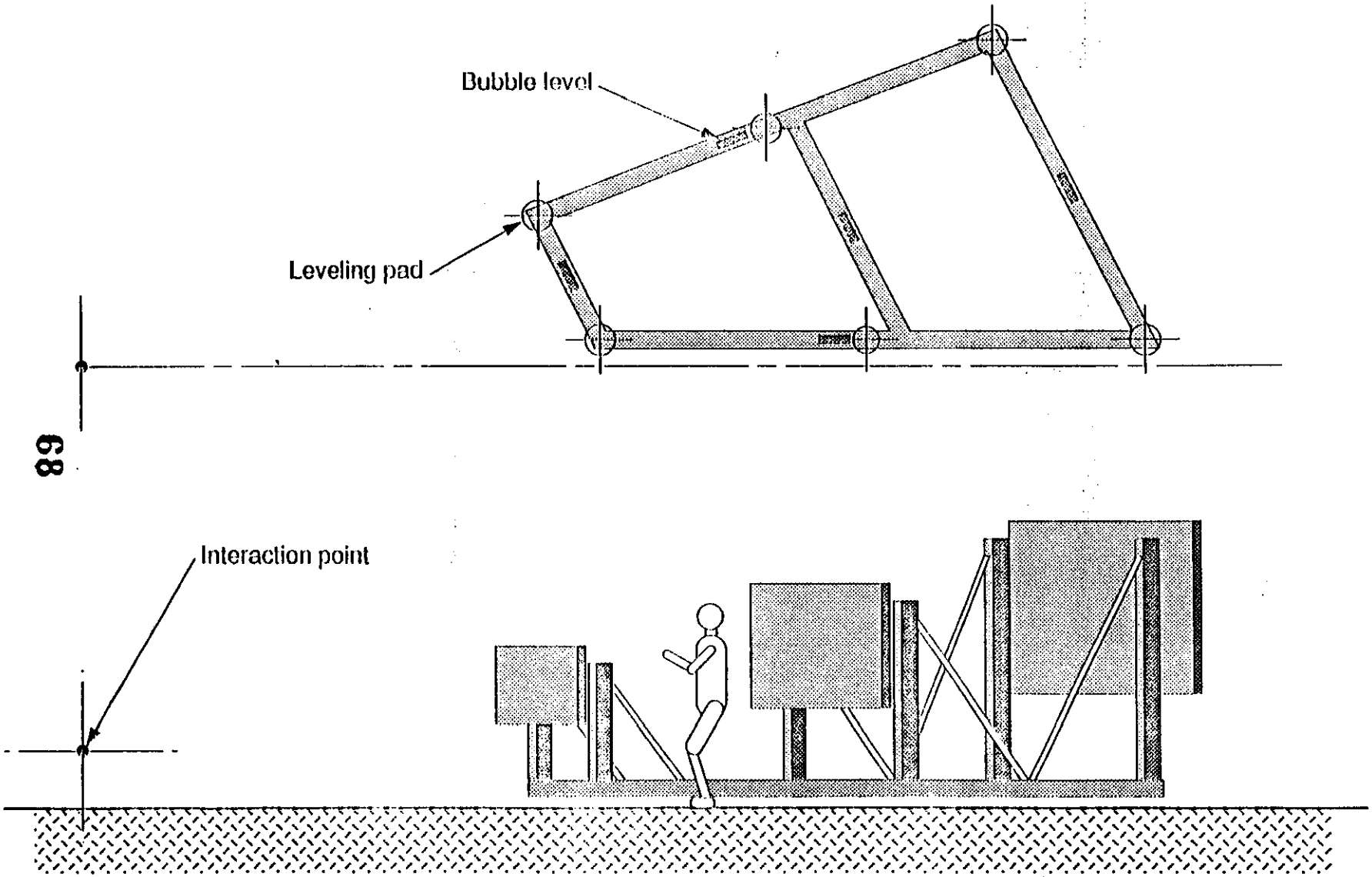

- Definition of the base stability
- Introduction of torque or bending of the entire tower.

PRD/JPA
1/3/93

Home made - Carbon fiber tube +

Tubular Inside Micrometers

No. 823 Series—*1½ to 40 inch*

No. 823M Series—*40 to 1000 mm (Metric)*

- SATIN-CHROME Finish on Head—No Glare, Rustite Rust
- Tubular Measuring Rods—Light Weight plus Extreme Rigidity
- Rods Attachable to Either or Both Ends of Head—Insures the Best Balance, Feel and Ease of Reading
- Each Rod Marked with Length
- Hardened and Ground Anvils on Rods, Adjustable for Length—Head Anvil Hardened and Ground
- One Piece Screw—With Hardened Threads Ground from the Solid and Stabilized
- Quick Reading Figures—Every Thousandth Numbered
- Quick, Easy Adjustment
- Lock Nut Furnished on One-inch Heads
- Convenient Handle Furnished on A, B, F Micrometers—Provides Correct Reach and Balance
- Interchangeable Anvils on Both ½" and 1" Heads

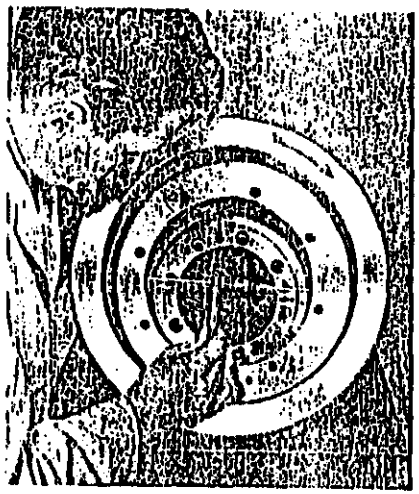

Checking the inside diameter of a deep hole in a housing with a Starrett No. 823 Inside Micrometer. Note the convenient handle attached to the center of the micrometer.

Cat. No.	EDP No.	Range	Movement of Screw	Description
			Graduation—.001"	
823AZ	53050	1½ to 8"	½"	With 6 measuring rods and handle
823BZ	53052	1½ to 12"	½"	With 8 measuring rods and handle
823CZ	53054	4 to 24"	1"*	With 7 measuring rods
823DZ	53055	4 to 32"	1"*	With 8 measuring rods
823EZ	53056	4 to 40"	1"*	With 10 measuring rods
823FZ	53058	1½ to 32"	½ and 1"* (2 heads)	With 10 measuring rods and handle
			Graduation—0.01 mm	
823MAZ	53051	40 to 200 mm	13 mm	With 6 measuring rods and handle
823MBZ	53053	40 to 300 mm	13 mm	With 8 measuring rods and handle
823MCZ	53057	100 to 1000 mm	25 mm*	With 10 measuring rods

*NOTE: 1" and 25 mm heads furnished with lock nut

Each Set Furnished in Attractive, Protective Case

Packed One in a Box

Fixed Range Inside Micrometers

824 Series—*2 to 12 inch*

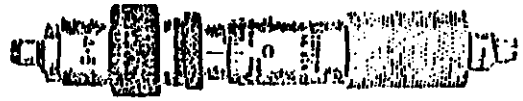

824B — 4 5 inch

824C — 5 6 inch

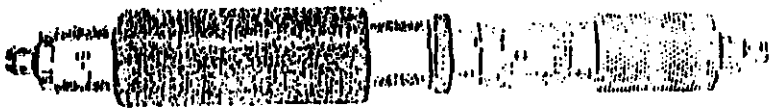

824D — 6 7 inch

For those who prefer inside micrometers without interchangeable rods, Starrett offers a series of fixed range inside micrometers. Thirteen individual micrometers are offered in ranges covering 2 to 12 inches. Four complete sets are also available offering ranges of 2 to 6 inches, 2 to 12 inches and 6 to 12 inches. All 824 series micrometers feature no glare satin chrome finish and lock nuts (except 824AA). Spindle threads are hardened, ground from the solid and stabilized. Insulating handles on all sizes minimize possible expansion by heat when hand held. All sets are furnished in an attractive, protective case.

SPECIFICATIONS:

Cat. No.	EDP No.	Range	Movement of Screw
824AA	56665	2 to 3"	1"
824A	56666	3 to 4"	1"
824B	56667	4 to 5"	1"
824C	56668	5 to 6"	1"
824D	56669	6 to 7"	1"
824E	56670	7 to 8"	1"
824F	56671	8 to 9"	1"
824G	56672	9 to 10"	1"
824H	56673	10 to 11"	1"
824J	56674	11 to 12"	1"
824K	56675	6 to 8"	2"
824L	56676	8 to 10"	2"
824M	56677	10 to 12"	2"

Packed One to a Box

SPECIFICATIONS SETS:

Cat. No.	EDP No.	Total Range	Description
824AZ	56678	2 to 6"	with 4 micrometers, 1" range 2 to 3", 3 to 4", 4 to 5", 5 to 6"
824BZ	56679	2 to 12"	with 10 micrometers, 1" range 2 to 3", 3 to 4", 4 to 5", 5 to 6", 6 to 7", 7 to 8", 8 to 9", 9 to 10", 10 to 11", 11 to 12"
824BCZ	56680	6 to 12"	with 3 micrometers, 2" range 6 to 8", 8 to 10", 10 to 12"
824DZ	56681	2 to 12	with 7 micrometers 4 with 1" range 3 with 2" range 2 to 3", 3 to 4", 4 to 5", 5 to 6", 6 to 8", 8 to 10", 10 to 12"

Each Set Furnished in Attractive, Protective Case

Packed One Set Per Case

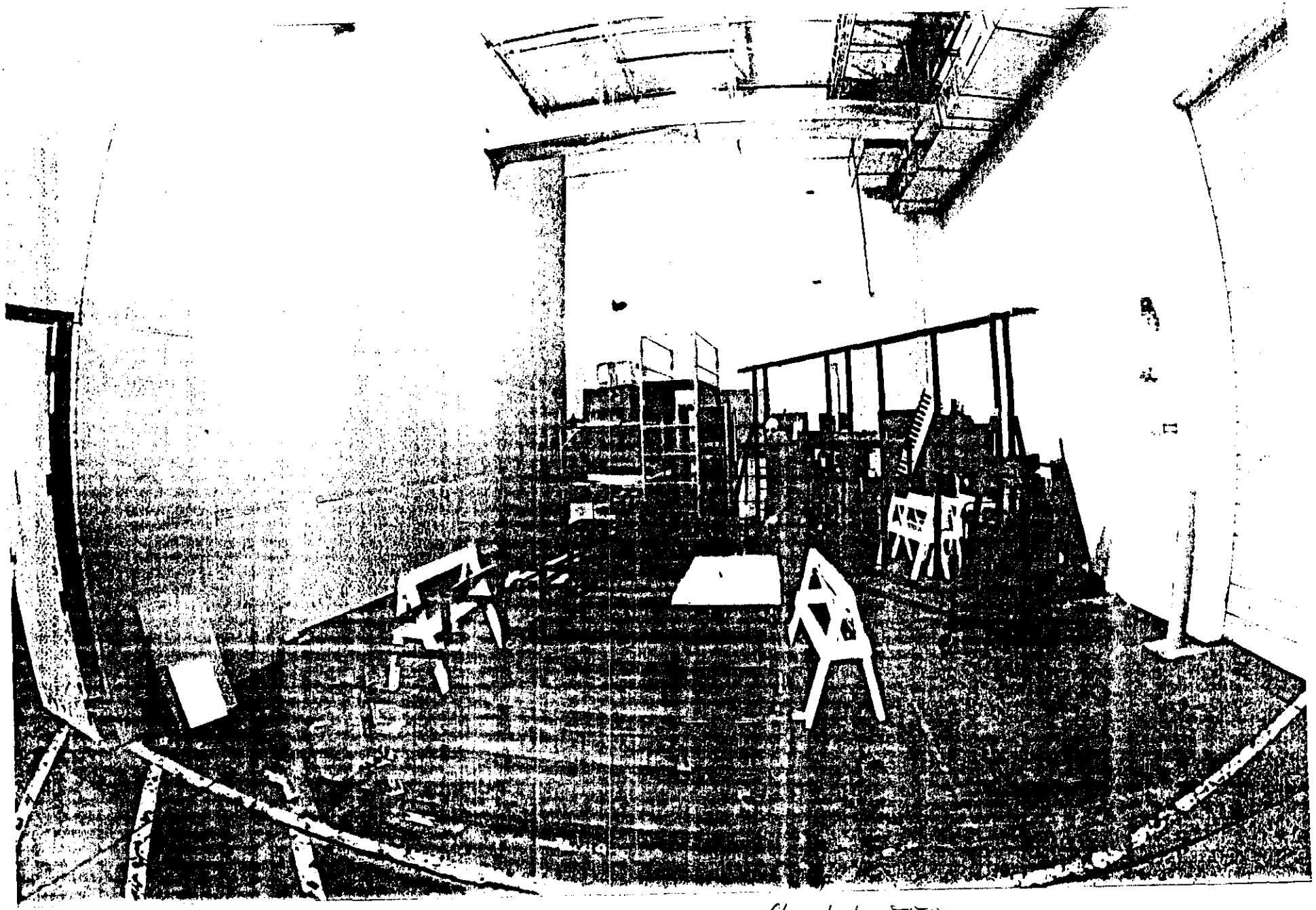

Closed to TTR
7,25 x 12 m
Big enough for 1st barrel tower only

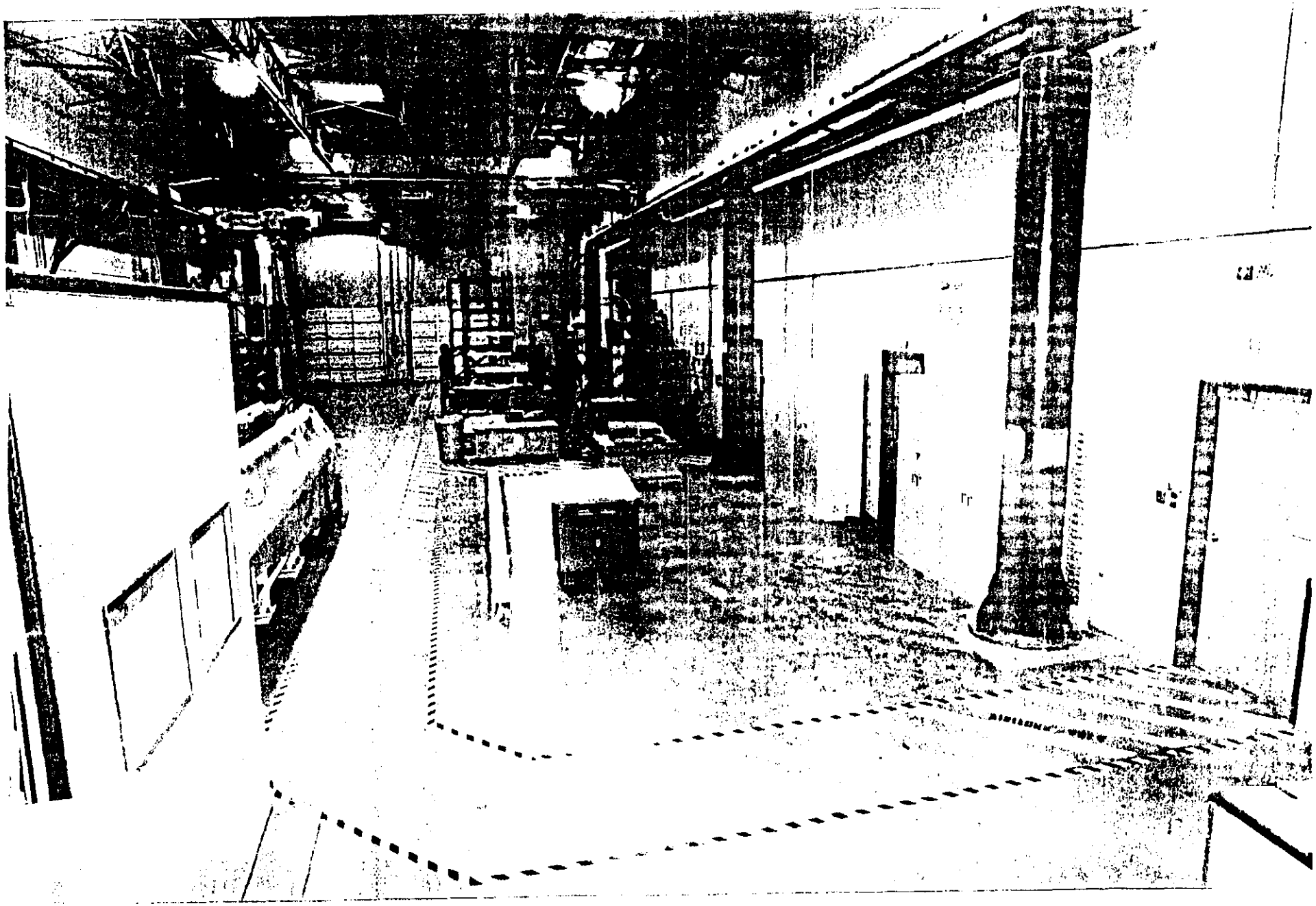

The dream !!!
Crane included.

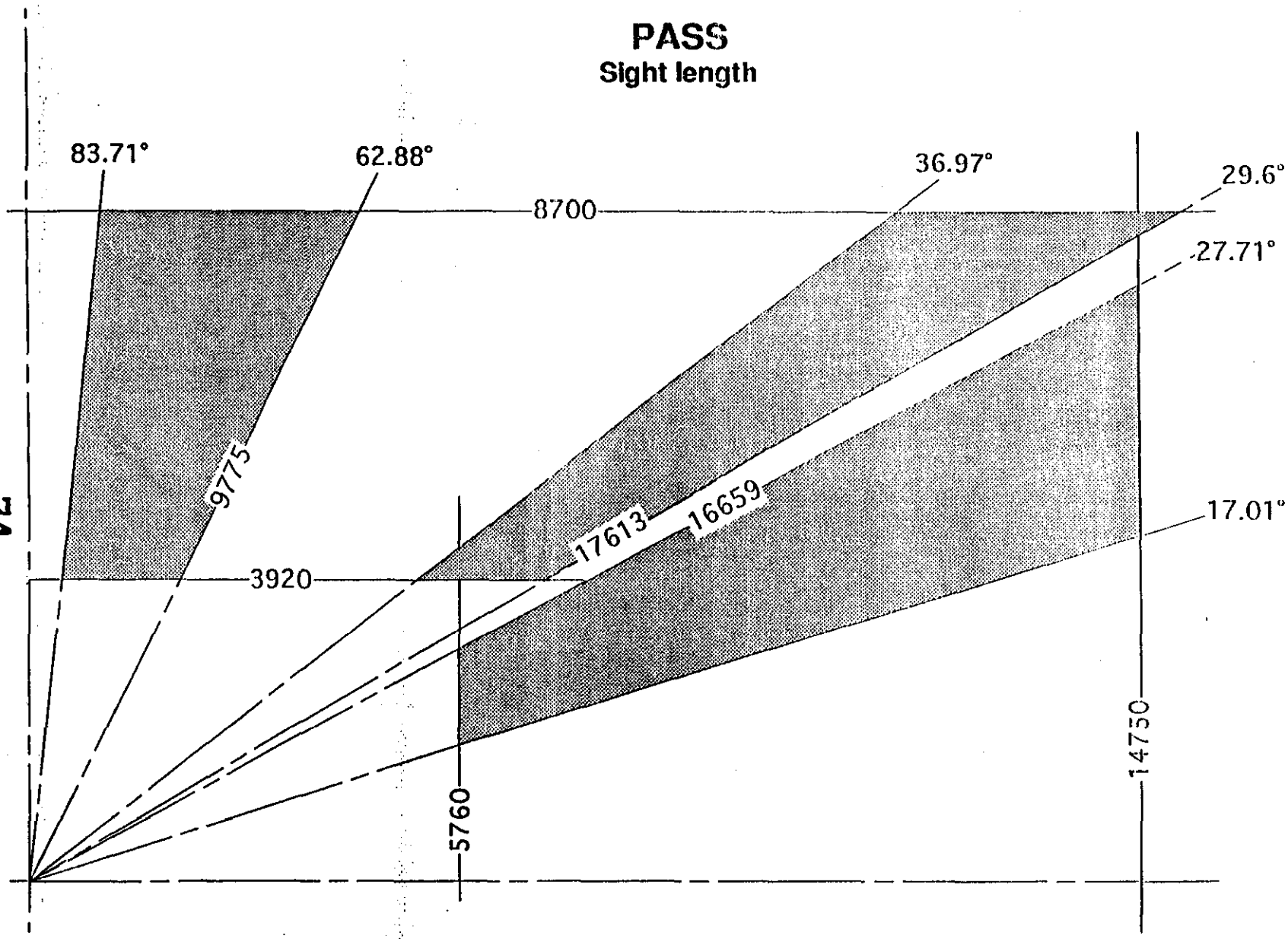

PRD/JPA
12/27/92

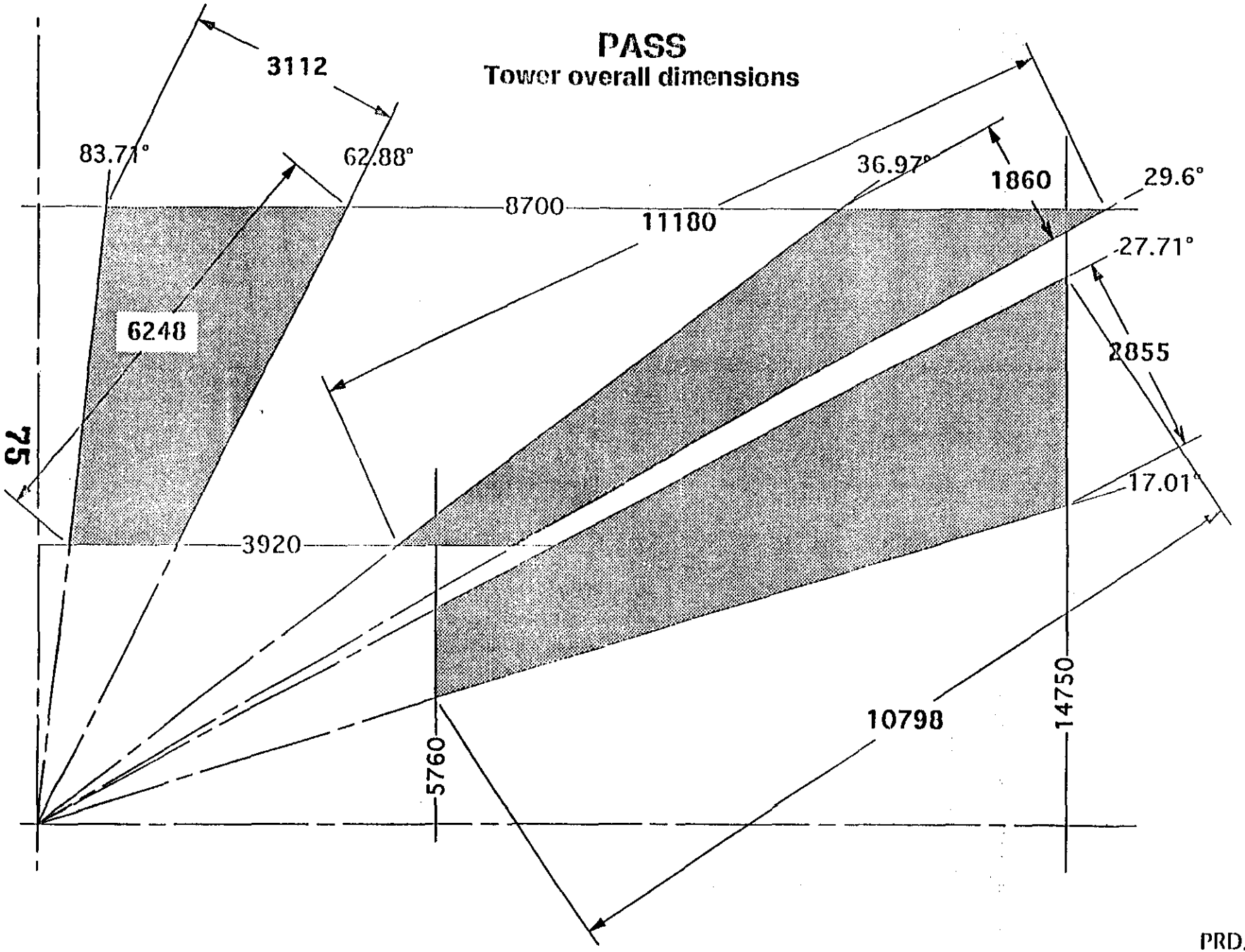

PRD/JPA
12/27/92

PASS
1st tower

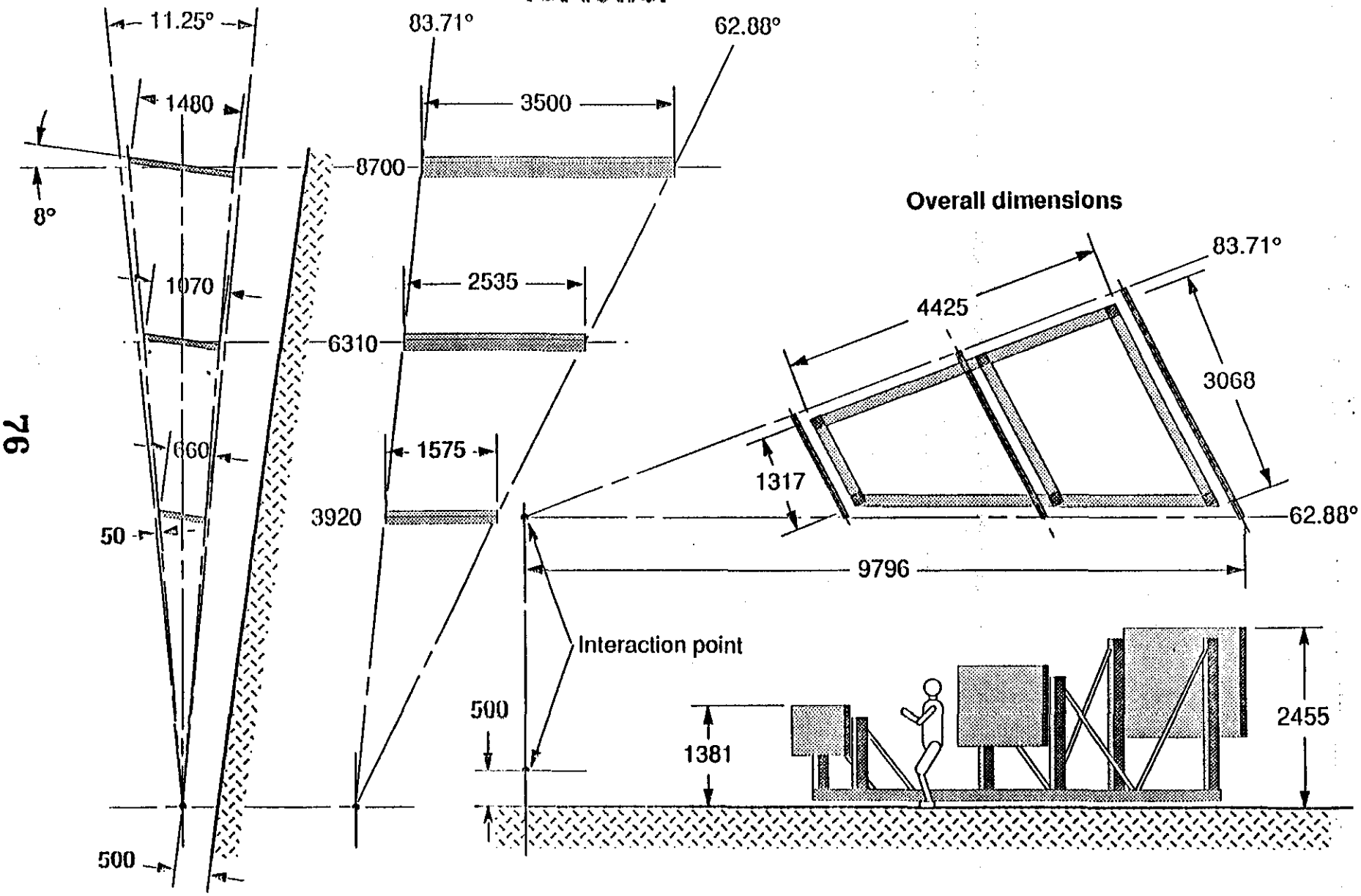

PRD/JPA
1/3/93

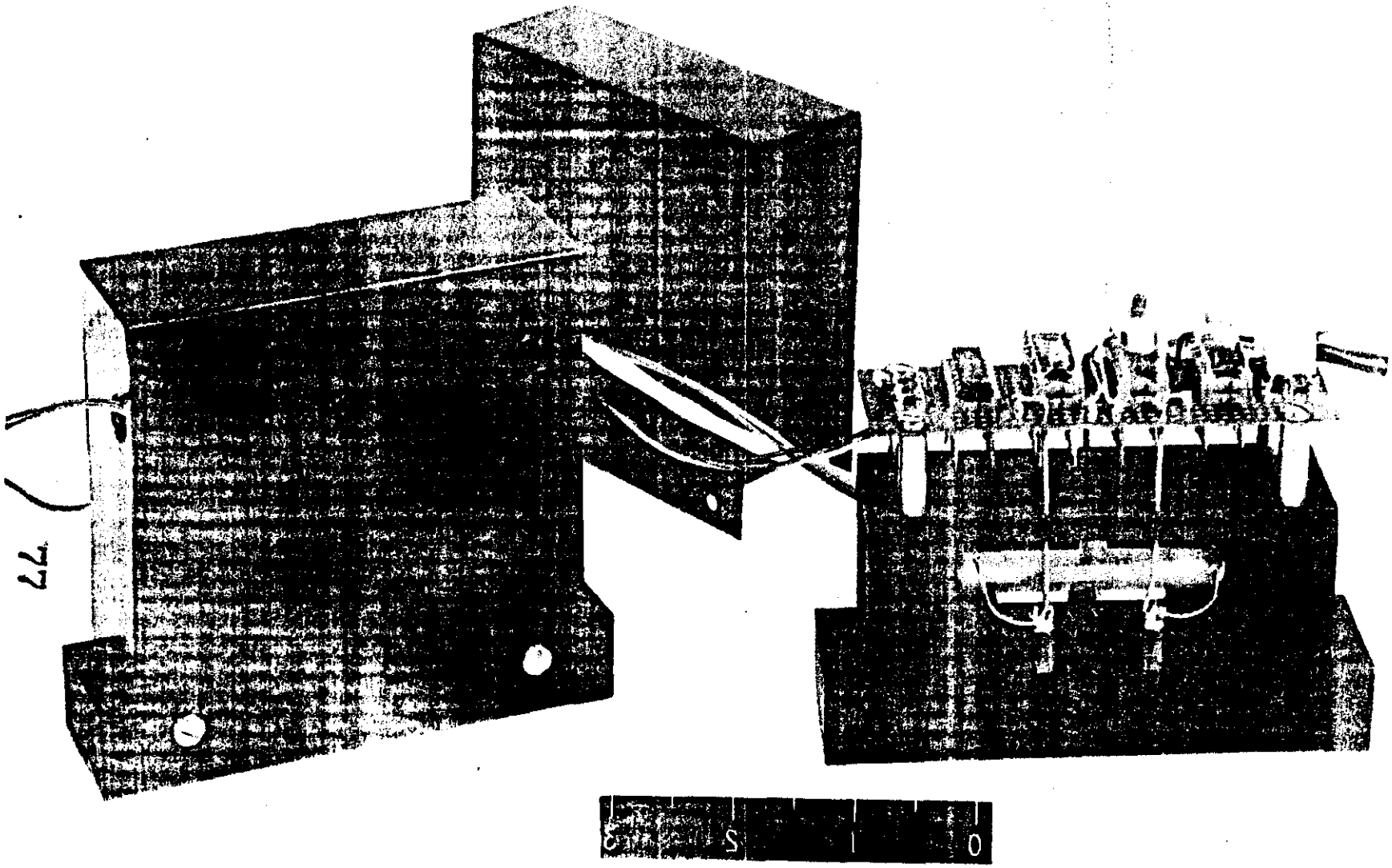

Electr. bubble level developed by DRAPER
for L3.
2 mV = 1 μrad.

1 available right now
2 in the middle of 88

Wild THEOMAT™ T3000

Electronic precision theodolite

NEW

Main features

- Highest angle-measuring accuracy
- Automatic compensation of all axis errors
- Two-axis compensator
- Panfocal telescope with optional autocollimation eyepiece
- Plug-in REC data-storage module
- Colour-coded keyboard
- Mathematical coordinate-geometry functions
- On-line control by computer
- T3000 = T3A + T2000S

Applications

- Deformation monitoring in civil engineering structures
- Industrial surveying tasks in the automotive and aerospace industries
- Satellite and antenna construction
- First-order triangulation

Highest angle-measuring accuracy

Further development of dynamic angle scanning has scored another first. The standard deviation for an azimuth measured in both telescope positions is now only 0.5" (0.00015gon). This performance makes the T3000 the perfect instrument wherever measurements of the highest accuracy are required.

Full correction of all axial errors

Automatic correction of the Hz collimation error, V index error, and transverse tilt error of the tilting axis. The correction values are stored in the non-volatile memory until reset after being determined again.

Switchable two-axis compensator

The liquid compensator corrects the effect of standing-axis tilt on readings of the horizontal and vertical circles. The compensator has a large effective range and can be inactivated by keyboard or software command.

Example of Survey Reference Pin for angle observations

DV 18 May

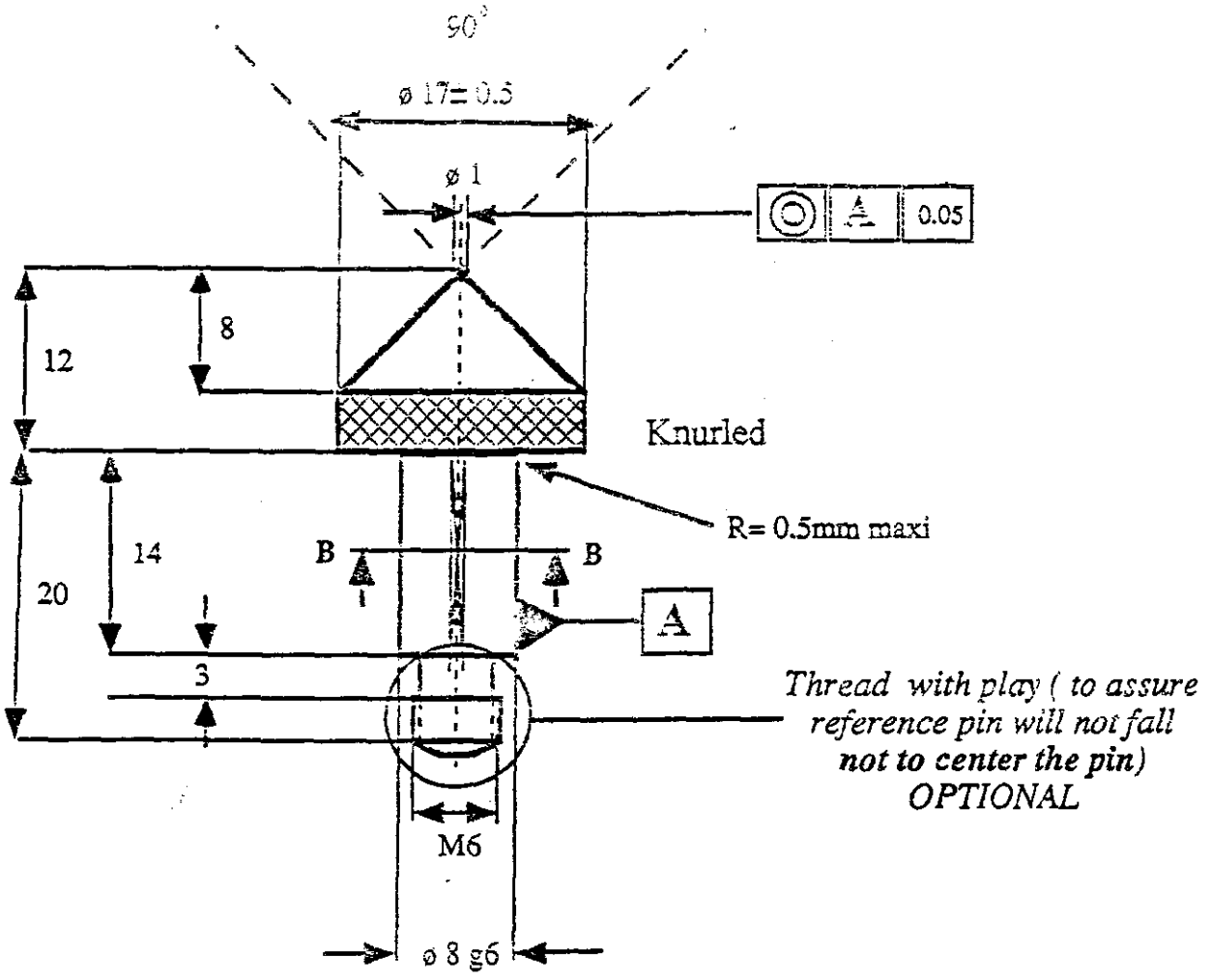

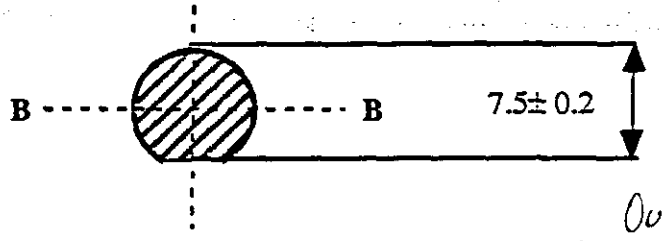

ø 8 g6 - diameter dimension tolerance 7.980-7.995mm

All parameters in millimetres

Our survey team (coming from LEP) claim that they could define a point in a sphere of 100 μm if they have 5 m available around the tip.

PASS
1st tower

Survey Network Monuments

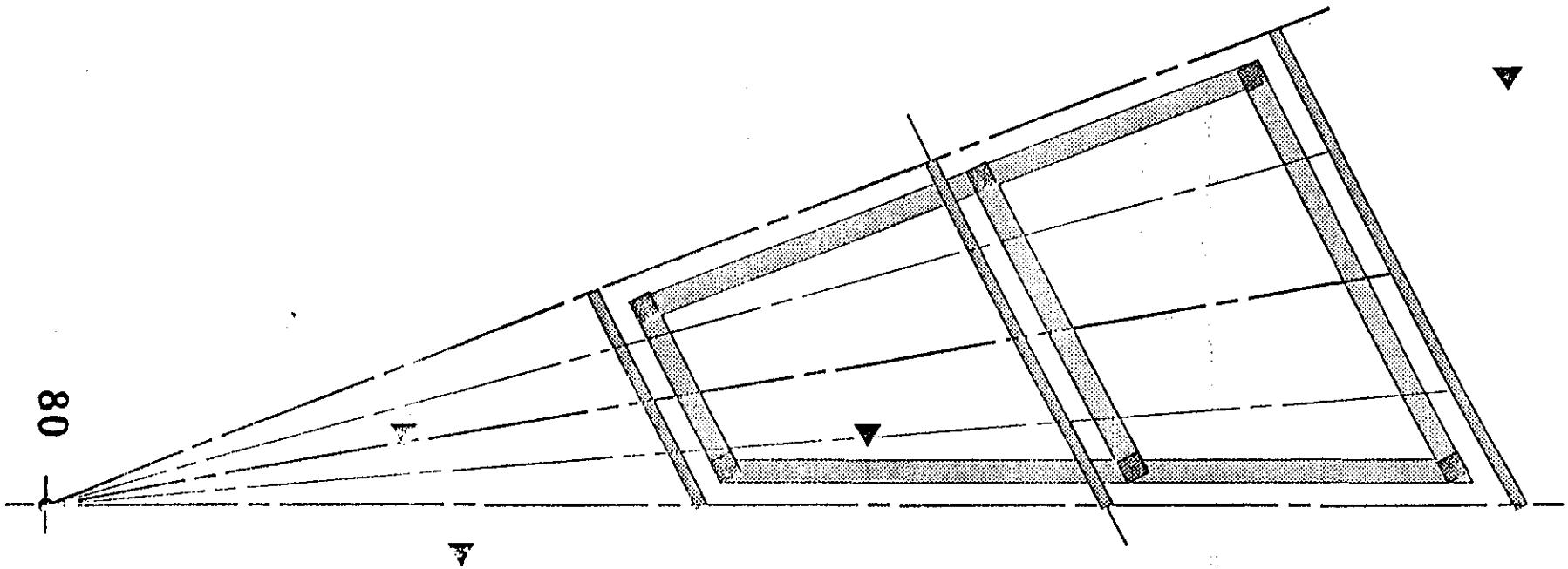

PRD/JPA
1/3/93

PASS
OUTER CHAMBER

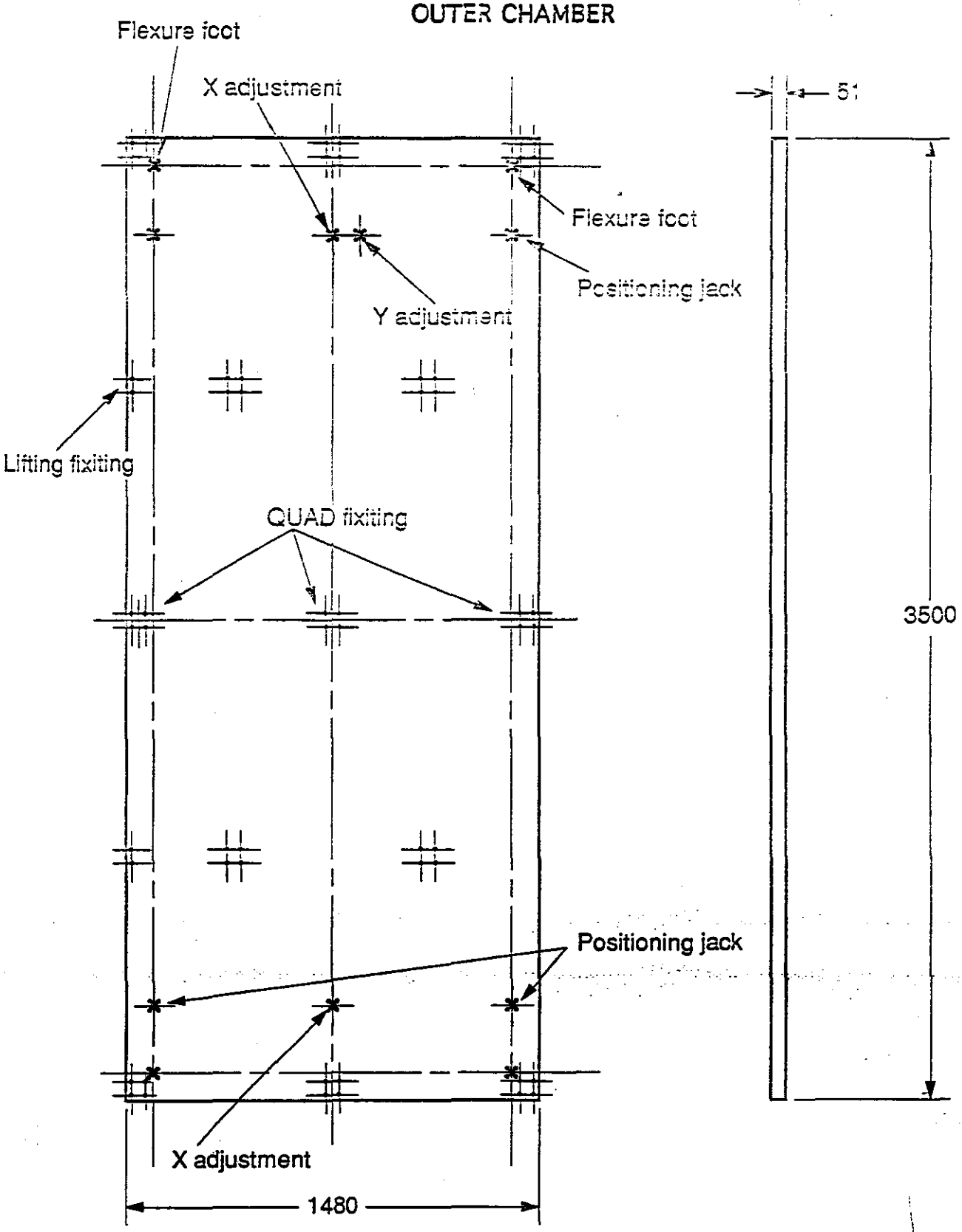

PRD/JPA
1/6/93

PASS

X-Y adjustment

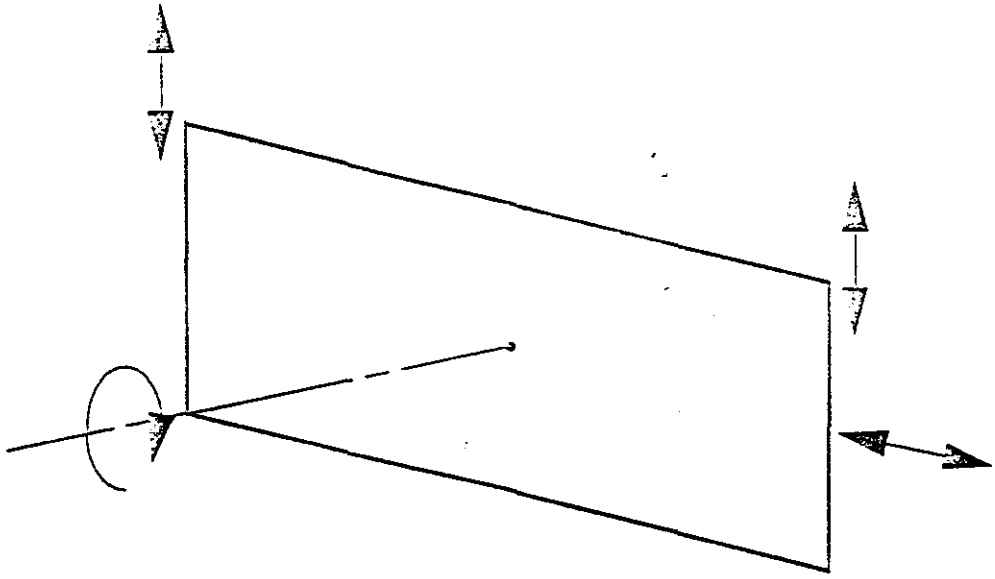

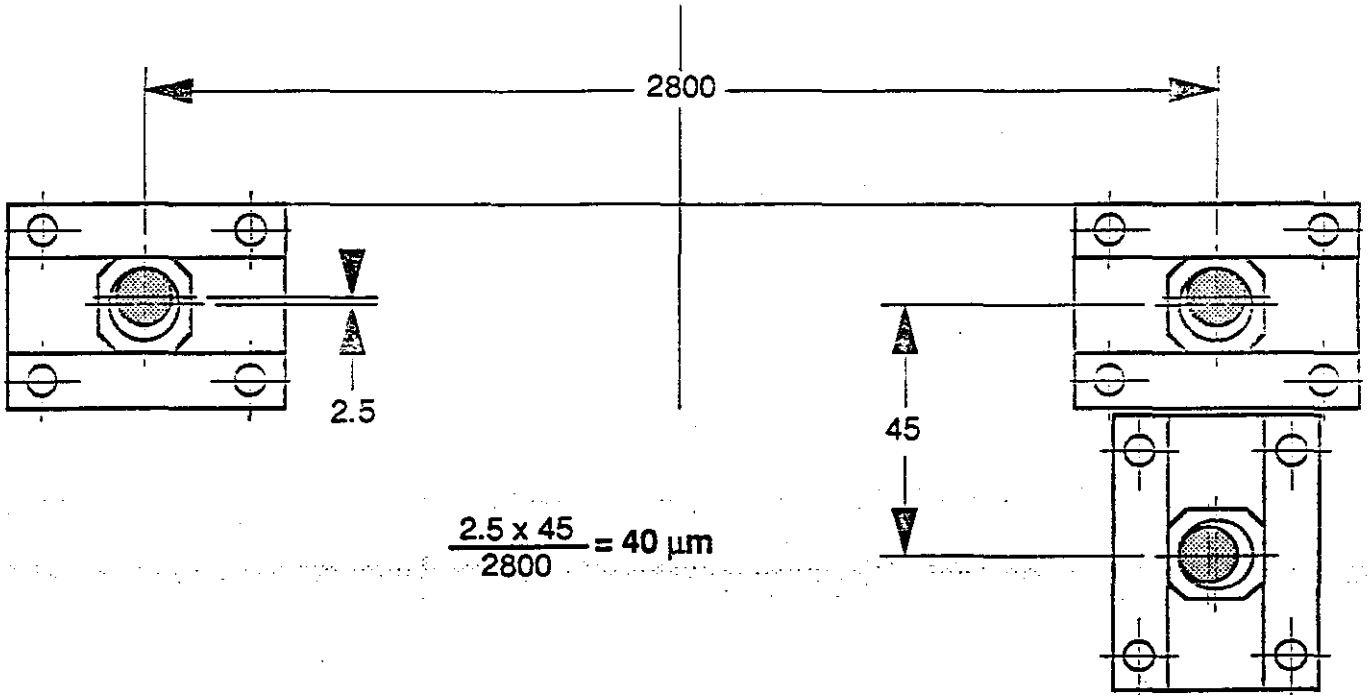

$$\frac{2.5 \times 45}{2800} = 40\ \mu m$$

PRD/JPA
1/6/93

PASS
Stand foot - Top view

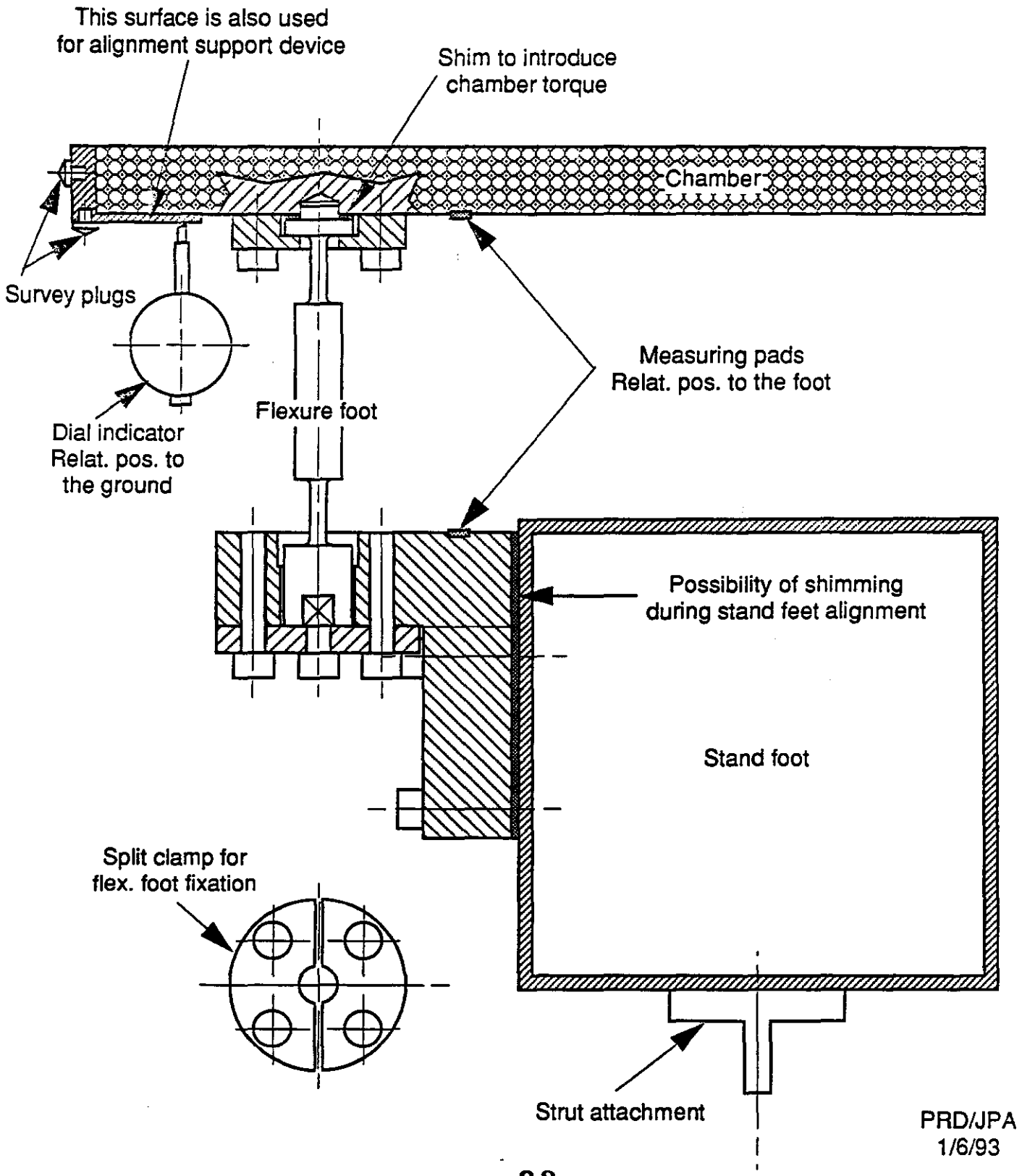

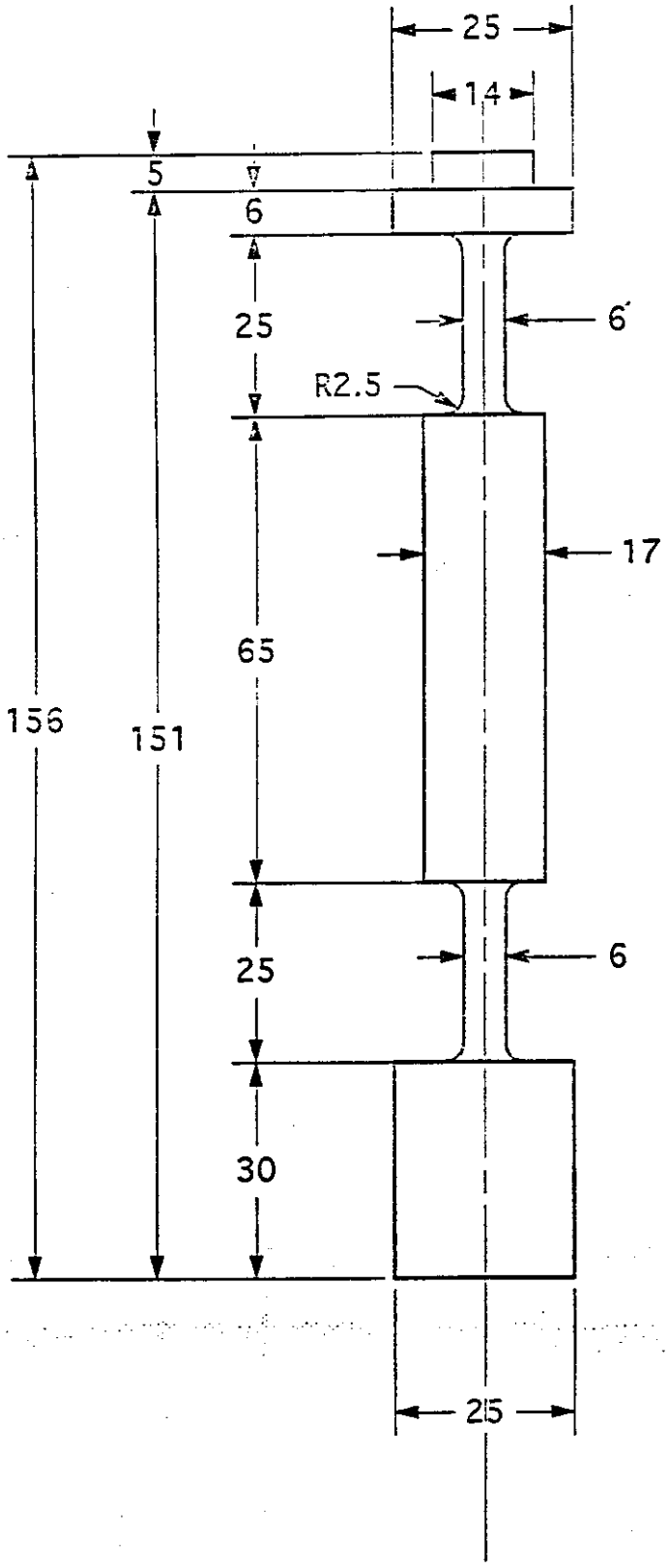

Material : Spring SS

PASS
Flexure foot

PRD/JPA
12/21/92

MUON CHAMBER FLEXURE FOOT FINITE ELEMENT STRESS ANALYSIS

Objective: Determine the suitability of the J. Pier-Amory flexure foot design for use in muon chamber alignment tests.

Requirements: Given design must accomodate a flexural cone of 5 mm maximum radius without being stressed in excess of its material's elastic limit.

Materials: Type 316 stainless spring steel (SAE 30316) was selected because of its 1.4 GPa elastic limit, availibility, and cost.

Finite Element Model / Analysis: 52 nodes, comprising 51 six degree-of-freedom elements were used. The bottom most node was encastre while the tip received a variable perpendicular static force.

Results: A maximum bending stress of 1.12GPa, representing 80% of the elastic limit of the chosen material, was produced by a 5 mm tip deflection. This was accomplished by a 20 kgf load application.

Conclusion: The flexure foot designed by J. Pier-Amory is suitable for use in the muon chamber alignment tests without modification.

M. Gamble
3 January 1993

PASS
INSTALLATION JACKS

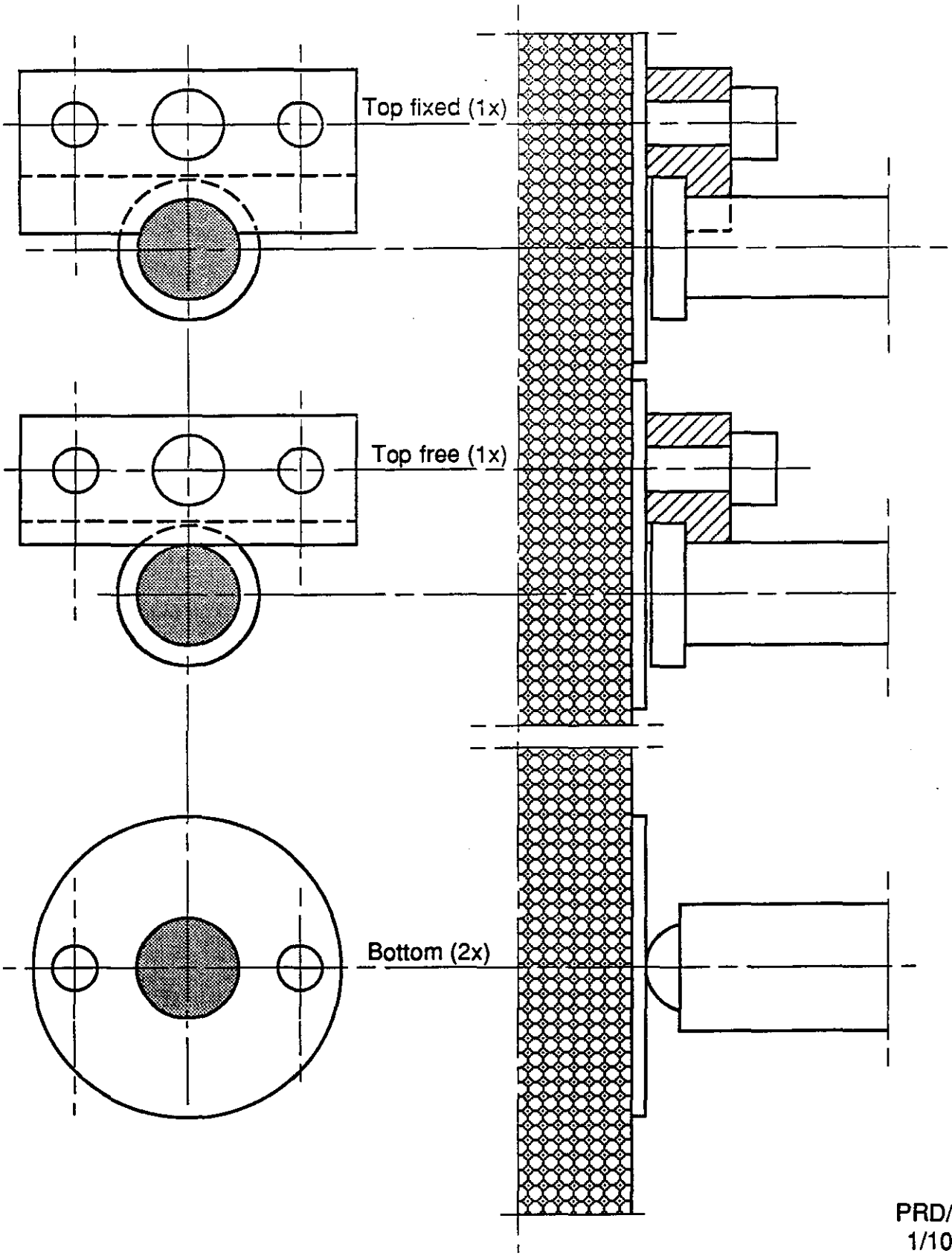

PRD/JPA
1/10/93

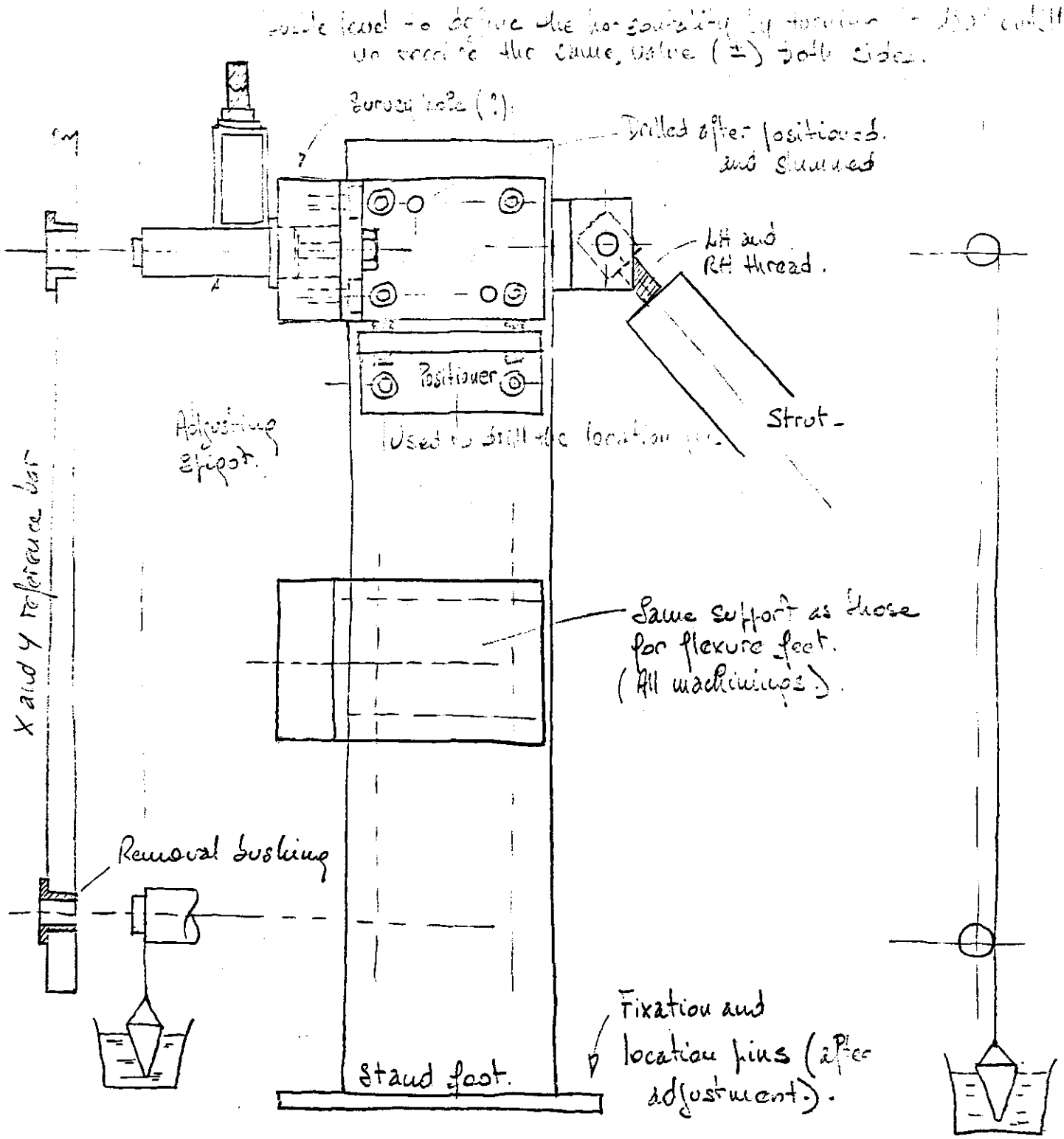
Drilled after positioned and slumped
LH and RH thread.
Positioner
Strut
Adjusting spigot.
Same support as those for flexure feet. (All machinings).
X and Y reference bar
Removal bushing
Fixation and location pins (2 for adjustment).
Stand foot.

PASS

We have here, at SSCL the physicists who developped the mathematic model.

We have here, at SSCL the manpower to study, to achieve the drawings, to supervise the fabrication, to assemble, and to calibrate the rig.

We have here, at SSCL the contact with other firms or labs to supply us with the optical devices required for the rig (Excepted the interferometer).

We have here, at SSCL the available space to realize entirely the tests.

Conclusion : The SSCL is the most advisible place to achieve the job at the cheapest costs.

PRD/JPA
12/28/92

R&D Program of Alignment Technology at Tsinghua University

Li Da Cheng

R & D Program of Alignment Technology at Tsinghua University

Li Da Cheng

Department of Precision Instruments
Tsinghua-SSCL GEM Collaboration
Tsinghua University, Beijing, P.R.China
FAX (861)-2568116
Jan.10,1993

1. R & D of Cube CCD Detector:(in China)

✓ 1.1. Principle experiment for CCD detector with light spot in one dimension displacement.

1.2. Principle experiment for CCD detector with light spot in two dimension displacement.

1.3. Making an experimental prototype of cube CCD detector.
The work mentioned above will be done in July.20, 1993, if recieve fund from U.S. in April,1. 1993.

2. Visiting U.S. Lab concerning alignment technology of muon system.To disscuse local and global alignment,To disscuse the interface of cube CCD detector with LED/LENS system, support structure and chamber for making cube CCD detectoor. Professor Li would visit SSC 2-3 weeks

3. Attending demonstration of cube CCD detector prototype with LED/LENS,support structure and chambers (in U.S.A) After July 20

4. Attending global alignment evaluation and proposing global alignment procedure and monitoring system.(in China and U.S.A.)

5. Simulate operation of complete system.

6. Budget:
Experimental cost; labour cost, international trip and living expenses in U.S U.S.D. 50K.

Discription of FY93 Budget for Alignment
(Tsinghua University)

1.	Procurement of materials and electronical elements	USD 8K
2.	Optics and electronics fabrication	USD 10K
3.	Manpower for experiment	8K
4.	Miscellaneous	4K
5.	Study visiting to U.S (one month for two persons) '93 Spring.	8K
6.	Demonstration of cube CCD detector; Global alignment evaluation and proposal. '93 Fall.	12K
	Total	USD.50K

Yu, Guan Zheng

Principle Experiment for Cube CCD Detector--One Dimension Measurement

Li Dacheng, Wang Jia, Zhao Yang, Cao Mang

Department of Precision Instruments
Tsinghua-SSCL GEM Collaboration
Tsinghua, Beijing P.R.China

FAX(861)-2568116
Jan.10, 1993

A series of princile experiments for proving the theortical vilidation and displacement measurement accuracy of Cube CCD Detector has been conducted in the Dept. of Precision Instruments, Tsinghua University.

The Cube CCD Detector is a pricise, large dynamic range sensor used in LED/LENS system proposed by us in Oct.17.1992.

1. Experimental Setup

Light source: Halogen lamp or LED
CCD detector: Toshiba, 2048 pixels
CCD driver & processor: made in China
Digital linear displacement sensor & display:--HEIDENHAIN, Germany
range:30mm
resolution:1μm
Stage: two dimension stage
range:50mm

Computer: IBM/PC XT
Software: developed in the Laboratory.

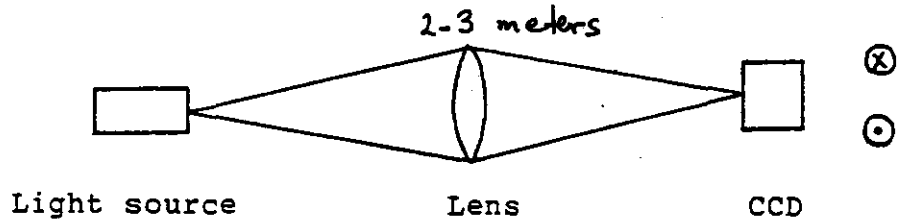

Fig. 1

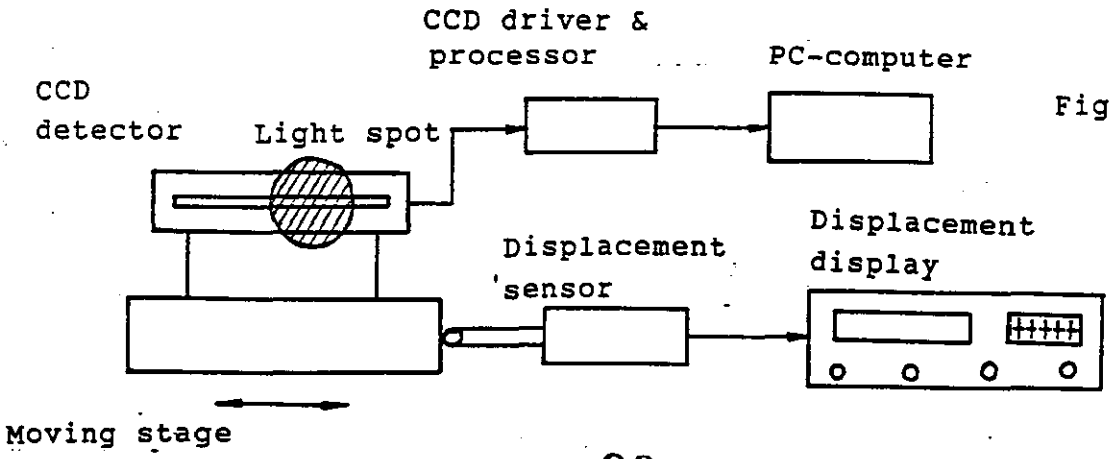

Fig. 2

II. Experiment

A Every step displacement: 0.500mm
calibrited with the Digital linear displacement sensor & display.

B. Five groups of data were picked up on every step.

C. travel range :10.000mm

D. 105 groups data were calculated & evaluated on the computer in one experiment.
measurement accuracy is verified in the case of CCD displacement.

G. Light spot has to be uniform intensity and sharp edge.

III. Experimentel Results (see appendix)

IV. Conclusion

A. One dimension measurement show that the sensor is valid and utilizable in principle.

B. The accuracy in the experiments is less than 10μm except 1-2 points, and will be better with the measurement system made caretully in the further experiments.

C. One dimension result can be extended to two dimension.

Appendix 1

A. Halogen lamp light spot centered

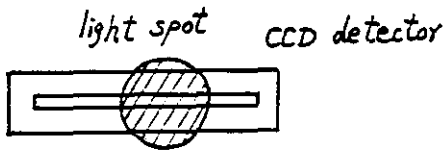

DataFileName: std

Standard Readings		CCD Readings		Position Error	
0.000	mm	4.622	mm	0.000	mm
0.500	mm	5.124	mm	0.003	mm
1.000	mm	5.628	mm	0.006	mm
1.500	mm	6.123	mm	0.001	mm
2.000	mm	6.629	mm	0.007	mm
2.500	mm	7.123	mm	0.001	mm
3.000	mm	7.626	mm	0.004	mm
3.500	mm	8.118	mm	-0.004	mm
4.000	mm	8.622	mm	0.000	mm
4.500	mm	9.120	mm	-0.002	mm
5.000	mm	9.624	mm	0.003	mm
5.500	mm	10.122	mm	0.000	mm
6.000	mm	10.628	mm	0.006	mm
6.500	mm	11.126	mm	0.004	mm
7.000	mm	11.626	mm	0.005	mm
7.500	mm	12.123	mm	0.002	mm
8.000	mm	12.626	mm	0.004	mm
8.500	mm	13.123	mm	0.001	mm
9.000	mm	13.636	mm	0.014	mm
9.500	mm	14.122	mm	-0.000	mm
10.000	mm	14.622	mm	0.000	mm

Presss ENTER to continue

Appendix 2

B. Light spot Offset

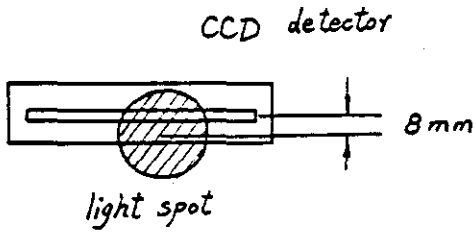

DataFileName: stc

Standard Readings		CCD Readings		Position Error	
0.000	mm	5.089	mm	0.000	mm
0.500	mm	5.579	mm	-0.010	mm
1.000	mm	6.080	mm	-0.009	mm
1.500	mm	6.580	mm	-0.009	mm
2.000	mm	7.082	mm	-0.007	mm
2.500	mm	7.583	mm	-0.006	mm
3.000	mm	8.080	mm	-0.008	mm
3.500	mm	8.580	mm	-0.009	mm
4.000	mm	9.091	mm	0.003	mm
4.500	mm	9.578	mm	-0.011	mm
5.000	mm	10.073	mm	-0.016	mm
5.500	mm	10.569	mm	-0.019	mm
6.000	mm	11.077	mm	-0.011	mm
6.500	mm	11.567	mm	-0.021	mm
7.000	mm	12.073	mm	-0.016	mm
7.500	mm	12.571	mm	-0.017	mm
8.000	mm	13.078	mm	-0.011	mm
8.500	mm	13.576	mm	-0.013	mm
9.000	mm	14.078	mm	-0.011	mm
9.500	mm	14.578	mm	-0.011	mm
10.000	mm	15.079	mm	-0.009	mm

Presss ENTER to continue

Appendix 3

C.LED light spot.

DataFileName: ledf

Standard Readings		CCD Readings		Position Error	
0.000	mm	4.019	mm	0.000	mm
0.500	mm	4.533	mm	0.014	mm
1.000	mm	5.035	mm	0.016	mm
1.500	mm	5.524	mm	0.005	mm
2.000	mm	6.032	mm	0.013	mm
2.500	mm	6.527	mm	0.008	mm
3.000	mm	7.026	mm	0.007	mm
3.500	mm	7.528	mm	0.009	mm
4.000	mm	8.028	mm	0.009	mm
4.500	mm	8.523	mm	0.004	mm
5.000	mm	9.026	mm	0.006	mm
5.500	mm	9.521	mm	0.002	mm
6.000	mm	10.018	mm	-0.001	mm
6.500	mm	10.521	mm	0.002	mm
7.000	mm	11.021	mm	0.002	mm
7.500	mm	11.522	mm	0.003	mm
8.000	mm	12.015	mm	-0.004	mm
8.500	mm	12.516	mm	-0.003	mm
9.000	mm	13.017	mm	-0.003	mm
9.500	mm	13.525	mm	0.006	mm
10.000	mm	14.019	mm	0.000	mm

Presss ENTER to continue

Appendix 4

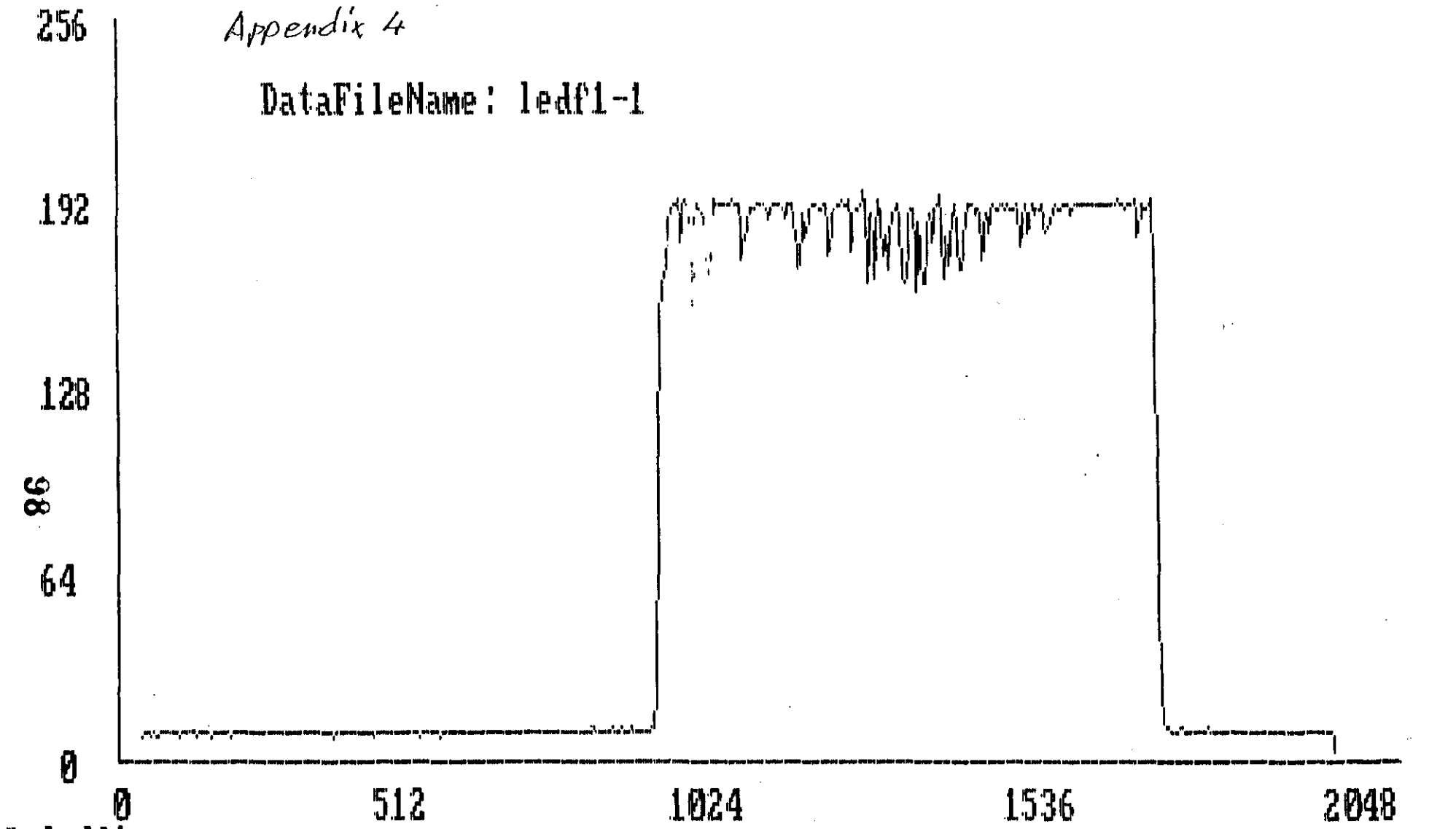

? ledf1-
? ▌

Intensity distribution of Led light spot