GEM TN-93-325

Mold Press for GEM Electromagnetic Calorimeter

Steve Bellavia
Brookhaven National Laboratory

May 18, 1993

Abstract

The mold and press are an integrated design. Both the barrel and end cap absorber and signal electrode plates are formed in the mold press. The plates, which have the basic accordion shape from the bending machine, are placed into the mold where heat and pressure are applied. The mold geometry is consistent with that of the plate at the forming temperature, which differs from that during the cryogenic operating condition due to thermal deflection. The mold is an aluminum alloy, chosen for strength, good conductivity and low thermal capacitance. It is coated with a easy removal of excess epoxy and adhesives which may ooze out during molding. The mold is heated and cooled according to a prescribed temperature and time characteristic required by the pre-pregs and adhesives in the absorber and signal electrodes respectively. The heating and cooling is achieved through oil which is ported through the mold. The pressure is applied simultaneously via the hydraulic press.

TN-993-325

Mold Press for GEM Electromagnetic Calorimeter

Steve Bellavia, BNL
Yin Au Nevis
May 18, 1993

TABLE OF CONTENTS

1.0 Introduction

2.0 Molds, Design & Fabrication
- 2.1 Geometry Definition
- 2.2 Materials
- 2.3 Detailed Design

3.0 Mold & Press Integrated Design
- 3.1 Structure
- 3.2 Hydraulics

4.0 Molding Pressure/Temperature Cycles

5.0 Maintaining Mold Temperature
- 5.1 Heating Apparatus for Molds
- 5.2 Heaters for Oil

1.0 Introduction:

The following documents cover various aspects not covered in this document:

The Mold and Hydraulic Press are an integrated design. The intent of the design is to encompass both the Calorimeter Electromagnetic Barrel and End Caps with as few changes as possible. It will be used to form both the absorber and signal electrode plates.

In order to achieve the final shape of the absorber plates and signal electrodes within the specified tolerances for angles and spacing, and to cure the composite for structural rigidity, the bent plates are placed into a precise mold where pressure and heat are applied. The molds are heated and cooled via hot and cool oil ported through the mold itself. Pressure is applied through a hydraulic press applying 500 tons of force.

For the absorber plates the pressure and cure cycle is as follows: Constant pressure of approximately 150 psi, room temp to 120°C in 20 minutes, 120C for 90 minutes, 120C to room temp in 20 minutes. This cycle is shown in figure 1.0.

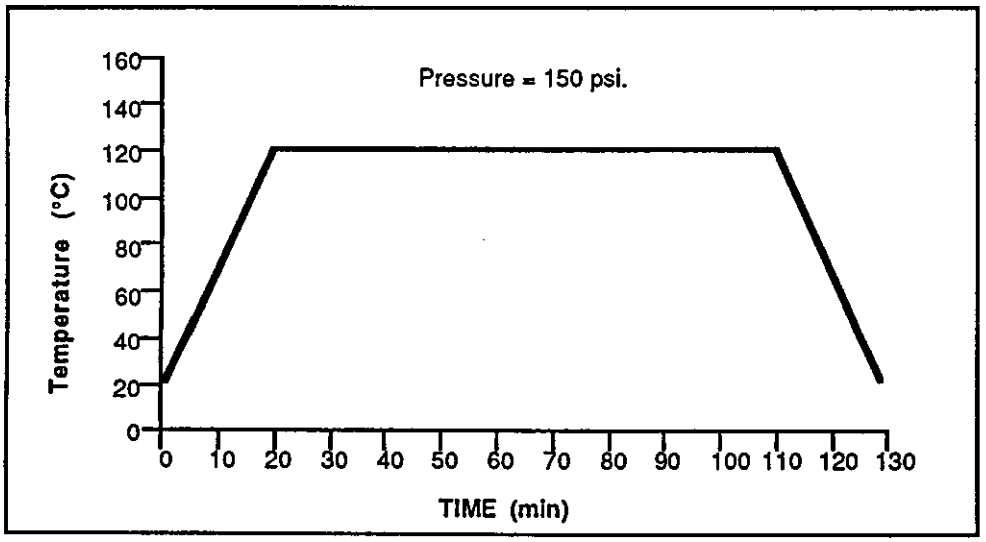

Fig 1.0 Absorber Plate Molding Temperature Requirements

The cycle required for the signal electrode is shown in figure 1.1.

2.0 Mold Design and Fabrication:

2.1 Geometry Definition:

The final geometries of the barrel and end cap absorber plate are defined at cryogenic conditions The angles, dimensions, and spacing are determined through the GEANT code, optimizing several performance parameters such as resolution, Pi Zero rejection and pointing during operation. For this reason it is important to understand the thermal deflection of all the plates to be formed so that the mold can be designed to have the correct geometry at the appropriate forming temperature.

For the absorber plates in both the barrel and the end cap, the pre-preg begins to set somewhere between 120°C and room temperature. Therefore, the mold geometries are specified such that the geometry at room temperature will create an absorber which will deflect to the required final geometry at cryogenic conditions. This was achieved through finite element analyses using the temperature dependent properties for the coefficient of thermal expansion, modulus and yield strength of all the materials within the plate. The orthotropic properties of the G10 were also used, however a sensitivity study showed that the G10 properties had less than a 1% contribution to the final shape.

<u>The following tolerances are used for all the molds:</u>

Flatness/Parallelness	.05mm for the entire length
Angular Tolerance	+/- 10'
Height	+/- 0.03 mm
All Other Dimensions	+/- 0.25mm

2.2 Materials:

The material chosen for the molds is 7075 T6 Aluminum , coated with .001 in of Teflon impregnated Anodize hardcoat. The primary resaon for this choice is it's smaller mass, lower heat capacity, and better thermal conductivity. It is also easy to machine.

2.3 Detailed Design:

There is an upper and lower mold both fabricated from 4 inch (approx. 100 mm) thick aluminum. Each Mold has holes drilled through the shorter length to act as heating and cooling passages. Figure 2.3 shows the detailed design of the upper mold for the EM barrel absorber plate.

The barrel section will use one mold for all absorber plates and signal electrodes. The end cap will require 5 molds, due to the varying geometries throughout the towers.

3.0 Mold & Press Integrated Design

3.1 Structure

The structure for the press is a large array of wide flange steel I-beams, as shown in figure 3.0. These beams are sized and spaced so as to maintain all deflections below .001 inch. The span of the beams is designed to accomodate both the barrel and end cap absorber and signal electrode plates, using the following mold size dimensions:

Width = 800mm
Length =4000mm

The upper mold is fixed to the upper portion of the structure, which is staionary. The lower mold is seated on the lower structure, which move upward with the hydraulic cylinders, guided by a central guide tube.

3.2 Hydraulics:

There are two rows of 5 hydraulic cyinders. Each has a 50 ton capacity, totaliing 500 tons for the entire press. These are single acting cylinders, placed on the bottom of the steel structure, so that the weight of the lower structure will automaticlly return the pistons. They have a stroke greater than 4 inches so that the part can be removed after molding. All ten cylinders are fed through a manifold, which is pressurized by a single pumping system.

4.0 Molding Pressure/Temperature Cycles:

The molding pressure and temperature cycles for the absorber paltes and the signal electrodes were shown earlier in this document in figures 1.0 and 1.1, respectively.

5.0 Maintaining Mold Temperature:

5.1 Heating Apparatus for Molds:

The plates must be heated in the mold. This shall be accomplished by running hot and/or cool oil through the mold as shown in figure 5.1. The mold shall be instrumented in several places to insure proper temperature distribution.

The thermal management system for the oil is essentially a manual operation, governed by valves as shown in fig 3.6.1A. Three tanks of oil are used: 200°C Oil; 120°C Oil; and 25°C Oil. The 200°C and 120°C tanks are electrically heated and thermostatically controlled. The 25°C tank is cooled by ground water. Once placed into the molds, pressure is supplied using another large press (approx. 500 tons) to achieve approximately 150 pi. (see fig 3.6.1B). The temperature is then ramped from room temperature to 120°C in 20 minutes, initially using the 200°C oil, then switching over to the 120°C oil. This temperature is maintained for 90 minutes. The temperature is then ramped down to room temperature using the 25°C oil.

5.2 Heaters for Oil:

The 200°C oil will be stored in a 165 gal drum. The 120°C and 25°C oil will be stored in 55 gal drums. The 200°C and 120°C oil will be heated by a thermostatically controlled 10,500 Watt electric heater immersed in the oil. The 25°C oil will be cooled by ground water passing through cooper tubes immersed in the oil.

EM UPPER MOLD DETAIL

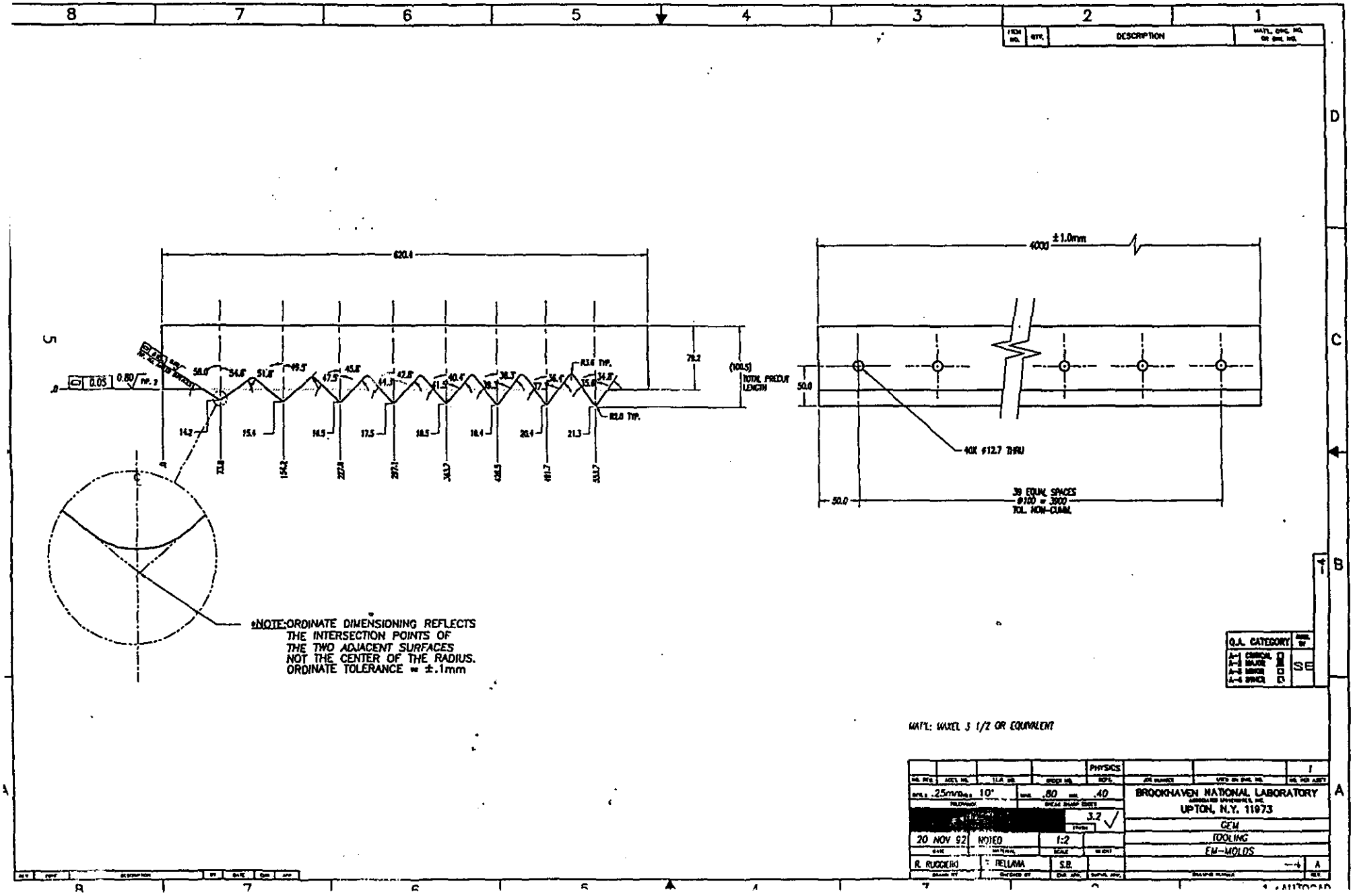

MOLDING PRESS = 150 PSI

SECTION A-A

ABSORBER MOLDING MACHINE GEM

2/9/93 SCALE: 1/18

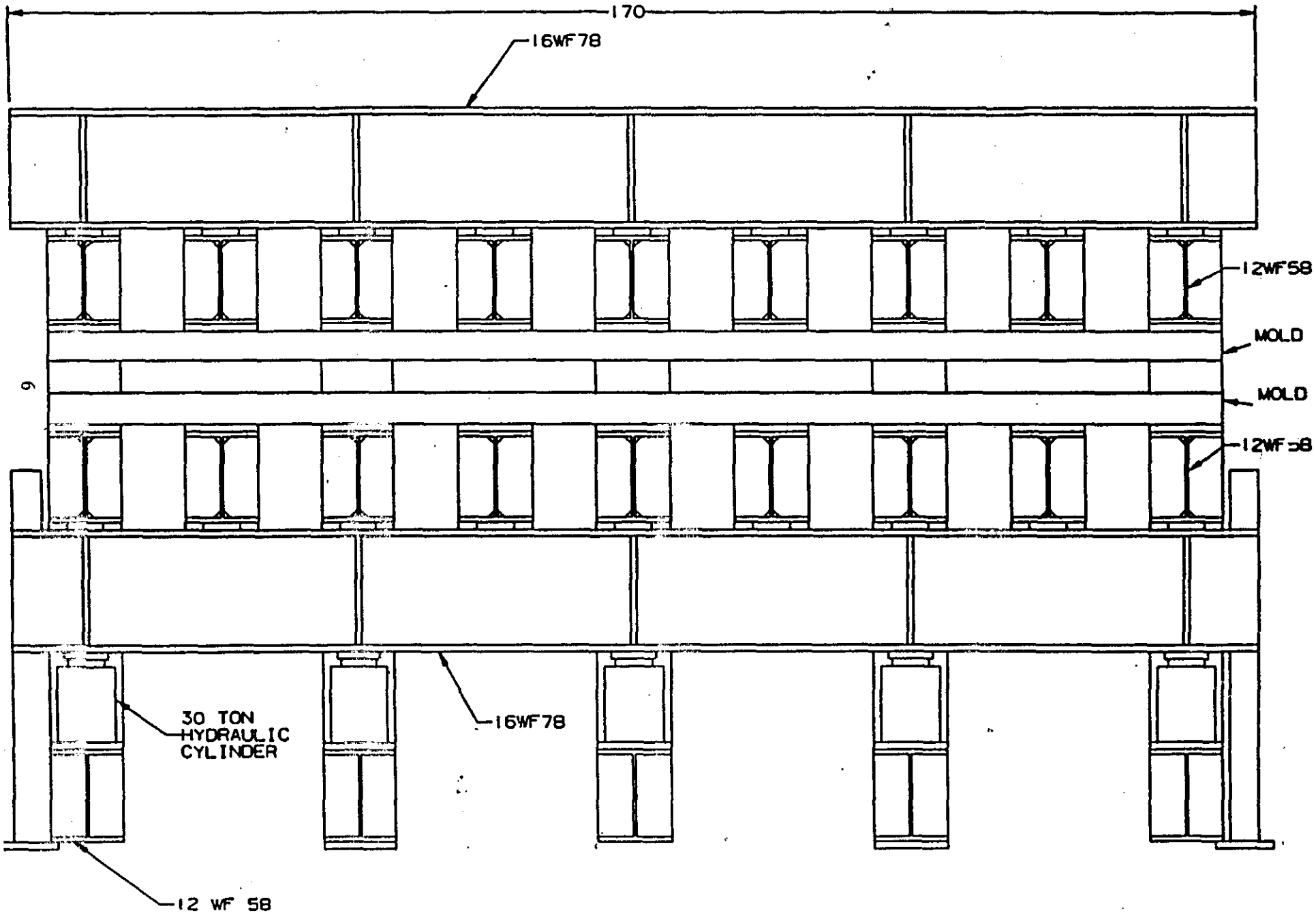

END VIEW

ABSORBER MOLDING MACHINE GEM

2/9/93 SCALE: 1/18

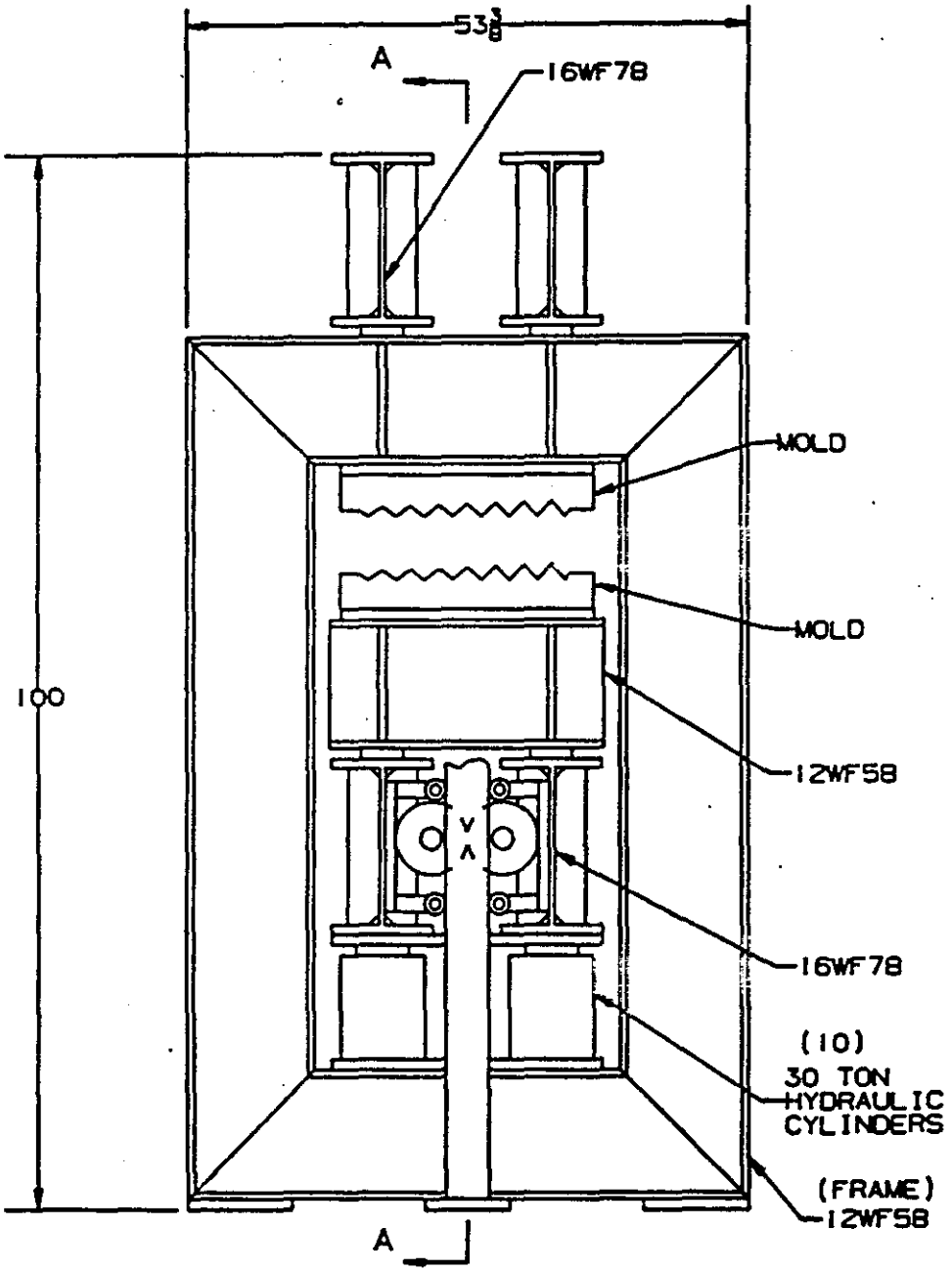

MOLDING PRESS.: 150 PSI
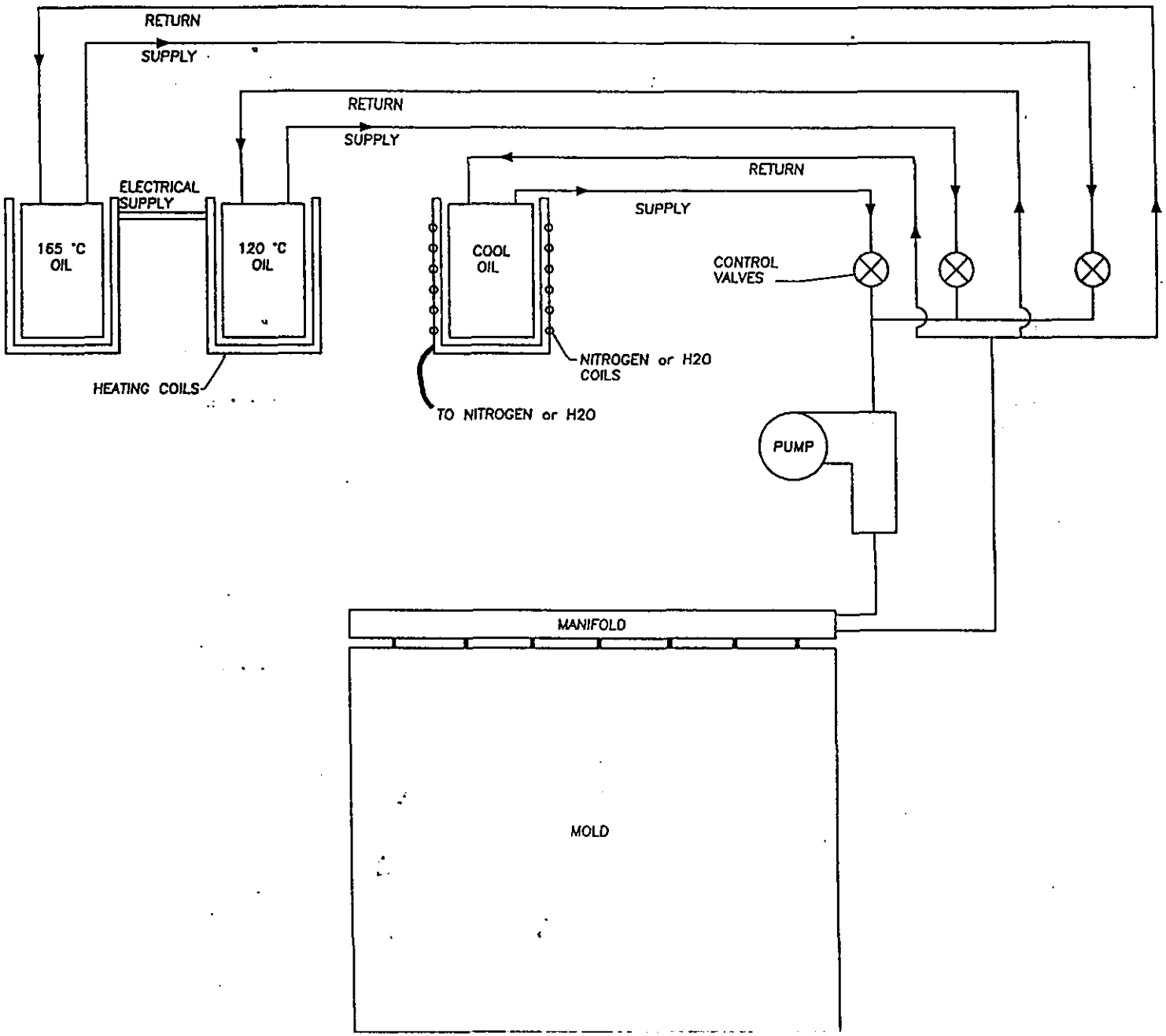
MOLD THERMAL MANAGEMENT SYSTEM