GEM TN-93-323

Absorber Specification for GEM Barrel & End Cap Electromagnetic Calorimeter

Steve Bellavia
Brookhaven National Laboratory

May 18, 1993

Abstract

The absorber plate for the GEM barrel and end cap electromagnetic calorimeter is a composite sandwich consisting of lead at the center, G10 (a fiberglass/epoxy pre-preg) on either side of the lead and stainless steel as the outer skins. The barrel and end cap absorber plates have different thicknesses of these materials, which are described in this document. The absorber plates are assembled as a flat lay-up, partially cured, and then bent into the accordion shape by use of a specialized bending machine. The final shape and cure are performed in a mold using heat and pressure.

TN-9 3-323

Absorber Specification for GEM Barrel & End Cap Electromagnetic Calorimeter

Steve Bellavia, et al.
May 18, 1993

TABLE OF CONTENTS

1.0 Introduction

2.0 Absorber Plate Geometry Definition and Specification
- 2.1 Barrel
- 2.2 End Cap

3.0 Materials and Preparation for Flat Lay-up.
- 3.1 Materials
- 3.2 Stainless Steel
- 3.3 Pre-Preg
- 3.4 Lead
- 3.5 Dimensions of Flat Lay-up Materials
- 3.6 Material Preparation

4.0 Pre-Curing ("B-Staging") the Composite

5.0 Absorber Plate Bending
- 5.1 Barrel
- 5.2 End Cap

6.0 Absorber Plate Molding
- 6.1 Barrel
- 6.2 End Cap

7.0 Final Trimming and Geometry

8.0 Attachments, Spacers and Assembly
- 8.1 Barrel
- 8.2 End Cap

1.0 Introduction

A basic cell of the accordion structure consists of an absorber plate, a liquid argon or krypton gap, a signal electrode and another liquid argon or krypton gap. The absorber plate is a composite sandwich with lead as the center layer, sandwiched on both sides with G10 (Epoxy/Fiberglass) and stainless steel. See figure 1.0.

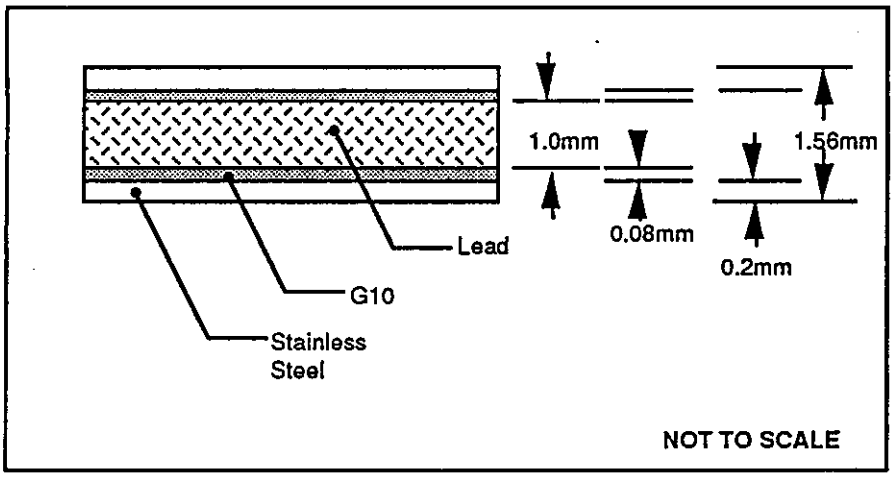

Fig 1.0 Barrel Absorber Plate Layup

A portion of the absorber plate has no lead, replaced by an equal thickness of G10 to form a massless gap at the inner radii. The function of the massless gap is to compensate for the unsampled material in front of the calorimeter. For the barrel, the massless gap measures 38 mm (in radius) from the beginning of the active region in the bent, cryogenic configuration. See figure 1.1. In the flat, room temperature condition, this corresponds to 45.46 mm, or 54.46 mm total, starting from the edge of the plate as shown in figure 1.1a.

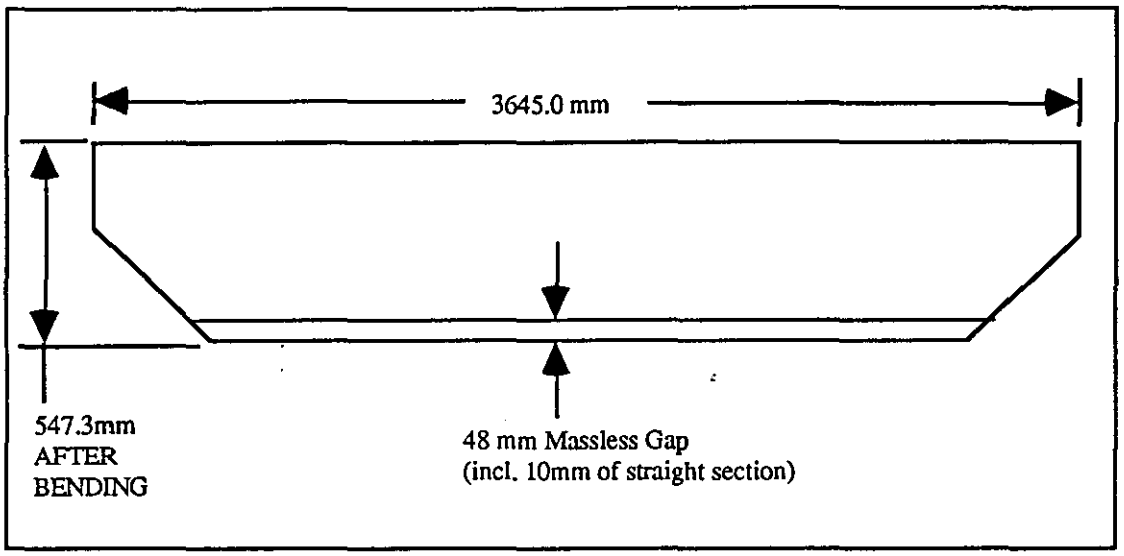

Figure 1.1, Barrel Absorber Plate with Massless Gap, In Bent, Cryogenic Configuration.

Equal sampling in the accordion as a function of radii is achieved by varying the bend angle as well as the exact length of the straight sections between bends.

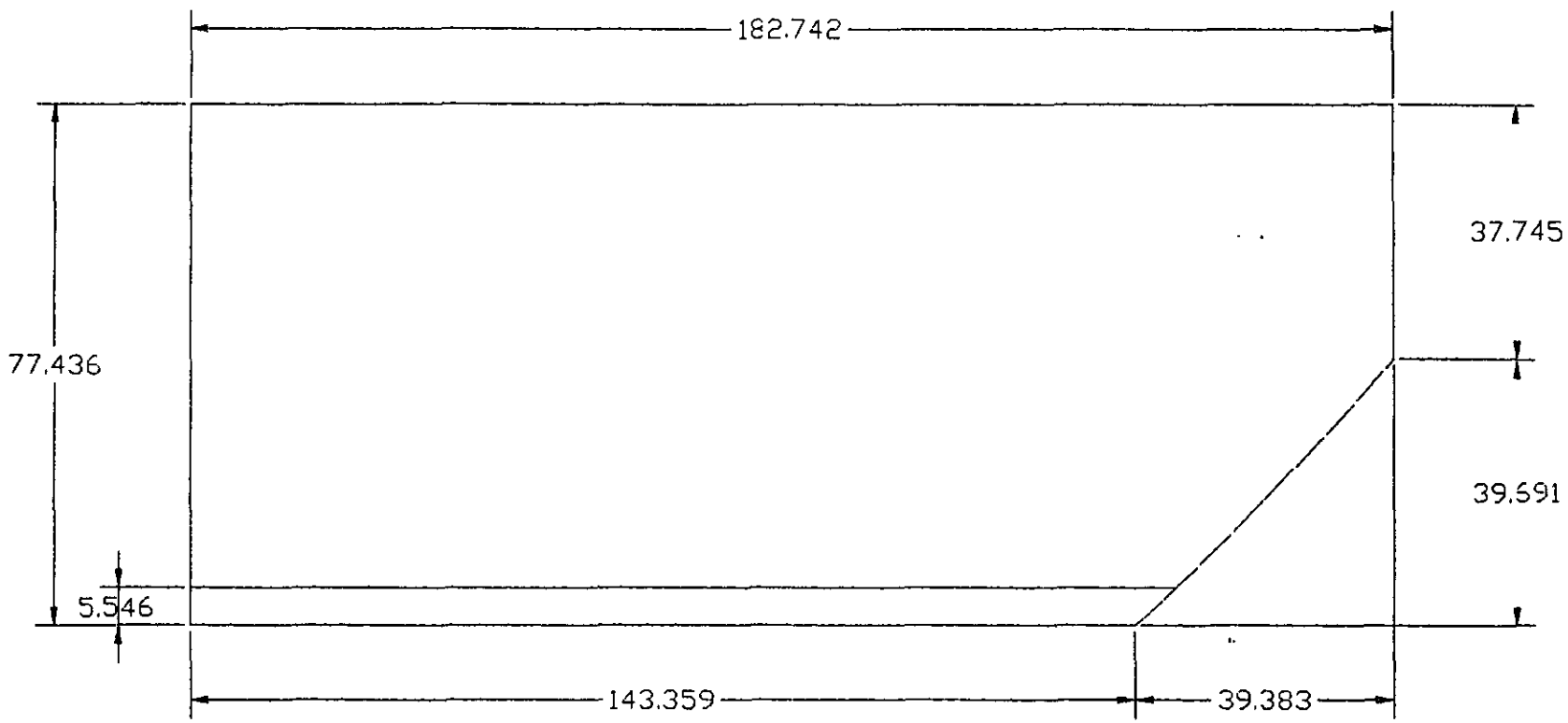

Fig 1.1a EM BARREL SIGNAL ELECTRODE
FLAT, ROOM TEMP CONFIG.

2.0 Absorber Plate Geometry Definition and Specification:

2.1 Barrel:

The final geometry of the absorber plate for the barrel was shown in figure 1.2. This configuration is for the cryogenic condition for liquid krypton at 112 K. The angles, dimensions, and spacing were determined through the GEANT code, optimizing several performance parameters such as resolution, Pi Zero rejection and pointing, resulting in a beta/delta of 4.0 (The number of plates a single ray trace passes through. It is desired to maintain the spacing of the plates to +/- .10mm. Thus the following angular and spatial tolerances are to be achieved:

Angular tolerance	+/- .5 deg
Dimensional Tolerance	+/- .10mm

2.2 Geometry Definition in warm condition:

However, the formation of the absorber plate geometry occurs between room temperature and 80°C. Thus, the angles and dimensions for the bending and molding apparatus (reference documents TN-903-324 and 325 respectively) were developed to take into account the thermal deflection of the absorber composite. This was achieved through finite element analyses using the temperature dependent properties for the coefficient of thermal expansion, modulus and yield strength of all the materials within the plate. The orthotropic properties of the G10 were also used, however a sensitivity study showed that the G10 properties had less than a 1% contribution to the final shape.

3.0 Materials and Preparation for flat lay-up:

3.1 Materials:

Both the barrel and end cap absorber plates use the same materials, however the thicknesses vary. The description of the materials along with the respective dimensions for the barrel and end cap follow.

3.2 Stainless Steel:

The stainless steel is a an AISI type 304 annealed stainless, which comes in sheets and forms the outer skins of the absorber.

Fig 1.2 EM BARREL ACCORDION GEOMETRY

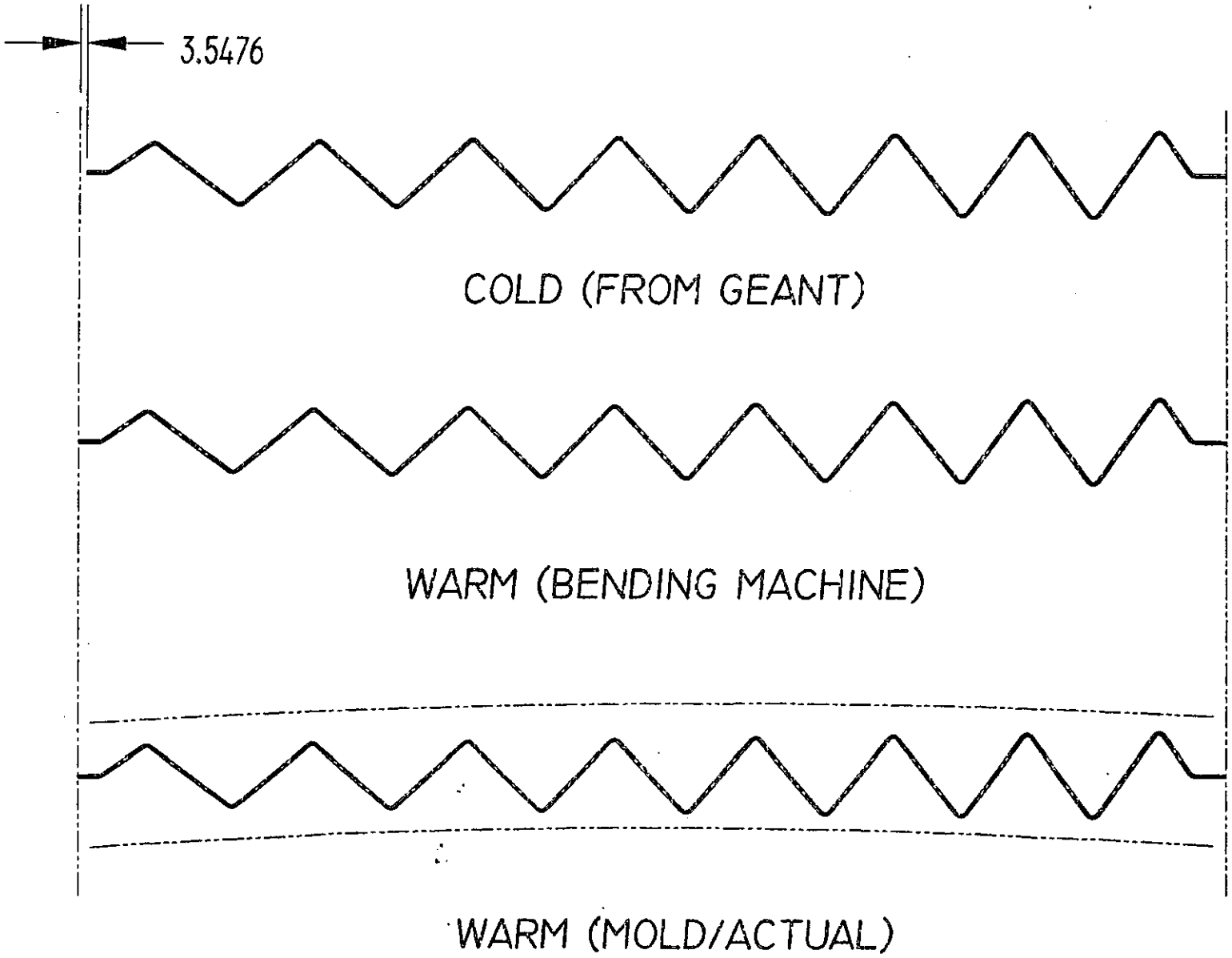

3.3 Pre-Preg:

The pre-preg is G10, which is a fiberglass cloth pre-impregnated with epoxy resin in a ratio of 5:1 fabric to resin (by volume). The epoxy is not yet cured and is tacky. It must be stored at or below 40°F or in a vacuum to prevent moisture absorption. It has 4 layers of .12 mm balanced weave cloth which is then B-staged and compressed down to .08mm. See section 3.6 for more details on the B-staging process.

3.4 Lead:

The lead has 0.6%Ca and 0.53% Sn. It is referred to as MFS 605, and is delivered on a roll.

3.5 Dimensions of flat layup materials:

The barrel absorber plate materials dimensions and tolerances are listed as follows:

Material	Barrel	End Cap
Stainless Steel -	0.2mm +/- .025mm	0.15mm +/- .025mm
Lead -	1.0mm +/- 10% (0.1mm)	1.2mm +/- .12mm
Pre-preg ("G10")	.12mm cmpr to .08mm	.12mm cmpr to .08mm

Barrel Plate Dimensions:

Before bending (RT) 774.4 mm x 3654.8 mm

After Bending (112K) 547.3 mm x 3645.0 mm

End Cap Plate Dimensions:

See Figure 3.5 and Table 3.5.

Fig 3.5 End Cap Geometry

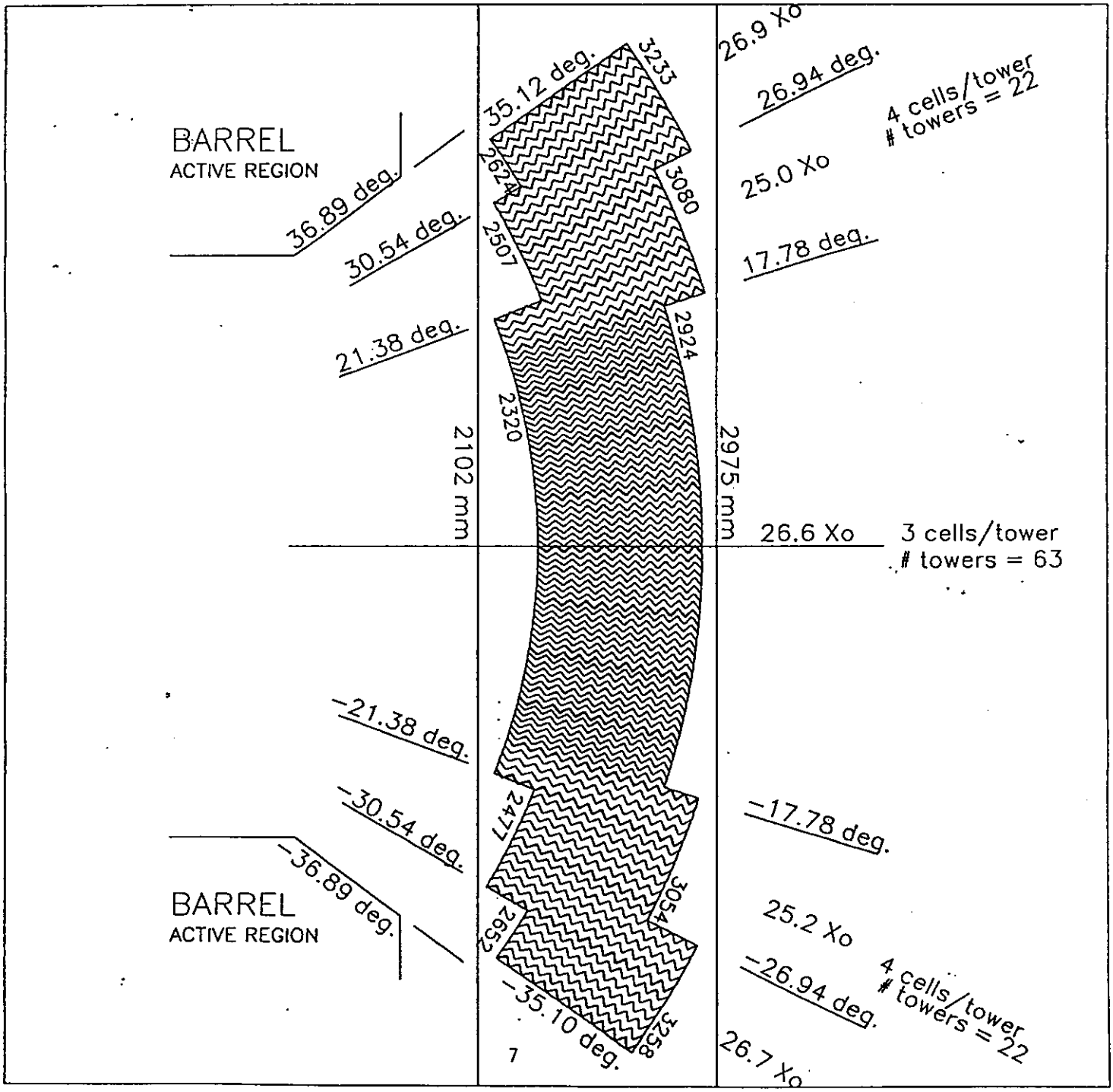

GEM ENDCAP EM LAr PROJ. ACCORDION CALORIMETER
INCLUDES FIRST HAD. SEC.
Version 1.0 ; 2/16/93

DATE: 930331 TIME: 1027

ncl_step,nl_over,n : 119 104 8
ncl_step,nl_over : 112 96

LEFT SIDE OF ENDCAP

pie	inner rad. [cm]	outer rad. [cm]	act. depth [cm]	sheet width [cm]	horiz. cells #	ang range deg.	eta range	dist.from z-axis [cm]
1	232.01	292.44	60.43	84.25	0- 96	17.78	1.855	
1/2	232.01	308.07	76.06	107.17	97-112	21.38	1.667	84.57
2	250.78	308.07	57.28	82.91	113-144	26.94	1.429	
2/3	250.78	323.35	72.56	106.05	145-160	30.54	1.298	127.44
3	262.42	323.35	60.93	82.84	161-184	35.12	1.151	150.97

RIGHT SIDE OF ENDCAP

pie	inner rad. [cm]	outer rad. [cm]	act. depth [cm]	sheet width [cm]	horiz. cells #	ang range deg.	eta range	dist.from z-axis [cm]
1	232.01	292.44	60.43	84.25	0- 96	-17.78	1.855	
1/2	232.01	305.49	73.48	103.34	97-112	-21.38	1.667	-84.57
2	247.79	305.49	57.70	83.01	113-144	-26.94	1.429	
2/3	247.79	325.86	78.07	113.88	145-160	-30.54	1.298	-125.91
3	265.25	325.86	60.61	82.90	161-181	-35.10	1.151	-152.51

TABLE 3.5 End Cap Geometry

3.6 Material Preparation:

The materials are received in flat sheets or in roll form. Prior to bonding the composite sandwich together, the lead and stainless must be abraded and degreased. Obtaining materials with a textured surface to promote bonding without the necessary abrading is currently being investigated. The sheets or rolls of lead and stainless are carefully cut or sheared to match the dimension in the "Z" or long dimension, since cutting along the corrugated edge after bending is difficult. The dimension in the short direction is left slightly larger than the final size, which is trimmed after bending and molding.

4.0 Pre-Curing ("B-Staging") the Composite:

After cold lay-up of all layers of the sandwich, the entire 4 meter long package is vacuum bagged with a 1/4 inch thick aluminum plate on top and bottom and then placed into a large oven, pre-heated to 80°C. See figure 4.0. The part remains in the oven under vacuum for 15 minutes and is removed. The part is then considered "B-Staged". This is allows the package to be handled, transported and bent without shifting of the layers, however, the G10 is not fully cured and can be softened again by re-heating to 80°C.

5.0 Absorber Plate Bending:

Details on the bending machine and bending process are in document TN-903-324.

The bending process requires to pre-heat the composite sheet to soften it to avoid tearing and cracking at the bends. This is accomplished in a long, low profile oven as shown in figure 4.1. The part is placed in the oven at 80°C for 45 minutes immediately before being placed into the bending machine.

Fig 4.0 **B-STAGING OVEN**

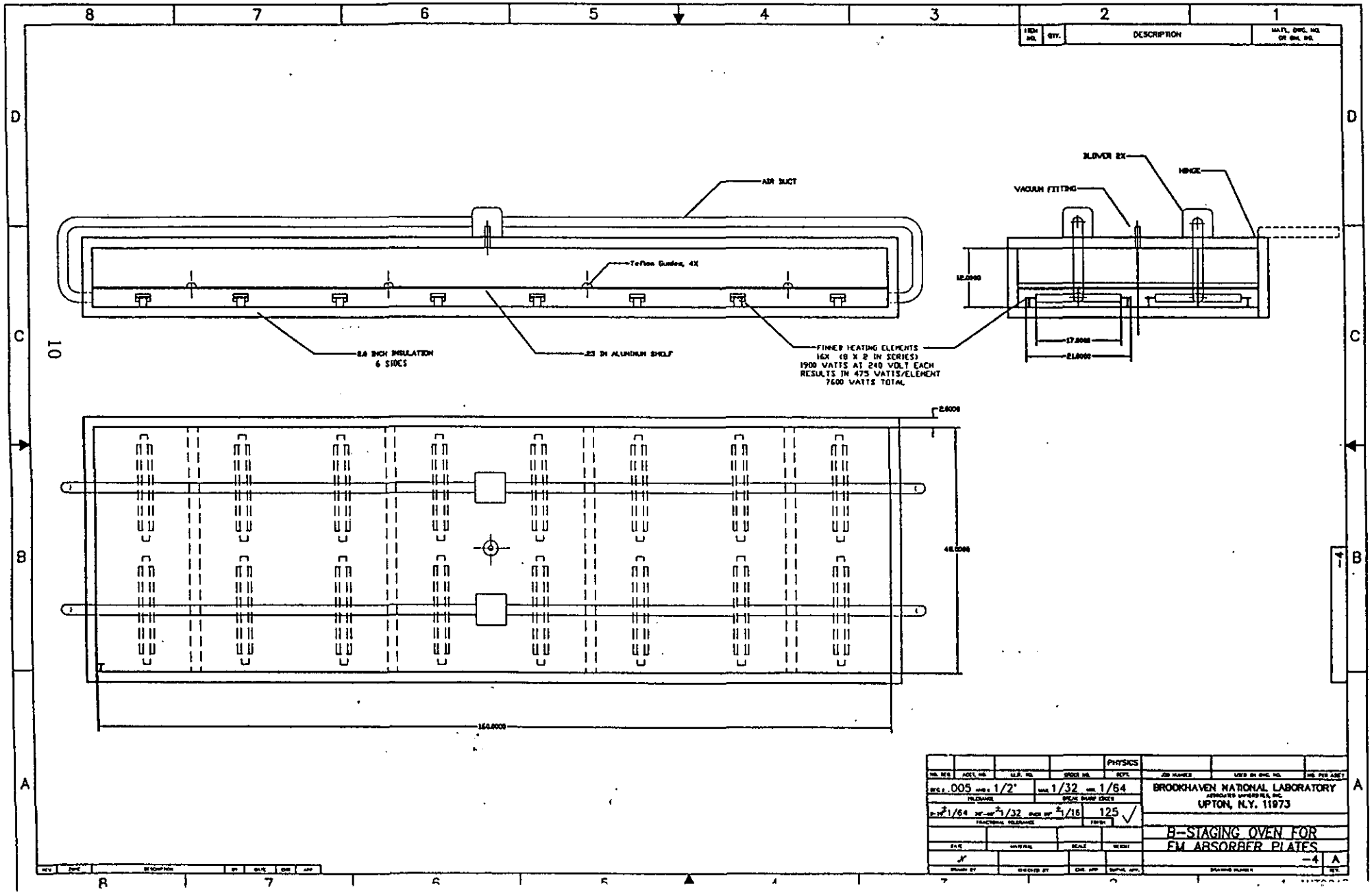

Fig 4.1 Pre-Heating Oven

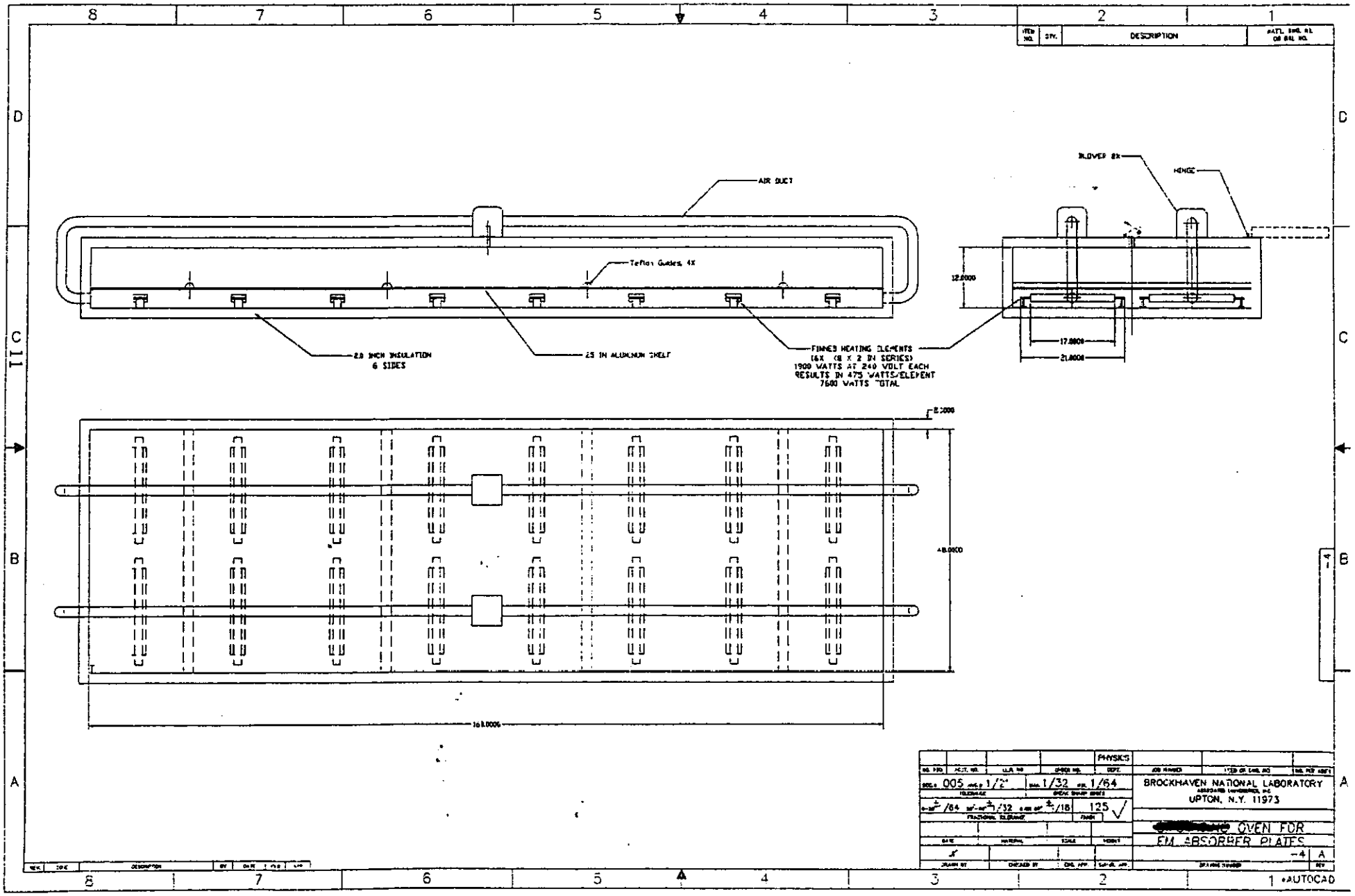

Fig 5.0 **BNL/GRUMMAN BENDING MACHINE/PRESS**

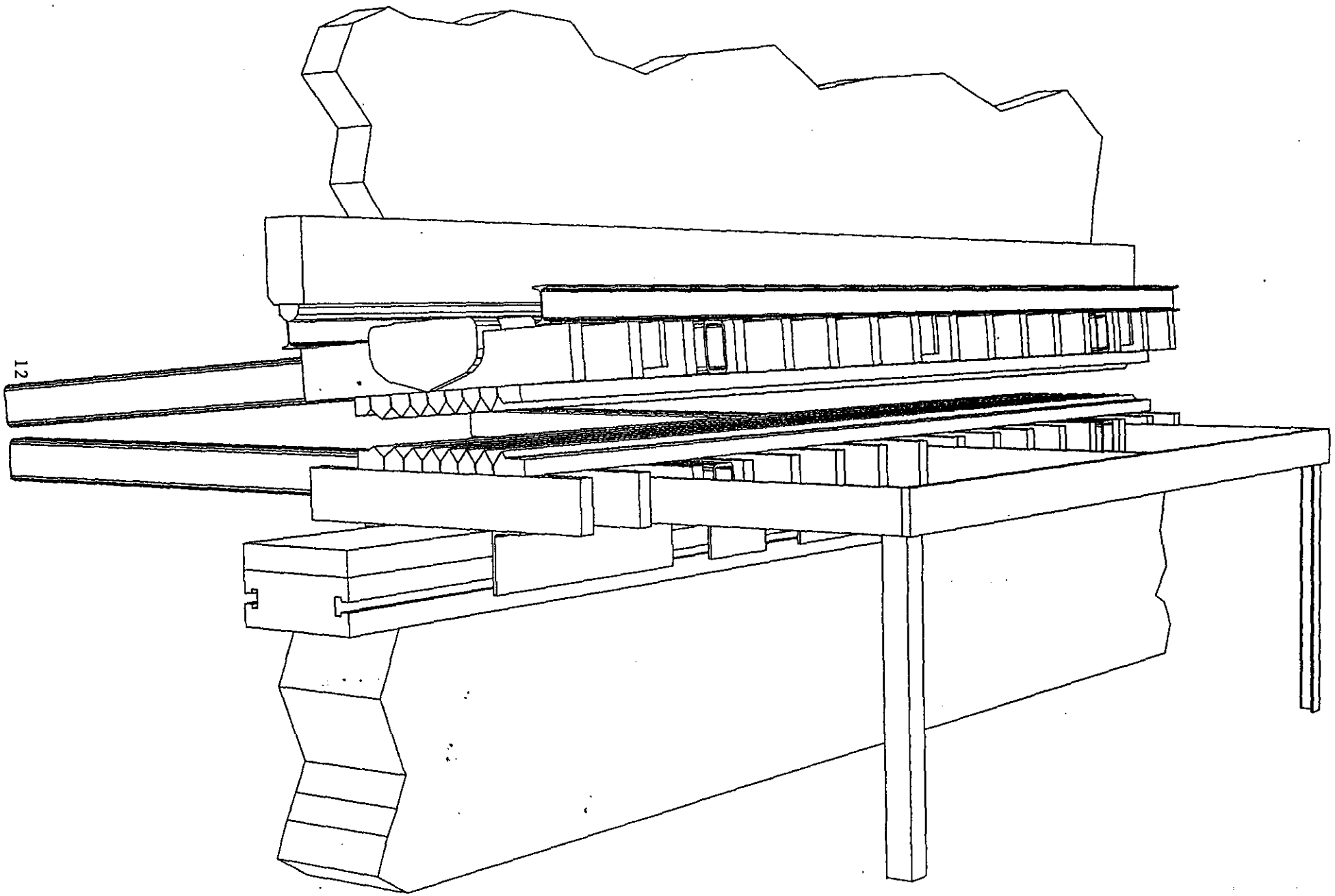

Fig 5.1

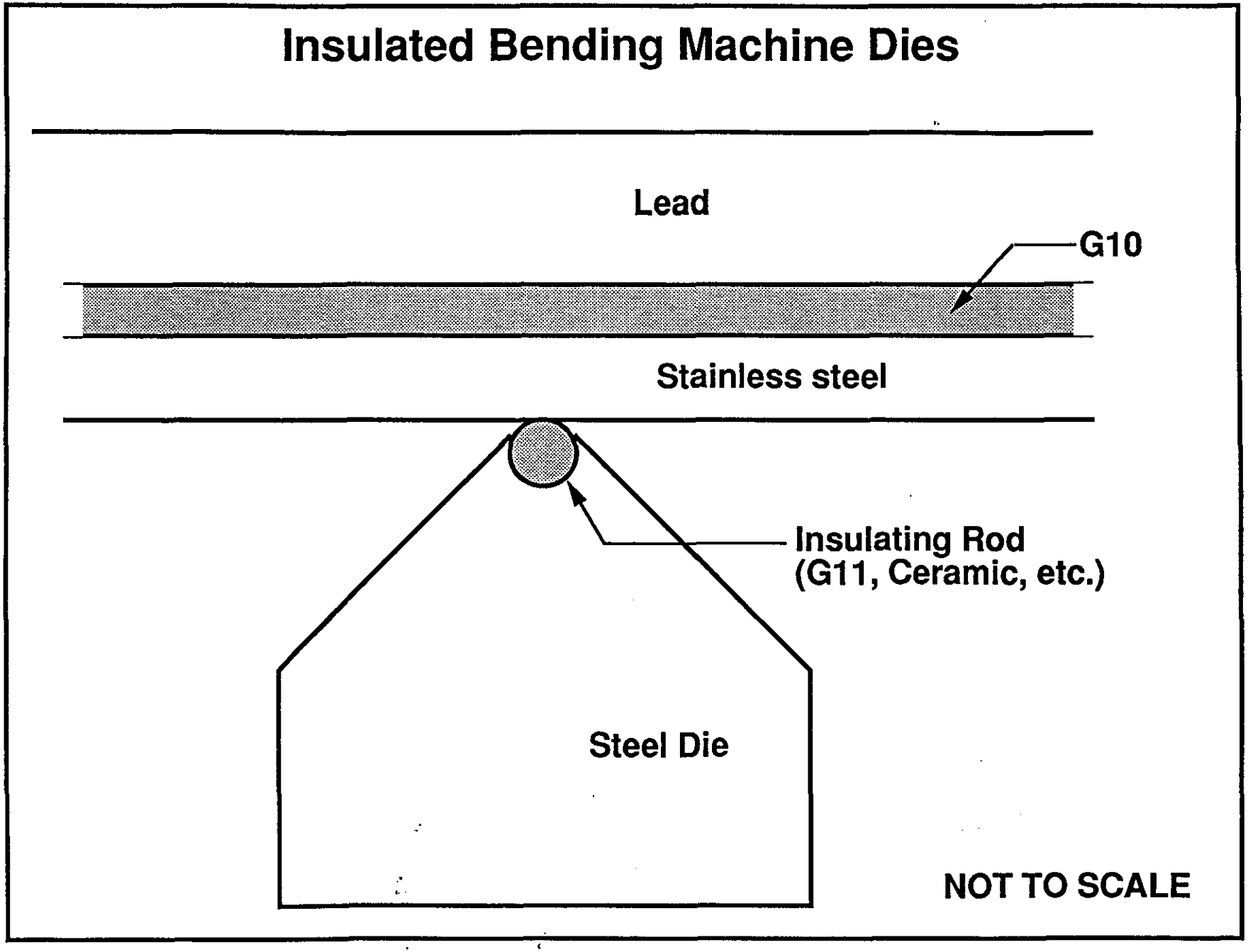
Insulated Bending Machine Dies
Lead
G10
Stainless steel
Insulating Rod
(G11, Ceramic, etc.)
Steel Die
NOT TO SCALE

The pre-heated flat sheet lay-up is placed into the bending machine. A large press (approximately 400 tons) is required to drive the bending machine as shown in figure 5.0. The die tips are insulated with a high strength non-metallic rod to prevent heat loss into the steel die and also provide the necessary radii on each bend, as shown in figure 5.1. The part will cool quickly once the sides come in contact with the steel dies.

After bending is complete and the part has cooled, the bent sheet is removed and placed onto a protective storage rack which prevents damage to the surface.

6.0 Absorber Plate Molding:

Details on the molds and molding process are in document TN-903-325.

In order to achieve the final shape of the absorber plate within the specified tolerances for angles and spacing, and to cure the composite for structural rigidity, the bent plate is placed into a precise mold where pressure and heat are applied. See figure 6.0. The molds are heated and cooled via hot and cool oil ported through the mold itself. Pressure is applied through a hydraulic press applying 500 tons of force. The pressure and cure cycle is as follows: Constant pressure of approximately 150 psi, room temp to 120°C in 20 minutes, 120C for 90 minutes, 120C to room temp in 20 minutes. This cycle is shown in figure 6.1.

6.0 Absorber Plate Molding (cont.):

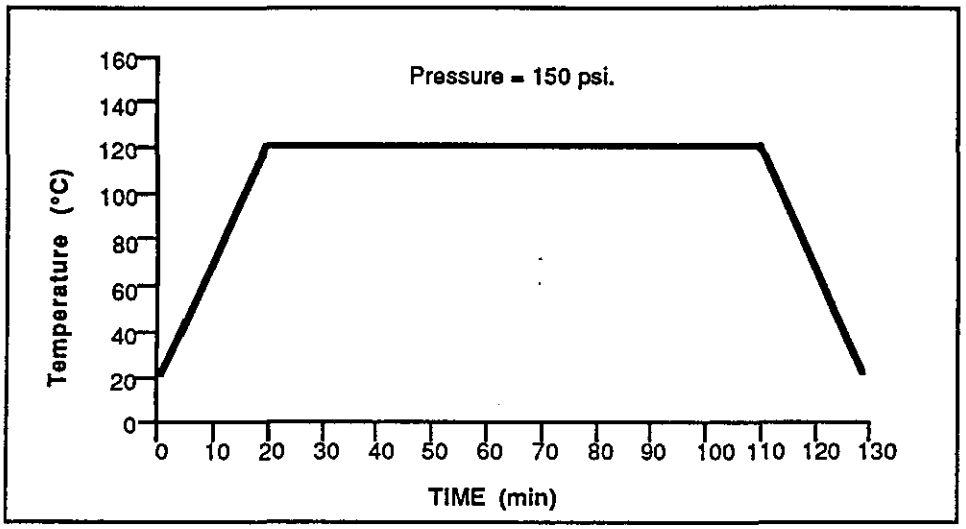

Fig. 6.0 Molding Temperature Requirements

7.0 Final Trimming:

After Molding, the part is trimmed along it's long edges using a high speed cutter or water knife to achieve the final dimensions.

8.0 Attachments, Spacers and Assembly:

The details of the attachment and assembly of the absorber plates into the electromagnetic barrel calorimeter are described in document TN-903-320.