GEM TN-93-321

GEM Noble Liquid Calorimeter Endcap EM Calorimeter Structural Design Concept

Brian Easom
Bob Humphreys
Rich Hund
Mark Lajczok
Martin Marietta Science System

May 24, 1993

GEM TN – 93 – 321

GEM Noble Liquid Calorimeter Endcap EM Calorimeter Structural Design Concept

May 24, 1993

Brian Easom
Bob Humphreys
Rich Hund
Mark Lajczok

CONTENTS

Page

1.0 INTRODUCTION 1
2.0 STRUCTURAL REQUIREMENTS 1
2.1 Cell Requirements 1
2.2 Absorber Plate and Signal Electrode Requirements 2
2.3 Module Requirements 3
2.4 Material Selection Criteria 3
2.5 Thermal Expansion and Contraction Requirements 3
3.0 STRUCTURAL DESIGN CONCEPT 3
3.1 Overall Size and Mass 3
3.2 Cell Structure 3
3.3 Accordion Structure 4
3.3.1 Absorber Plate 4
3.3.2 Signal Electrode 4
3.4 Module Structure 4
3.5 EM Monolith Structure 5
3.6 Endcap EM Monolith Support Within the Cryostat Liquid Vessel 8
4.0 STRUCTURAL ANALYSIS 9
4.1 Absorber Plate Deflection Subject to Gravity Loading 9
4.2 Absorber Plate Thermal Cool Down 11
4.2.1 Experimental and Analytical Determination of Thermal Cool Down of an Equal Bend Absorber Plate 11
4.2.2 Absorber Plate Thermal Cool Down Analysis 13
4.3 Future Structural Analysis 14
5.0 MODULE ASSEMBLY 15
5.1 Assembly Process 15
5.2 Protective Absorber Plate 17
6.0 MONOLITH ASSEMBLY 18
6.1 Assembly Onto Support Structure 18
6.1.1 Removal from Shipping Container and Breakover 18

Figure **Page**

1-1 GEM Calorimeter Concept....1
2.1-1 Spacing and Material Requirements for the EM Cells....2
3.3.1-1 EM Inner Spacer Attachment....5
3.4-1 Endcap EM Modules....6
3.4-2 Typical EM Module....7
3.4-3 Endcap EM Monolith Support Structure....7
3.6-1 EM Assembly Support Concept....8
4.1-1 EM Absorber Plate Geometry....10
4.1-2 EM Absorber Plate Lay-up....10
4.2.1-1 Equal Bend Absorber Plate Geometry....12
4.2.1-2 Equal Bend Absorber Plate Lay-up....12
4.2.1-3 Equal Bend Absorber Plate Deformation....13
4.2.2-1 EM Absorber Plate Deformation....14
5.1-1 Module Assembly Table....15
5.1-2 Absorber Plate on Assembly Table....16
5.1-3 Signal Electrode Assembly Onto Absorber Plate Spacer....16
5.1-4 Channel, Threaded Insert, and Tie Rod Installation....17
5.2-1 Attachment of Protective Absorber Plate....18
6.1.1-1 Module Shipping and Breakover Orientation....19
6.1.1-2 Breakover Sequence....20
6.1.2-1 Module Installation onto Support Structure....21
6.1.2-2 Assembly Showing Spacer/Support Locations....21

Table **Page**

4.1-1 EM Absorber Plate structural Properties 10
4.1-2 EM Absorber Plate Subject to Gravity – Analysis Results 11
4.2.1-1 Equal bend Absorber Plate Thermal Contraction – Test Results 12
4.2.1-2 Equal Bend Absorber Plate Thermal Contraction Results 13
4.2.2-1 EM Absorber Plate Thermal Contraction Analysis Results 14

1.0 INTRODUCTION

The noble liquid calorimeter, an integral part of the overall GEM Calorimeter (Figure 1-1), includes inner barrel and endcap subsystems with electromagnetic (EM) calorimetry. The endcap provides EM coverage in the range of $1.13 < \eta < 2.95$. The structural design concept for the EM calorimetry, located within the endcap cryostat, is discussed in this report and the Barrel EM calorimetry is discussed in TN93–320.

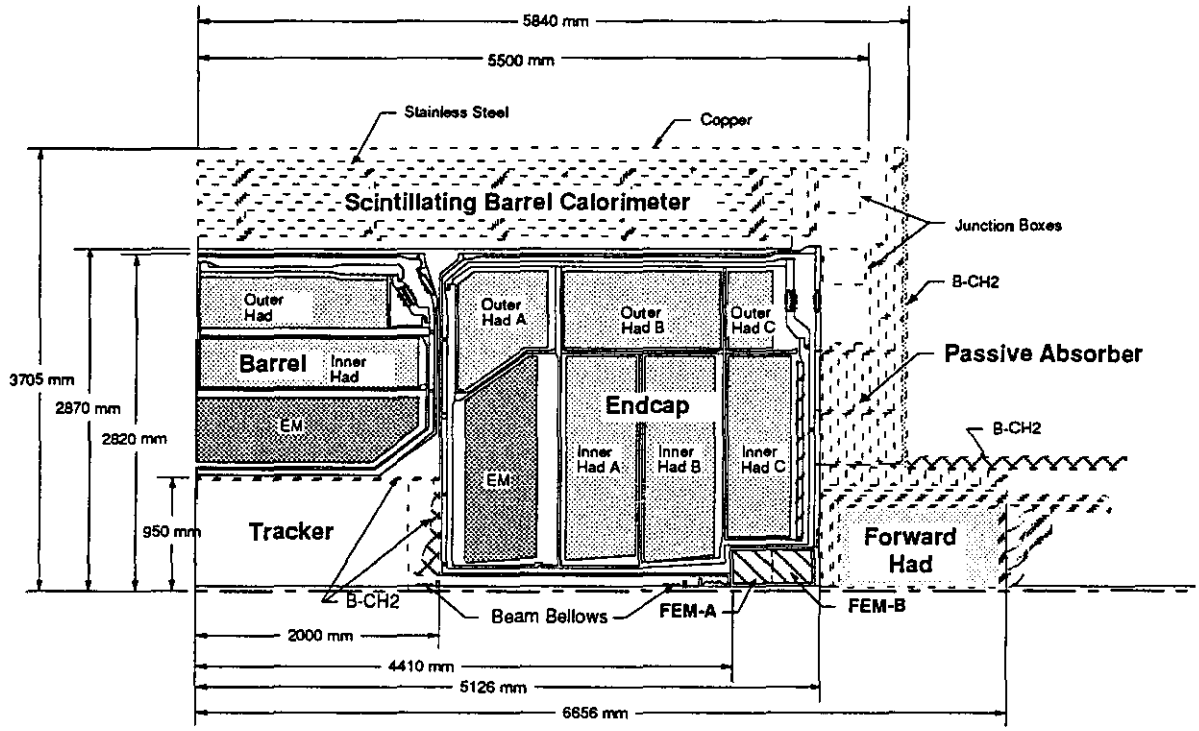

Figure 1-1 GEM Calorimeter Concept

2.0 STRUCTURAL REQUIREMENTS

The structural requirements for the endcap EM calorimetry have been developed through an iterative concept development process intended to maximize the achievement of physics goals. Since the structural or engineering requirements were considered in parallel with the physics goals, a relatively low risk structural design approach has evolved. The structural design requirements derived from the physics objectives are presented in the following sections.

2.1 Cell Requirements

The EM calorimetry shall include signal electrodes and absorbers with the cell spacing and materials specified in Figure 2.1-1. Signal electrodes and absorbers shall be designed using the accordion concept with a total of nine different configurations at LAr temperature (typical configuration shown in Fig. 2.1-2). These requirements assure a constant sampling fraction and

uniform density in the calorimeter by retaining near constant gap between absorbers and signal electrodes for all radial locations. They also permit the accordion bends to transition through 90 degrees near the middle of the calorimeter. Finally, these requirements assure that projective paths from the interaction point will pass through three absorber plates and three signal electrodes.

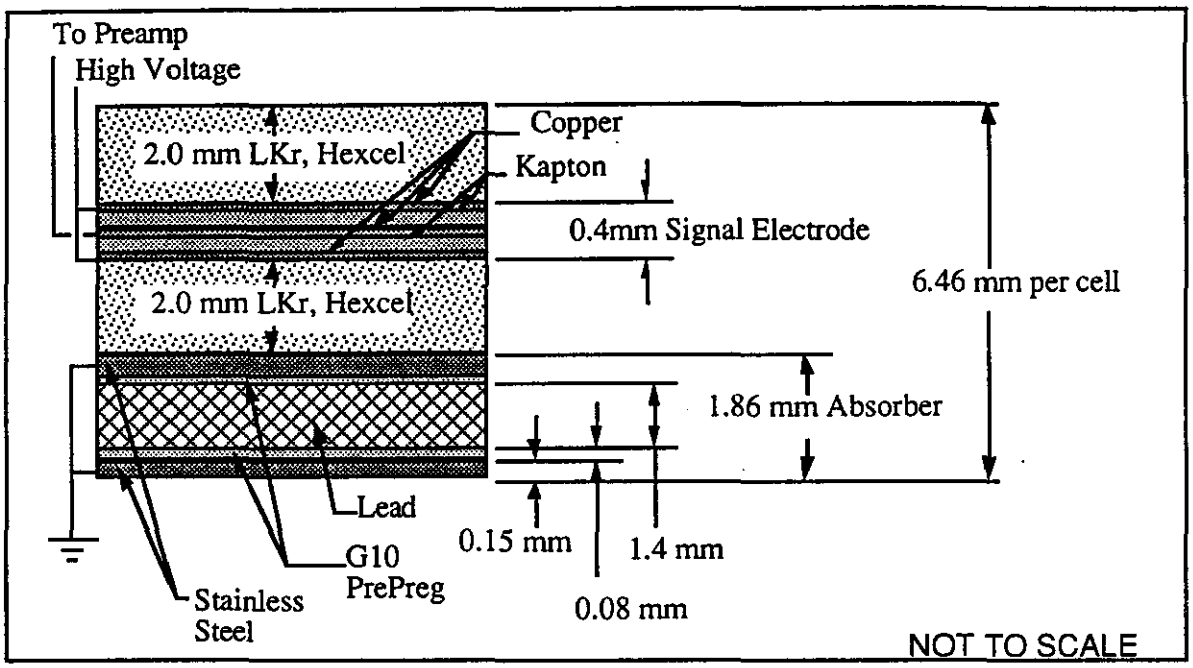

Figure 2.1-1 Spacing and Material Requirements for the EM Cells

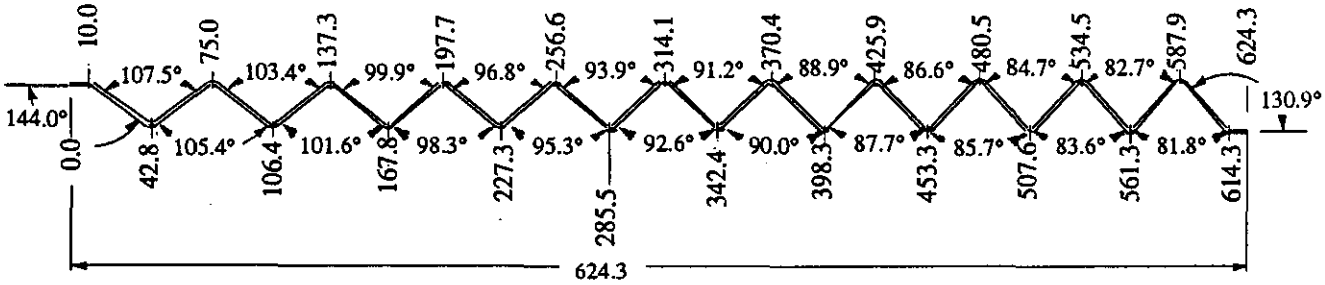

Figure 2.1-2 Typical EM Absorber Accordion Configuration at LAr Temperature

2.2 Absorber Plate and Signal Electrode Requirements

The signal electrodes and absorbers shall be designed for assembly into modules. The signal electrodes and absorbers shall be structurally continuous in the z- and r-directions. Out-of-plane deflection of the absorbers and signal electrodes shall not exceed 2 mm when installed.

2.3 Module Requirements

Typical modules contain 24 signal electrodes and either 23 to 25 absorbers, depending on location, requiring a total of 18 modules for the complete EM endcap section. Modules shall be structurally stable after assembly to permit transportation and handling associated with testing, shipment to the SSCL from the fabrication site, and assembly into the Endcap Calorimeter at the SSCL.

2.4 Material Selection Criteria

The materials selected for the endcap EM calorimetry shall satisfy all structural requirements at both room and LAr temperatures, withstand the radiation environment (2×10^6 Gray), and introduce no contaminants to the ionizing fluid (LAr).

2.5 Thermal Expansion and Contraction Requirements

The EM calorimetry shall be designed to permit thermal expansion and contraction without introducing unplanned stresses and/or deformation of calorimeter components. Adequate clearance shall be maintained between the active components and the cryostat liquid vessel to assure adequate space for mother boards, cooling tubes, and strip lines.

3.0 STRUCTURAL DESIGN CONCEPT

3.1 Overall Size and Mass

The active region of the EM calorimetry, determined by the electronic design of the signal electrodes, provides electromagnetic coverage over the range $\pm 1.13 < \eta < \pm 2.95$. The total mass of each Endcap EM section is 17.5 Mg (22.7 Mg including LAr).

The space between the EM accordion structure and the cryostat liquid vessel wall was selected to provide clearance for mother boards, cooling tubes, striplines, and a convective cooling flow path that assures adequate mother board cooling and proper temperature distribution within the cryostat (TN-93-316). Support of the accordion structure within the cryostat is discussed in Section 3.6.

3.2 Cell Structure

In compliance with the requirements each cell (the basic repeating element) consists of a 1.86 mm absorber plate, a 0.4 mm signal electrode and two 2.0 mm Liquid Argon gaps for a total cell depth of 6.46 mm (Fig. 2.1-1). The absorber is kept at ground potential while a high voltage is applied to the outer surfaces of the signal electrode. The conductive layer in the center of the signal electrode is capacitively coupled to the high voltage on the surface and is the sensed layer that is connected to the preamps. Hexcel™ strips are placed in the LAr space to maintain a minimum gap between the high voltage and ground. The cells are formed as the modules are assembled.

3.3 Accordion Structure

3.3.1 Absorber Plate

The room temperature configuration of the absorber plates that satisfy the required cold configuration (Figure 2.1-2) will be different for each of the nine configurations. These configurations will be developed from the cold configuration using a finite element analysis model (Section 4).

The differing coefficients of thermal expansion of the materials in the absorber plate combined with the small bend radius relative to the plate thickness result in a radial coefficient of thermal expansion that is larger than either lead or stainless steel. In the transition from room to LAr temperature the accordion plate shown in Figure 2.1-2 not only gets 3.7 mm shorter, it also "rotates" 2.14 mm .

After each accordion absorber plate is bent and pressed to the accordion configuration at room temperature, two to six spacers (Fig. 3.3.1-1) are bonded to the inner and outer edges. The location of these spacers is based upon structural support needs for the monolith and spacing for the motherboards and electronics. The length of each spacer (50 mm) was selected to provide the necessary structural strength to support the EM monolith. Each signal electrode is aligned by a key on the spacer such that each spacer keys into the spacer of the next absorber plate within a module. Spacers between modules are designed to restrain radial shear and are designed to allow limited vertical slippaged between modules.

3.3.2 Signal Electrode

The Signal Electrode cold shape will be identical to that of the Absorber Plates to assure proper spacing and stacking in the EM Module. The warm shape for the Signal Electrode which will satisfy the cold configuration has not been analyzed to date. However, it is believed to be less critical than the Absorber Plate which is the primary structural member and which will dominate the thermal shrinkage process. Care must be taken to assure that the Hexcel spacers never "bottom-out" as they are not intended to be a structural member.

3.4 Module Structure

Twenty four signal electrodes and 23 to 25 absorbers placed side-by-side with Hexcel spacers constitute the EM Module. Unlike the Barrel EM Modules, only two of the modules in each endcap are identical to any other module (Fig. 3.4-1). Each signal electrode is aligned by a key on the spacers which are designed to align with the spacers on adjacent absorber plates. Structural integrity of the module is provided by the spacers which provide shear continuity in the radial and axial directions and tie rods through the spacers which keep the spacers compressed. (Fig. 3.4-2).

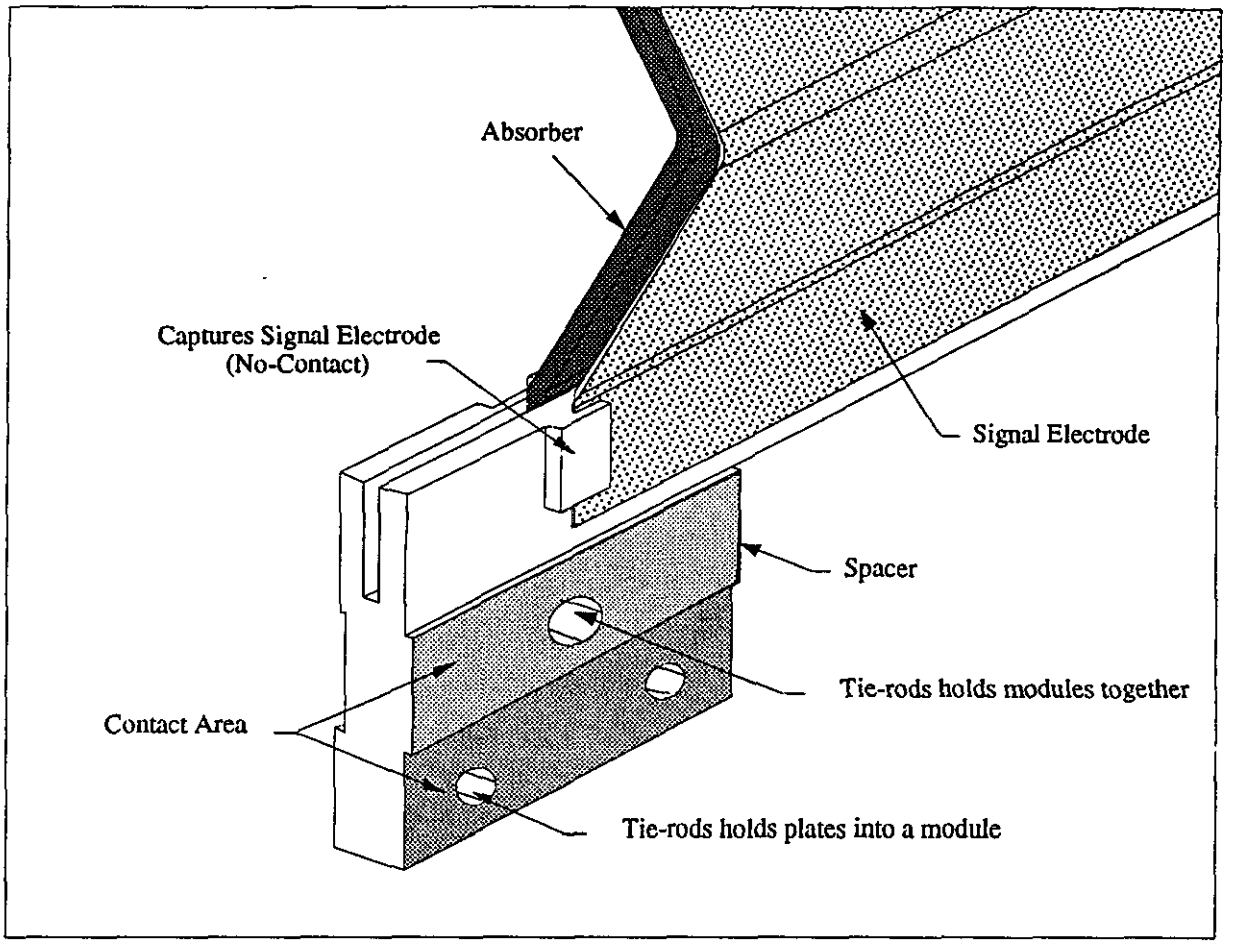

Figure 3.3.1-1 EM Module Inner Spacer Attachment

3.5 EM Monolith Structure

Structural integrity of the Endcap EM Monolith is obtained by up to 4 front and 6 back spacer rows that form a structural framework that attaches to the module support structure (Figure 3.5-1). Held in compression by means of tie rods at each front and back spacer location, these spacers provide moment capability between modules. Shear continuity between modules is provided by tabs that exist between mating spacers within a module. Vertical support of the monolith is provided attaching the module to the cryostat structure spacers.

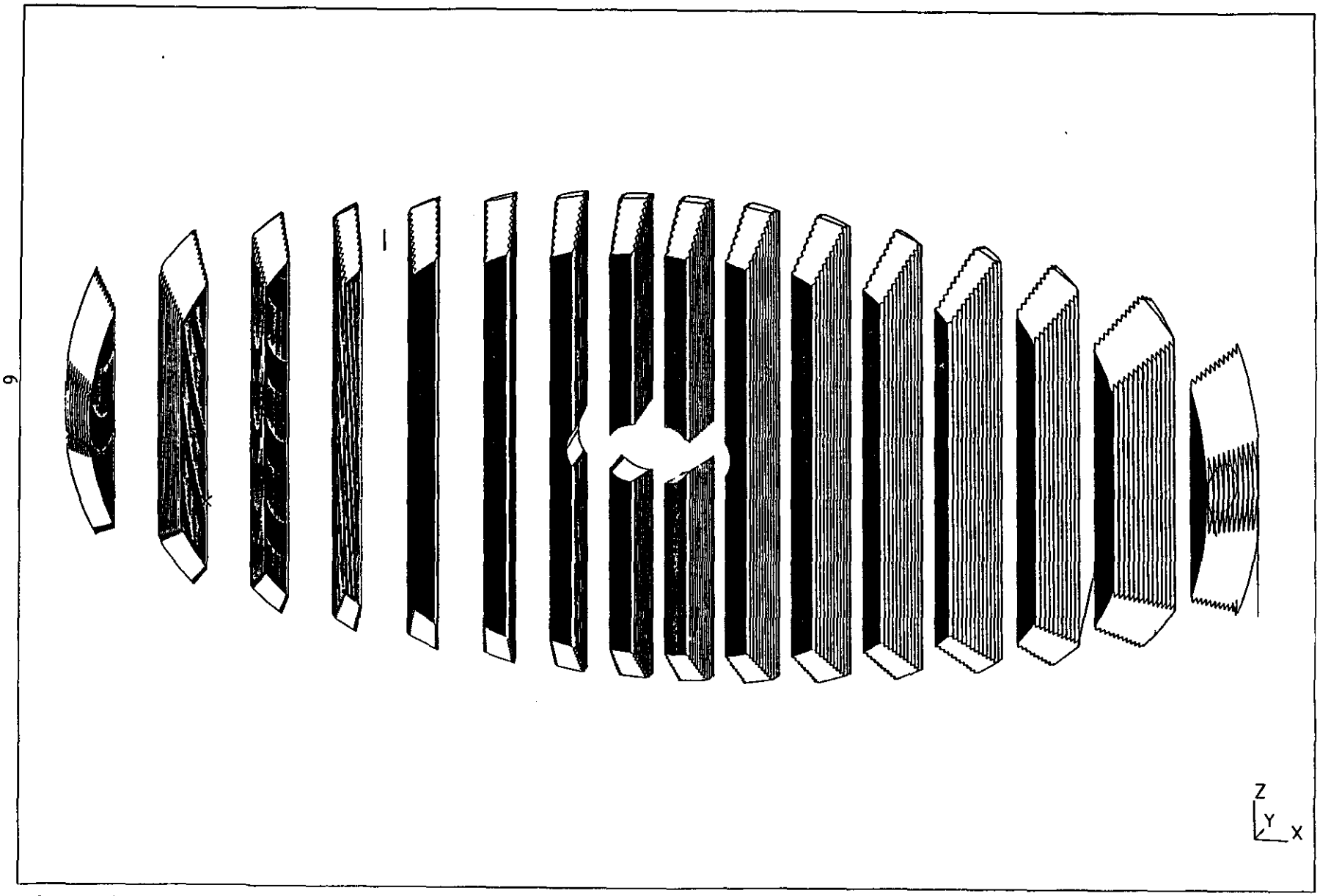

Figure 3.4-1 Endcap EM Modules

/disk4/hund/gem/em_endcap/explode.pst

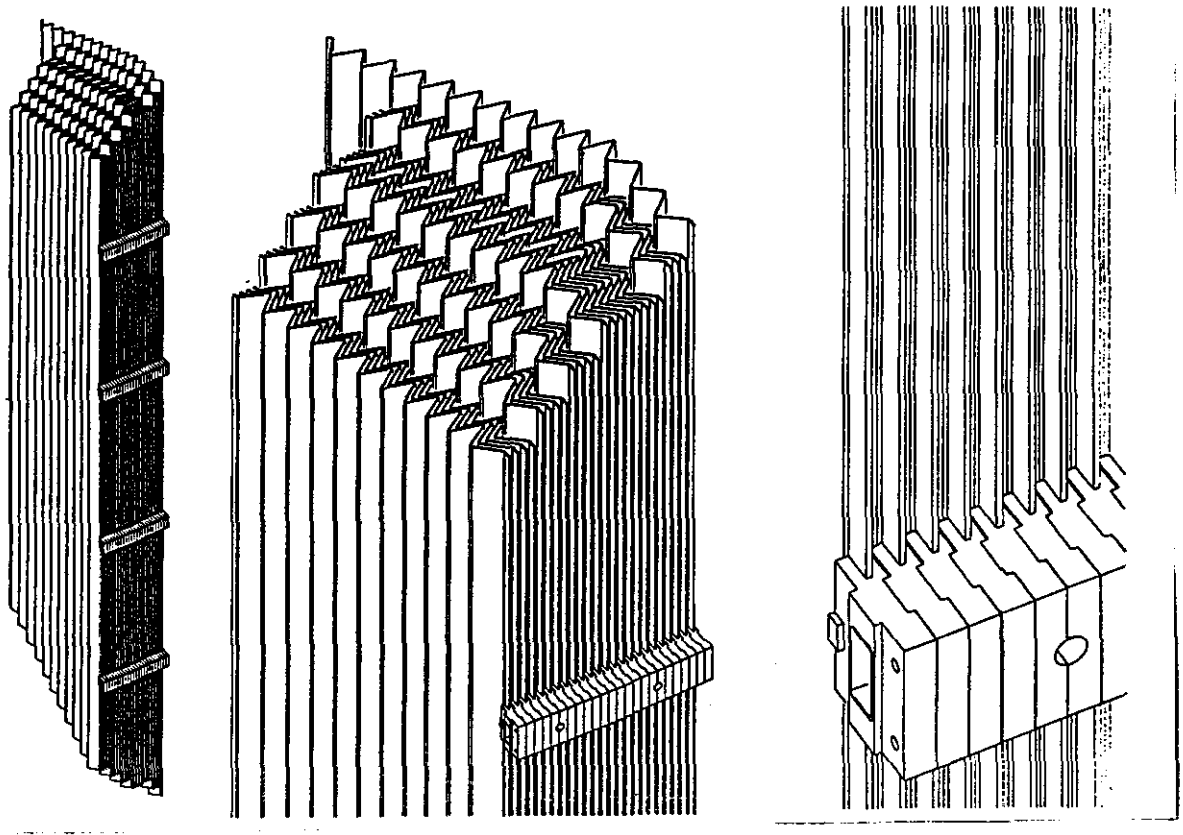

Figure 3.4-2 Typical EM Module (Rear View)

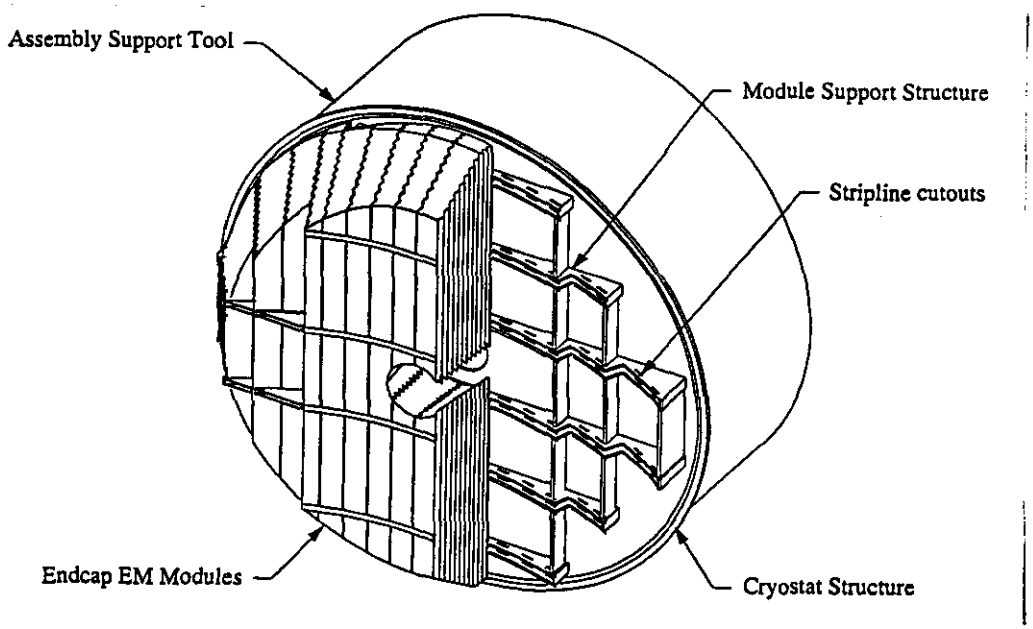

Figure 3.5-1 Endcap EM Monolith Support Structure

3.6 Endcap EM Monolith Support Within the Cryostat Liquid Vessel

The support concept for the accordion plates in the Endcap EM is illustrated in Figure 3.6-1. Vertical Support is provided at the highest support (A in Fig 3.6-1). Radial support is provided at the highest and lowest supports to provide the maximun moment capability (A and B in Fig 3.6-1). Out-of-plane support is provided in all the support locations to stabilize the accordion plates (A, B and C in Fig 3.6-1). The design accomplishes this by using inner and outer spacers very similar to the spacers that are used in the Barrel EM. The spacers in front stabilize the absorber plates within a module and also between modules. All spacers within a module are shaped such that each fits into the next spacer and provide shear and moment transfer between the individual absorber plates. The Signal Electrode is captured between the spacers to provide accurate alignment (Fig 3.3.1-1). The spacers between modules will not transfer vertical shear so that each module only needs to support its own weight. The spacers on the back surface are also very similar to the inner spacers in the Barrel EM including space for an internal channel and threaded inserts (Fig 5.1-4). This combination of spacers, channel, and threaded inserts is necessary to bolt the Endcap EM Modules to the Module Support Structure (Fig 3.4-2 and Fig 3.5-1). Only the highest horizontal brace of the support structure that the module is attached to is designed to carry the weight of the module.

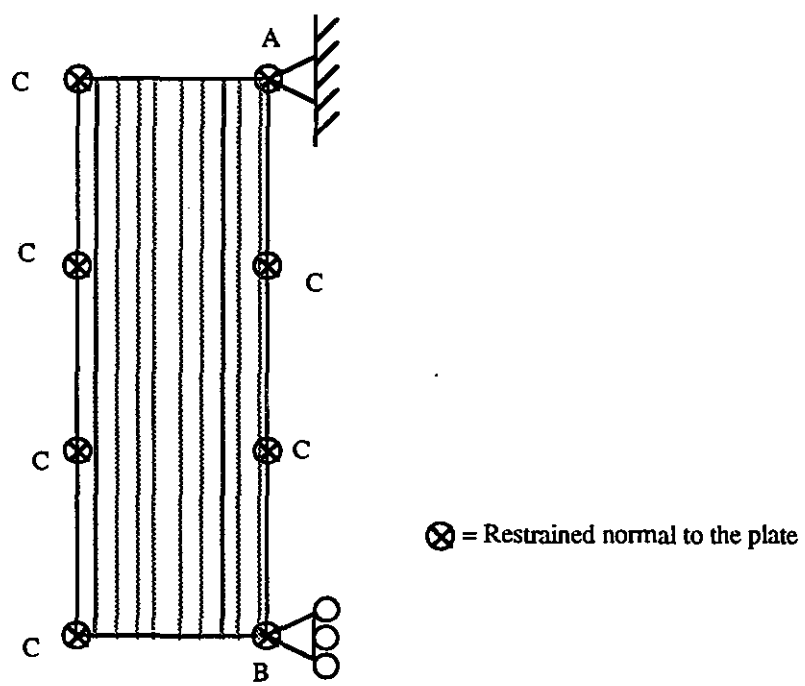

Figure 3.6-1 EM Assembly Support Concept

4.0 STRUCTURAL ANALYSIS

The EM Endcap Assembly consists of 186 absorber plates and 185 signal electrodes held structurally together as a monolith by tie-rods located within the spacers on the inner and outer radius. The Assembly must have structural integrity when subject to gravity loading during assembly and operation and when subject to thermal cool down during operation. Structural integrity is defined as precluding excessive deflections, stresses or loss of stability. Validation of the structural integrity of the Endcap EM Accordion requires detailed 3-D finite element models of the absorber plates, spacers, and tensioning tie-rods.

In preparation for development of the 3-D finite element assembly models, simplified finite element models were developed to determine the structural behavior of the absorber plate in the EM Endcap Accordion. A description of the simplified models and the analyses results are presented in the following sections.

4.1 Absorber Plate Deflection Subject to Gravity Loading

As a first step in demonstrating the structural integrity of the Endcap EM Accordion design, the behavior of a single absorber plate was examined. Since many of the plates have different heights, only the tallest plate was analyzed as a worst case scenario. The plate was modeled using parabolic shell elements. The dimensions of the plate and the support conditions are shown in Figure 4.1-1 and the absorber plate lay-up is shown Figure 4.1-2. The material properties used for the absorber plate are given in Table 4.1-1.

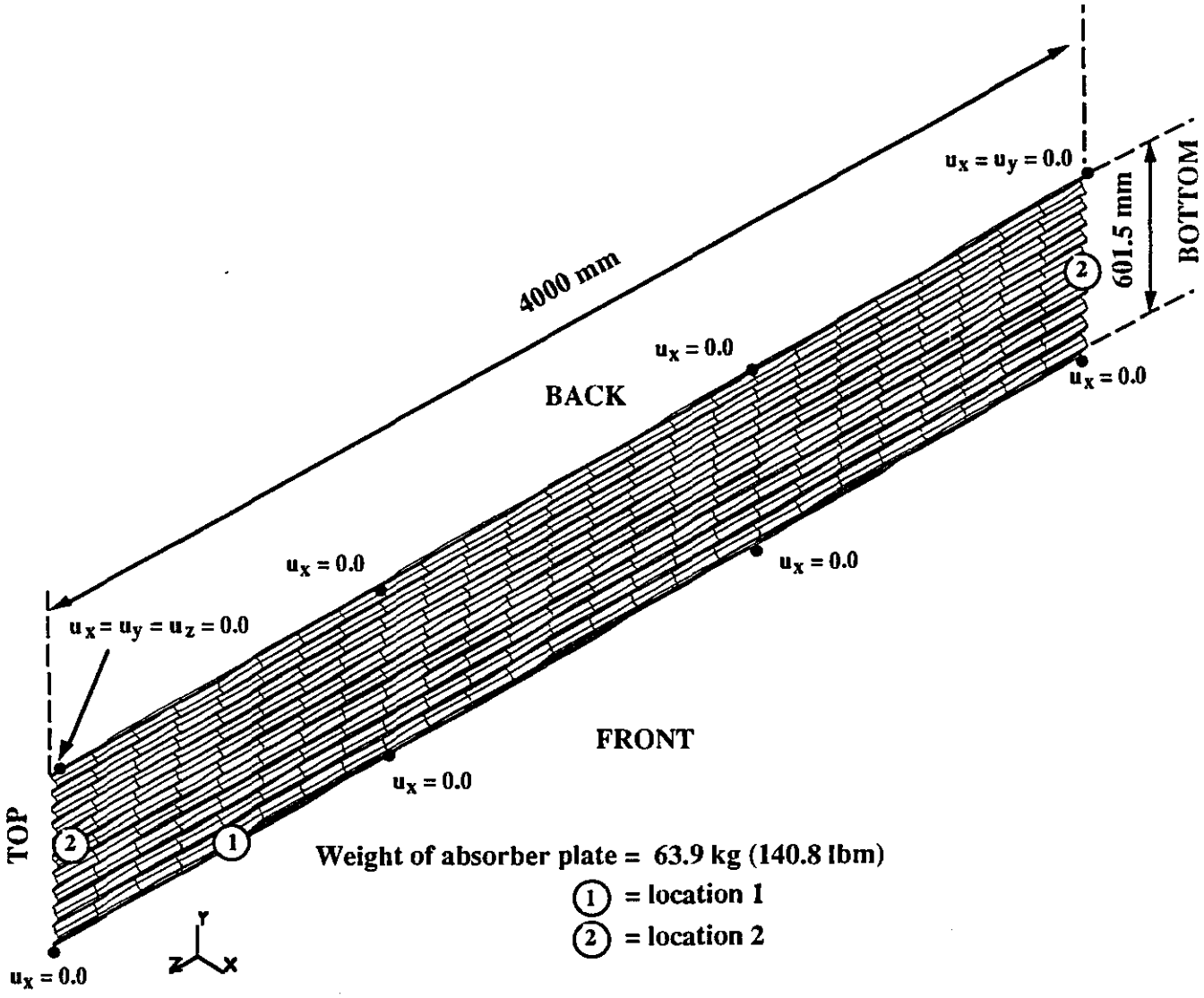

Figure 4.1-1 EM Absorber Plate Geometry

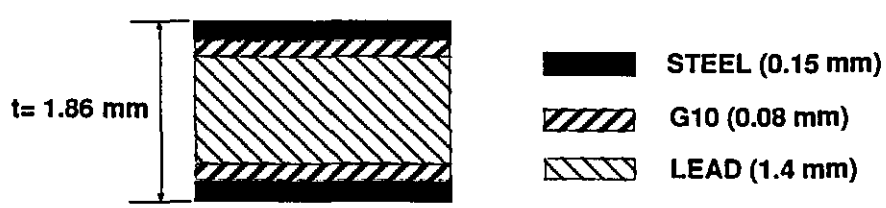

Figure 4.1-2 EM Absorber Plate Lay-up

Table 4.1-1 EM Absorber Plate Structural Properties

Material	Modulus of Elasticity MPa (psi) 10^6	Poisson's Ratio	% ΔL/L (293°K - 77°K)

	E	$E_\perp$	ν	$\nu_\perp$	α	$\alpha_\perp$
STEEL	0.2 (30)	0.2 (30)	0.272	0.272	0.281[1]	0.281[1]
G10	0.03 (4.4)	0.01(1.47)	0.187	0.3	0.112	0.525
LEAD	0.018(2.6)	0.018(2.6)	0.44	0.44	0.586[2]	0.586[2]

Notes: 1. property (Reference 1) for SS301, 302, 303, 304L, 316, 321 and 347 stainless steel
2. property (Reference 1) for pure lead

A gravity load was applied in the long plane of the plate (1.0 G, -z direction) and the maximum deflection in the load direction(z direction) and normal to the load(x direction) was calculated(location 1 and 2, respectively), as shown in Figure 4.1-1. Also, A gravity load was applied in the normal to the plate(1.0 G, -x direction) and the maximum deflection (x direction)was calculated(location 2), as shown in Figure 4.1-1. The plate was supported at the spacer locations which exist at the inner and outer radius.

Table 4.1-2 EM Absorber Plate Subject to Gravity - Analysis Results

Gravity Load (1.0 G)	Deflection (mm)	
	δ_x	δ_z
x direction	14.34	n/a
z direction	0.98	1.03

The analysis results show that a gravity load applied in the z direction also produces a deflection normal to the plate (x direction). This is a result of the support conditions not being applied at the neutral axis.

4.2 Absorber Plate Thermal Cool Down

4.2.1 Experimental and Analytical Determination of Thermal Cool Down of an Equal Bend Absorber Plate

Analytical and experimental data of an equal bend absorber plate supported only at the outer edge were compared to validate the analytical model used in predicting the behavior of accordion plates subjected to thermal cool down. The plate geometry and construction is shown in Figures 4.2.1-1 and 4.2.1-2, respectively.

The test consisted of measuring the room temperature lengths between pins located in the plate (A and B in Fig. 4.2.1-1), submerging the plate in liquid nitrogen (LN_2), and remeasuring the lengths between the pins while in the LN_2. The test results are presented in Table 4.2.1-1.

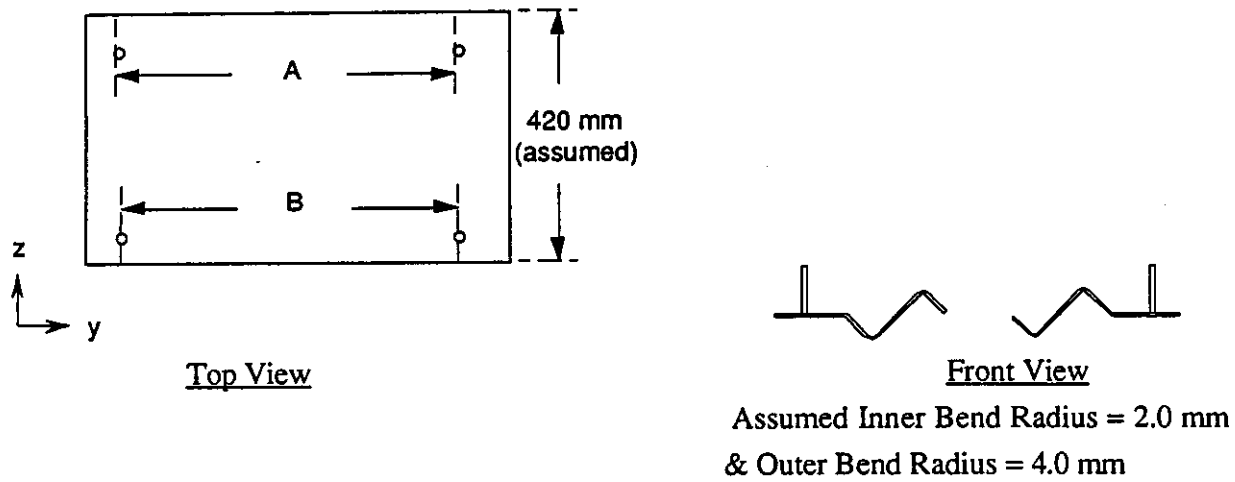

Figure 4.2.1-1 Equal Bend Absorber Plate Geometry

Figure 4.2.1-2 Equal Bend Absorber Plate Lay-up

Table 4.2.1-1 Equal Bend Absorber Plate Thermal Contraction - Test Results

Temp (K)	Length A (mm)	Length B (mm)
293	472.27	470.43
77	469.11	467.55

The edge supported absorber plate was modeled using plane stress, plane strain, and 3-D elements. The thermal contraction was computed and the results compared to the test data (Table 4.2.1-2). The thermal contraction computed from the plane stress and plane strain analysis bounded the test results. However, the thermal contraction calculated from the 3-D analysis correlated well with the test results.

Because of the scatter in the coefficient of thermal expansion data for G10 (Ref. 1), analyses were performed to determine the influence of this scatter on the thermal contraction of the

Table 4.2.2-1 EM Absorber Plate Thermal Contraction - Analysis Results

Thermal Deflection (77K- 293K)	3-D Analysis mm	Thermal Expansion (77K- 293K)	3-D Analysis %
δ_x	3.7	$(\Delta L/L)_x$	0.615
δ_y	2.14	$(\Delta L/L)_y$	n/a
δ_z	0.95[1]	$(\Delta L/L)_z$	0.379

Note: 1. based on width of the absorber plate = 250 mm

The in-plane thermal expansion, $(\Delta L/L)_x$ and $(\Delta L/L)_z$, of the EM absorber plate is nearly identical to that of the equal bend absorber plate. The most significant difference is that the EM absorber plate has an out-of-plane deflection, δ_y, due to lack of symmetry of the bend angles. The deformation (exaggerated) of the EM absorber plate is shown in Figure 4.2.2-1.

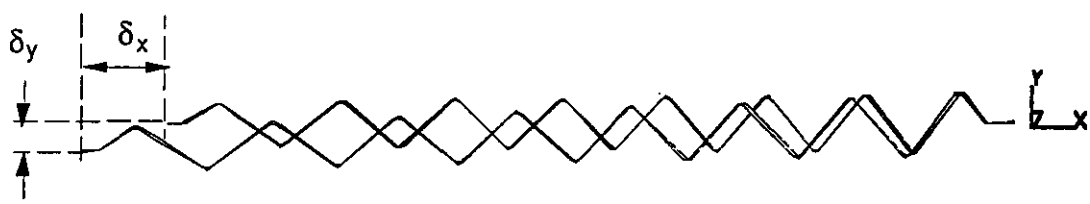

Figure 4.2.2-1 EM Absorber Plate Deformation

4.3 Future Structural Analysis

So far only a preliminary analysis has been performed on the Endcap EM Accordion. To gain an understanding of the structural interaction of the various components that make up the accordion, detailed 3-D finite element models are required of the absorber plates, the spacers and the support structure. These models will be used to determine the failure modes of the components when subject to gravity load and thermal cool down for assembly and operation scenarios. Analysis will be performed to determine the effects of support structure on the absorber plates. Analysis will also be performed to determine the stability of the absorber plates during assembly and operation. The 3-D finite element models will also be used to determine the effectiveness of the spacers in transferring the radial shear loads. These analysis will provide insight into the structural integrity of the shear tabs. Besides gaining insight into the structural behavior of the components that make up the Endcap EM Accordion, these analysis are required to arrive at a sound engineering design.

plate. The 3-D analysis showed that a factor of 5 increase in the G10 in-plane coefficient of thermal expansion increases the plate thermal contraction by only 5 %.

Due to the symmetric nature of the equal bend absorber plate, thermal contraction was limited to in-plane motion. The deformation (exaggerated) of the equal bend plate due to thermal contraction is shown in Figure 4.2.1-3.

Table 4.2.1-2 Equal Bend Absorber Plate Thermal Contraction Results

Thermal Contraction	Test[1]		Analysis		
	A	B	Plane Stress	Plane Strain	3-D
$(\% \ \Delta L/L)_y$	0.67	0.61	0.53	0.8	0.635 (0.666)[2]
$(\% \ \Delta L/L)_z$	---	---	---	---	0.356 (0.377)

Notes: 1. $(\% \ \Delta L/L)_z$ was not measured
2. α for G10 set to 0.56, $\alpha_\perp$ was not changed

Figure 4.2.1-3 Equal Bend Absorber Plate Deformation

4.2.2 Absorber Plate Thermal Cool Down Analysis

The experience obtained from analyzing the equal bend absorber plate was applied to a thermal expansion analysis of the GEM Endcap EM absorber plate. The purpose of this analysis was to determine the room temperature shape of the absorber plate based on achieving the desired shape at cool down. The solid finite element model of the absorber plate was supported only at the outer radius. The analysis results are shown in Table 4.2.2-1.

Table 4.2.2-1 EM Absorber Plate Thermal Contraction - Analysis Results

Thermal Deflection (77K- 293K)	3-D Analysis mm	Thermal Expansion (77K- 293K)	3-D Analysis %
δ_x	3.7	$(\Delta L/L)_x$	0.615
δ_y	2.14	$(\Delta L/L)_y$	n/a
δ_z	0.95[1]	$(\Delta L/L)_z$	0.379

Note: 1. based on width of the absorber plate = 250 mm

The in-plane thermal expansion, $(\Delta L/L)_x$ and $(\Delta L/L)_z$, of the EM absorber plate is nearly identical to that of the equal bend absorber plate. The most significant difference is that the EM absorber plate has an out-of-plane deflection, δ_y, due to lack of symmetry of the bend angles. The deformation (exaggerated) of the EM absorber plate is shown in Figure 4.2.2-1.

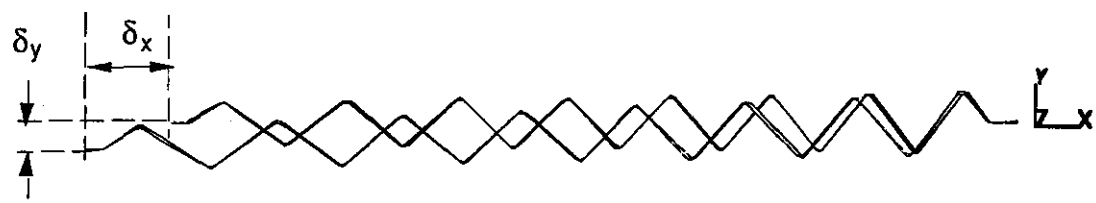

Figure 4.2.2-1 EM Absorber Plate Deformation

4.3 Future Structural Analysis

So far only a preliminary analysis has been performed on the Endcap EM Accordion. To gain an understanding of the structural interaction of the various components that make up the accordion, detailed 3-D finite element models are required of the absorber plates, the spacers and the support structure. These models will be used to determine the failure modes of the components when subject to gravity load and thermal cool down for assembly and operation scenarios. Analysis will be performed to determine the effects of support structure on the absorber plates. Analysis will also be performed to determine the stability of the absorber plates during assembly and operation. The 3-D finite element models will also be used to determine the effectiveness of the spacers in transferring the radial shear loads. These analysis will provide insight into the structural integrity of the shear tabs. Besides gaining insight into the structural behavior of the components that make up the Endcap EM Accordion, these analysis are required to arrive at a sound engineering design.

5.0 MODULE ASSEMBLY

The Signal Electrodes, Absorber Plates and Hexcel Spacers must be assembled into a structurally stable module which can be safely moved for testing and shipment to the SSCL. The mechanical assembly of these components into a module is discussed in the following sections. Cleanliness requirements, testing procedures and other assembly details are discussed in TN–93–326.

5.1 Assembly Process

Modules will be assembled on a table (Fig. 5.1-1) designed to provide support on the inner and outer edges of the absorber plates and signal electrodes. This approach assures that the first and all subsequent absorber plates in the module stack have the same amount of deflection and transmit their weight through the spacers on the inner and outer edges of the absorber plate as designed.

The assembly process is initiated by placing an absorber plate on the assembly table as shown in Figure 5.1-2. This is followed by a layer of Hexcel strips and then a signal electode which is aligned to the aborber plate by keys on the spacers (Fig. 5.1-3) After the fourth absorber plate has been positioned, a channel is placed in the slots in the outer spacers and held in position by a threaded insert (Fig. 5.1-4).

Threaded inserts are used to hold the channel in place and provide a mechanism to bolt the modules to the support structure. Two tie rods, threaded on each end, are inserted in holes provided in each spacer. After a module is completed, nuts with lock washers are placed on the threaded end of the tie-rods to keep the spacers in compression and maintain the structural integrity of the module. In this configuration the module can be handled as a unit using the handling fixtures designed for this purpose (Sect. 6.0).

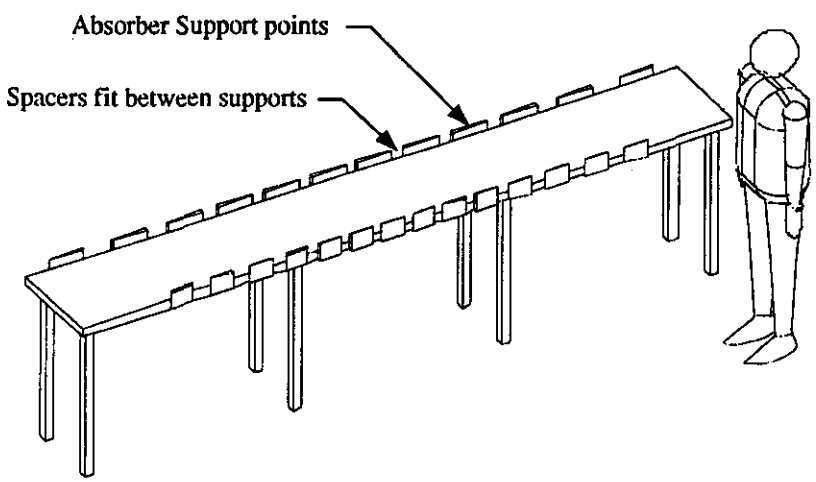

Figure 5.1-1 Module Assembly Table

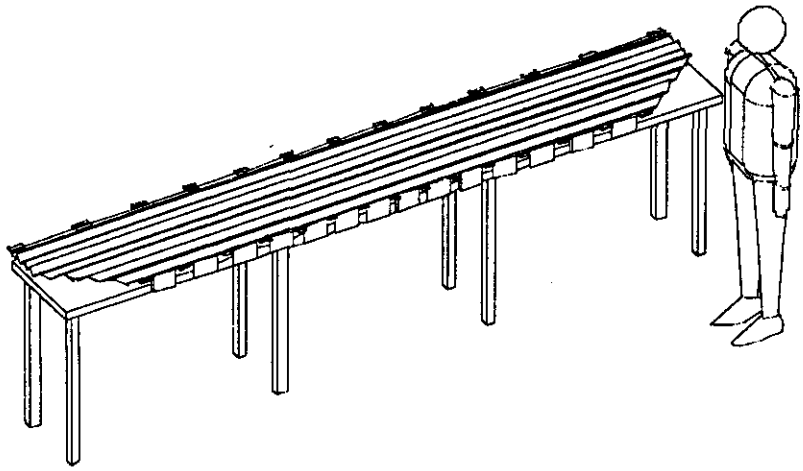

Figure 5.1-2 Absorber Plate on Assembly Table

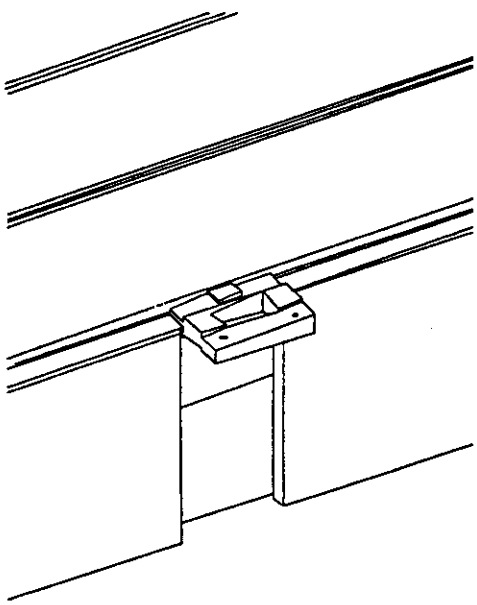

Closeup of Spacer on Absorber Plate

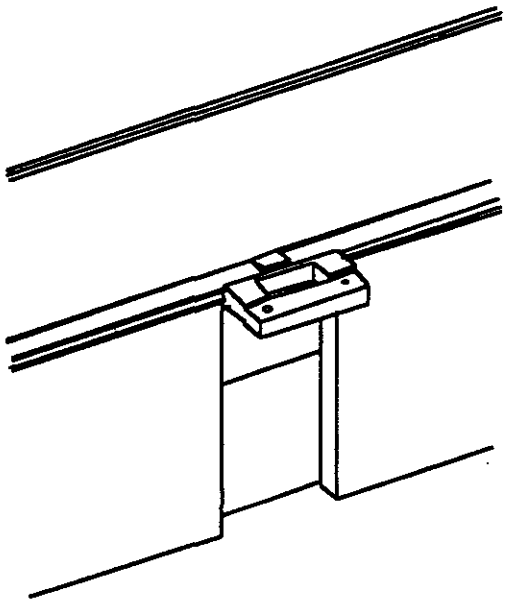

Electrode Alignment Using Key on Spacer

Figure 5.1-3 Signal Eectrode Assembly onto Absorber Plate Spacer

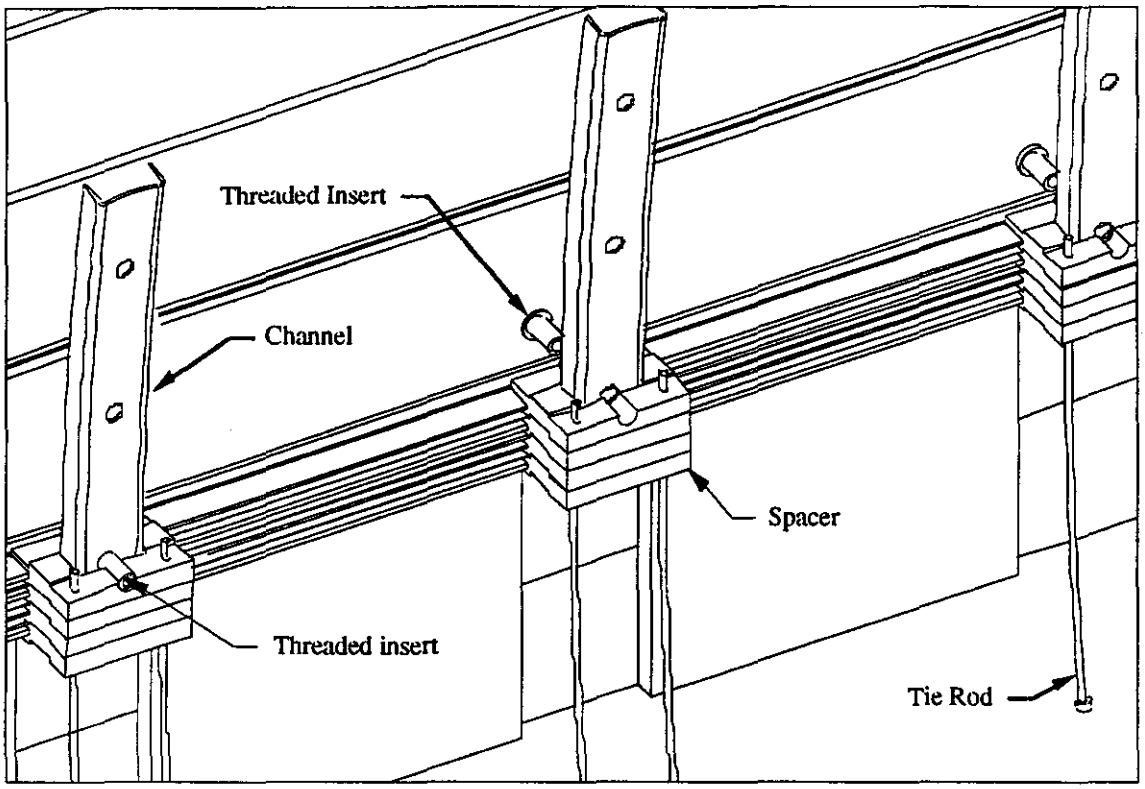

Figure 5.1-4 Channel, Threaded Inserts and Tie Rods Installation

5.2 Protective Absorber Plate

When protection for the exposed signal electrode is required (such as during shipping and testing), one additional absorber plate, not part of the module, can be added to the assembly. (Fig. 5.2-1). It is attached by means of special nuts which penetrate the spacer and engage the threated portion of the tie rods. After arrival at the SSCL and prior to being placed into the Endcap Assembly (Sect. 6.0), this protective absorber plate is removed and the special nuts are replaced with those selected for the permanent installation.

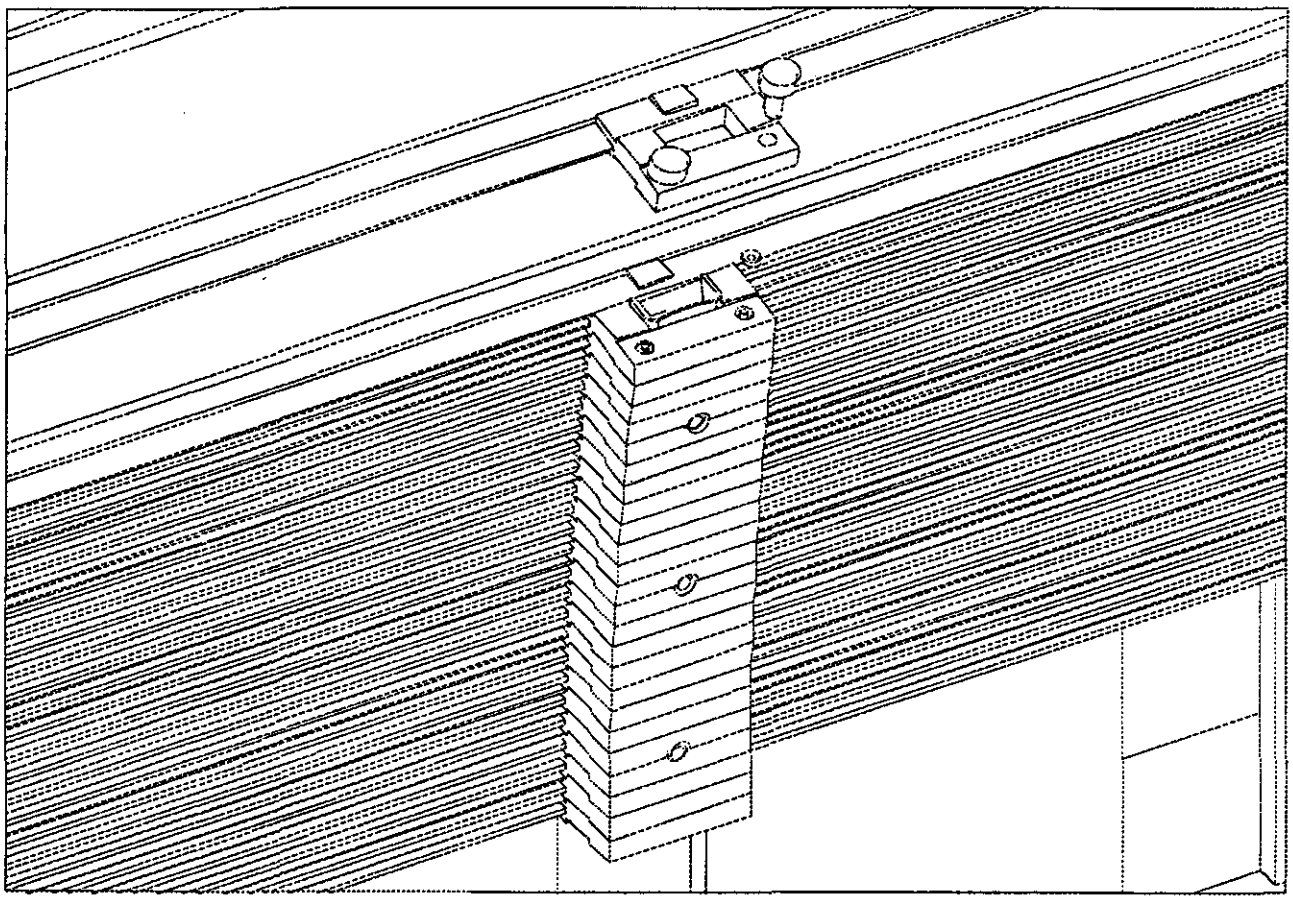

Figure 5.2-1 Attachment of Protective Absorber Plate

6.0 MONOLITH ASSEMBLY

Upon arrival at the SSCL each module is removed from the shipping container, visually inspected for damage, electrically tested, cold tested and stored until needed for Endcap Calorimeter Assembly. The process used to assembly modules into a monolith is discussed in the following sections. The overall process of Endcap Calorimeter Assembly is described in TN93-310.

6.1 Assembly Into Monolith

6.1.1 Removal From Shipping Container and Breakover

The EM Modules are received oriented as shown in Figure 6.1.1-1. Upon removal from their individual shipping containers Lifting Slings are attached to each end, Side Clamps are added to secure the module and to enhance side load capability and two Sling Strong Backs are attached

to eliminate sling induced bending during rotation and Breakover. Rotation is initiated by attaching hoists to the rotation Clevis and lifting the module to sufficient height above the work surface. The locking pins in the Clevis are released and the module is rotated 90 degrees into the Breakover Orientation. This fixture allows rotation and locking in any orientation about the long axis and may lend itself to test applications.

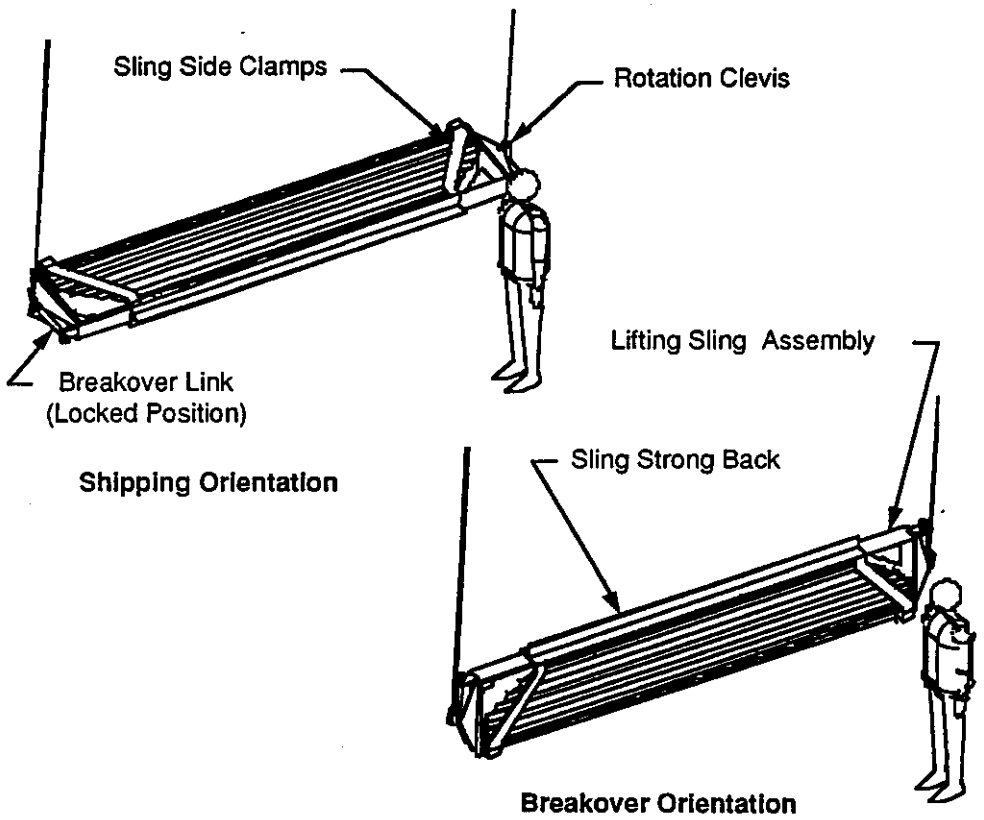

Fig 6.1.1-1 Module Shipping and Breakover Orientation

Upon removal of clamps and strong backs and attaching hoists to the breakover links, the module is ready for Breakover. The Breakover Sequence is as shown in Figure 6.1.1-2. This requires either two hoists or a single hoist with a long spreader beam.

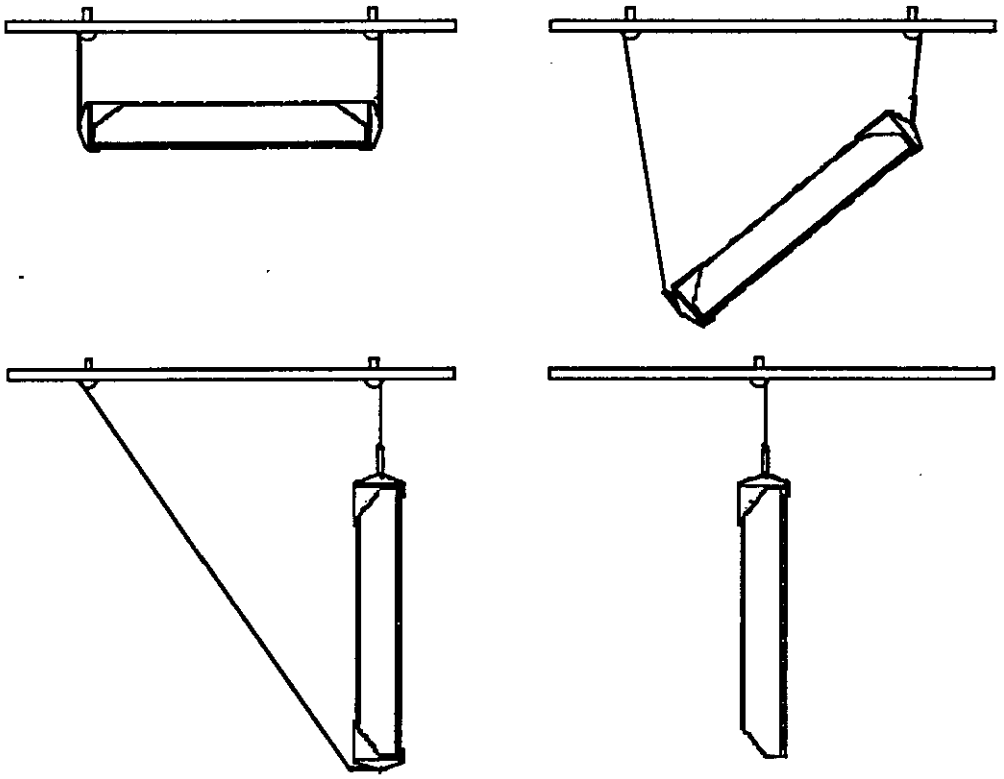

Fig 6.1.1-2 Breakover Sequence

EM Modules are positioned as shown in Figure 6.1.2-1 onto the module support structure and secured to the support structure at the individual module extremes. Once the Module is secured, the Lifting Sling is removed and the entire procedure beginning with removal from the shipping container is repeated eighteen times for each endcap monolith. The sequence begins with the lower center modules, is then followed by the upper center modules and completed by progressively installing the modules away from the center. Figure 6.1.2-2 shows the location of inner and outer structural spacers/bands that hold the modules together as a monolith in its installed condition.

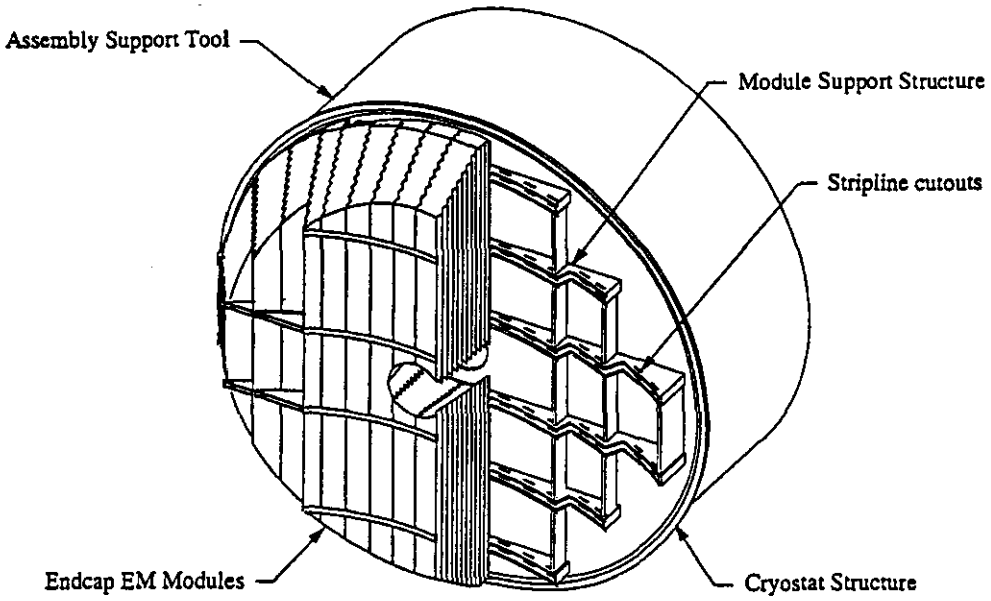

Fig 6.1.2-1 Module Installation Onto Support Structure

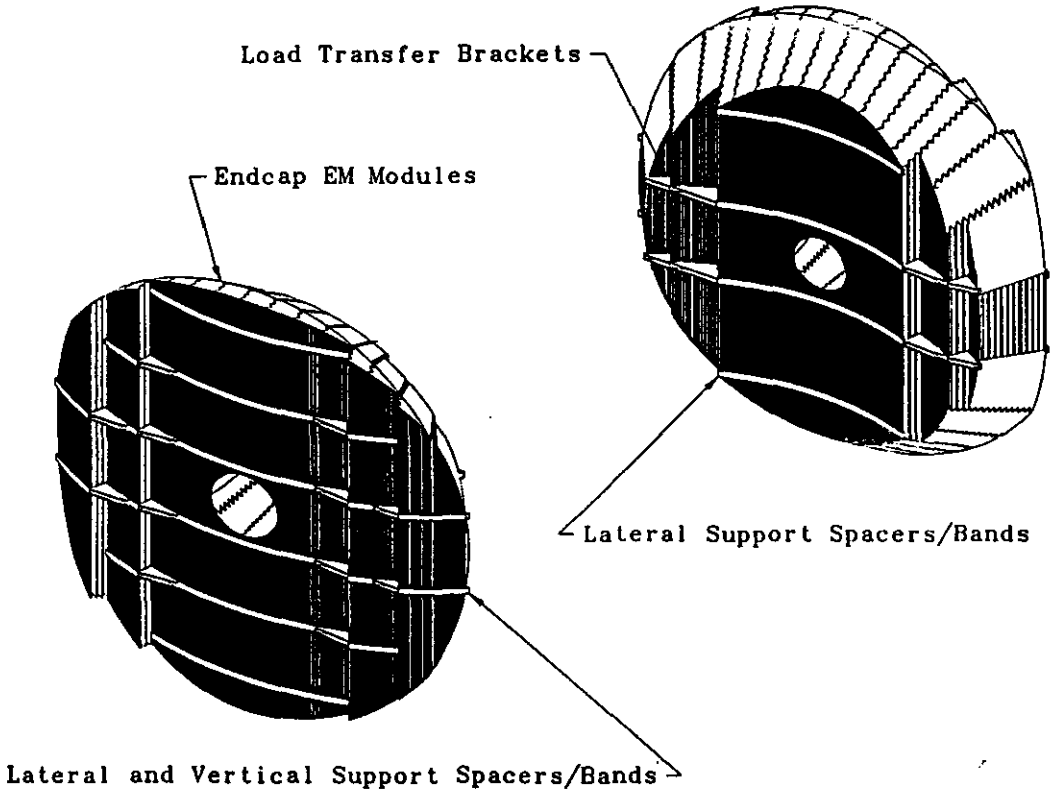

Fig 6.1.2-2 Assembly Showing Spacer/Band Locations