GEM TN-93-320

GEM Noble Liquid Calorimeter Inner Barrel EM Calorimeter Structural Design Concept

Brian Easom
Rich Hund
Mark Lajczok
Martin Marietta Science System

May 6, 1993

Abstract:

The noble liquid calorimeter, an integral part of the overall GEM Calorimeter (Figure 1-1), includes inner barrel and endcap subsystems with electromagnetic (EM) calorimetry. The inner barrel provides axisymmetric coverage along the z-axis of the detector. The structural design concept for the EM calorimetry, located within the barrel cryostat, is discussed in this report and the endcap EM calorimetry is discussed in GEM TN-93-321.

CONTENTS

Page

1.0 INTRODUCTION 1

2.0 STRUCTURAL REQUIREMENTS 1

2.1 Cell Requirements 1

2.2 Absorber Plate and Signal Electrode Requirements 2

2.3 Module Requirements 3

2.4 Electronic Segmentation 3

2.5 Material Selection Criteria 3

2.6 Thermal Expansion and Contraction Requirements 3

3.0 STRUCTURAL DESIGN CONCEPT 3

3.1 Overall Size and Mass 3

3.2 Cell Structure 4

3.3 Accordion Structure 5

3.4 Module Structure 6

3.5 Barrel Structure 7

3.6 EM Barrel Assembly Support Within the Cryostat Liquid Vessel 9

4.0 STRUCTURAL ANALYSIS 9

4.1 Absorber Plate Deflection Subject to Gravity Loading 10

4.2 Absorber Plate Thermal Cool Down 12

4.2.1 Experimental and Analytical Determination of Thermal Cool Down of an Equal Bend Absorber Plate 12

4.2.2 Absorber Plate Thermal Cool Down Analysis 14

4.3 Spacer/Absorber Plate Interface Under Gravity Loading 15

4.4 Barrel EM Accordion Structural Analysis 17

4.5 Future Structural Analysis 20

5.0 MODULE ASSEMBLY 20

5.1 Assembly Sequence 20

5.2 Protective Absorber Plate 23

6.0 BARREL ASSEMBLY 23

6.1 Assembly Into Two Halves 24

6.2 Assembly of Two Halves Into 2π EM Barrel Assembly 27

Figure **Page**

1-1 GEM Calorimeter Concept....1
2.1-1 Spacing and Material Requirements for the EM Cells....2
2.1-2 EM Absorber Accordion Configuration at LKr Temperature (120 K)....2
3.1-1 Barrel EM Active Region at LKr Temperature....4
3.3.1-1 EM Absorber Accordion Configuration at Room Temperature....5
3.3.1-2 EM Module Inner Spacer Attachment....6
3.3.1-3 EM Absorber Plate Cold Configuration Spacer Locations....7
3.4-1 EM Module Inner and Outer Tension Band Support/Axial Restraints....8
3.5-1 Barrel EM Structural Assembly With Tensioning Bands Installed....8
3.6-1 EM Assembly Support Concept....9
3.6-2 EM Assembly Central Support Concept....10
4.1-1 EM Absorber Plate Geometry....11
4.1-2 EM Absorber Plate Lay-up....11
4.2.1-1 Equal Bend Absorber Plate Geometry....13
4.2.1-2 Equal Bend Absorber Plate Lay-up....13
4.2.1-3 Equal Bend Absorber Plate Deformation....14
4.2.2-1 EM Absorber Plate Deformation....15
4.3-1 EM Spacer/Absorber Plate Interface Geometry....15
4.4-1 EM Absorber Plate Lay-up....18
4.4-2 EM Accordion Deflection – 45 Support....18
4.4-3 EM Accordion Deflection – 90 Degree Support....19
5.1-1 Module Assembly Table....21
5.1-2 Absorber Plate on Assembly Table....21
5.1-3 Signal Electrode Assembly Onto Absorber Plate Spacer....22
5.1-4 Channel, Threaded Insert, and Tie Rod Installation....22
5.2-1 Attachment of Protective Absorber Plate....23
6.1.1-1 Module Shipping and Breakover Orientation....24
6.1.1-2 Breakover Sequence....25
6.1.2-1 Secure Module to Integration Fixture....26
6.1.2-2 Assembly of 1π Section....26
6.2-1 Mating of 1π Sections....27

Table **Page**

2.4-1 Electromagnetic Segmentation and Depth Requirements....3
4.1-1 EM Absorber Plate structural Properties....11
4.1-2 EM Absorber Plate Subject to Gravity – Analysis Results....12

4.2.1-1 Equal bend Absorber Plate Thermal Contraction – Test Results 13
4.2.1-2 Equal Bend Absorber Plate Thermal Contraction Results..... 14
4.2.2-1 EM Absorber Plate Thermal Contraction Analysis Results..... 14
4.3-1 EM Spacer/Absorber Plate – Analysis Results 16
4.4-1 EM Accordion/Cryostat Cross Sectional Properties 17
4.4-2 EM Absorber Plate Effective Beam Properties 17
4.4-3 EM Accordion Effective Beam Analysis Results..... 19

1.0 INTRODUCTION

The noble liquid calorimeter, an integral part of the overall GEM Calorimeter (Figure 1-1), includes inner barrel and endcap subsystems with electromagnetic (EM) calorimetry. The inner barrel provides axisymmetric coverage along the z-axis of the detector. The structural design concept for the EM calorimetry, located within the barrel cryostat, is discussed in this report and the endcap EM calorimetry is discussed in TN903–321.

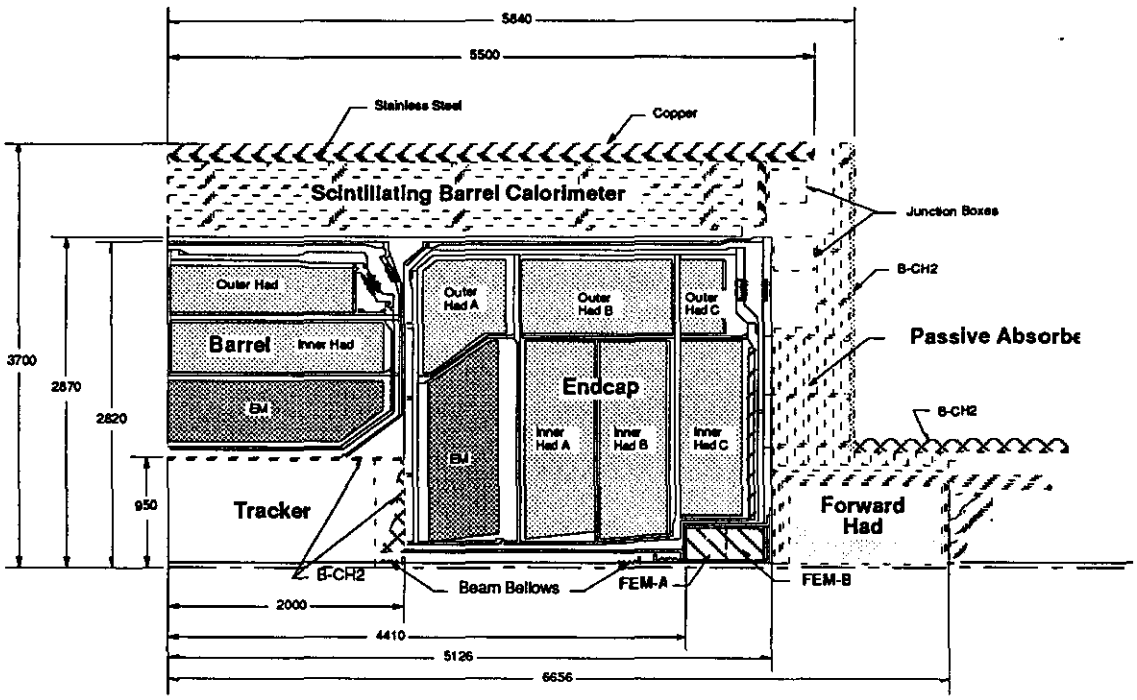

Figure 1-1 GEM Calorimeter Concept

2.0 STRUCTURAL REQUIREMENTS

The structural requirements for the barrel EM calorimetry have been developed through an iterative concept development process intended to maximize the achievement of physics goals. Since the structural or engineering requirements were considered in parallel with the physics goals, a relatively low risk structural design approach has evolved. The structural design requirements derived from the physics objectives are presented in the following sections.

2.1 Cell Requirements

The EM calorimetry shall include signal electrodes and absorbers with the cell spacing and materials specified in Figure 2.1-1. Signal electrodes and absorbers shall be designed using the accordion concept and shall have the configuration shown in Figure 2.1-2 for the absorber at LKr temperature. These requirements assure a constant sampling fraction and uniform density in the calorimeter by retaining near constant gap between absorbers and signal electrodes for all radial

locations. They also provide an integer number of cells (960) in 2π and permit the accordion bends to transition through 90 degrees near the mid radial location in the calorimeter. Finally, these requirements assure that projective paths from the interaction point will pass through four absorber plates and four signal electrodes.

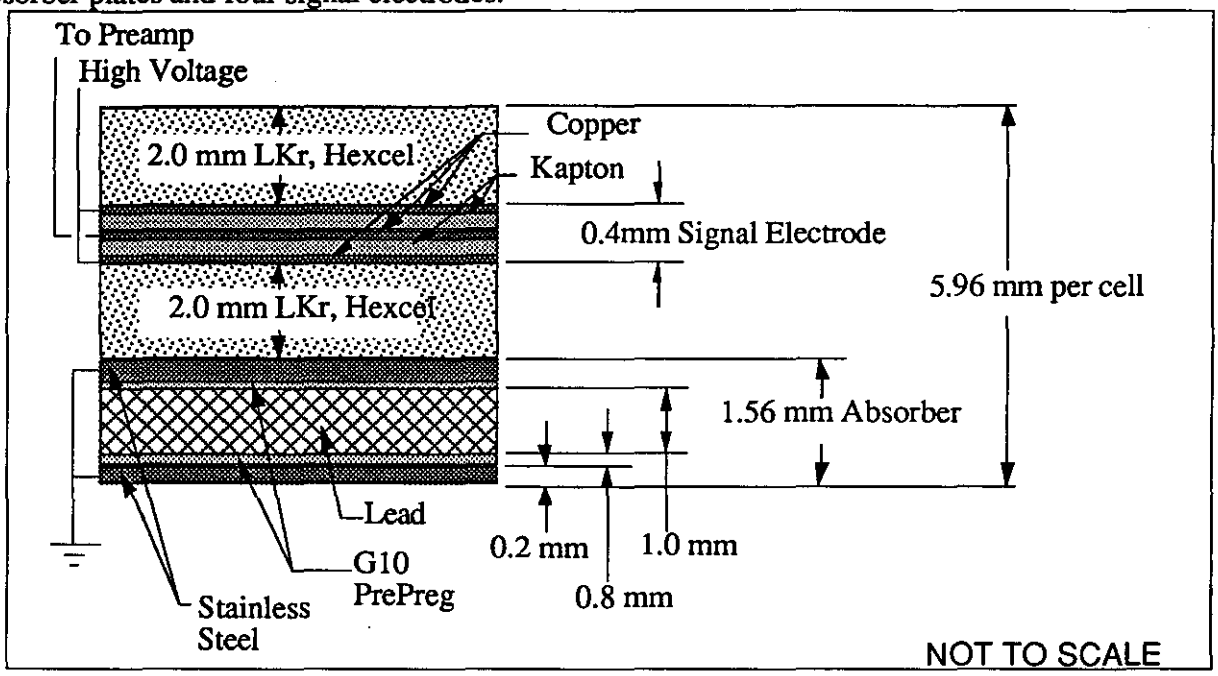

Figure 2.1-1 Spacing and Material Requirements for the EM Cells

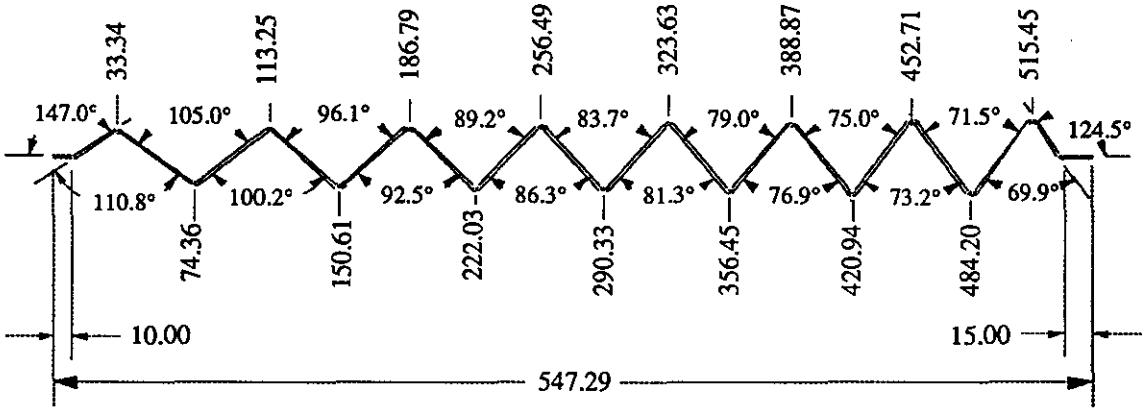

Figure 2.1-2 EM Absorber Accordion Configuration at LKr Temperature (120K)

2.2 Absorber Plate and Signal Electrode Requirements

The signal electrodes and absorbers shall be designed for assembly into modules. The signal electrodes and absorbers shall be structurally continuous in the z- and r-directions. Out-of-plane deflection of the absorbers and signal electrodes shall not exceed 3 mm when installed.

2.3 Module Requirements

Modules shall contain 24 signal electrodes and 24 absorbers which combine to span 9 degrees in ϕ (phi), requiring a total of 40 modules for the complete EM barrel section. Modules shall be structurally stable after assembly to permit transportation and handling associated with testing, shipment to the SSCL from the fabrication site, and assembly into the Inner Barrel Calorimeter at the SSCL.

2.4 Electronic Segmentation

The structural design shall be compatible with the signal electrode segmentation requirements defined in Table 2.4-1.

Table 2.4-1 Electromagnetic Segmentation and Depth Requirements

Segmentation			Active Depth
Depth Segment	$\Delta\eta$	$\Delta\phi$	$24\ X_0$ at $\eta = 0$
1	0.00436	0.157	$24\ X_0$ at $\eta = 1.1$
2	0.026	0.026	$\lambda_I \geq 1.3$ for $0 < \eta < 3$
3	0.026	0.026	

2.5 Material Selection Criteria

The materials selected for the barrel EM calorimetry shall satisfy all structural requirements at both room and LKr temperatures, withstand the radiation environment (2×10^6 Gray), and introduce no contaminants to the ionizing fluid (LKr).

2.6 Thermal Expansion and Contraction Requirements

The EM calorimetry shall be designed to permit thermal expansion and contraction of the inner barrel cryostat without introducing unplanned stresses and/or deformation of calorimeter components as a result of contact between the cryostat liquid vessel and the active components. Adequate clearance shall be maintained between the active components and the cryostat liquid vessel to assure adequate space for mother boards, cooling tubes, and strip lines.

3.0 STRUCTURAL DESIGN CONCEPT

3.1 Overall Size and Mass

The active region of the EM calorimetry, determined by the electronic design of the signal electrodes, is illustrated in Figure 3.1-1. The structure of the absorbers and signal electrodes

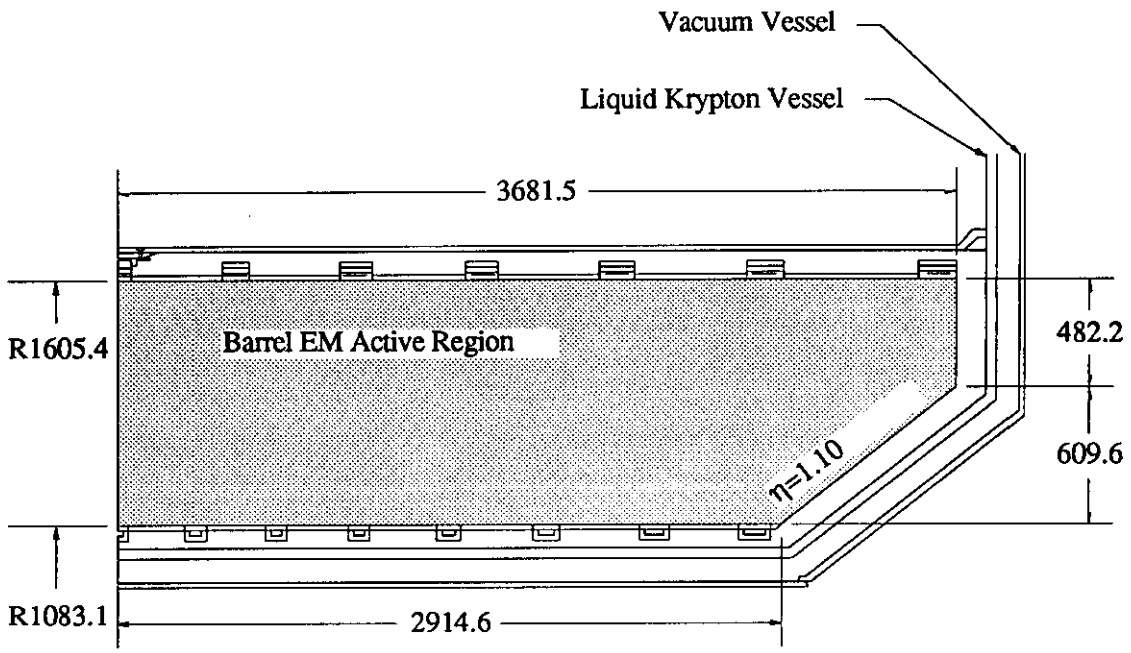

Figure 3.1-1 Barrel EM Active Region at LKr Temperature

extends approximately 10 – 15 mm outside the active area. This configuration provides a electromagnetic coverage over the range $\eta = \pm 1.10$ and a depth , X_O, of 24 at $\eta = 1.10$. The total mass of the EM barrel section is 63.5 Mg.

The space between the EM accordion structure and the cryostat liquid vessel wall (Fig. 3.1-1) was selected to provide clearance for mother boards, cooling tubes, striplines, and a convective cooling flow path that assures adequate mother board cooling and proper temperature distribution within the cryostat (TN-93-316). Support of the accordion structure within the cryostat is discussed in Section 3.6.

3.2 Cell Structure

In compliance with the requirements each cell (the basic repeating element) consists of a 1.56 mm absorber plate, a 0.4 mm signal electrode and two 2.0 mm Liquid Krypton gaps for a total cell depth of 5.96 mm (Fig. 2.1-1). The absorber is kept at ground potential while a high voltage is applied to the outer surfaces of the signal electrode. The conductive layer in the center of the signal electrode is capacitively coupled to the high voltage on the surface and is the sensed layer that is connected to the preamps. Hexcel™ strips are placed in the LKr space to maintain a minimum gap between the high voltage and ground. The cells are formed as the modules are assembled.

3.3 Accordion Structure

3.3.1 Absorber Plate

The room temperature configuration of the absorber plate that satisfies the required cold configuration (Figure 2.1-2) is illustrated in Figure 3.3.1-1. This configuration was developed from the cold configuration using a finite element analysis model (Section 4).

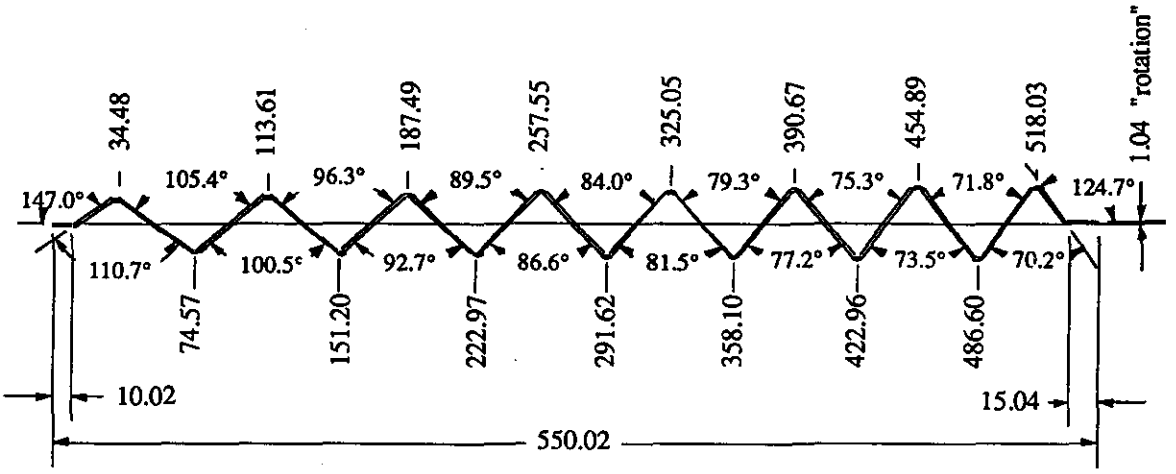

Figure 3.3.1-1 EM Absorber Accordion Configuration at Room Temperature

The differing coefficients of thermal expansion of the materials in the absorber plate combined with the small bend radius relative to the plate thickness result in a radial coefficient of thermal expansion that is larger than either lead or stainless steel. In the transition from room to LKr temperature the accordion plate not only gets 2.73 mm shorter, it also deflects 1.04 mm due to rotation at the inner radius.

After each accordion absorber plate is bent and pressed to the accordion configuration at room temperature, fifteen spacers (Figure 3.3.1-2) are bonded to the inside inner edge and thirteen to the outer edge. The location of these spacers are centered on the boundary of every sixth readout tower or every 0.157 units of pseudorapidity, η (Figure 3.3.1–3). The width of the spacers increases as the distance between spacers increases such that the spacers support the absorber plate over approximately 25% of the length. This support configuration was chosen as a compromise that yields minimal deflections, leaves no inactive structure inside the active region of the EM Module, and allows room for motherboards and electronics between the spacers. Each signal electrode is aligned by a key on the spacer, and each spacer keys into the spacer of the next absorber plate.

3.3.2 Signal Electrode

The Signal Electrode cold shape will be identical to that of the Absorber Plates to assure proper spacing and stacking in the EM Module. The warm shape for the Signal Electrode which

will satisfy the cold configuration has not been analyzed to date. However, it is believed to be less critical than the Absorber Plate which is the primary structural member and which will dominate the thermal shrinkage process. Care must be taken to assure that the Hexcel spacers are not crushed during thermal cool down, destroying the critical cell spacing.

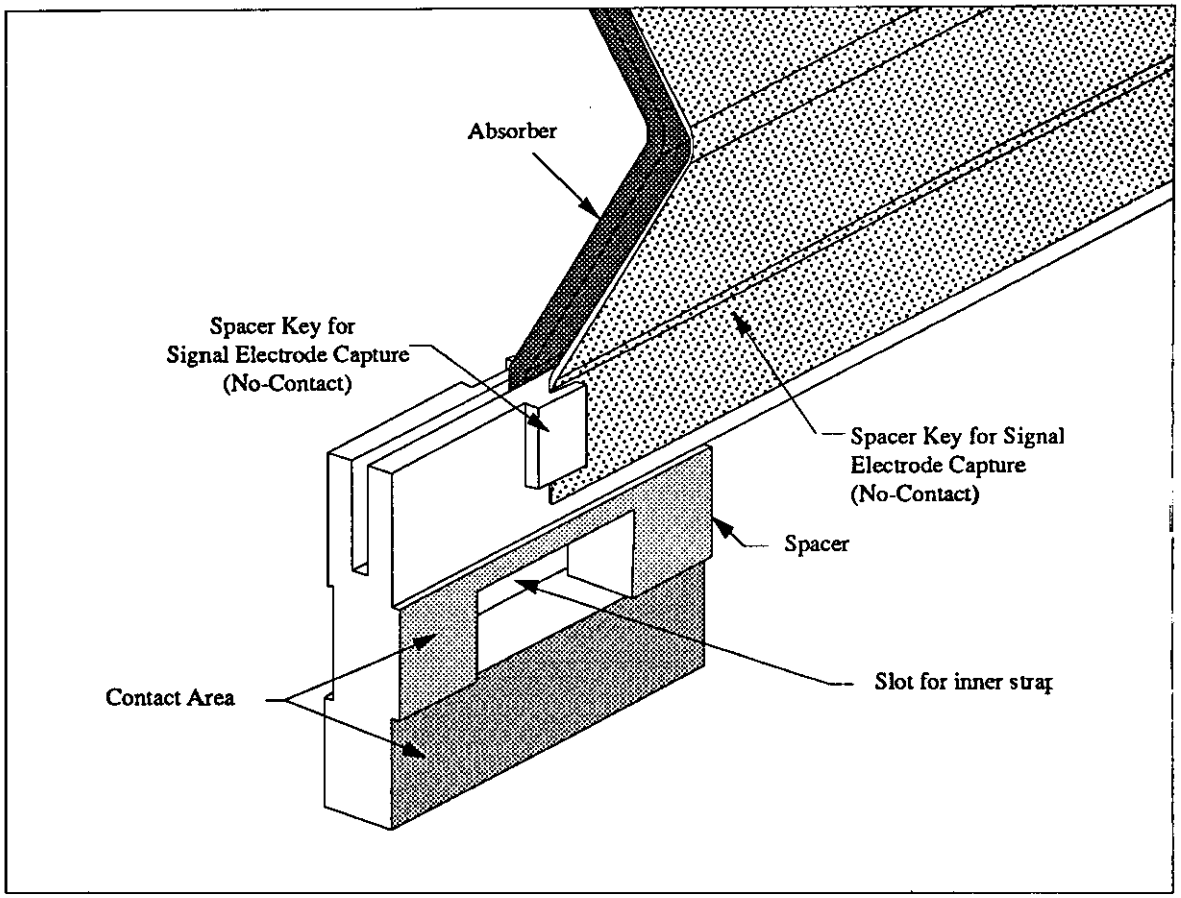

Figure 3.3.1-2 EM Module Inner Spacer Attachment

3.4 Module Structure

Twenty four absorbers and twenty four signal electrodes placed side-by-side with Hexcel spacers constitute the EM Module. Each signal electrode is aligned by a key on the spacers which are designed to align with the spacers on adjacent absorber plates. Structural integrity of the module is provided by the spacers which provide shear continuity in the radial and axial directions and tie rods through the spacers which keep the spacers compressed. The spacers also provide axial restraint and support for the inner and outer tension bands (Fig. 3.4-1).

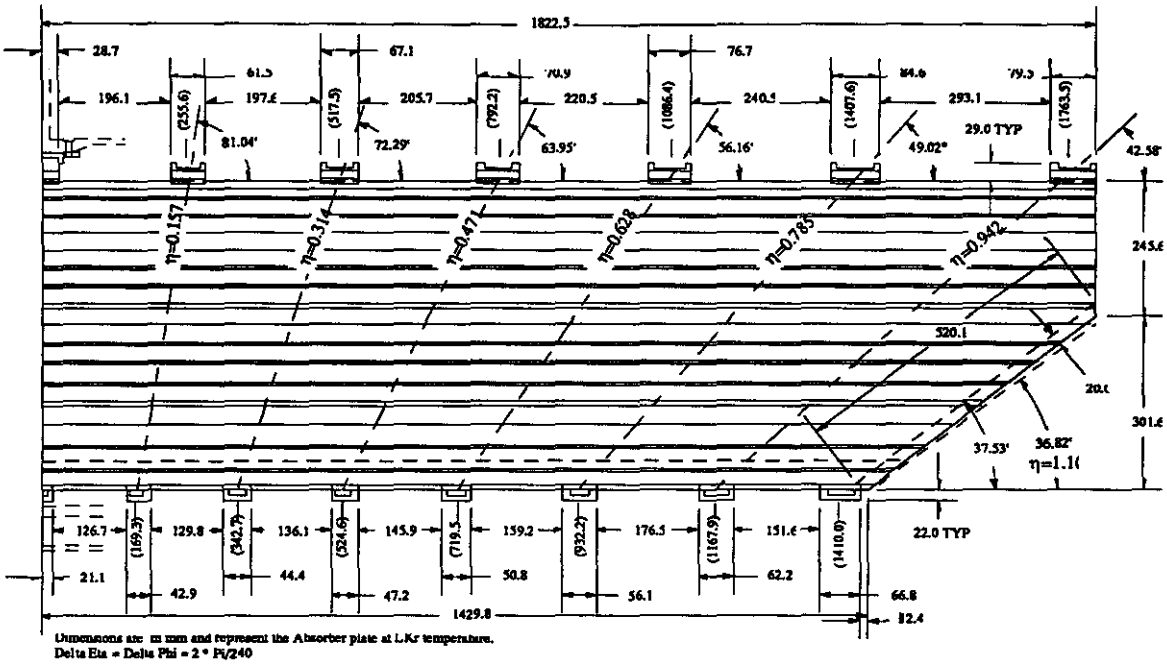

Figure 3.3.1-3 EM Absorber Plate Cold Configuration Spacer Locations

3.5 Barrel Structure

Structural integrity of the EM Barrel is obtained by 15 inner and 13 outer spacer rows that form a structural framework (Figure 3.5-1). Compressed into a ring by means of tension bands at each inner and outer spacer location, these spacers provide both moment capability and shear continuity for individual absorber plates. The moment capability of the spacers provides a "fixed" end condition for each absorber plate. Shear continuity is provided by axial and radial tabs that exist between mating spacers. Vertical support of the barrel assembly is provided by means of support blocks attached to the outer tensioning bands at each end of the barrel assembly and by the center external row of spacers which fit into a u-shaped channel (Section 3.6). The middle outer band also reacts axial barrel loads.

The outer tensioning bands are 5086-H116 aluminum because of its thermal expansion, strength and absorption length characteristics. Proper band tension will be achieved using flanges, shims and threaded fasteners at several locations along the circumference of each band. Preliminary analysis indicates that band tension will vary at different spacer locations, with a maximum tension requirement at the barrel ends. Current band design allows for growth if tension requirements should change.

Titanium was chosen for the inner bands because of its high strength and radiation depth. Two bands at each spacer location are spliced when each of the 1π barrel sections are mated. The joint consists of two splice plates that transfer load through a double shear insert into each mating tension band. A lock screw then secures the shear insert in place. Following the splice operation,

the bands are tensioned by an ordered tightening of the preload screws. The screws react against the tension band in one direction and against a nut, channel and spacer combination in the other. As with the outer bands, tension varies from spacer location to spacer location.

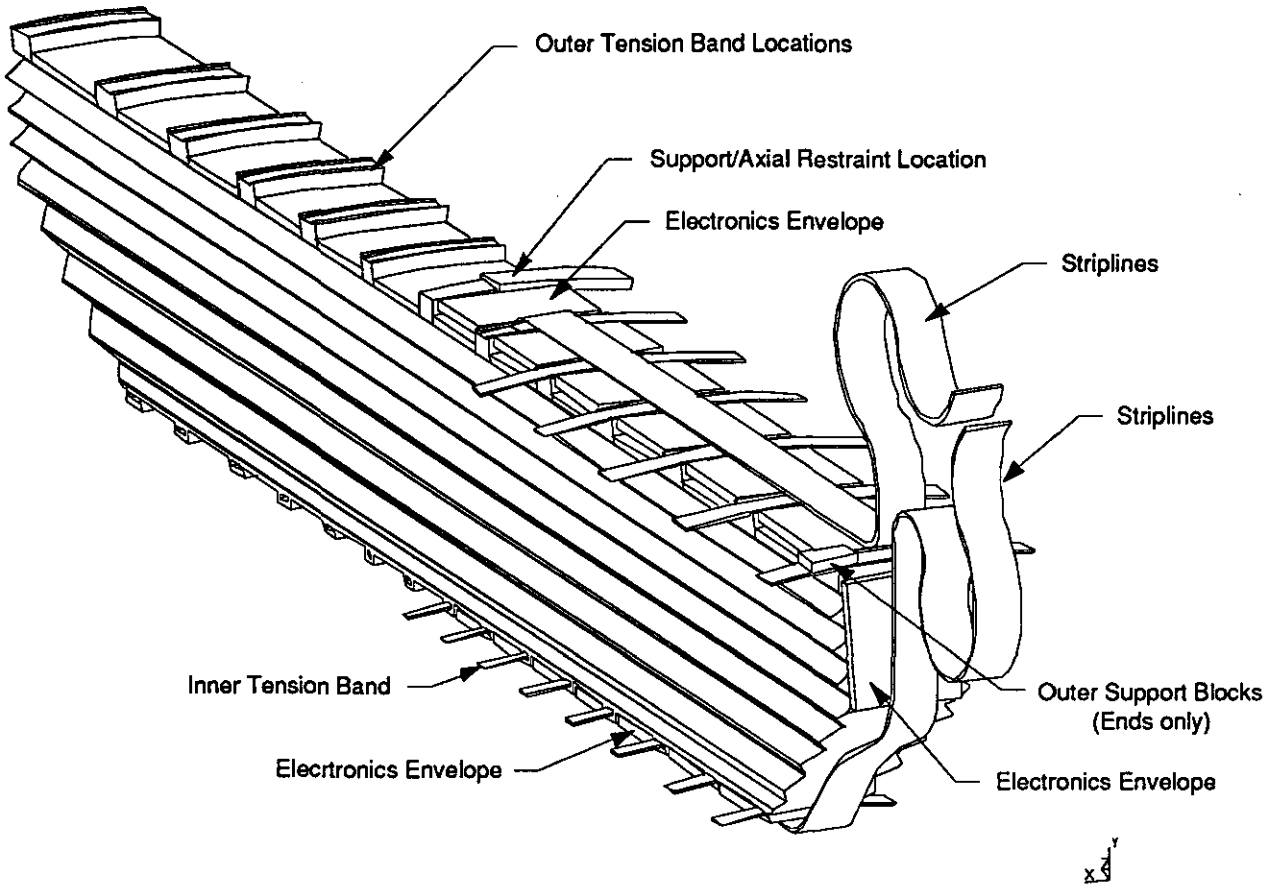

Figure 3.4-1 EM Module Inner and Outer Tension Band Support/Axial Restraints

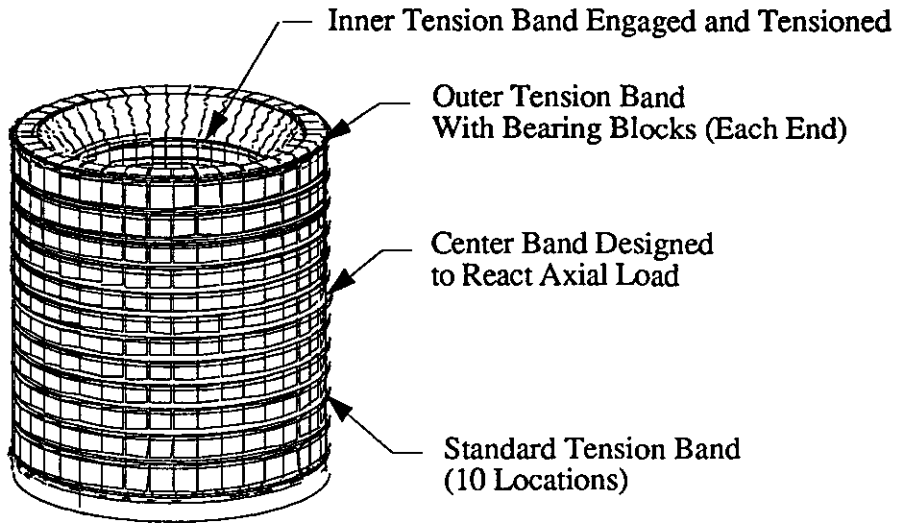

Figure 3.5-1 Barrel EM Structural Assembly With Tensioning Straps Installed

3.6 EM Barrel Assembly Support Within the Cryostat Liquid Vessel

The support concept of the EM Barrel Assembly within the liquid vessel is illustrated in Figure 3.6-1. Vertical support of the assembly is provided at each end (A and B in Fig. 3.6-1). and at the center (C in Fig. 3.6-1). Support blocks are attached to the outer radius of the tensioning bands to provide vertical support over the lower 180° of each end band. Without restricting axial movement, these blocks contact the liquid vessel near the head where it is given direct support by the liquid vessel stanchions . The inner radius of the Barrel Assembly does not touch nor is it supported by the inner cylinder of the liquid vessel. The central support (C in Fig. 3.6-1) is also designed to provide vertical support for the assembly while precluding axial movement at the center of the assembly. Load in the central region of the liquid vessel is supported by the central washer (TN93–313). This support concept allows the Barrel Assembly to shrink from each end to the center during the thermal cool down.

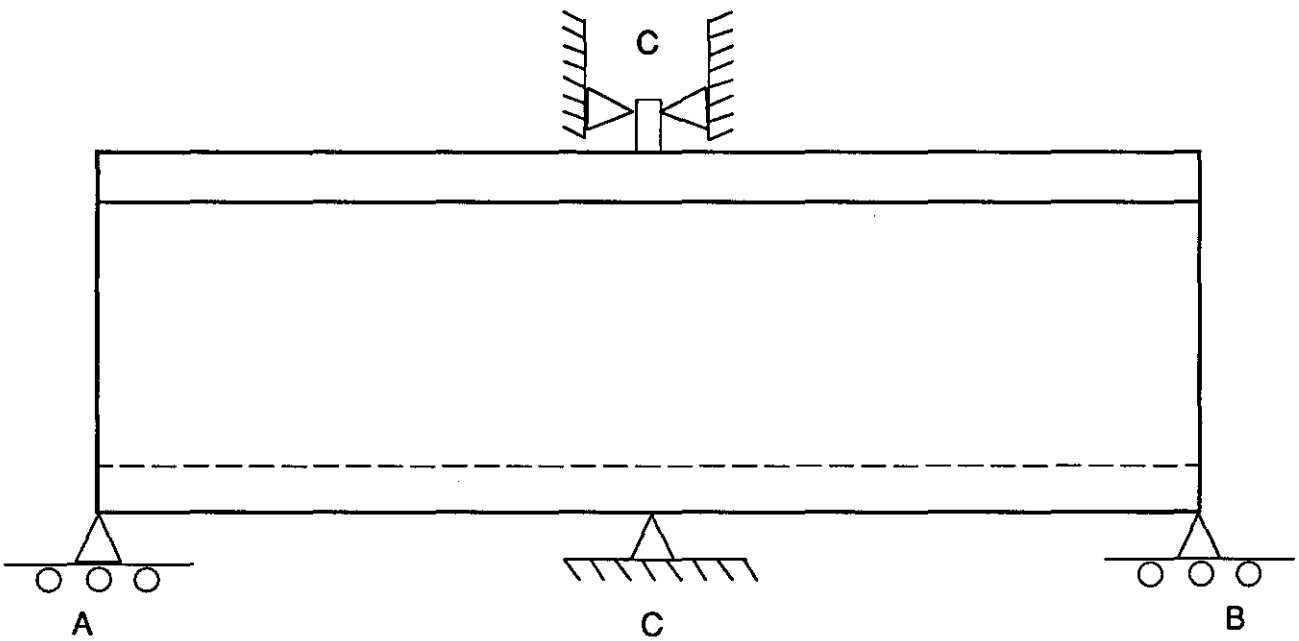

Figure 3.6-1 EM Assembly Support Concept

4.0 STRUCTURAL ANALYSIS

The EM Barrel Assembly consists of 960 absorber plates and 960 signal electrodes held structurally together as a monolith by support bands located within the spacers on the inner and outer radius. The Assembly must have structural integrity when subject to gravity loading during assembly and operation and when subject to thermal cool down during operation. Structural integrity is defined as precluding excessive deflections, stresses or loss of stability and maintaining

band prelude. Validation of the structural integrity of the Barrel EM Accordion requires detailed 3-D finite element models of the absorber plates, spacers, and tensioning bands. These models will also be used to determine how many of the existing axial shear tabs are required to transfer beam-type shear loads. This information will then be used to set the tolerance requirements on the spacer locations. The 3-D finite element models will also be used to determine the effectiveness of the spacers in transferring the radial shear loads.

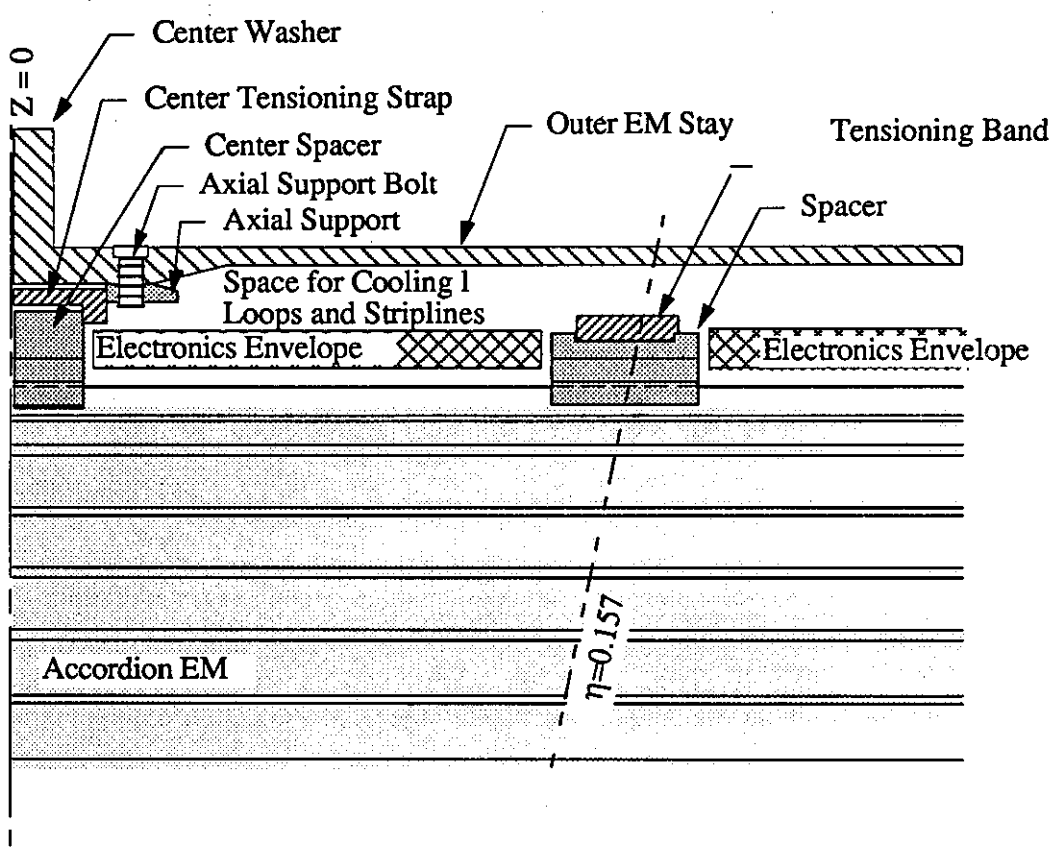

Figure 3.6-2 EM Assembly Central Support Concept

In preparation for development of the 3-D finite element models simplified finite element models were developed to determine the structural behavior of the absorber plate and the EM Barrel Accordion. A description of the simplified models and the analyses results are presented in the following sections.

4.1 Absorber Plate Deflection Subject to Gravity Loading

As a first step in demonstrating the structural integrity of the Barrel EM Accordion design, the behavior of a single absorber plate was examined. Because of symmetry only half the plate was analyzed. The plate was modeled using parabolic shell elements. The dimensions of the plate

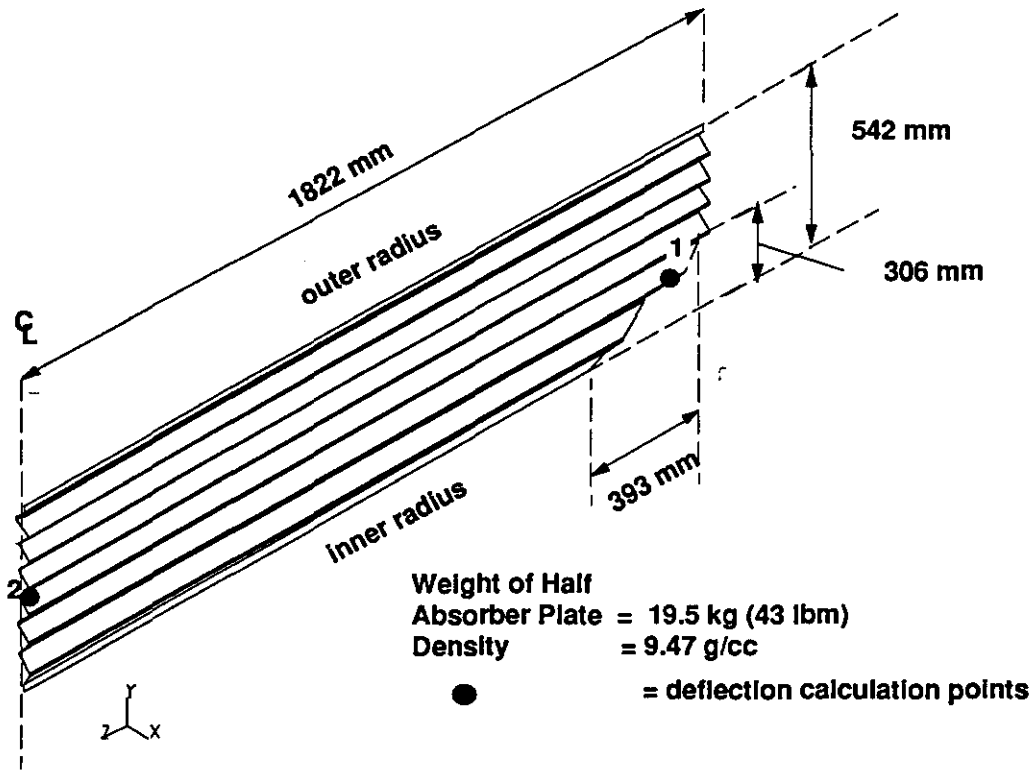

Figure 4.1-1 EM Absorber Plate Geometry

are shown in Figure 4.1-1 and the absorber plate lay-up is shown Figure 4.1-2. The material properties used for the absorber plate are given in Table 4.1-1.

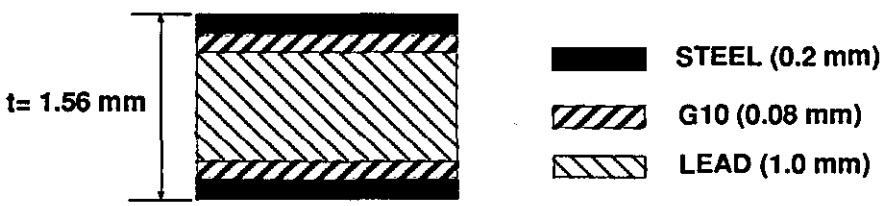

Figure 4.1-2 EM Absorber Plate Lay-up

Table 4.1-1 EM Absorber Plate Structural Properties

Material	Modulus of Elasticity MPa (psi) 10^6		Poisson's Ratio		% ΔL/L (293°K - 77°K)	
	E	$E_\perp$	ν	$\nu_\perp$	α	$\alpha_\perp$
STEEL	0.2 (30)	0.2 (30)	0.272	0.272	0.281[1]	0.281[1]
G10	0.03 (4.4)	0.01(1.47)	0.187	0.3	0.112	0.525
LEAD	0.018(2.6)	0.018(2.6)	0.44	0.44	0.586[2]	0.586[2]

Notes: 1. property (Reference 1) for SS301, 302, 303, 304L, 316, 321 and 347 stainless steel
2. property (Reference 1) for pure lead

A gravity load was applied normal (1.0 G, -x direction) to the plate and the maximum deflection was calculated(location 1), as shown in Figure 4.1-1. Also, the deflection at the center of the plate(location 2) was computed. The plate was supported at the spacer locations which exist at the inner and outer radius. A sensitivity analysis was performed to determine the influence of varying these support conditions on the magnitude of the resulting deflections. The results of these analyses are given in Table 4.1-2.

Table 4.1-2 EM Absorber Plate Subject to Gravity - Analysis Results

Edge Fixity	Deflection (mm)	
	δ_{x1}	δ_{x2}
Full Length of Edge	1.72	1.37
Full Length of Spacer	2.13	1.82
Center of Spacer	3.94	3.82

Note: top of plate has 13 spacers & bottom of plate has 15 spacers

The analysis results show that the deflections increase by more than a factor of two when a continuous support is replaced by a local support covering a small area at the center of each spacer. Therefore, it is important to provide sufficient spacer length to minimize the deflections. It should also be noted that the deflection at position 1 is greater than at position 2 due to the lack of support on the chamfered edge.

4.2 Absorber Plate Thermal Cool Down

4.2.1 Experimental and Analytical Determination of Thermal Cool Down of an Equal Bend Absorber Plate

Analytical and experimental data of an equal bend absorber plate supported only at the outer edge were compared to validate the analytical model used in predicting the behavior of accordion plates subjected to thermal cool down. The plate geometry and construction is shown in Figures 4.2.1-1 and 4.2.1-2, respectively.

The test consisted of measuring the room temperature lengths between pins located in the plate (A and B in Fig. 4.2.1-1), submerging the plate in liquid nitrogen (LN_2), and remeasuring the lengths between the pins while in the LN_2. The test results are presented in Table 4.2.1-1.

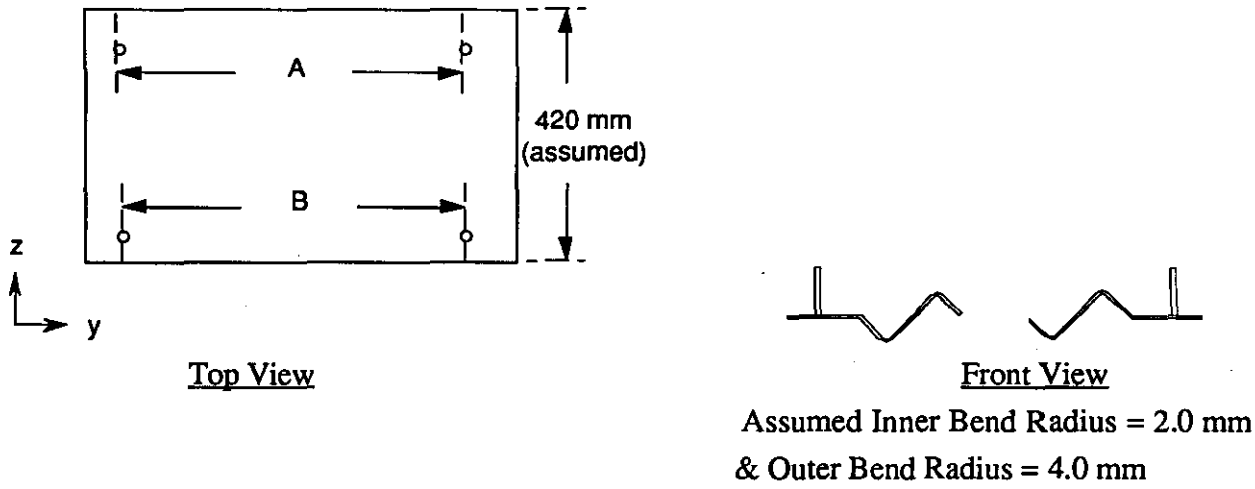

Figure 4.2.1-1 Equal Bend Absorber Plate Geometry

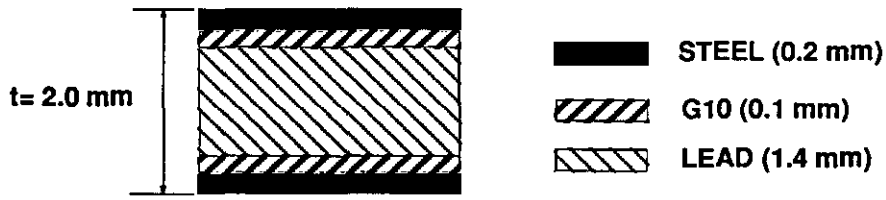

Figure 4.2.1-2 Equal Bend Absorber Plate Lay-up

Table 4.2.1-1 Equal Bend Absorber Plate Thermal Contraction - Test Results

Temp (° K)	Length A (mm)	Length B (mm)
293	472.27	470.43
77	469.11	467.55

The Cool Down process for the edge supported absorber plate was modeled using plane stress, plane strain, and 3-D elements. The thermal contraction was computed and the results compared to the test data (Table 4.2.1-2). The thermal contraction computed from the plane stress and plane strain analysis bounded the test results. However, the thermal contraction calculated from the 3-D analysis correlated well with the test results. .

Because of the scatter in the coefficient of thermal expansion data for G10 (Ref. 1), analyses were performed to determine the influence of this scatter on the thermal contraction of the plate. The 3-D analysis showed that a factor of 5 increase in the G10 in-plane coefficient of thermal expansion increases the plate thermal contraction by only 5 %.

Due to the symmetric nature of the equal bend absorber plate, thermal contraction was limited to in-plane motion. The deformation (exaggerated) of the equal bend plate due to thermal contraction is shown in Figure 4.2.1-3.

Table 4.2.1-2 Equal Bend Absorber Plate Thermal Contraction Results

Thermal Contraction	Test[1]		Analysis		
	A	B	Plane Stress	Plane Strain	3-D
$(\% \Delta L/L)_y$	0.67	0.61	0.53	0.8	0.635 (0.666)[2]
$(\% \Delta L/L)_z$	---	---	---	---	0.356 (0.377)

Notes: 1. $(\% \Delta L/L)_z$ was not measured
2. α for G10 set to 0.56, $\alpha_\perp$ was not changed

Figure 4.2.1-3 Equal Bend Absorber Plate Deformation

4.2.2 Absorber Plate Thermal Cool Down Analysis

The experience obtained from analyzing the equal bend absorber plate was applied to a thermal expansion analysis of the GEM EM absorber plate. The purpose of this analysis was to determine the room temperature shape of the absorber plate based on achieving the desired shape at cool down. The solid finite element model of the absorber plate was supported only at the outer radius. The analysis results are shown in Table 4.2.2-1.

Table 4.2.2-1 EM Absorber Plate Thermal Contraction - Analysis Results

Thermal Deflection (77°K- 293°K)	3-D Analysis mm	Thermal Expansion (77°K- 293°K)	3-D Analysis %
δ_x	3.475	$(\Delta L/L)_x$	0.63
δ_y	1.512	$(\Delta L/L)_y$	n/a
δ_z	6.38[1]	$(\Delta L/L)_z$	0.35

Note: 1. based on width of half the absorber plate = 1822 mm

The in-plane thermal expansion, $(\Delta L/L)_x$ and $(\Delta L/L)_z$, of the EM absorber plate is identical to that of the equal bend absorber plate. The only difference is that the EM absorber plate has an

out-of-plane deflection, δ_y, due to lack of symmetry of the bend angles. The deformation (exaggerated) of the EM absorber plate is shown in Figure 4.2.2-1.

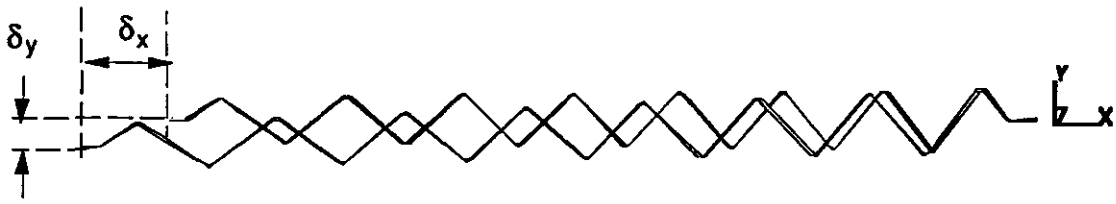

Figure 4.2.2-1 EM Absorber Plate Deformation

Since the liquid krypton (LKr) temperature is 120°K, the thermal expansion of the EM accordion will be approximately 20% less than that given in Table 4.2.2-1 which are based on the liquid nitrogen temperature of 77°K. This conclusion is based on the thermal expansion of steel and lead varying linearly with temperature for the temperature range of 120°K to 77°K as given in Reference 1.

4.3 Spacer/Absorber Plate Interface Under Gravity Loading

The purpose of this study was to determine the relationship between peel /shear stresses with spacer /accordion bonding length for a 1.0 G vertical gravity load case. For this study a plane stress model was constructed of the absorber plate. The G10 spacers were attached to either end of the plate. The outside of the spacer was restrained from motion. The configuration analyzed is shown in Figure 4.3-1.

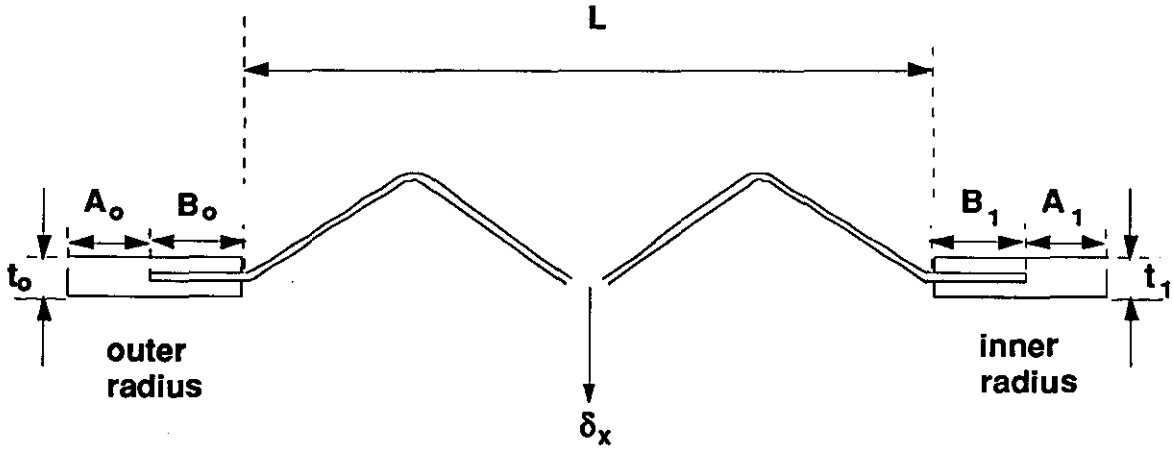

A_0 = 38.1 mm , A_1 = 22.9 mm, t_0 = 10.8 mm , t_1 = 6.8 mm , L = 557.3 mm

Figure 4.3-1 EM Spacer/Absorber Plate Interface Geometry

A plane stress analysis was performed. The total depth of each component used in the analysis is given below:

inner spacer = 664.5 mm,
outer spacer = 911.2 mm,
absorber plate = 3036 mm

A summary of the analysis results is presented in Table 4.3-1.

The analysis shows that the length (B_0 , B_1) of the spacer/plate bond has a small influence on the deflection of the plate and on the peak peel and shear stress. However, the length of the spacer/plate bond has a major influence on the average shear stress. This analysis does not provide any criteria for selecting the optimum length of the spacer/plate bond. What remains to be investigated is the effects of thermal contraction on bondline stresses.

Table 4.3-1 EM Spacer/Absorber Plate - Analysis Results

Configuration	δ_x mm	Spacer Position	Peel Stress[1] MPa (ksi)		Shear Stress[1] MPa (psi)	
			Top	Side	Top	Side
A_0 = 0, B_0 = 0	1.49	outer	0	0	0	0
A_1 = 0, B_1 = 0		inner	0	0	0	0
A_0 = 38.1,	1.79	outer	58.6	0	4.4/1.3[2]	0
B_0 = 0			(8.5)		(636/186)	
A_1 = 22.9,		inner	86.2	0	12.1/0.7	0
B_1 = 0			(12.5)		(1758/95)	
A_0 = 38.1,	1.36	outer	0.5	1.6	0.06/0.03	1.8/0.2
B_0 = 18.56			(0.08)	(0.2)	(8/4.5)	(256/31)
A_1 = 22.9,		inner	2.6	1.6	0.4/0.2	2.0/0.4
B_1 = 19.2			(0.4)	(0.2)	(55/33)	(287/53)
A_0 = 38.1,	1.45	outer	0.6	1.7	0.09/0.06	1.8/0.3
B_0 = 11.3			(0.08)	(0.2)	(13/8)	(264/50)
A_1 = 22.9,		inner	2.6	1.8	0.4/0.2	2.1/0.6
B_1 = 11.5			(0.4)	(0.3)	(57/34)	(299/83)
A_0 = 38.1,	1.56	outer	2.8	2.1	1.0/0.6	1.8/0.8
B_0 = 3.7			(0.4)	(0.3)	(139/88)	(266/118)
A_1 = 22.9,		inner	4.8	2.4	1/0.7	2.0/1.3
B_1 = 3.8			(0.7)	(0.4)	(145/100)	(295/186)

Notes: 1. peak stress, 2. average stress

4.4 Barrel EM Accordion Structural Analysis

The intent of this analysis is to determine the structural behavior of the Barrel EM Assembly once it has been inserted in the cryostat and to determine the preload which must be applied to the inner and outer bands to hold the accordion modules together during operation. For simplicity, each absorber plate is modeled by two beam elements which have the same axial and bending stiffness as the absorber plate as well as the same effective radial coefficient of thermal expansion. The inner and outer spacer is modeled using beam elements. Each accordion beam representation is assumed to be rigidly attached to spacer. The stiffness of the spacer is based on using a rectangular cross section. The spacer width(w) is equal to 1/4 the length on the absorber plate. The spacer height is equal to the distance from the absorber plate/spacer interface to the band. The spacer is attached to a beam model of the wall of the cryostat at each module location by means of rigid elements. Whether only the translational degrees of freedom or all six degrees of freedom are tied between the spacer and cryostat wall through the use of rigid elements has little influence on the analysis results. It should be noted that the 180 ° model only represents a two dimensional behavior of the accordion. The cross sectional properties of the members used in this analysis and the effective beam properties of the absorber plates are given in Tables 4.4-1 and 4.4-2, respectively.

Table 4.4-1 EM Accordion/Cryostat Cross Sectional Properties

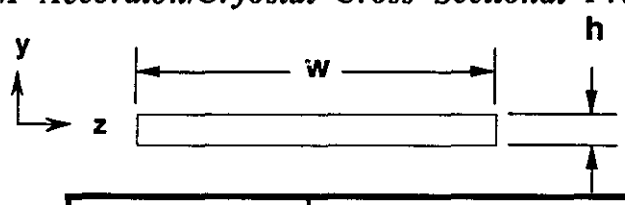

Component	Dimension (mm)	
	w	h
inner spacer	664.5	23
outer spacer	911.2	38.1
cryostat	3644.9	50.8

Table 4.4-2 EM Absorber Plate Effective Beam Properties

Radial Stiffness AE MN (kips)	Bending Stiffness EI MN-mm^2 (kips-in^2)	% ΔL/L (293°K - 77°K)
1.8 (414.9)	123.2 (42.9)	0.514

Structural analysis has only been performed on the accordion lay-up shown in Figure 4.4-1. The only difference between this lay-up and the current lay-up is that the G10 thickness is 0.02 mm less in the current lay-up (Fig. 4.2.1-2).

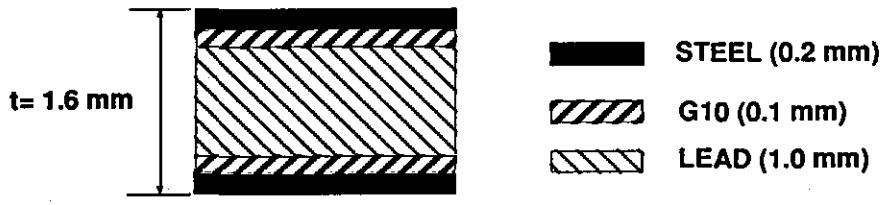

Figure 4.4-1 EM Absorber Plate Lay-up

Two support scenarios were investigated. The first consisted of providing the accordion with a 45° radial support on either side of the centerline. The other consisted of providing the accordion with a 90° radial support on either side of the centerline. The support conditions were applied to the cryostat wall. A 1.0 G vertical gravity load was applied and the maximum accordion deflections calculated. For the 45° support condition the deformed shape of the accordion is shown in Figure 4.4-2. For a 90° support condition the deformed shape of the accordion is shown in Figure 4.4-3. In addition, the maximum hoop tension stresses were calculated for both the inner and outer spacers. These are the stresses that the band preload must generate to keep the accordion in compression. The results of this analysis are presented in Table 4.4-3.

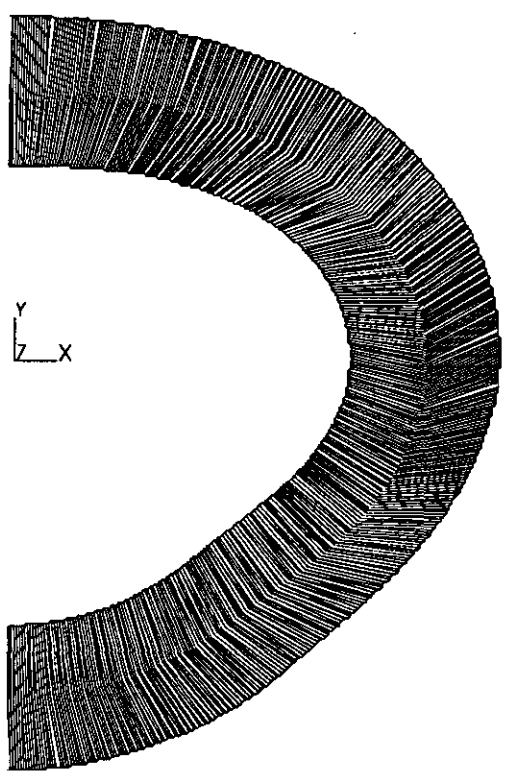

Figure 4.4-2 EM Accordion Deflection- 45° Support

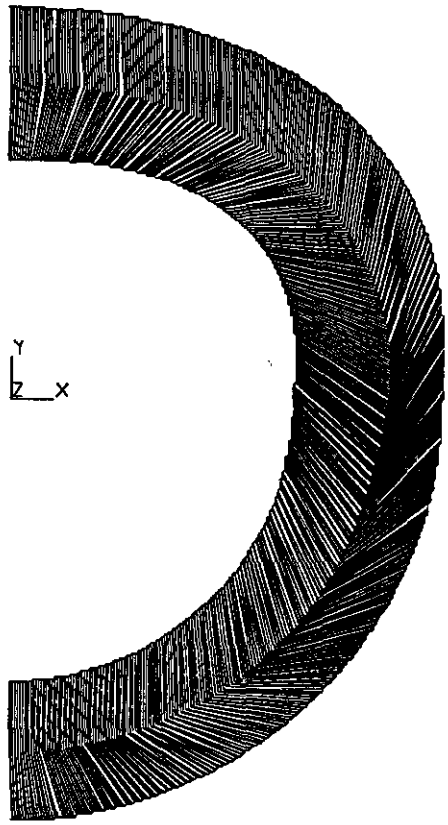

Figure 4.4-3 EM Accordion Deflection- 90° Support

The results show that the accordion needs to have a tight circumferential fit with the cryostat for approximately 180 °. If the accordion is free to oval, not only does the deflection of the plate increases dramatically but also the tensile hoop stresses. The highest hoop stresses occur locally at the location where the support ends abruptly. This is a very conservative support scenario, since in reality the support conditions would gradually transition. This would result in a large reduction in the hoop stress. In addition, the analysis results are based on the behavior of the accordion in air. In LKr the deflections and stresses should be reduced by about 28%.

Table 4.4-3 EM Accordion Effective Beam Analysis Results

Component	45° Support[1]		90° Support[1]	
	Displacement mm	Hoop Stress MPa(psi)	Displacement mm	Hoop Stress MPa(psi)
inner spacer	----	5.5(800)	----	2.5(368)
outer spacer	----	10.4(1508)	----	1.7(245)
absorber plate	3.86	----	1.37	----

note:

1. for an absorber plate fixed at the inner and outer the deflection is 1.34 mm

4.5 Future Structural Analysis

So far only a preliminary analysis has been performed on the Barrel EM Accordion. To gain an understanding of the structural interaction of the various components that make up the accordion, detailed 3-D finite element models are required of the absorber plates, the spacers and the bands. These models will be used to determine the failure modes of the components when subject to gravity load and thermal cool down for assembly and operation scenarios. Analysis will be performed to determine the effects of band preload on the spacers and absorber plates. Analysis will also be performed to determine the stability of the absorber plates during assembly and operation . These models will also be used to determine how many of the existing axial shear tabs are required to transfer beam-type shear loads .This information will be used to set the tolerance requirements on the spacer locations. The 3-D finite element models will also be used to determine the effectiveness of the spacers in transferring the radial shear loads. These analysis will provide inside into the structural integrity of the shear tabs. Besides gaining inside into the structural behavior of the components that make up the Barrel EM Accordion, these analysis are required to arrive at a sound engineering design.

5.0 MODULE ASSEMBLY

The Signal Electrodes, Absorber Plates and Hexcel Spacers must be assembled into a structurally stable module which can be safely moved for testing and shipment to the SSCL. The mechanical assembly of these components into a module is discussed in the following sections. Cleanliness requirements, testing procedures and other assembly details are discussed in TN–93–326.

5.1 Assembly Process

Modules will be assembled on a table (Fig. 5.1-1) designed to provide support on the inner and outer edges of the absorber plates and signal electrodes. This approach assures that the first and all subsequent absorber plates in the module stack have the same amount of deflection and transmit their weight through the spacers on the inner and outer edges of the absorber plate as designed.

The assembly process is initiated by placing an absorber plate on the assembly table as shown in Figure 5.1-2. This is followed by a layer of Hexcel and then a signal electode which is aligned to the aborber plate by keys on the spacers (Fig. 5.1-3) After the fourth absorber plate has been positioned, a channel for guiding the Barrel Assembly Bands is placed in the slots in the inner spacers and held in position by a threaded insert (Fig. 5.1-4).

Threaded inserts are used in every fourth spacer, holding the channel in place and providing a contact surface and tensioning mechanism for the Assembly Bands. Two tie rods,

threaded on each end, are inserted in holes provided in each spacer. After 24 absorber plates and 24 signal electrodes have been placed on the stack, nuts with lock washers are placed on the threaded end of the tie rods to keep the spacers in compression and maintain the structural integrity of the module. In this configuration the module can be handled as a unit using the handling fixtures designed for this purpose (Sect. 6.0).

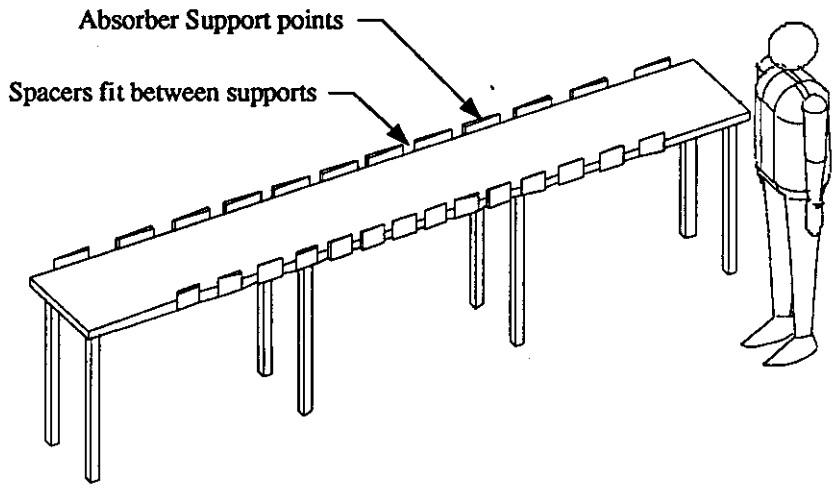

Figure 5.1-1 Module Assembly Table

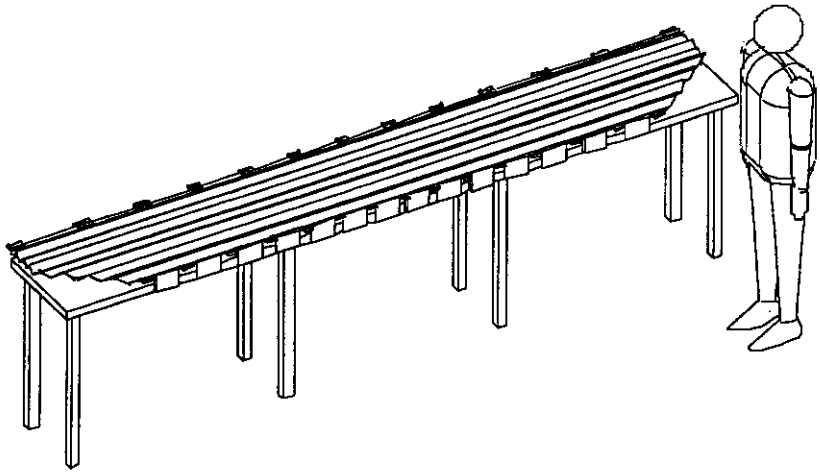

Figure 5.1-2 Absorber Plate on Assembly Table

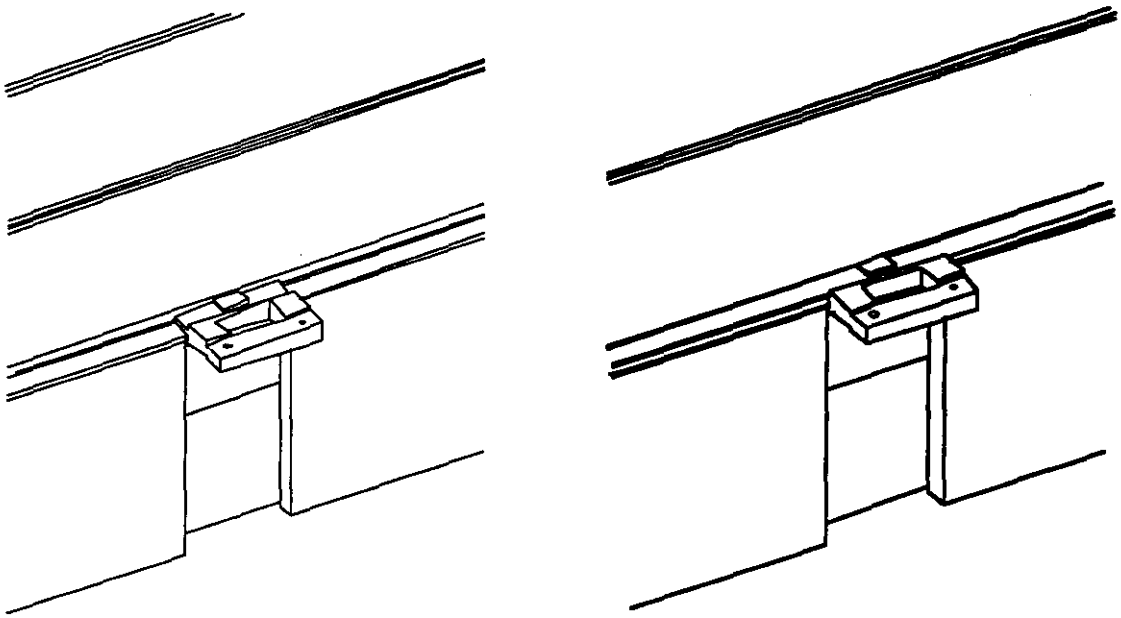

Closeup of Spacer on Absorber Plate

Electrode Alignment Using Key on Spacer

Figure 5.1-3 Signal Eectrode Assembly onto Absorber Plate Spacer

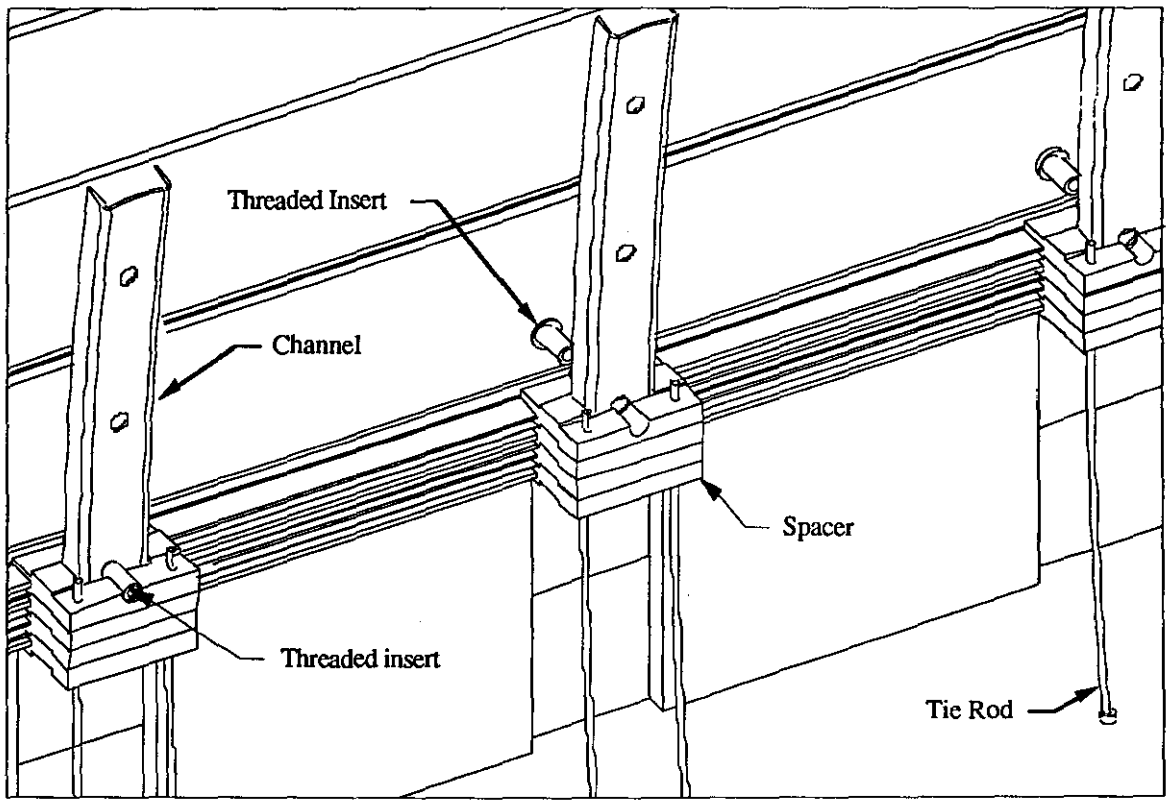

Figure 5.1-4 Channel, Threaded Inserts and Tie Rods Installation

5.2 Protective Absorber Plate

When protection for the exposed signal electrode is required (such as during shipment), one additional absorber plate, not part of the module, can be added to the assembly. (Fig. 5.2-1). It is attached by means of special nuts which penetrate the spacer and engage the threated portion of the tie rods. After arrival at the SSCL and prior to being placed into the Barrel Assembly (Sect. 6.0), this protective absorber plate is removed and the special nuts are replaced with those selected for the permanent installation.

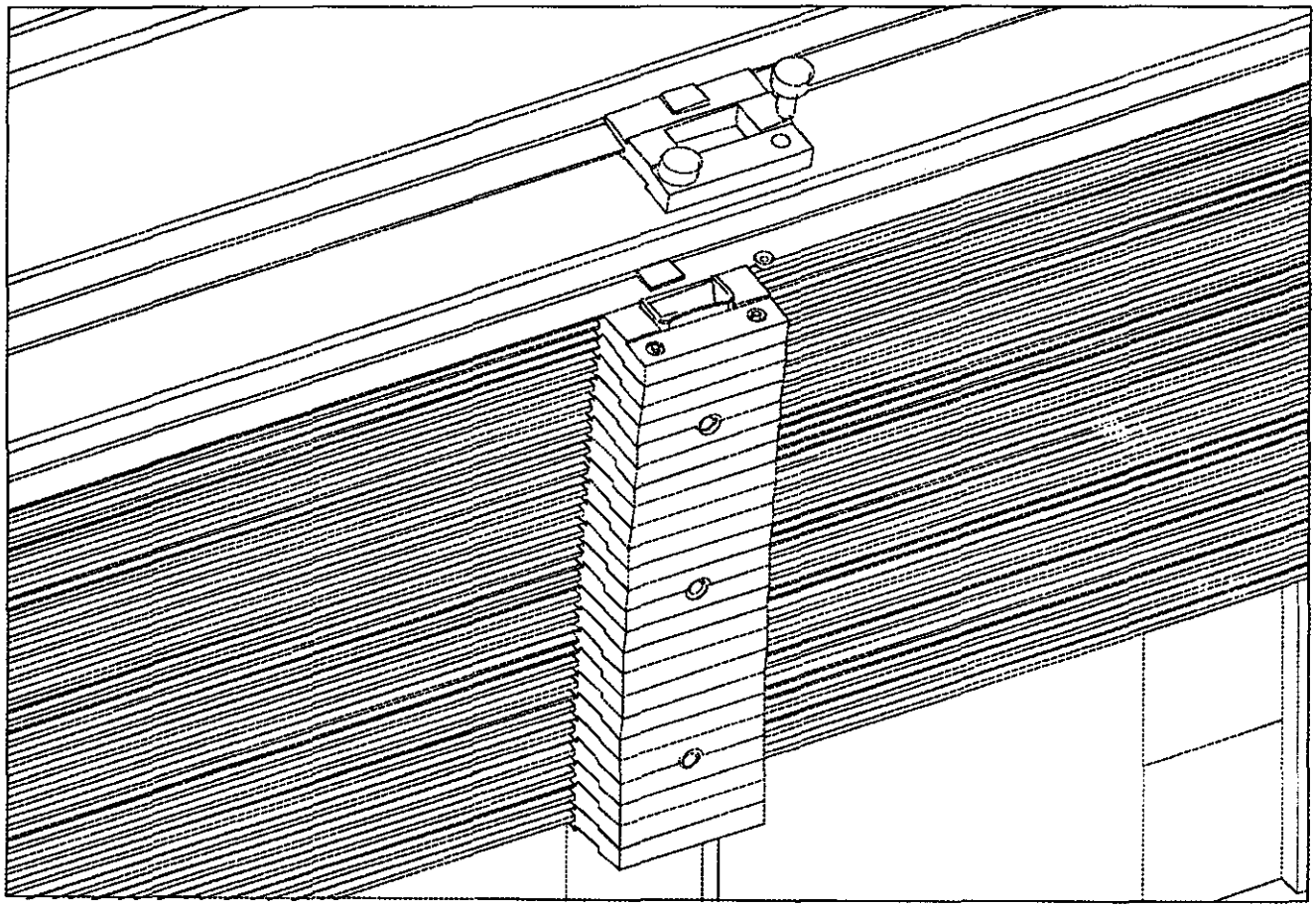

Figure 5.2-1 Attachment of Protective Absorber Plate

6.0 BARREL ASSEMBLY

Upon arrival at the SSCL each module is removed from the shipping container, visually inspected for damage, electrically tested, cold tested and stored until needed for Barrel Calorimeter Assembly. The process used to assembly modules into a 2p configuration is discussed in the following sections. The overall process of Barrel Calorimeter Assembly is described in TN903-309.

6.1 Assembly Into Two Halves

6.1.1 Removal From Shipping Container and Breakover

The EM Modules are received oriented as shown in Figure 6.1.1-1. Upon removal from their individual shipping containers Lifting Slings are attached to each end, Side Clamps are added to secure the module and to enhance side load capability and two Sling Strong Backs are attached to eliminate sling induced bending during rotation and Breakover. Rotation is initiated by attaching hoists to the rotation Clevis and lifting the module to sufficient height above the work surface. The locking pins in the Clevis are released and the module is rotated 90 degrees into the Breakover Orientation. This fixture allows rotation and locking in any orientation about the long axis and may lend itself to test applications.

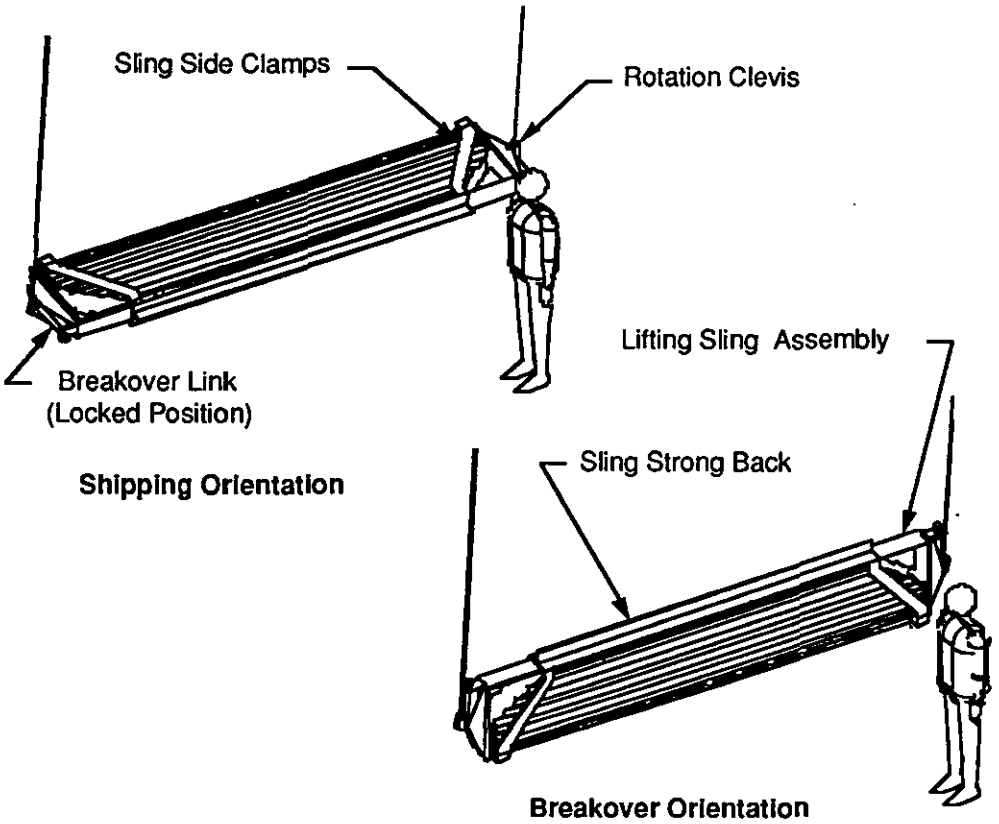

Fig 6.1.1-1 Module Shipping and Breakover Orientation

Upon removal of clamps and strong backs and attaching hoists to the breakover links, the module is ready for Breakover. The Breakover Sequence is as shown in Figure 6.1.1-2. This requires either two hoists or a single hoist with a long spreader beam.

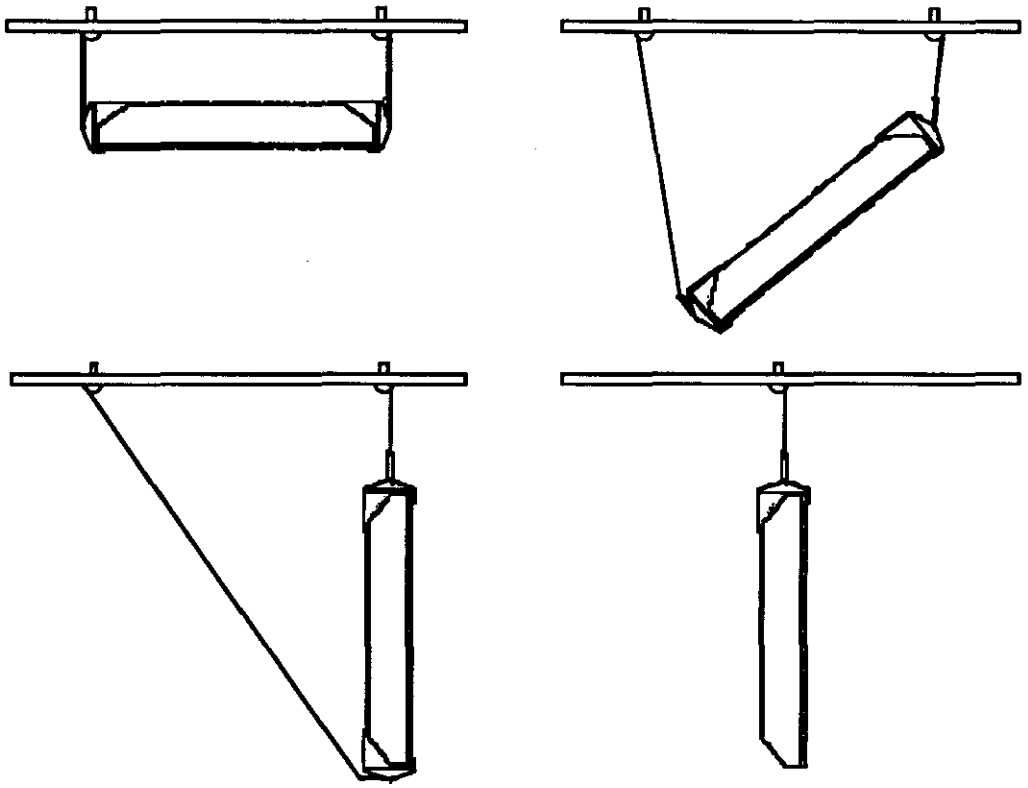

Fig 6.1.1-2 Breakover Sequence

EM Modules are lowered as shown in Figure 6.1.2-1 into the Integration Fixture and secured to the Outer Kick Plate and the Inner Module Support Ring. Once the Module is secured, the Lifting Sling is removed and the entire procedure beginning with removal from the shipping container is repeated twenty times total for each 1π section. Figure 6.1.2-2 shows a completed 1π Section. The Inner Guide Bands are fed through each module as it is added so that fifteen total tension bands can be "pulled" into position at this assembly level.

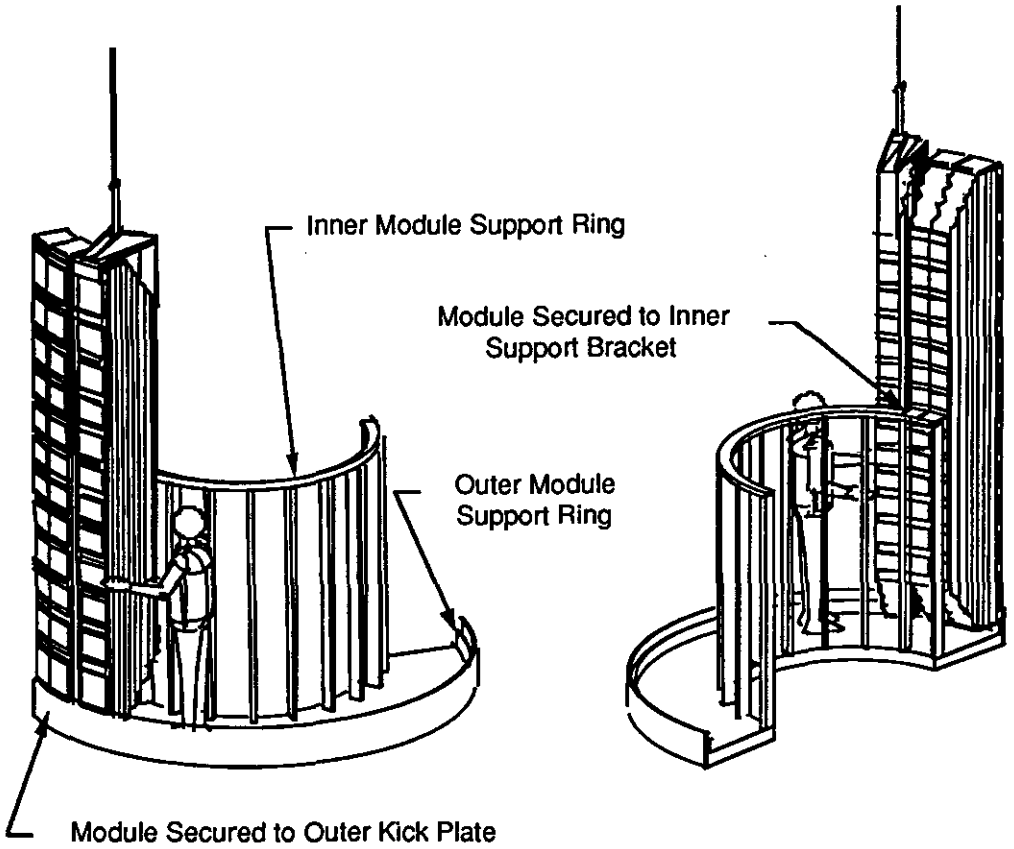

Fig 6.1.2-1 Secure Module to Integration Fixture

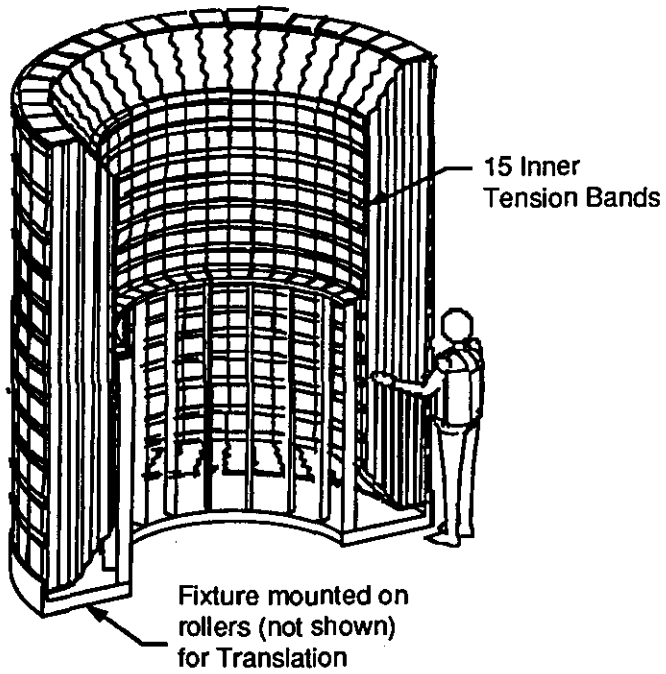

Fig 6.1.2-2 Assembly of 1π Section

6.2 Assembly of Two Halves into 2π EM Barrel Assembly

Each 1π Section is checked to ensure readiness for assembly, including tensioning of the inner straps. The mating process is depicted in Figure 6.2-1. The halves are rolled into position far enough to engage the Fixture Alignment Indicators. Half of the fixture is fixed to the floor with built-in adjustment capability while the other half has rollers and limited adjustment capability. The halves are aligned and moved closer until the Inner Tension Straps can be engaged. During the last several millimeters of travel, verification of the fit of the shear tabs on the spacers is performed. The Tension Straps are spliced together and tensioned in sequence to the proper levels using tensioning screws located on each module. Figure 3.5-1 shows the mated 2π Barrel Assembly. The Outer Tension Straps are installed and tensioned, removing the fixture kick plate prior to installing the bottom strap. Once the straps are secure the Inner Module Support Ring is removed and the Barrel is removed from the Integration Fixture. Completion of the installation and routing of the Strip Lines is performed prior to electronics testing.

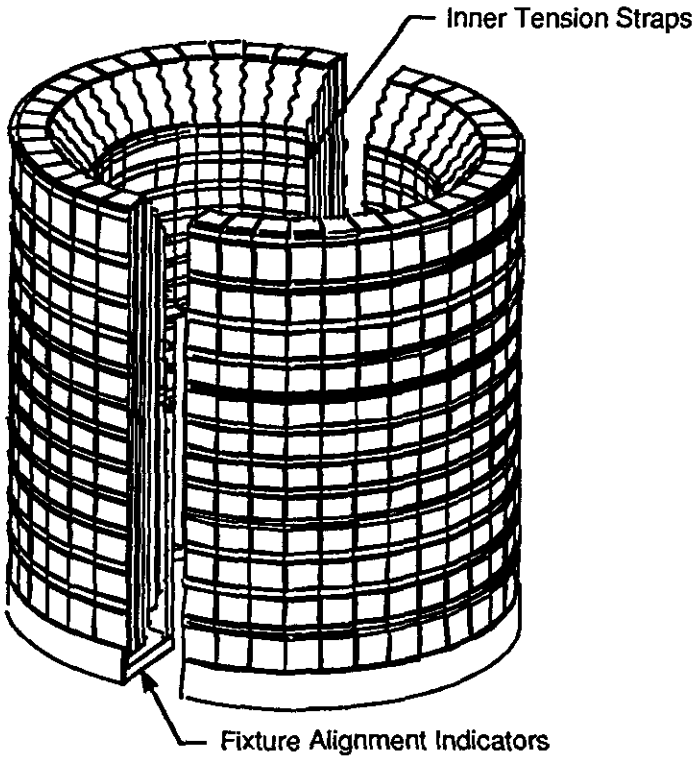

Fig 6.2-1 Mating of 1π Sections