GEM TN-93-315

Cryogenic Signal Feedthrus for GEM Liquid Calorimetry

Paul M. Mockett
University of Washington

Fred Lobkowicz
University of Rochester

May 6, 1993

Abstract:

The noble liquid calorimetry for GEM requires approximately 130,000 signals to be brought out of the cryostat. This large number of signals requires that the feedthrus be very compact and the environment requires that they be very reliable. The SLD detector has used feedthrus with glass sealed pins in an Inconel 750 metal matrix with great success. There have been no failures among their 40,000 channels after several years of operation. This technology has been used by NASA in space as well as in the hostile, high pressure environment found at the bottom of oil wells.

CRYOGENIC SIGNAL FEEDTHRUS FOR GEM LIQUID CALORIMETRY

Introduction

The noble liquid calorimetery for GEM requires approximately 130,000 signals to be brought out of the cryostat. This large number of signals requires that the feedthrus be very compact and the environment requires that they be very reliable. The SLD detector has used feedthrus with glass sealed pins in an Inconel 750 metal matrix with great success. There have been no failures among their 40,000 channels after several years of operation. This technology has been used by NASA in space as well as in the hostile, high pressure environment found at the bottom of oil wells.

Baseline Design for Cryogenic Feedthrus

We have developed very compact feedthrus for the GEM baseline based on this SLD technology. See Figs. 1a,b,c,d. Fig. 1a describes the basic feedthru similar to an array of the D-connector feedthrus that were used in the SLD cryostat. Each pin is sealed in an Inconel matrix with either glass or ceramic. Surrounding each pin with metal minimizes stresses and prevents catastrophic failure of the seal. The SLD feedthrus used glass as the seal but ceramic is thought to be even more robust. Bids from several vendors indicate a price per connector of around $1000 in large quantities.

At each end of the D-connector feedthru, the edge of the metal has been undercut so that plastic hooks on each end of the cryogenic cable connectors can lock the connector in place after insertion. See Figs. 2a,b. Removal of a connector requires the use of a pliers like tool we have designed that depresses the hooks and allows the connector to be pulled free.

In this design, the signal density is increased first by combining twelve 36-pin D-connectors in one piece so that only a single weldment around the periphery is required and second by utilizing the metal matrix for the transmission of the common ground signal. Hence each signal needs only one pin while the inductance is kept low. Four of these 432 signal feedthrus are welded on a stainless flange providing 1728 channels within a 280 mm diameter region as shown in Fig. 1b.

The connectors on the cold end of the assembly are welded to a stainless flange which is part of an aluminum-stainless bimetalic plate. This enables the cold end to be welded to the head flange to provide a robust vacuum tight seal. The flange containing the

feedthrus and the head wall have their stresses decoupled by means of a thin aluminum coupling tube shown in Figs. 1c,d.

Although the SLD experience found no leaks developing after installation, for additional protection against the occurrence of a small leak, each feedthru assembly is isolated from the main vacuum by means of a stainless bellows. The vacuum for each feedthru flange can be independently pumped out. The bellows are designed to accommodate the maximum of 10 mm relative lateral movement between the cold end and the warm end. The cables connecting the cold feedthrus to the warm feedthrus have a large loop in them to prevent their being stressed under this lateral movement. ~~The feedthru assembly could also be rotated at each position to reduce the required lateral movement parallel to the plane of the cables.~~ The bellows is made of 0.018" stainless steel and provides a heat leak to the argon of a little more than a watt. The heat carried by the cables is about nine watts for comparison and the amplifiers per assembly supply about 130 watts. Heat supplied by the cables and stainless bellows is carried to the cold wall through the aluminum on the bimetalic plate and the aluminum tube that couples to the massive liquid head wall. Much less than one degree temperature difference is require for this transfer. Heat is also be carried away by the interior signal cables connected to the feedthrus.

On the warm-flange end of the feedthru assembly the vacuum seal is made with an o-ring to the vacuum wall. This eliminates the need for further welding after the initial assembly and reduces the risk of damaging the assembly. The heat supplied to the warm end depends on the environment and on the exterior cables connected to it. To prevent condensation on the connector pins a commercially available printed circuit heater disk is clamped to the flange surrounding the connectors. The temperature is controlled by a thermostat which keeps the connectors above the dew point.

Cryogenic Connectors

Cryogenic connectors have been designed to mate to the feedthrus as shown in Figs. 2a,b. These connectors are made from injection molded Vectra plastic. The actual pin connectors that plug into the feedthrus are commercially available for example from Samtec(SMM-118-01-S-S). There are two sections of 18 pin connectors on a 2 mm spacing that make up the 36 pin connector. The cable ground is carried from the cable by a metal double spring. One end clamps against one side of the cable ground and the other end to one side of the D-connector. A second spring clamps to the other side of the cable and

D-connector. This arrangement provides a robust and low inductance ground connection. Quotations from vendors for the connector parts total about $5 per connector.

Cable

The 50Ω cable is made from a Kapton printed circuit shown Fig. 3. The pin connector arrays are wave soldered to the copper pads on each end of the cable. The traces are .005" wide and are etched from 1/2 oz. copper material. The 1/2 ounce copper ground layers are bonded on top and bottom of the printed circuit. The 1/2 ounce(0.0075") copper provides better than 80dB shielding at 100 MHz. The heat load is dominated by these ground planes so they should be kept as thin as possible.

Certification

We have requested in our bid specifications that these connectors be certified to have a leak rate of less the 10^{-9} cc/sec of Helium at 1 atmosphere. They also must withstand a pressure of 500 psi. about 10 times our operating pressure. In addition these connectors will be required to be certified to meet military specifications MIL Standard 883C. These approximately ninety pages of specifications have to do with withstanding thermal shock, temperature cycling and electrical resistance specifications appropriate to GEM conditions. Following the procedure used for SLD, the connector will be leak tested again after welding into the flange and after thermal cycling. After the final assembly including the bellows welding, the cold side will be leak and pressure tested and the warm side leak tested. Pressure and leak tests will be repeated following the welding of the assemblies to the mounting rings of the cryostat. Pressure testing will follow the closure of the cryostats as an added check.

Quantity Requirements

The barrel calorimeter requires about 65,500 signal connections in addition to calibration and control lines. Each feedthru assembly carries 1728 signals. Hence a ring of twenty assemblies at each end of the barrel supplies just over 69,000 signals. Each endcap requires about 29,500 signals and a single ring of twenty assemblies provides a little more than 34,500 signals. Each assembly has 48 cables so the total cable requirement is 3,840. Each cable requires two connectors so the total connector requirement is 7,680. Each assembly requires 8 feedthrus so the total feedthru requirement is 640.

Alternate Feedthru Design

The IBM company has recently applied for a patent under the trade name "Cyberflex" in which a flat Kapton printed circuit cable is directly fed through a metallic flange. The seal around the cable is metallic, and is promised to be high vacuum tight at room temperature as well as at low temperatures.

Such a feedthru would have the advantage of using fewer connectors since a single cable could go through both cold and warm feedthru. It also allows a higher signal density (>1200 signals in a port of 20 cm diameter) at possibly lower cost. Unfortunately, IBM is presently undergoing a major reorganization and the team which originally invented the procedure has been dispersed, with at least some leaving the company. As of this writing, it is not clear whether IBM wants to proceed with offering such feedthrus to outside users.

Figure Captions

Fig. 1a. Basic cryogenic feedthru showing 12 rows of 36 pins each.
Fig. 1b. Four feedthrus welded to stainless flange.
Fig. 1c. Feedthru assembly showing flanges, bellows and cables.
Fig. 1d. Feedthru assembly showing orthogonal view to 1c.
Fig. 2a. Cryogenic cable connector parts before assembly.
Fig. 2b. Assembled cable connector.
Fig. 3. 50Ω cable traces showing solder pads for pin connectors.

GEM Calorimeter Cryo. 36 Pin Signal Connector

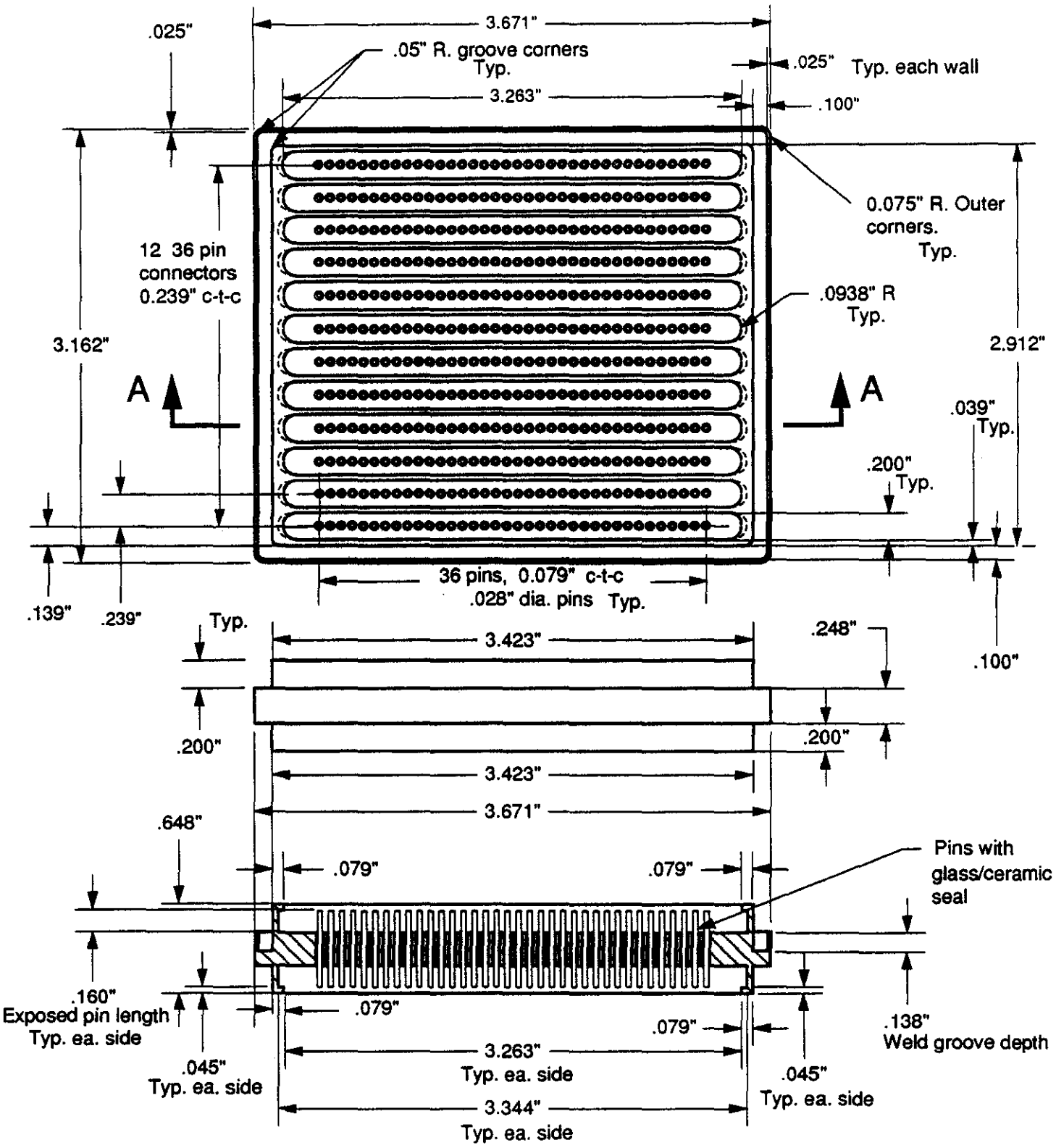

A - A

Material

Body and Pins
-Inconel "X750"

Fig. 1a

University of Washington
5/2/93 DAF

Connector arrangement in signal plate.

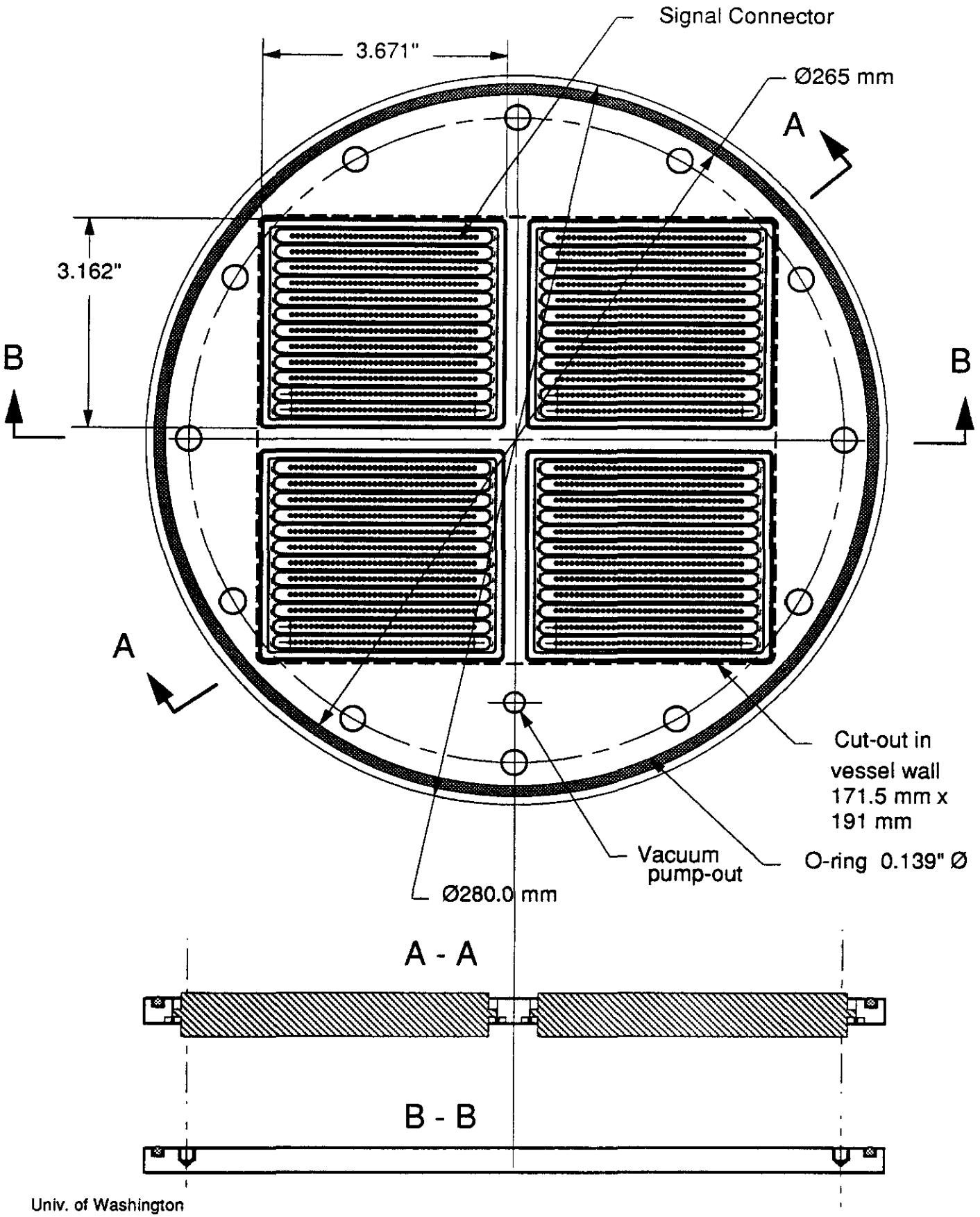

Univ. of Washington
5/3/93 DAF

Fig. 1b

Typical Signal Port Arrangement Barrel feedthrough -View 1

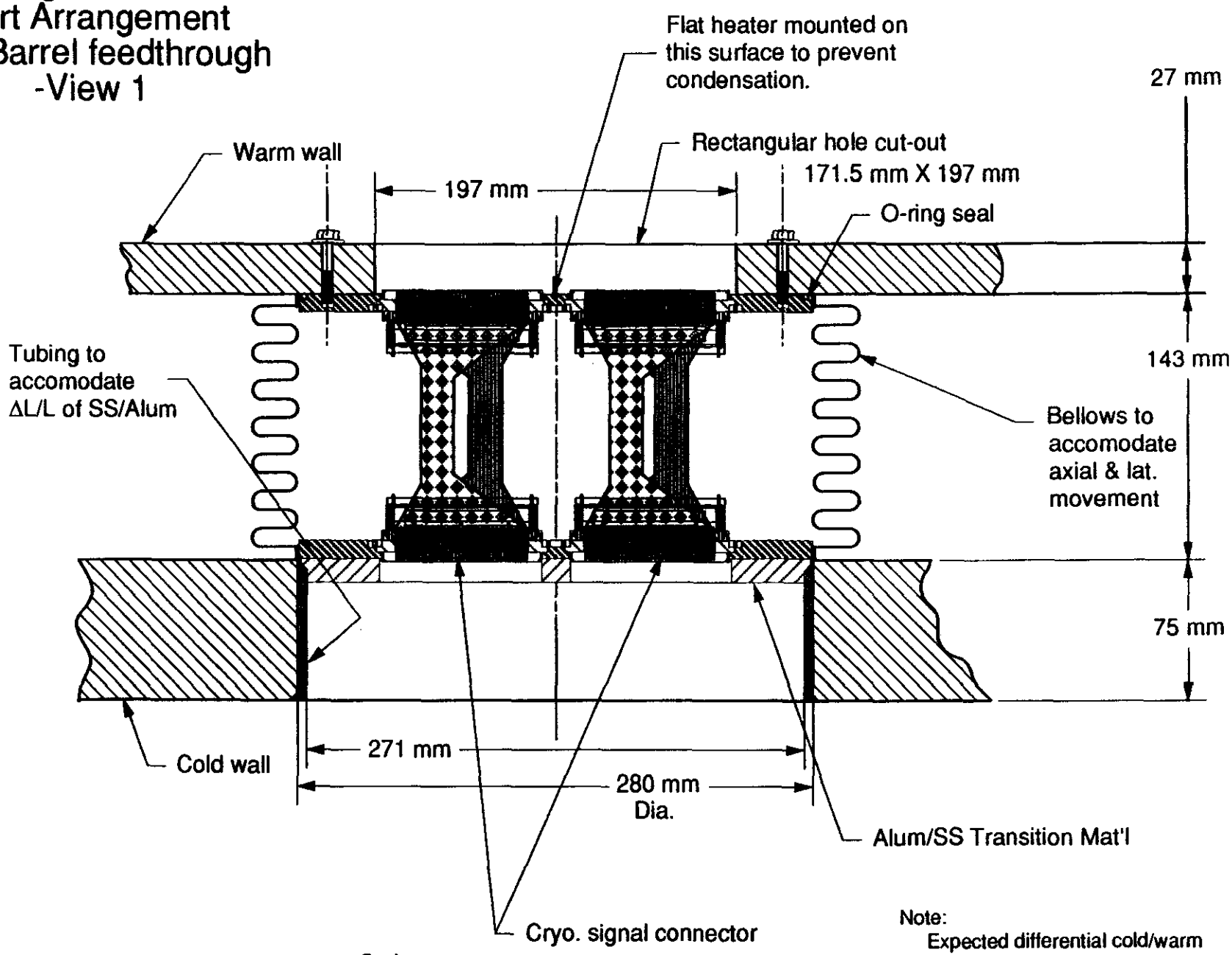

Note:
Expected differential cold/warm wall movement on cooldown
Axial - 8 mm
Lateral - 10 mm

Scale
50 mm

University of Washington
5/4/93 DAF

Fig. 1c

Typical Signal Port Arrangement Barrel feedthrough -View 2

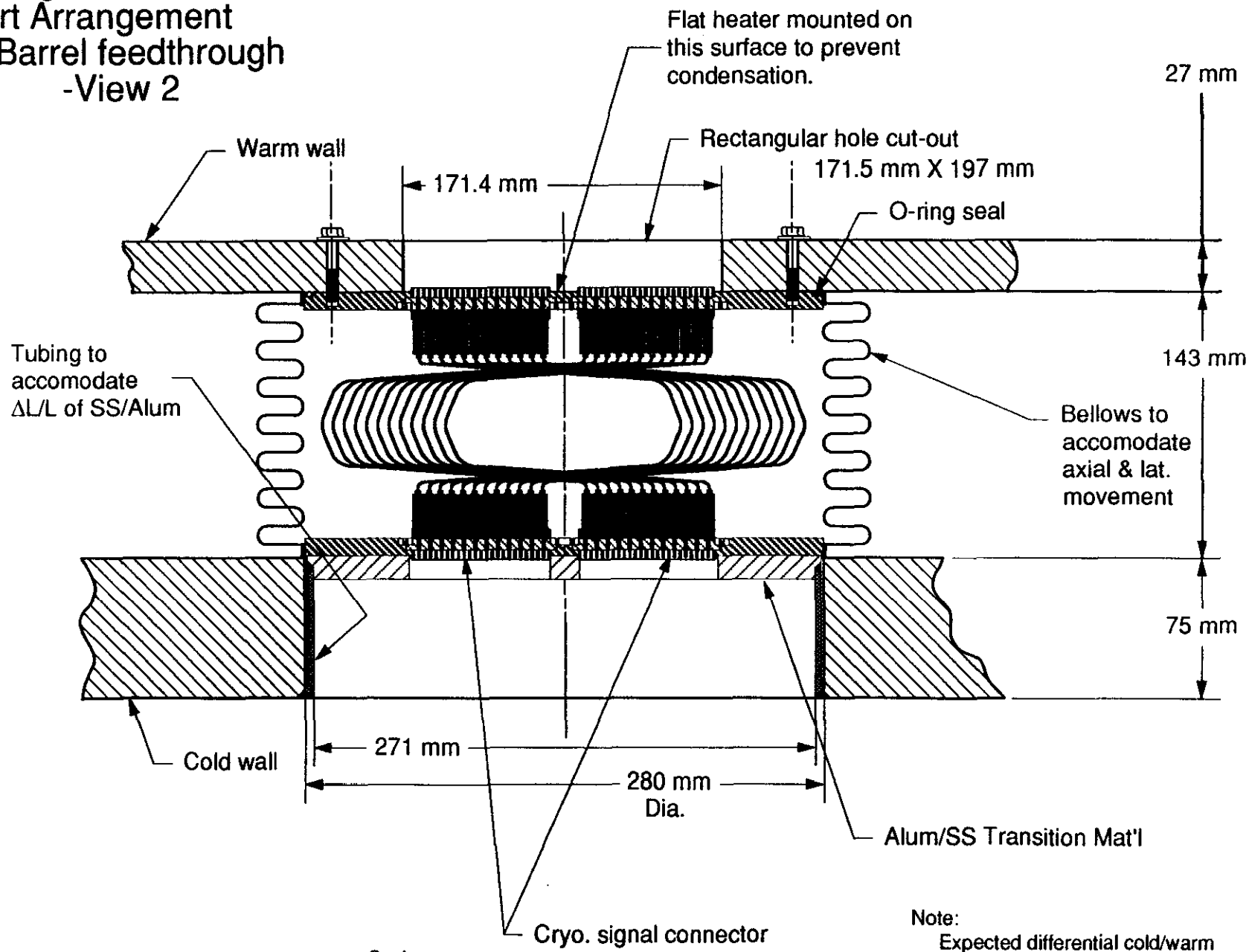

Scale

50 mm

Note:
Expected differential cold/warm wall movement on cooldown
Axial - 8 mm
Lateral - 10 mm

University of Washington
5/4/93 DAF

Fig. 1d

Connector in pieces

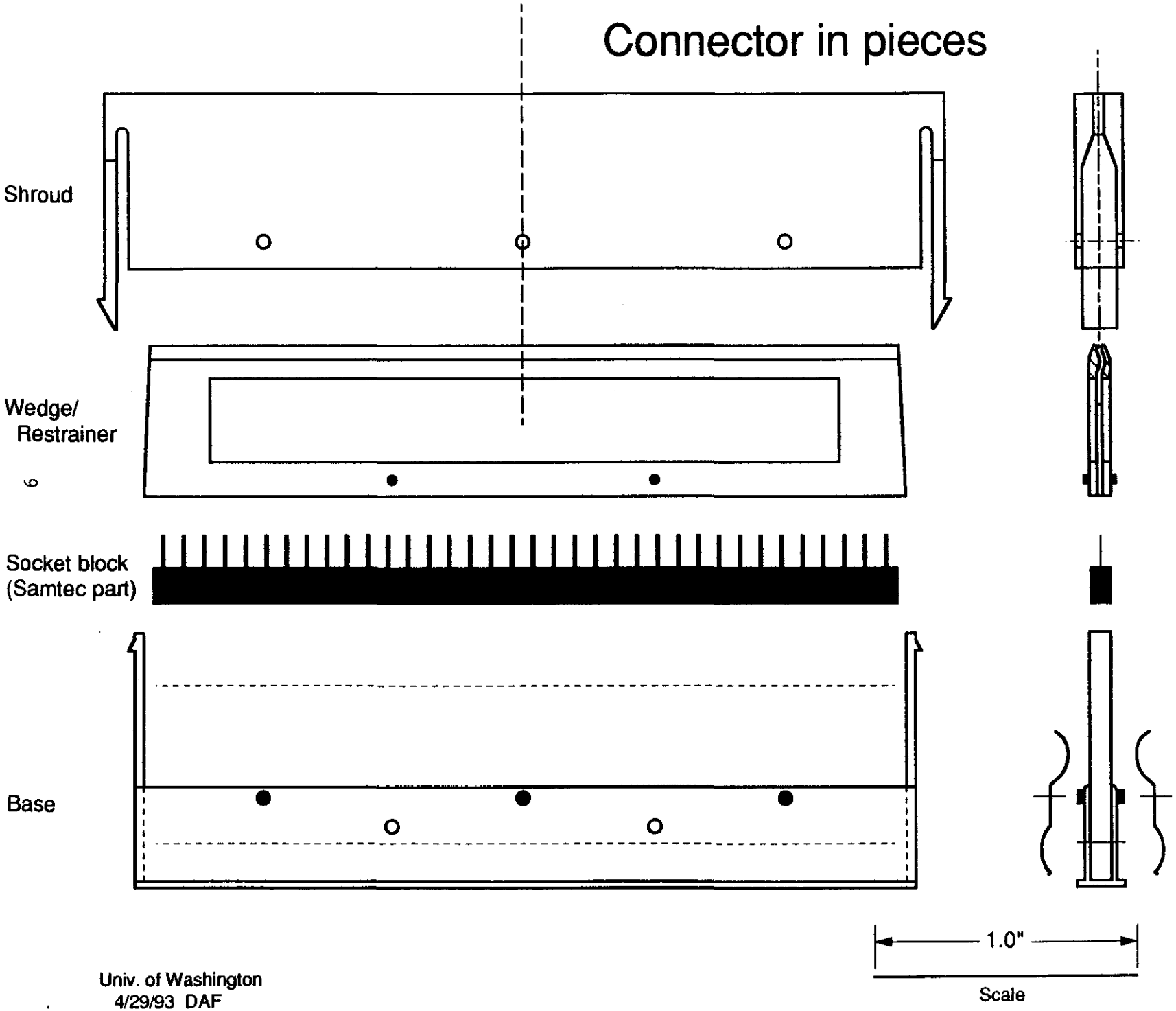

Univ. of Washington
4/29/93 DAF

Fig. 2a

Connector Assembly

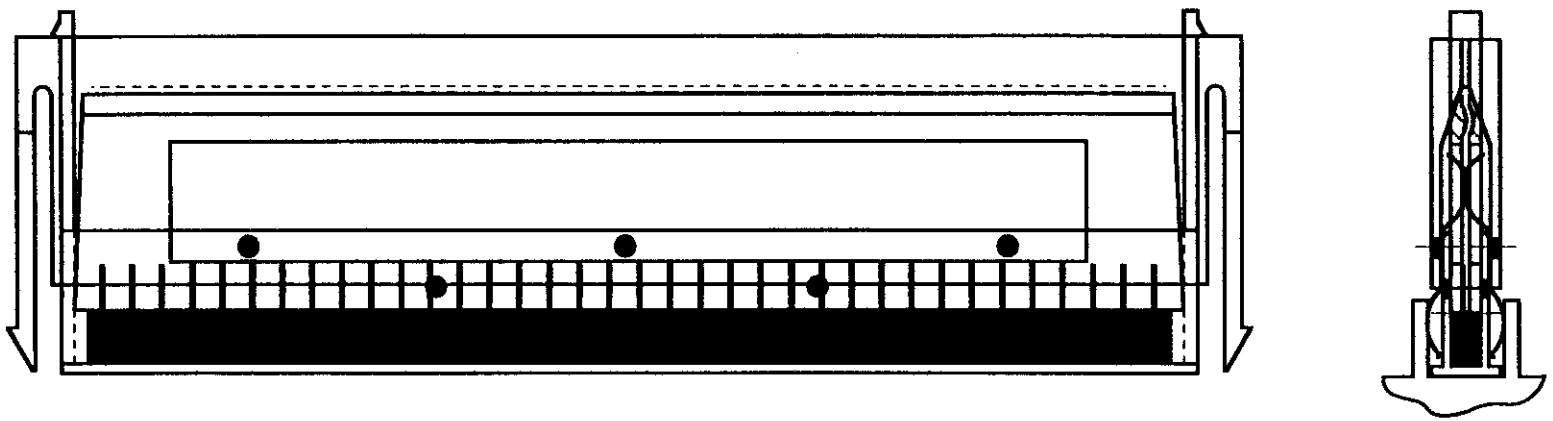

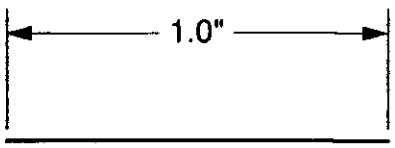

Scale

Univ. of Washington
4/29/93 DAF

Fig. 2b

Plan view of one end of 50 Ω Impedence cable. ("c" layer of Exploded view)

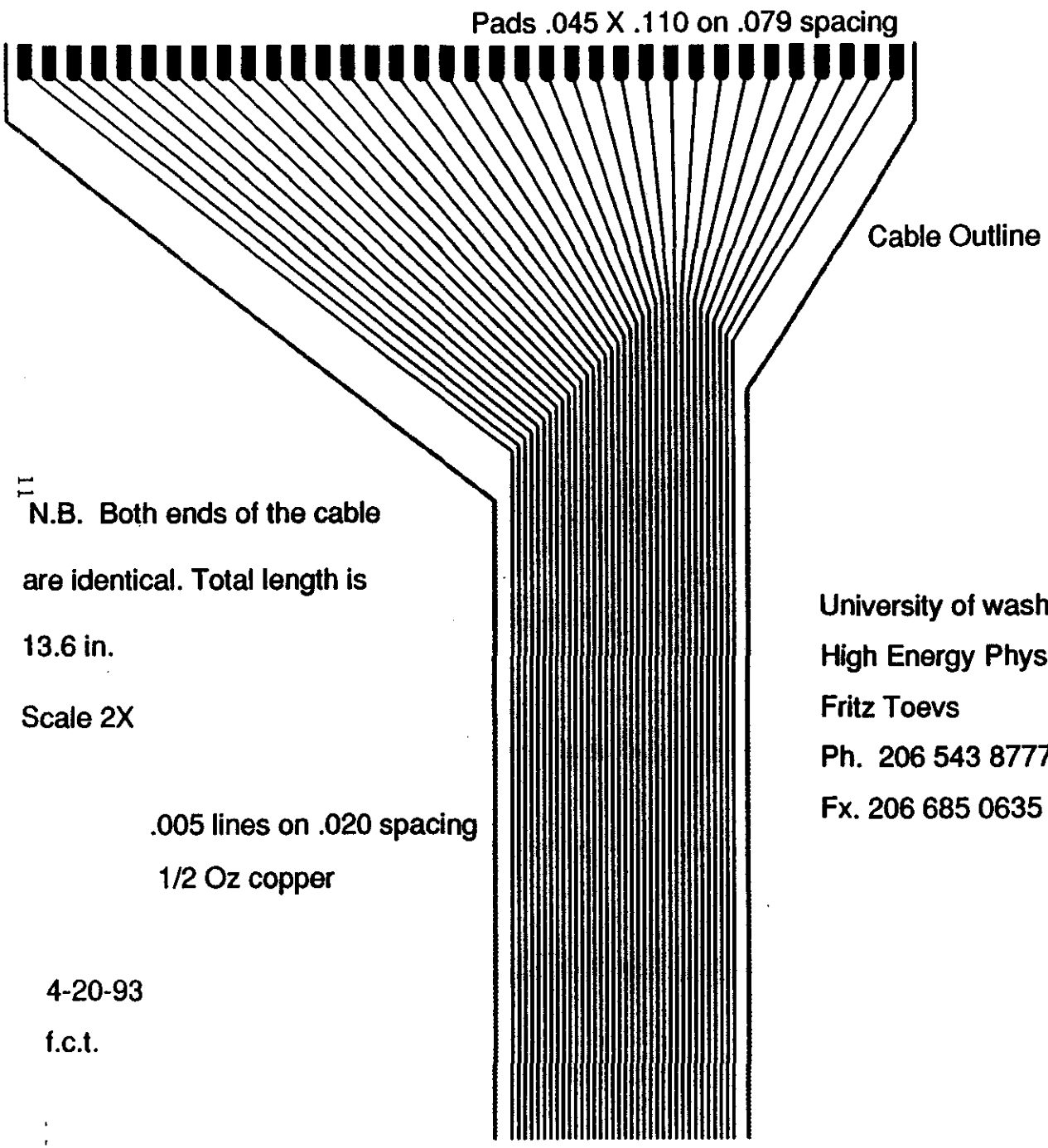

N.B. Both ends of the cable

are identical. Total length is

13.6 in.

Scale 2X

.005 lines on .020 spacing

1/2 Oz copper

4-20-93

f.c.t.

University of washington

High Energy Physics

Fritz Toevs

Ph. 206 543 8777

Fx. 206 685 0635

Fig. 3a

EXPLODED VIEW OF 50Ω FLAT CABLE STRUCTURE.

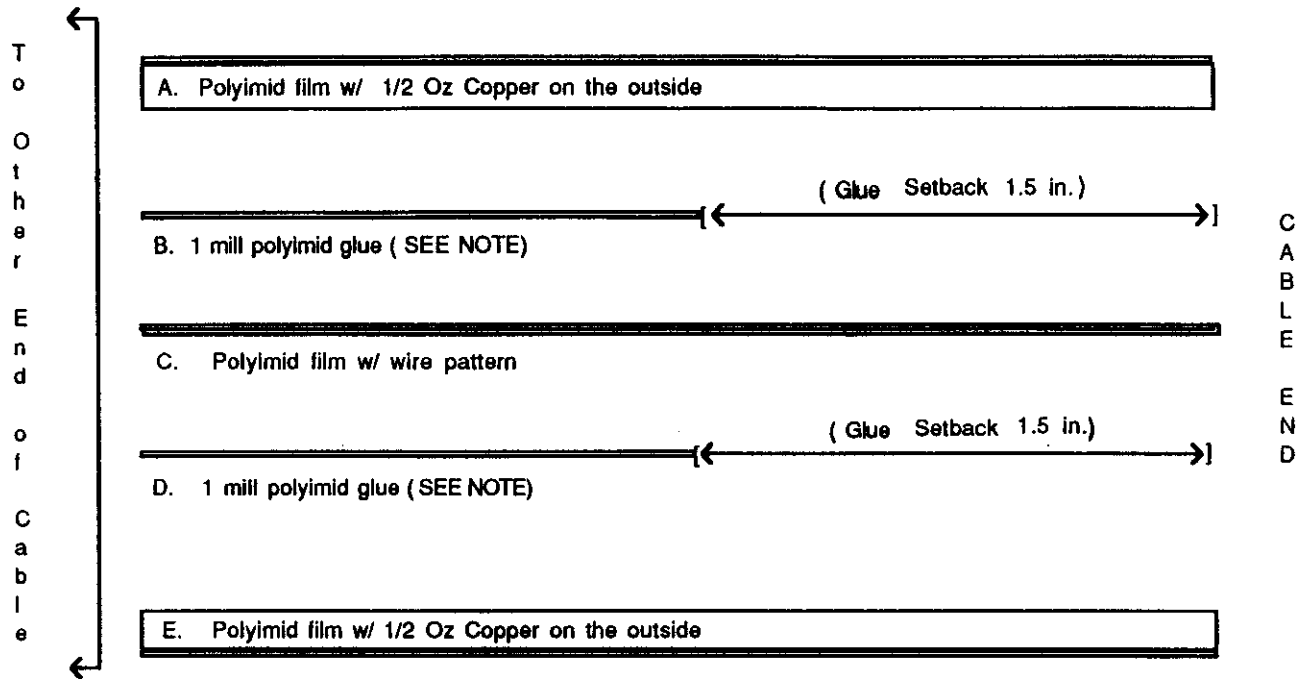

N.B. Both ends of cable identical.

Film thickness to be determined by 50 Ω Z of cable

Polyimid glue or any radiation hardend adhesive.

UNIVERSITY OF WASHINGTON
HIGH ENERGY PHYSICS
4-20-93 F.C.T.

Fritz Toevs
Ph. 206 543 8777
Fx. 206 685 0635

Fig. 3b