GEM TN-93-312

GEM Endcap Hadronic Modules

Paul M. Mockett
University of Washington

May 6, 1993

Abstract:

The fully loaded endcap calorimeters weigh about 300 metric tons each and are followed by an additional two interaction lengths of passive absorber. The 12 interaction lengths of active calorimetry is necessary to protect the endcap muon system from too much punch through. The absorber must be instrumented since otherwise unmeasured fluctuations in the muon energy loss would degrade the muon resolution. The active region of the endcap hadronic modules extends to pseudo rapidity of about 3.3. From that point the forward calorimeter continues the coverage to even larger pseudo rapidity. Monte Carlo studies[1] show that a nonprojective inner boundary in the endcaps is preferred over a projective one in order to minimize the missing energy fluctuations. It is still an open question whether the inner boundaries of the modules should be made projective or parallel to the beam. That fine point still remains to be answered by additional Monte Carlo studies. Because the photon energies from Higgs decay are typically higher in the endcap than in the barrel and hence the stochastic term in the electromagnetic energy resolution not as critical, liquid argon will be used for the cryogenic fluid. Liquid argon fortunately is much cheaper than liquid krypton as well.

GEM ENDCAP HADRONIC MODULES

Introduction

The fully loaded endcap calorimeters weigh about 300 metric tons each and are followed by an additional two interaction lengths of passive absorber. The 12 interaction lengths of active calorimetry is necessary to protect the endcap muon system from too much punch through. The absorber must be instrumented since otherwise unmeasured fluctuations in the muon energy loss would degrade the muon resolution. The active region of the endcap hadronic modules extends to pseudo rapidity of about 3.3. From that point the forward calorimeter continues the coverage to even larger pseudo rapidity. Monte Carlo studies[1] show that a nonprojective inner boundary in the endcaps is preferred over a projective one in order to minimize the missing energy fluctuations. It is still an open question whether the inner boundaries of the modules should be made projective or parallel to the beam. That fine point still remains to be answered by additional Monte Carlo studies. Because the photon energies from Higgs decay are typically higher in the endcap than in the barrel and hence the stochastic term in the electromagnetic energy resolution not as critical, liquid argon will be used for the cryogenic fluid. Liquid argon fortunately is much cheaper than liquid krypton as well.

Endcap Hadron Modules

There are six different types of endcap hadronic modules as shown in Fig. 1a,-,g. The modules are labeled INNER HADRON A, B, C and OUTER HADRON A, B and C. All the modules are supported from keys mounted on the washers that engage grooves in the module end plates. The radial position is fixed by bolting the modules to the washers using ears or brackets. Slotted holes and Belleville washers are used at one end of the modules to accommodate the differential thermal contraction of the copper module structure and the aluminum support structure. This is very similar to the SLD mounting scheme. The crack between modules averages 1 mm between the ground plates because of tolerance limits and 5 mm between the tiles because of cross talk limits. The modules will be mounted with various rotations so that there are no projective cracks. The INNER HADRON A module has no rotation, the INNER HADRON B module has an 18 degree rotation and the INNER HADRON C module has a 9 degree rotation. The OUTER HADRON A module has no rotation, the OUTER HADRON B module has a 9 degree rotation and the OUTER HADRON C module has no rotation. In this way there will be no cracks between sequential modules or between the inner and outer modules. The active

---

[1]M.. Shupe, GEM TN-92-243

inner radius of the INNER HADRON A and B modules is about 263 mm. All plates, electrodes and tiles are oriented perpendicular to the beam axis.

The cell structure in the modules is a sequence of copper ground plates, copper-Kapton electrodes and copper tiles. See Fig. 2a, the Standard Cell. The basic cell is composed of one ground plate, three electrode layers, a tile layer and three more electrode layers. An additional ground plate is added to the last cell to complete the structure. The copper in the first and last cells is reduced to compensate for the aluminum in the washers and the extra ground plate. The signal is collected from the tile centered in each cell. The Kapton and G-10 electrodes and the tiles provide the segmentation for the modules. See Fig 2b,c. The ground plates and tiles are made from 27 mm copper. The tiles are glued between 0.5 mm etched G10 boards to give them structural integrity and also supply the capacitive decoupling from the high voltage. The gaps between the tiles are mostly filled with argon to minimize the capacitive coupling between towers. The Argon gaps are 2 mm. The charge collection utilizes the electrostatic transformer technique[2] with a transformer ratio of four. A ratio higher than the barrel is used in the endcaps because the charge sampling fraction in argon is less than in krypton.

Operating at 2 kV, simulations confidently indicate that space charge will not be a problem at a luminosity of 10^{33} but may be a problem at 10^{34} at the very largest η. This matter is under investigation and once the uncertainty on the positive ion mobility is removed the appropriate increase to the operating voltage will be made for the largest η region if necessary. The allowed luminosity scales as the square of the high voltage. The ground and high voltage pads on the electrodes and tiles are decoupled from the true ground and high voltage by means of resistors. Because of the dark current there is an upper limit on the allowed magnitude of the resistance employed that keeps the voltage drop from the true value to be less than 1 volt. At 10^{34} there is about a 1 μA current in a layer within a tower cell. Hence a decoupling resistor as large as 1 MΩ could be safely used. This is about an order of magnitude larger resistance than required so as to not contribute significantly to the amplifier noise.

At the outer radius there are 40 modules of each type. These are segmented into $\Delta\eta$ x $\Delta\varphi$ towers of 0.07854 x 0.07854 making each module just two tiles wide. This structure facilitates the wiring of the signals and high voltage because it can be done on the exposed

[2]J. Colas and WE. A. Wenzel, Proceedings of the Workshop on Calorimetry for the Supercollider, 643-648(1989).

edges of the tiles. Fig. 3 shows the structure of module OUTER HADRON B, the largest of the outer modules. A module has 16 mm thick top and a bottom plates bolted to the ground plates. This arrangement when analyzed as a Veirendeel Truss, provides the necessary stiffness across the module with a safety factor of about ten. A semi-empirical formula indicates a sag of less than 0.1 mm for a module oriented at the top or bottom module This sag is confirmed by a finite element analysis which gives nearly the same value(see Fig. 4). A sag of up to 1 mm would be within the required tolerance. The electrodes and tiles are supported from the ground plates on G10 rods. Four 8 mm diameter rods are sufficient to limit the sag of the tile layer to less than 0.03 mm. Inner Hadron A and B omdules when oriented in the horizontal position have a 0.4 mm sag at the narrow end.

There are 20 modules of each of the inner types. These would naturally be four tiles wide with the standard segmentation; however these modules begin at their outer radius with a $\Delta\eta \times \Delta\varphi$ of 0.03927 x 0.15708 which keeps each tower area constant but allows the wiring to be done at the exposed tile edge as was done for the outer modules. This segmentation does not affect the trigger scheme or the jet spatial resolution. At about half the distance to the beam line the segmentation changes to 0.07854 x 0.15708 because the towers are getting small in the φ dimension. This is shown in Fig. 5.

The OUTER HADRON A module measures the energy of showers that have already developed in the barrel and passed through several unsampled layers of cryostat wall, cables, liquid krypton and liquid argon. This lost energy must be sampled by a massless gap. Although a passive massless gap is possible by reducing the absorber in the first cell of each module we plan to make it an active gap sampled with two layers of argon and a separate amplifier for each tower. The high voltage electrodes for these gaps are made from etched Kapton or G10 boards and are supported from the end plate of the module.

Signal Microstriplines and Amplifiers

Kapton microstriplines carry the charge signal to amplifiers mounted on the modules as shown in Fig. 6. These microstriplines are connected to the tiles and ground plates by pins soldered to them that plug into sockets[3] pressed into holes drilled in the tiles and ground plates. The pins are made long enough so that there is some flexibility between

[3]Such sockets are made for example by Augat - catalog 8134-HC-12P2. The 0.030" diameter pins may be custom made rather cheaply.

the sockets and the microstriplines to accommodate slight registration differences. Thermal contraction of the microstriplines is essentially the same as that of the copper module. These microstriplines pass through notches in the ground plates so they are recessed 2 mm from the module edge. Because it is critical to keep the microstripline contribution to the capacitance low while at the same time keeping the lines impedance low the amplifiers will be mounted on each side of a module. One of the copper ground plates will be narrowed by 2 cm on each side to make a pocket that will hold an amplifier mother board. This ground plate is also an ideal heat sink that will carry the amplifier heat to the vessel walls where the external cooling can remove it. To assure good coupling between the amplifier board and the ground plate, the board will plug into sockets embedded in the ground plate. These sockets are similar to those used for the signal line connections. The microstriplines will plug directly into the amplifier board. The signal lines will be connected to the mother board at the top plate end.

Resolution

We have scaled the data of Fabjan *et al.*[4] for a liquid argon and iron calorimeter to determine the resolution of this liquid argon and copper calorimeter . To be conservative, we assume the sampling fluctuations are dominated by the electromagnetic sampling. The measurement at 10 GeV found a hadron resolution of $52\%/\sqrt{E}$. This hadron resolution implied that the shower fluctuations contributed $51\%/\sqrt{E}$. Folding in the sampling fluctuations for our configuration along with this shower fluctuation gives an expected resolution of $58\%/\sqrt{E}$. This resolution is similar to that measured by the SLD Collaboration for a liquid argon calorimeter using 12 mm lead plates followed by a gas sampling and 2" Fe absorber "tail catcher". Our estimate of the resolution was obtained without the use of shower weighting techniques.

Electromagnetic "Tail Catcher"

The first section in INNER HADRON A will serve as a "tail catcher" for the endcap EM. This section is two cells deep and adds 7.5 X0 to the shower absorption. By modifying the cell structure to compensate for the material between the EM and hadron module, this section maintains the excellent electromagnetic resolution performance up to 500 GeV.

---

[4] C. Fabjan, *et al.*,, NIM 141: 61(77)

The Electrostatic Transformer

The amplifier signal to noise is a critical issue in liquid argon calorimetry and especially in hadron calorimetry. Hadron showers spread over a large volume of the calorimeter. Hence hadron calorimeter segmentation is comparatively coarse compared to that usually employed for electromagnetic calorimetery. Hence a large volume of calorimeter must be handled by a single amplifier. Costs associated with amplifiers and signal processing also dictate that a large hadron calorimeter volume be handled by a single amplifier. The situation is aggravated where high rates require short shaping times which both reduces the signal and increases the noise. The signal to noise ratio is decreased by the shaping time to the 3/2 power.

The noise in the amplifier is proportional to the load capacitance plus a constant. If the sampling layers are read out in parallel as is conventionally done, the signal is proportional to the number of sampling layers but unfortunately so is the load capacitance. However if the sampling layers are connected in series, then the capacitance drops faster than the signal so that the signal to noise is improved in principle by the number of layers in series. Unfortunately because of stray capacitances, the transmission line connection capacitance and the amplifier input capacitance, the ideal relation cannot be met but rather there is an optimum number of layers to be connected in series. The number of sampling layers is also limited by density considerations as well as costs.

This series readout arrangement has become known as the electrostatic transformer coupling in analogy with the use of small transformers that have been used to accomplish the same end when no large magnetic is present. One half of a cell in the endcap modules can be viewed as a series of eight different capacitors. The sequence is liquid argon gap capacitance, Kapton capacitance repeated three times followed by liquid argon gap capacitance and G10 capacitance. The amplifier senses voltages changes across this series capacitance. When a charge moves in one of the liquid argon gaps it induces charge on the electrode and changes the voltage in that capacitor and hence across the series capacitance by an amount

$$\Delta V = \Delta q / C_g,$$

where ΔV is the voltage change across the series capacitance caused by the induced charge Δq. That is, the voltage change across the series capacitor is the same at that across the

individual capacitor element. The amplifier reacts to bring the voltage change back to zero and there for removes an amount of charge $\Delta q'$ given by

$$\Delta q' = C_T \Delta V = \Delta q \, C_T/C_g.$$

Since the electric fields in the series gaps point in the same direction, charges induced in each of the four gaps add and the amplifier collects the total charge

$$\Delta q_T = \frac{C_T}{C_g} \sum_{i=1}^{4} \Delta q_i \cdot$$

Hence if only the gap capacitances were involved, the collected charge would be 1/4th the total induced charge while the load capacitance has dropped to 1/16th of its parallel value. Hence in this approximation the signal to noise has improved by a factor of four. The capacitance of a Kapton electrode is 35 times that of an argon gap capacitance and almost negligible. The G10 contributes about 13 times that of an argon gap. In total these extra capacitances reduce the charge collected by about 4% from the ideal but they also reduce the load capacitance by the same amount.

The ideal arrangement is further influenced by stray capacitances. Using thin electrodes greatly reduces the stray capacitance between electrodes over that which would be present were tiles used instead. The single tile layer that is used in the cell also contributes little to the cross talk because for that layer the neighboring amplifiers essentially see a shaped pulse differentiated due to the capacitive coupling; hence crosstalk in that layer contributes nothing in first order to the signal in the neighboring towers because the derivative is zero at the sampling peak. However in all the other gaps most of the charge is trapped for an RC time and contributes to neighboring tower signals. Some the spacing between towers is fixed at 2 mm but the transverse tower dimensions vary considerably, the size of the cross talk ranges from about 5% for the largest towers to about 30% for the smallest towers.

Module Construction

The plates and tiles are machined from 27 mm thick hot-rolled copper plates. These can be purchased with ±0.05 mm thickness tolerance. The top and bottom plates are machined from 16 mm thick copper plates. The tiles are glued between two 0.5 mm G-10 printed circuit boards. The boards have been etched with the tile pattern keeping a 2 mm

gap between the pads and from the board edges. The pads are electrically interconnected using 100KΩ resistive ink connections. The tiles are assembled using 4 mm spacers between tiles and a jig surrounding them. The injection molded spacers are shaped to allow the free circulation of the liquid argon between them. At present argon is the lowest dielectric material available. Kapton printed circuit boards serve as intermediate electrodes between the ground plates and tiles.

The assembly begins with one of the end plates (first ground plate) lying flat on the assembly table. The top and bottom plates are bolted in place using a fixturing jig to assure their alignment accuracy. The design calls for 0.1 mm assembly accuracy. This tolerance can be relaxed if problems arise in holding to this precision. G-10 posts are inserted into holes in the end plate. These posts will support the electrodes and tiles between the ground plates as well as align them. Next three Kapton electrodes are placed on the posts with their spacer washers. They are kept separate from the ground plate and each other by 2 mm plastic washers that are placed on the posts between each layer. Additional spacers on a spindle are used at the pad corners for additional support of the Kapton electrodes. These are made from injection molded plastic(see Fig. 7). The tile layer is added and then three more Kapton electrode layers. This completes a cell. The second ground plate is lowered in place and bolted to the top and bottom plates. This plate captures the free end of the G-10 posts. This procedure is repeated until all cells have been added. Since the plates are bolted at fixed positions there is no tolerance build up. This fixed spacing enables the Kapton signal lines to have a predetermined spacing between pins. The high-voltage wiring is added to complete the module. The module is moved to a special clean room for a final cleaning and high voltage testing. The module is placed on a rotator that enables the high-voltage tests to be done at all angles. After high-voltage testing, plastic covers are inserted between the ground plates to keep the gaps free of dirt. Following successful testing, the amplifier boards are added by plugging them into sockets embedded in the ground plate and the microstriplines carrying the signals are connected by means of pins soldered to the lines that plug into sockets secured in the copper tiles and ground plates. The sockets are driven deep enough to allow some flexibility between the signal lines and the tiles and ground plates.

After the completion of the electrical and high-voltage tests, the module is bagged and crated to make it ready for shipment to the loading area at the SSCL.

Figure Captions

Fig. 1a,b,c,d, e,f,g. Endcap module cross sections and positions.

Fig. 2a. The standard cell. Shows the ground, Kapton electrode, G10 electrode and tile layers. The electric field direction is also shown. The direction shown would produce positive signal pulses.

Fig. 2b. This shows the Kapton and G10 electrode pattern for the first two cells of Outer Hadron B module.

Fig. 2c. This shows the tile arrangement for the first two cells of Outer Hadron B module.

Fig. 3. Isometric drawing of an Outer Hadron B module.

Fig. 4a. Finite element analysis of the Outer Hadron B module when the module is at the top position.

Fig. 4b. Schematic of Outer Hadron B module showing G10 support rods.

Fig. 5. The shows the endcap tower segmentation. (The drawing is for slightly different modules than presently under consideration but the segmentation is unchanged.

Fig. 6. This shows a cross section of the microstripline, the connector pin and the socket embedded in the copper.

Fig. 7. This shows a schematic of the proposed spacer system used to support the Kapton electrodes. The spacers are used at the electrode corners.

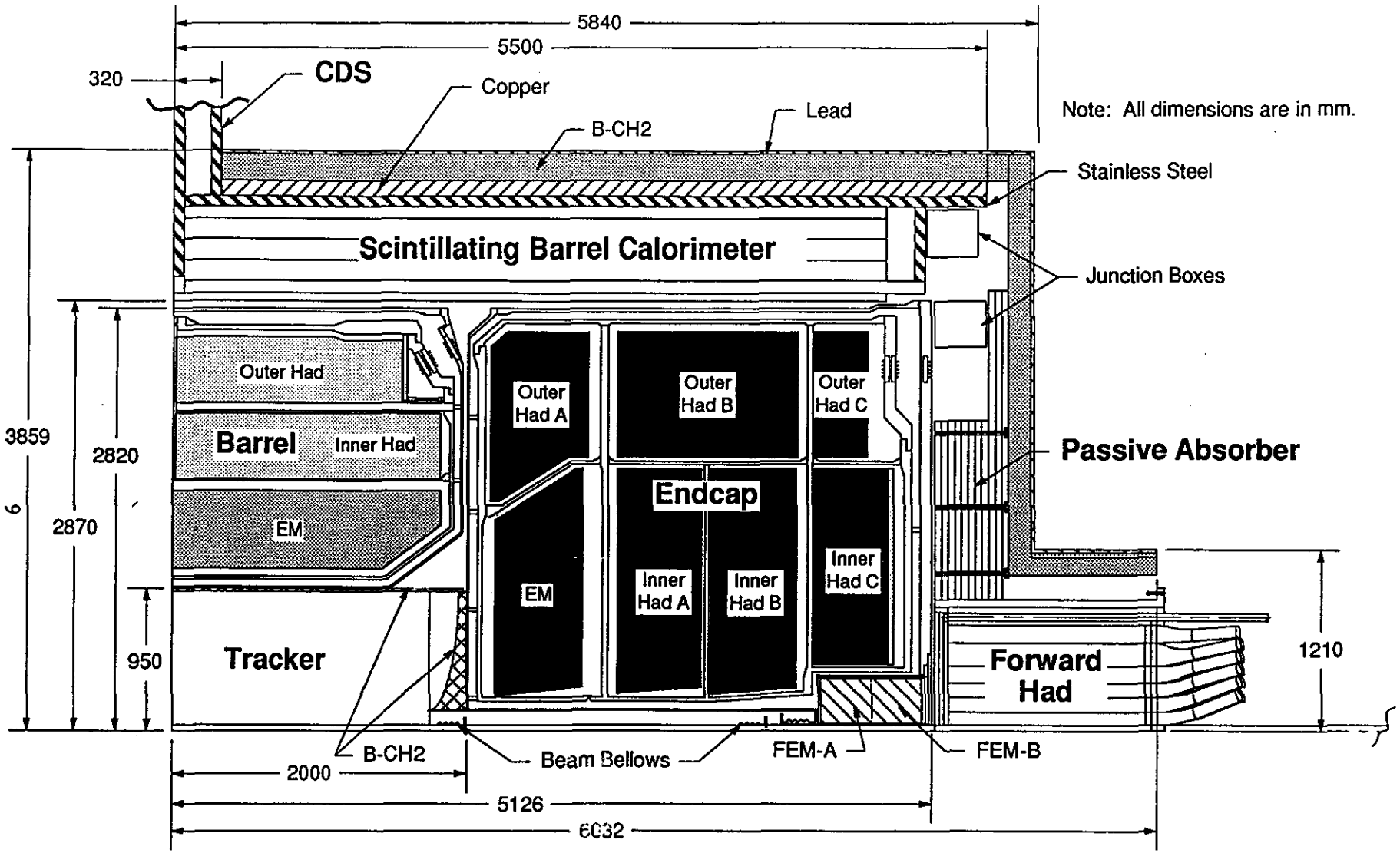

Barnstable: TDR Overview:930302
TDRBarrel.Cold/Warm TDRNdcp.stckCld

Fig. 1a

Frontal view of Inner Hadron A

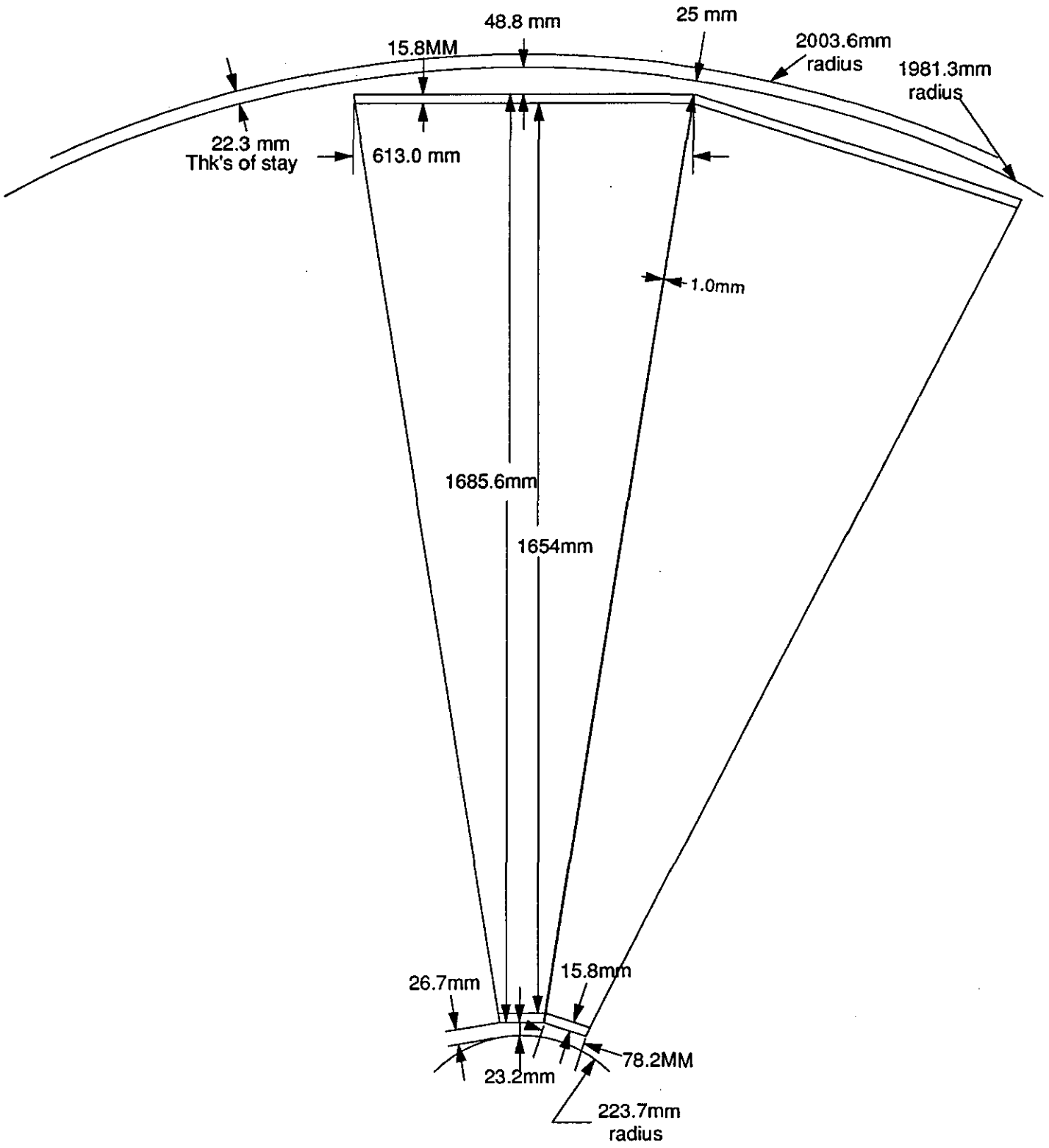

Fig. 1b

Frontal view of Inner Hadron B

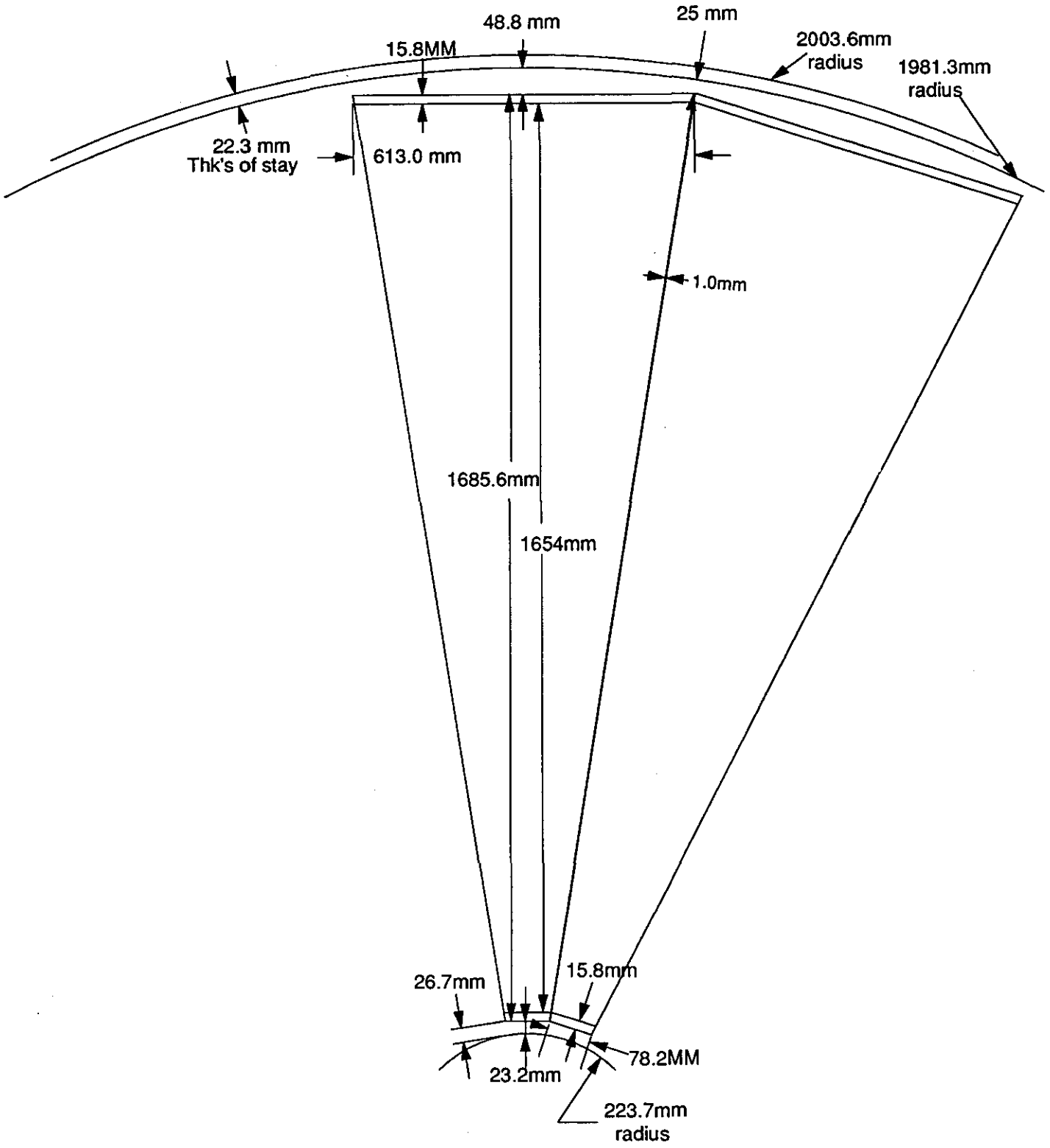

Fig. 1c

Frontal view of Inner Hadron C

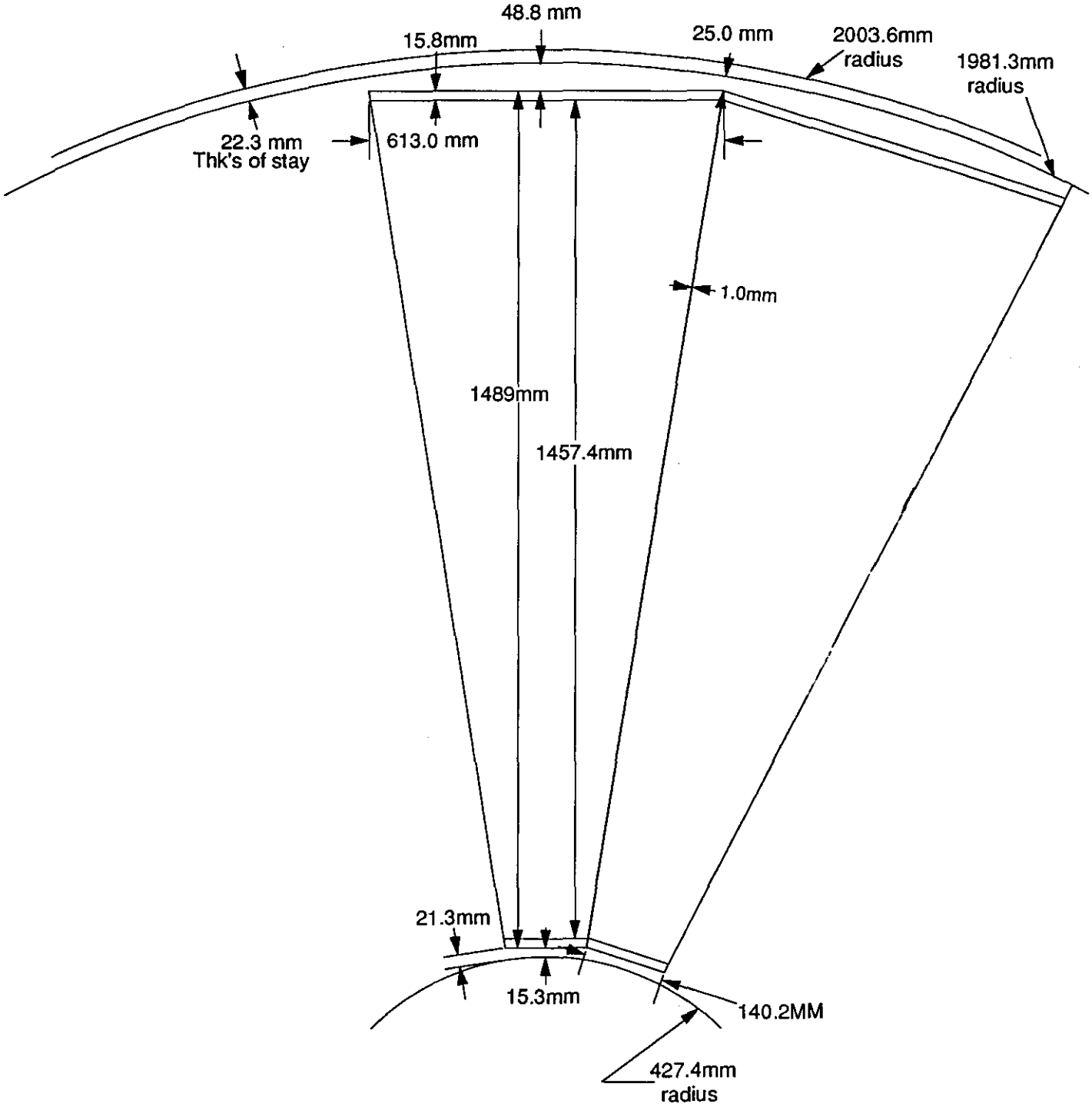

Fig. 1d

Frontal view of Outer Hadron A

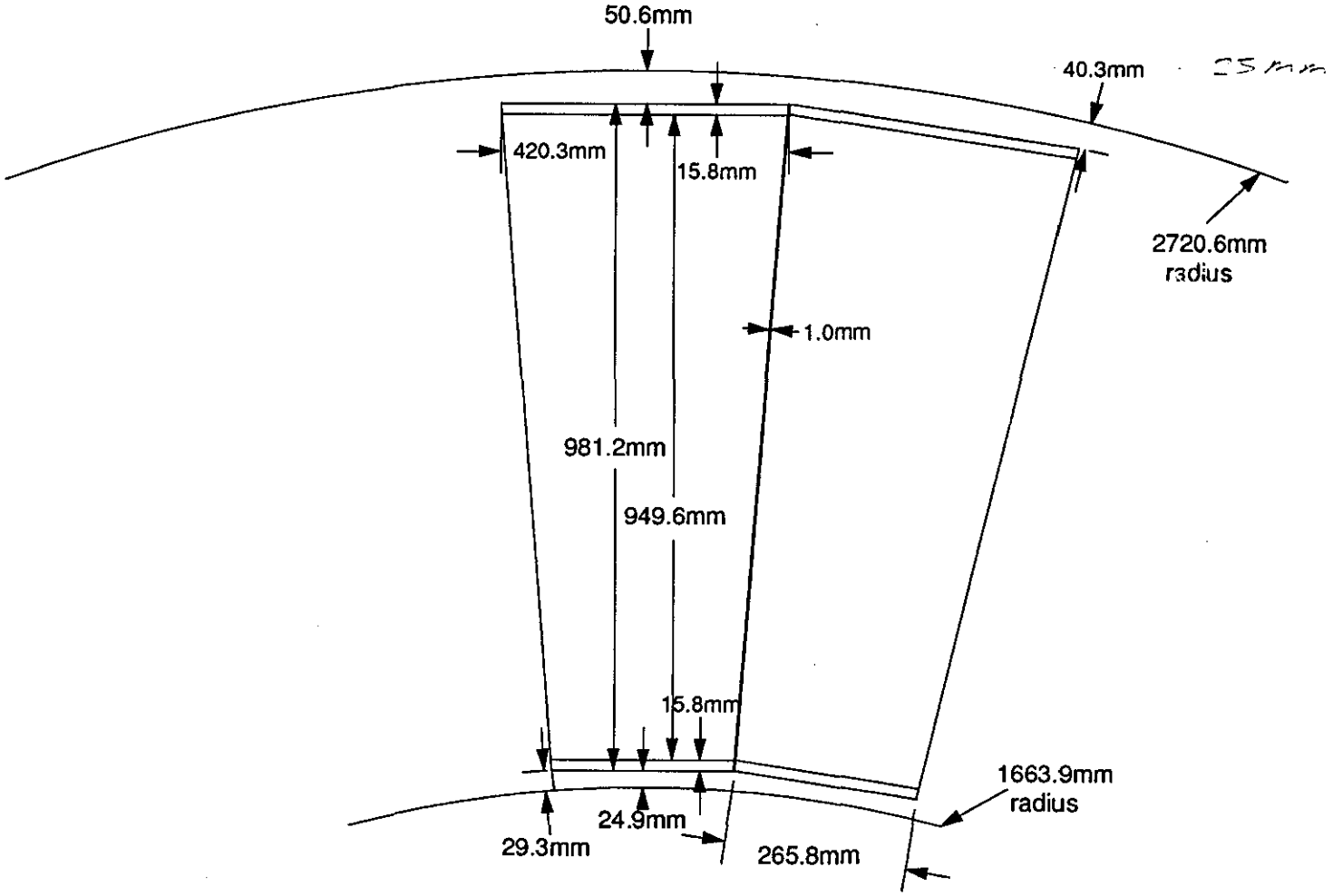

Fig. 1e

Frontal view of Outer Hadron B

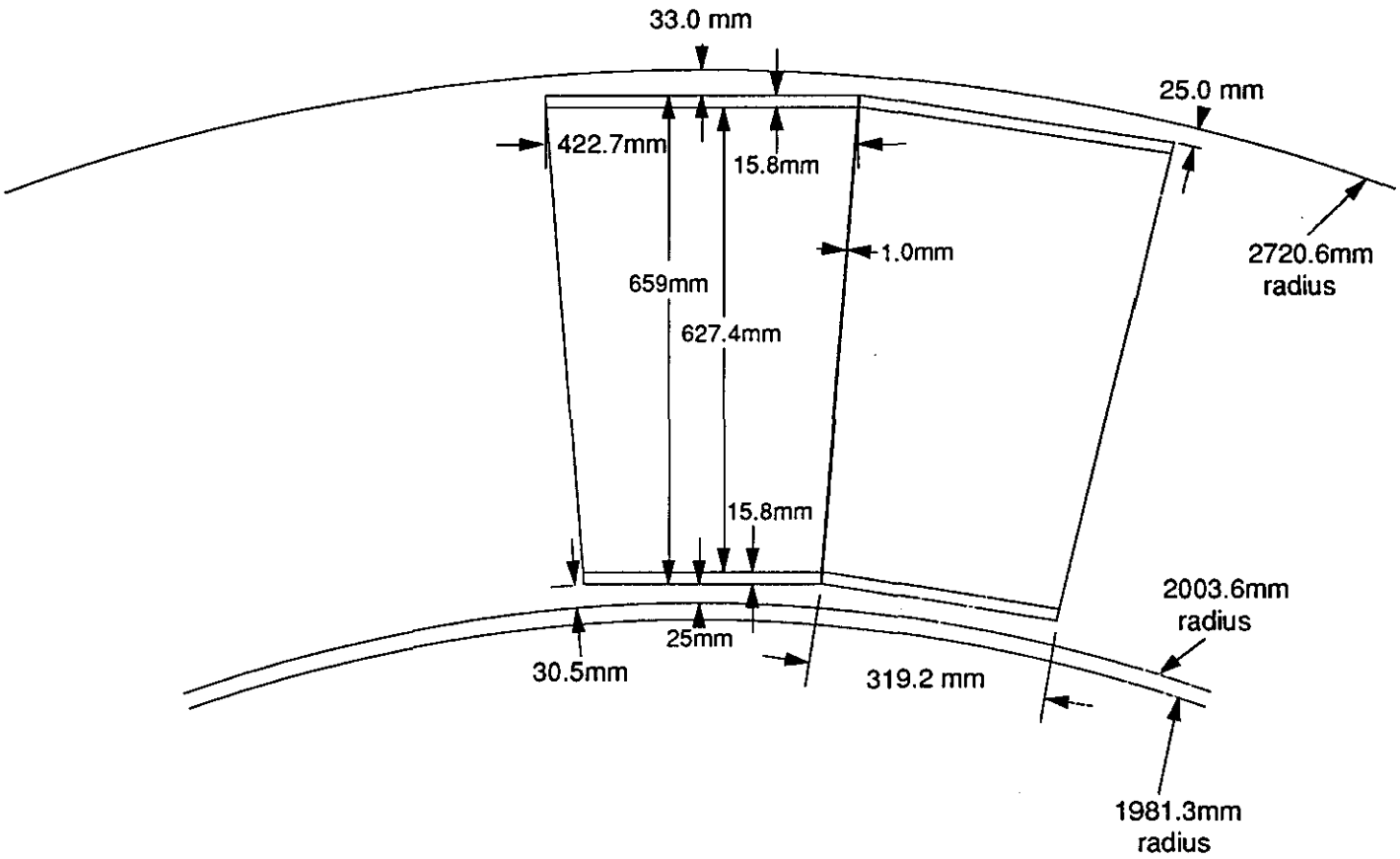

Fig. 1f

Frontal view of Outer Hadron C

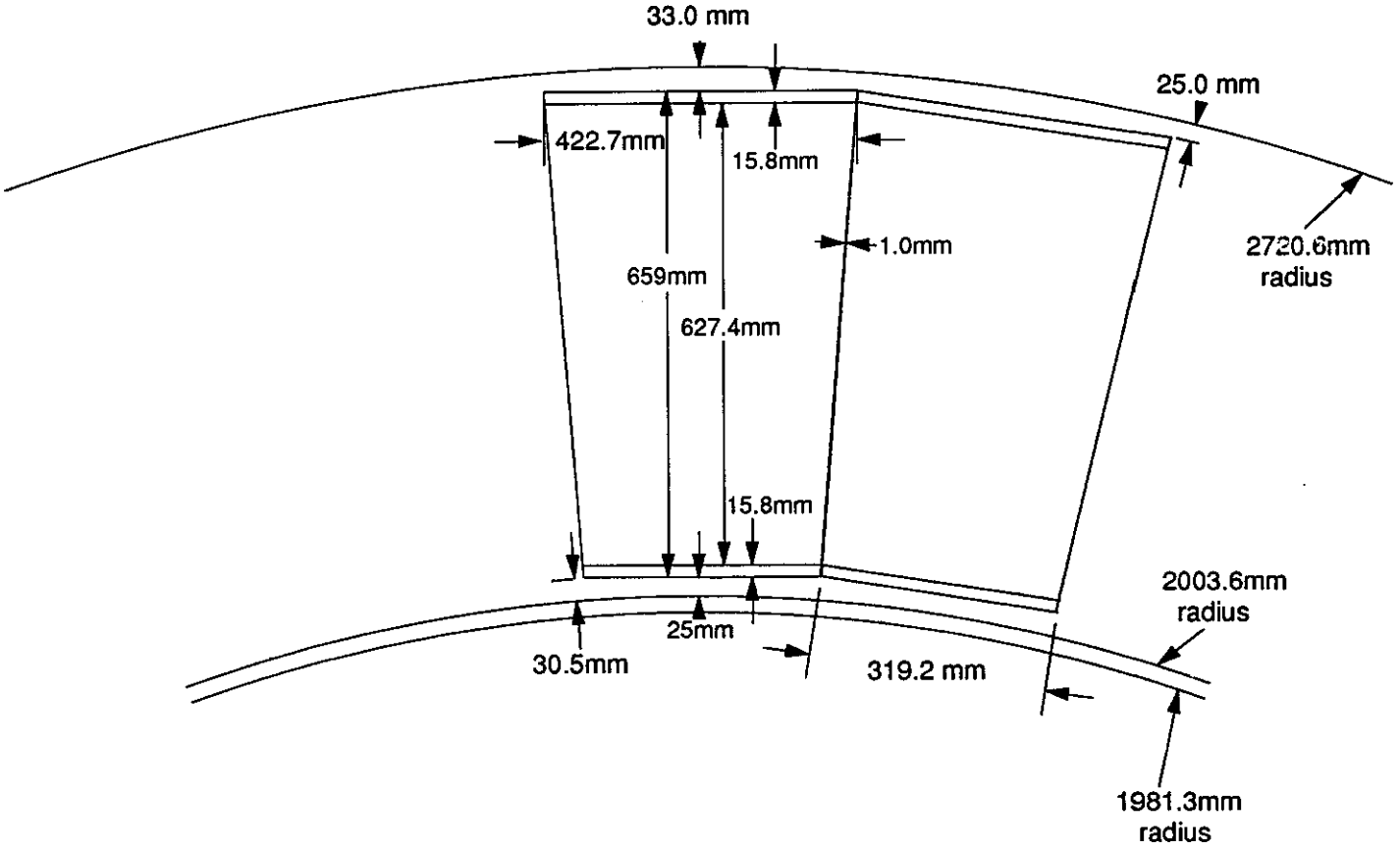

Fig. 1g

ELECTROSTATIC TRANSFORMER CONFIGURATION
For ENDCAP (Standard Cell)

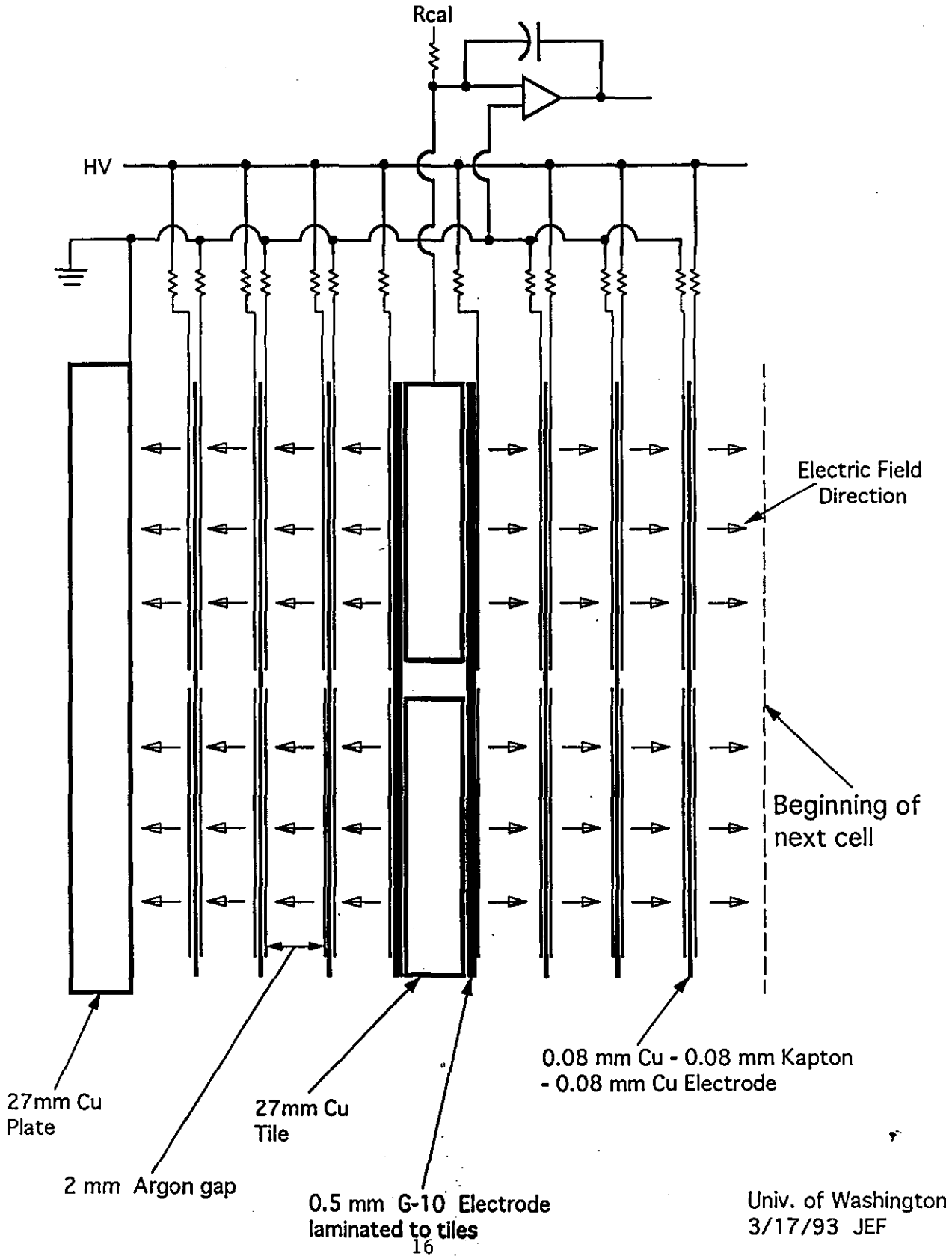

Univ. of Washington
3/17/93 JEF

Fig. 2a

Frontal View of 1st. and 2nd. "cell" Kapton electrodes and FR4 electrodes showing 2mm. gap between tile segments in Outer Hadron B

Drawn 4mm / 10mm Scale

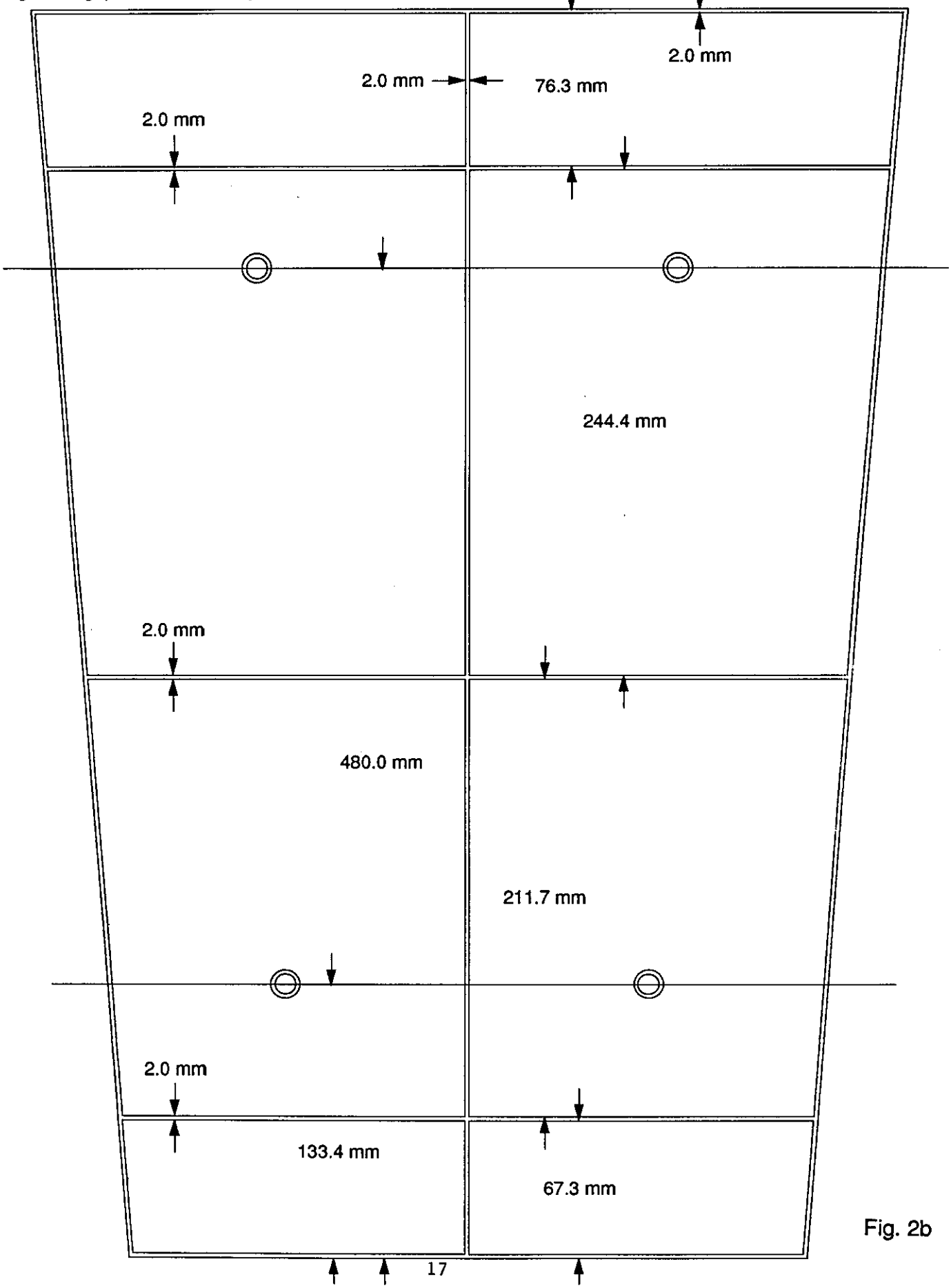

Fig. 2b

Frontal View of 1st. and 2nd. "cell" Tiles showing 4mm. gap between Tile segments in Outer B Hadron

Drawn 4mm / 10mm Scale

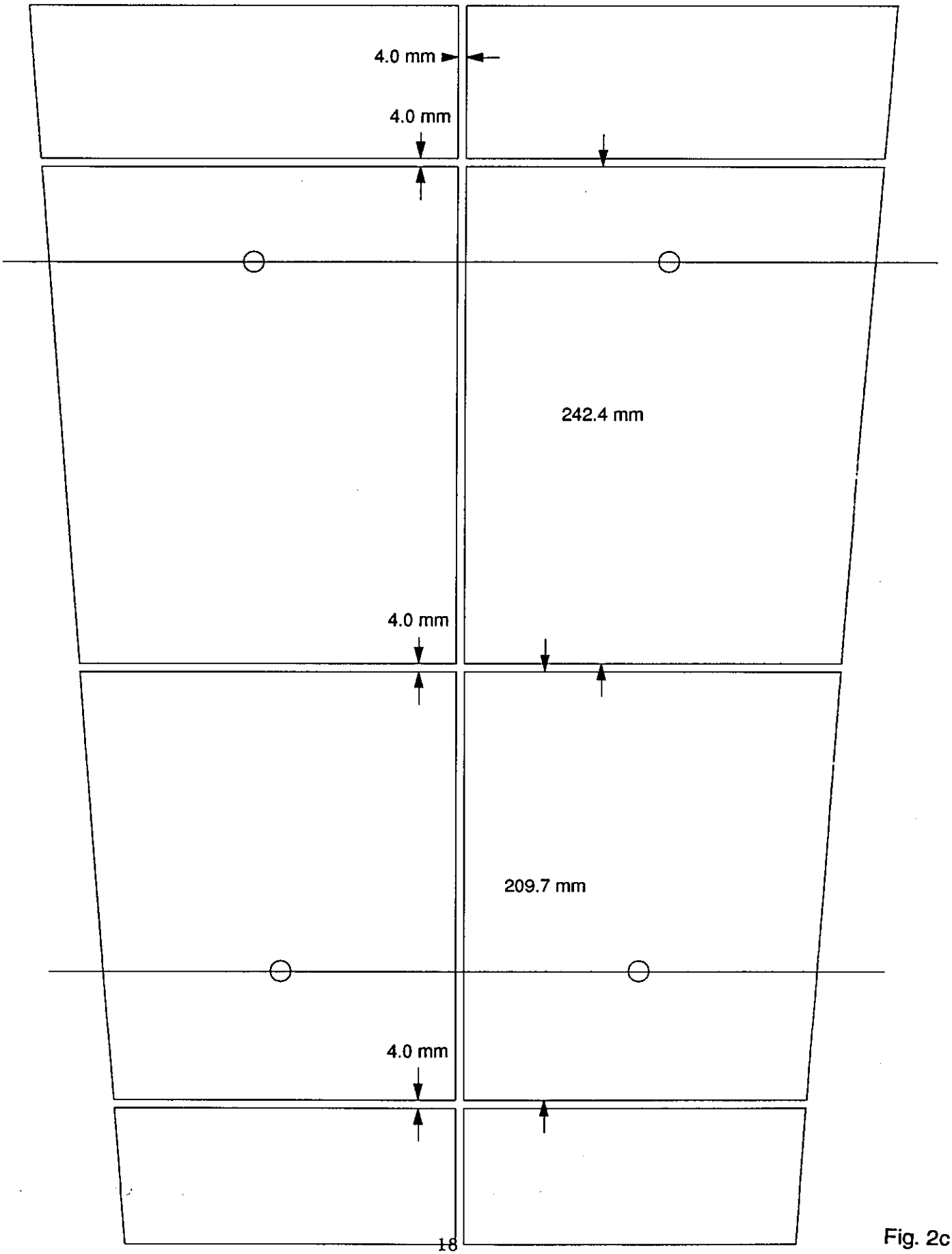

Fig. 2c

Hadronic Endcap Module

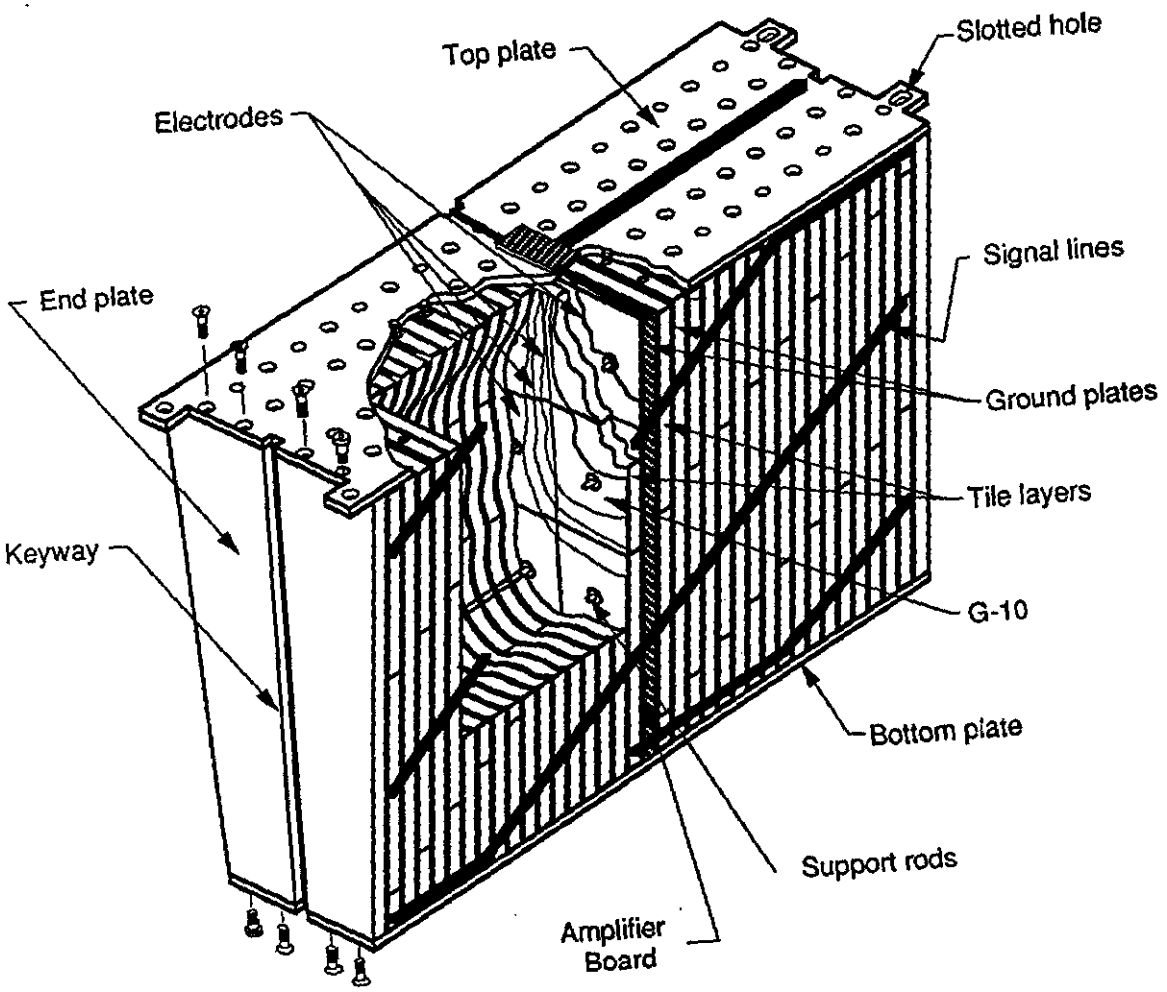

Fig. 3

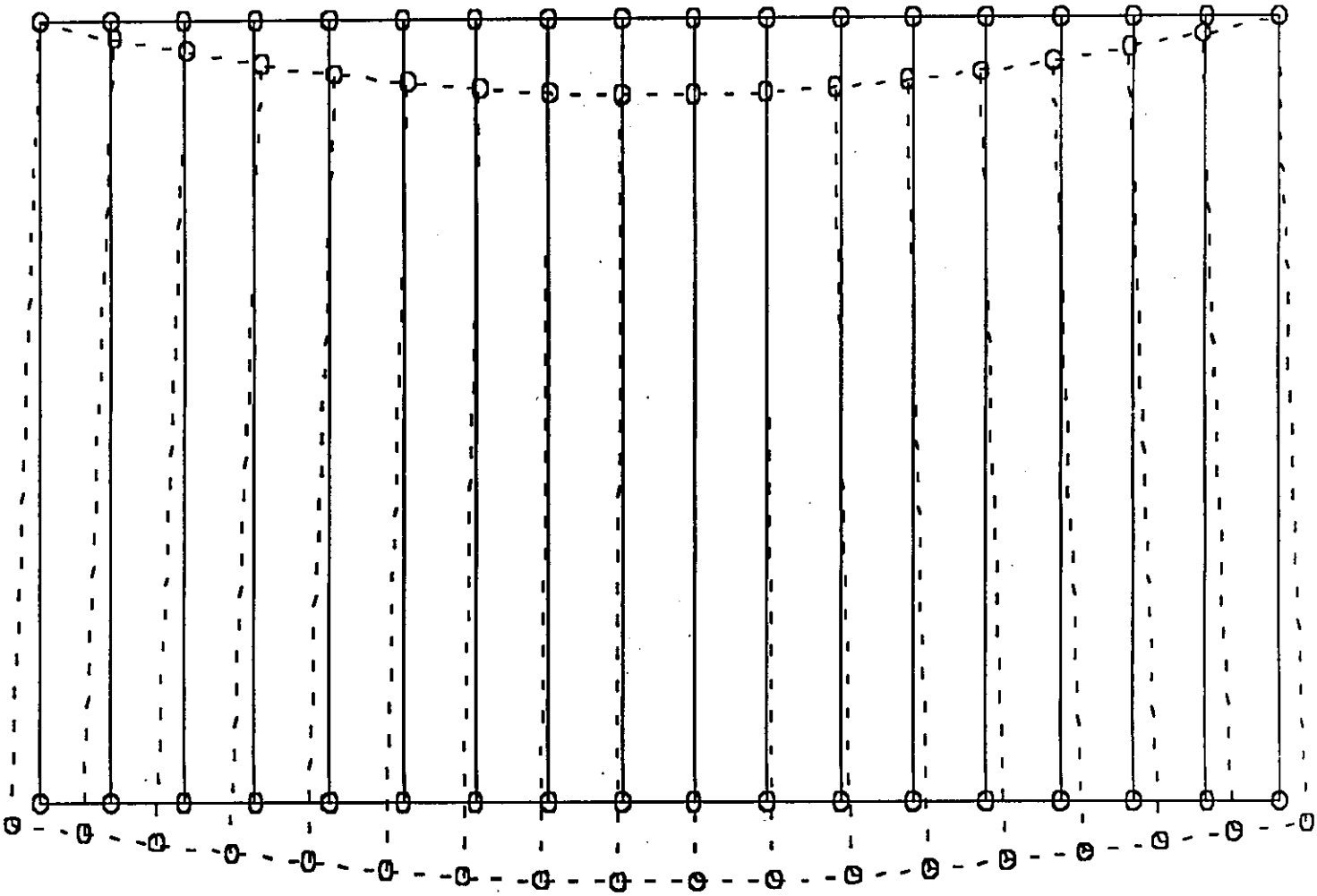

Fig. 4a

Side view of Outer Hadron B
(Proposed double tile
Configuration)

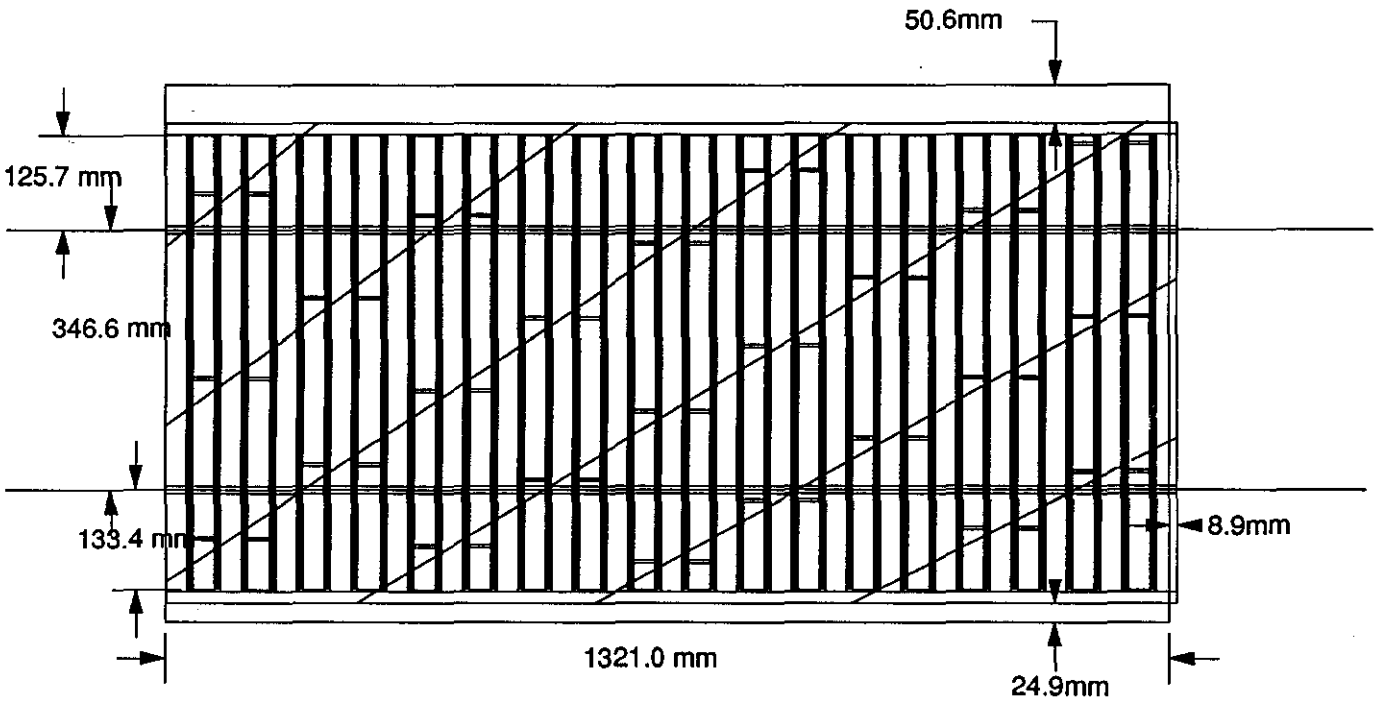

Fig. 4b

Cell Orientation in Modules

Segmentation Eta x Phi

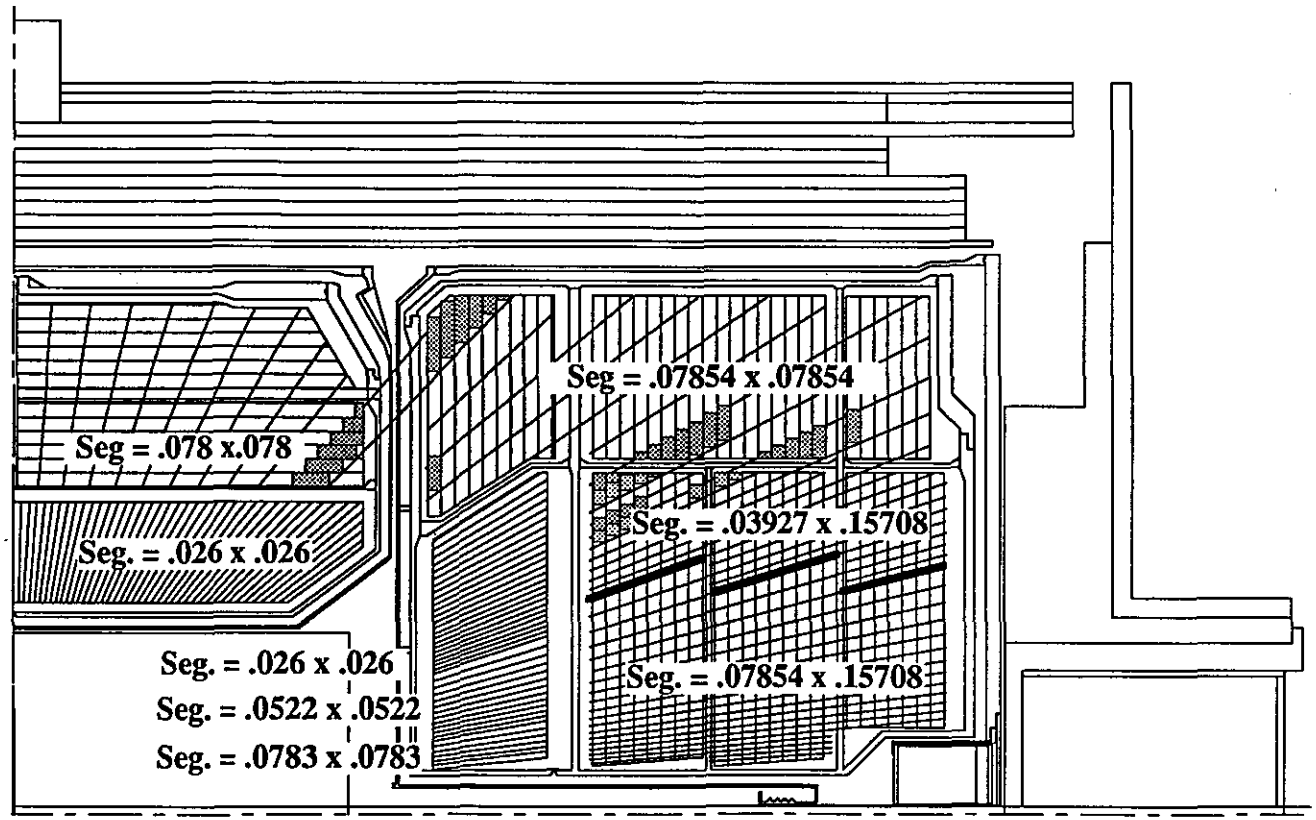

Fig. 5

LLMason tdrbl2 copy 02/17/93

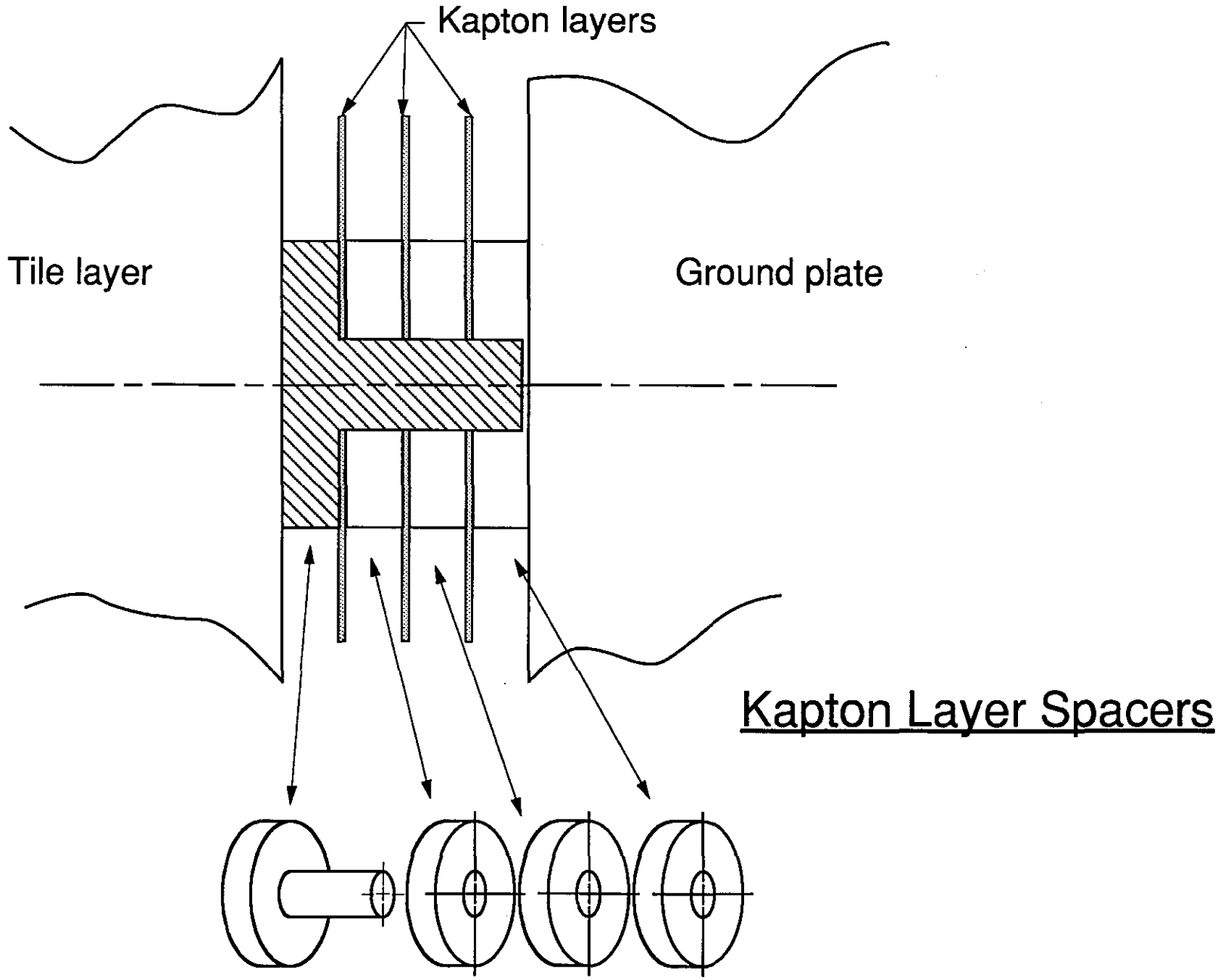

University of Washington
5/6/93 DAF

Fig. 7