GEM TN-93-272

GEM Magnet Subsystem January Subcontractor Information Meeting

January 13, 1993

Abstract:

Presentations of the GEM Magnet Subsystem January Subcontractor Information Meeting held at the SSC Laboratory on January 13, 1993.

Superconducting Super Collider

GEM Magnet Subsystem January Subcontractor Information Meeting

Superconducting Super Collider Laboratory

13 January, 1993

AGENDA FOR PRE-PROPOSAL AND TECHNOLOGY EXCHANGE MEETING
JANUARY 13, 1993 AT THE SSCL

8:30 - 8:45	Introduction	P. Reardon
845 - 9:15	Rationale for conductor design	N. Martovetsky
9:15 - 9:30	Break	
9:30 - 10:30	Specifications, QA/QC, options	R. Camille
10:30 - 11:00	Conductor - winding interface	R. Vieira
11:00 - 11:15	Break	
11:15 - 11:45	R&D on conductor and joints	Z. Piek
11:45 - 12:15	Outline for conductor manufacturing and QA Plan provided with RFP	B. Smith
12:15 - 13:15	Lunch	
13:15 - 13:45	Magnet Engineering Status	G. Deis
13:45 - 14:15	Facilities Interfaces	L. Pedrotti
14:15 - 14:35	RFP SOW issues	A. Tinker
14:35 - 15:00	RFP status and schedule	W. Davis
15:00 - 15:15	Break	
15:15 - 16:15	Responses to written questions	P. Reardon, A. Tinker, B. Smith, W. Davis, G. Deis, L. Pedrotti
16:15 - 17:00	Other questions and discussion	
17:00	Adjourn	

Superconducting Super Collider

Introduction

Paul Reardon,
GEM Magnet Project Manager

SSC Laboratory
13 January, 1993

REMINDER

All technical data presented at this meeting is for information purposes only. Prospective bidders are reminded that all proposals are to be in accordance with RFQ 92-A-09043.

REMINDER

GEM MAGNET RFP PRE-PROPOSAL
AND TECHNICAL EXCHANGE MEETING
JANUARY 13, 1993

Introduction - P. J. Reardon

- Agenda
- RFP Content
- Formal Nature of Discussions
- Written Questions and Responses
- Today's Discussion and Responses
- General Information to be Presented
- Conductor

Superconducting Super Collider

Rationale for Conductor Design

Nicolai Martovetsky
SSC Laboratory

13 January, 1993

OUTLINE

General Requirements

Features and Design Criteria

Conductor Options

Cost considerations

Justification of the main parameters

General Requirements

1	Central field	T	0.8
2	Nominal field in winding	T	1.1
3	Peak field in winding	T	1.6
4	Operating temperature	K	4.5-4.8
5	Maximum hot spot temperature in a quench event	K	100
6	Maximum Dump Voltage to ground	V	500
7	Stored Energy	GJ	2.5
8	Number of charge/discharge cycles		200
9	Charging time	hr	8
10	Maximum number of quenches		100
11	Number of Cycles 293K/4.5K		100

HUGE STORED ENERGY AND LOW DUMPING VOLTAGE = LOW OVERALL CURRENT DENSITY

Design Criteria

HIGH RELIABILITY

high stability

good protection

RELATIVELY SIMPLE OPERATION

VERIFICATION IN LARGE SCALE APPLICATIONS

MODERATE COST

SHORT TERMS OF THE MANUFACTURE

CONVENIENT WINDING

Features:

STEADY STATE OPERATION IN RELATIVELY SMALL MAGNETIC FIELD (Jc is high)

NO INTENTION TO USE BATH COOLING (RISKY)

NO INTENTION TO USE CONDUCTOR AS A PIPING FOR COOLING DOWN AND TAKING MAJOR HEAT LEAKS

20 kA conductor for GEM magnet (indirectly cooled option)

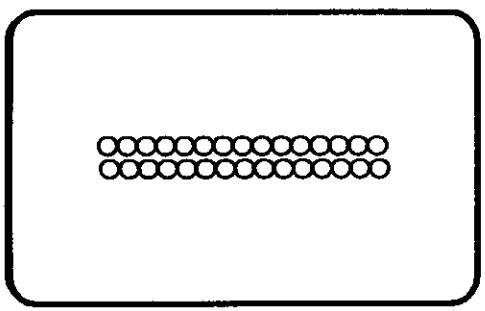

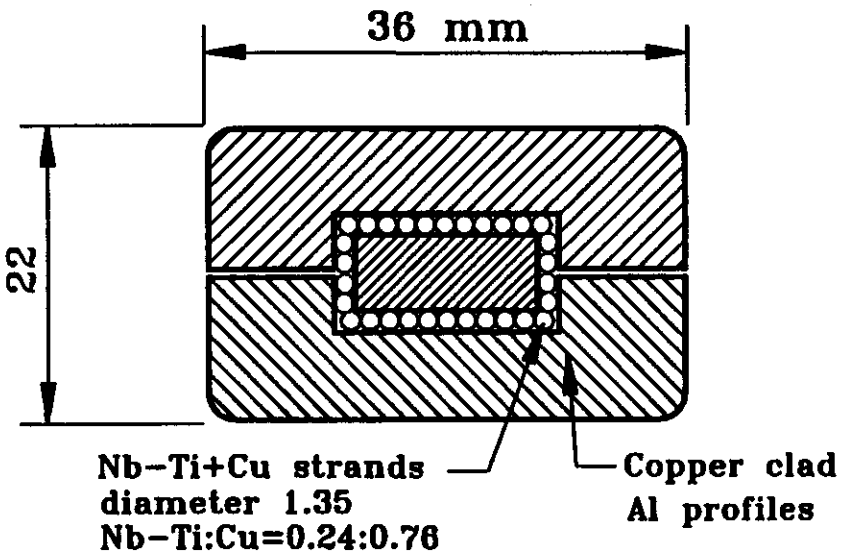

S_{Al} = 705 mm^2
S_{NbTi} = 10.3 mm^2
S_{Cu} = 33 mm^2
S_{PbSn} = 40 mm^2
S_{total} = 789 mm^2

20 kA conductor for GEM magnet
(forced cooled option)

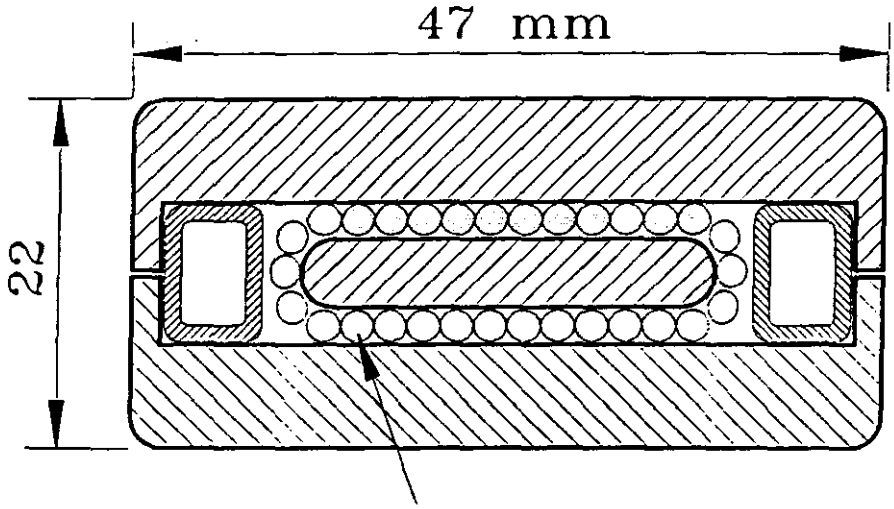

S_{Al} = 800 mm^2
S_{NbTi} = 13.6 mm^2
S_{Cu} = 121 mm^2
S_{He} = 52 mm^2
S_{PbSn} = 68.5 mm^2
S_{total} = 1031 mm^2

30 1.9mm Nb−Ti+Cu strands
Nb−Ti:Cu=0.16:0.84

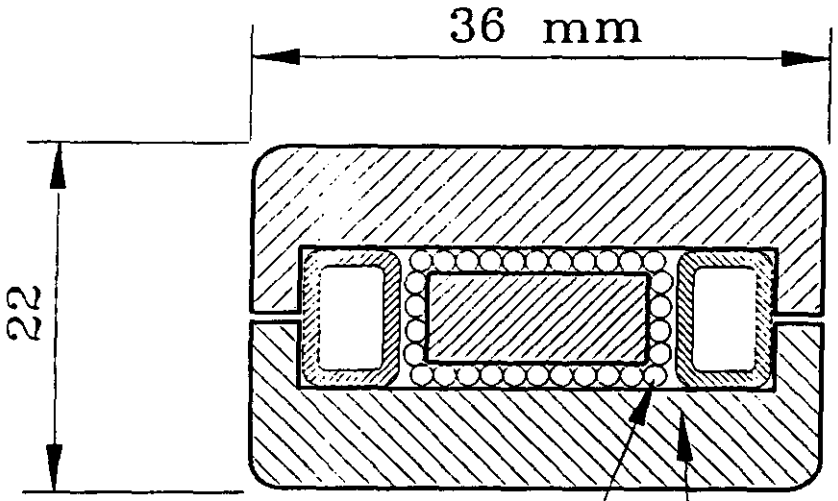

S_{Al} = 600 mm^2
S_{NbTi} = 10.3 mm^2
S_{Cu} = 82.6 mm^2
S_{He} = 52 mm^2
S_{PbSn} = 43.6 mm^2
S_{total} = 789 mm^2

Nb−Ti+Cu strands
diameter 1.35
Nb−Ti:Cu=0.24:0.76

Copper clad
Al profiles

Fig. 3b.

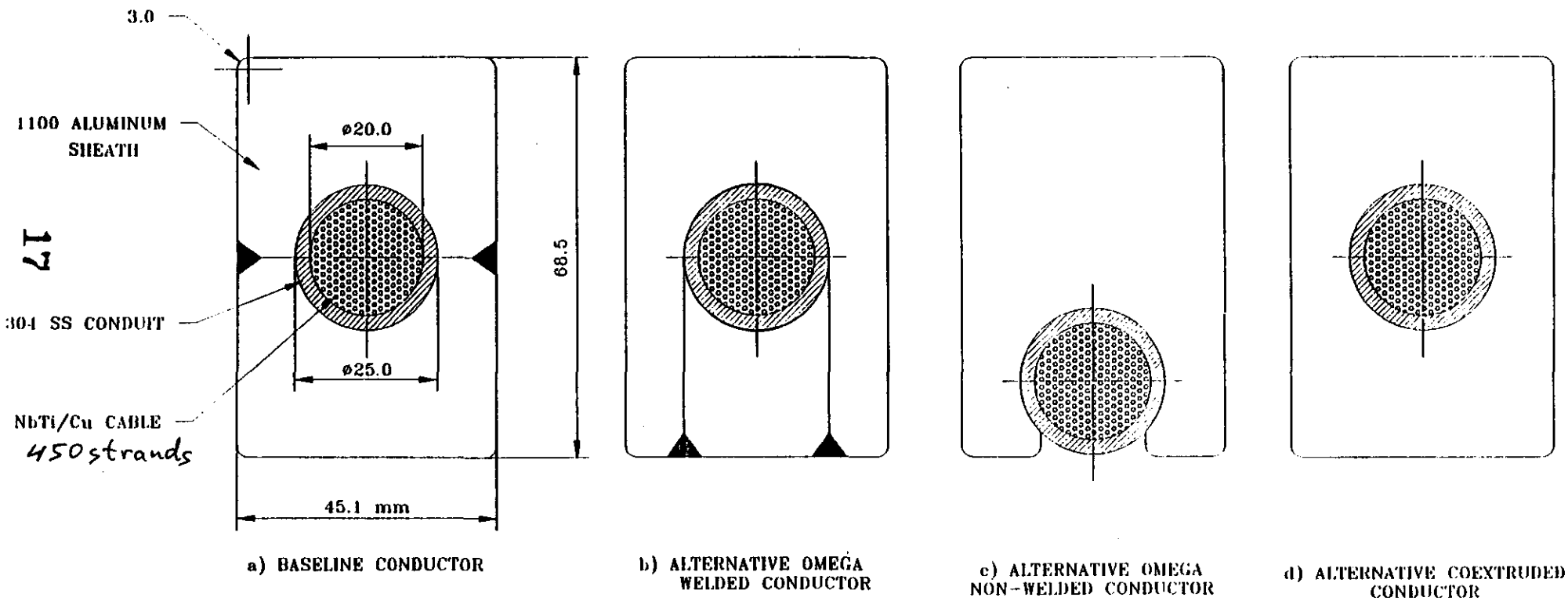

Fig.1. GEM conductor cross section dimensions and possible methods for aluminum sheath attachment

3 PANEL MEETINGS (Dec.91, Jan.92, March 92) WERE HELD DISCUSSING THE TYPE OF THE CONDUCTOR FOR GEM MAGNET:

Conductor Options:

A) INDIRECTLY COOLED CONDUCTOR (ICC)

B) FORCED FLOW COOLED CONDUCTOR (FFC)

C) CABLE-IN-CONDUIT CONDUCTOR (CICC)

Stability Against External Disturbances (20 kA option):

	ICC	FFC	CICC
Energy	7 J/m	50 J/m	300 J/m
Equivalent displacement	0.35 mm	2.5 mm	15 mm

No need for impregnation of the coil for the CICC

ICC vs CICC:

	ICC	CICC
Advantages	Easier to manufacture	Higher stability
	Easier to make joints	Less concern about structural integration of the coil (less QA efforts at the magnet assembly stage ?)
	Less QA efforts at the conductor manufacture stage	

Cost considerations

ICC requires high purity aluminum, CICC does not which makes the cost for both conductor options close

CICC was chosen because:

1) higher stability

2) existent experience in different applications in the US

3) less severe requirements for on-site manufacture and assembly (no bonding required)

Major Characteristics of Cable-in-Conduit Conductors

- ❑ Large local volume of helium
- ❑ Large heat transfer area
- ❑ Excellent transient heat transfer to helium
- ❑ Isolation of superconductor from external perturbation sources by helium buffer
- ❑ Structural steel conduit contains helium and quench pressures
- ❑ Multi-strand, multi-stage cable uses small composite strands and superconducting filaments for flux jump stability and reduced transient losses.

Cable-In-Conduit Conductors are not a new technology

- Conductor development and magnet R&D has been carried out for the U.S. Magnetic Fusion Program since the mid 1970's

- There is a large database of component, conductor and coil performance as well as manufacturing know-how

- Some previous examples of CIC based coils are:

  - ❑ Westinghouse - Large Coil Program (LCP)
  - ❑ MIT - 12 T Coil
  - ❑ U.S.-Demonstration Poloidal Coil (US-DPC)

- The international fusion program has adopted the CICC as the baseline conductor for all coils

  - ❑ United States, Japan, EC and USSR

- The Max Planck Institut fur Plasma Physik (IPP) has begun the production of prototype NbTi CICC co-extruded with an aluminum sheath

- Ansaldo, Genoa has received quotations for a 6 T, NbTi CICC for an MHD magnet

STABILITY OF FORCED COOLED CONDUCTORS
vs COOLING AND JOULE'S HEAT RELEASE

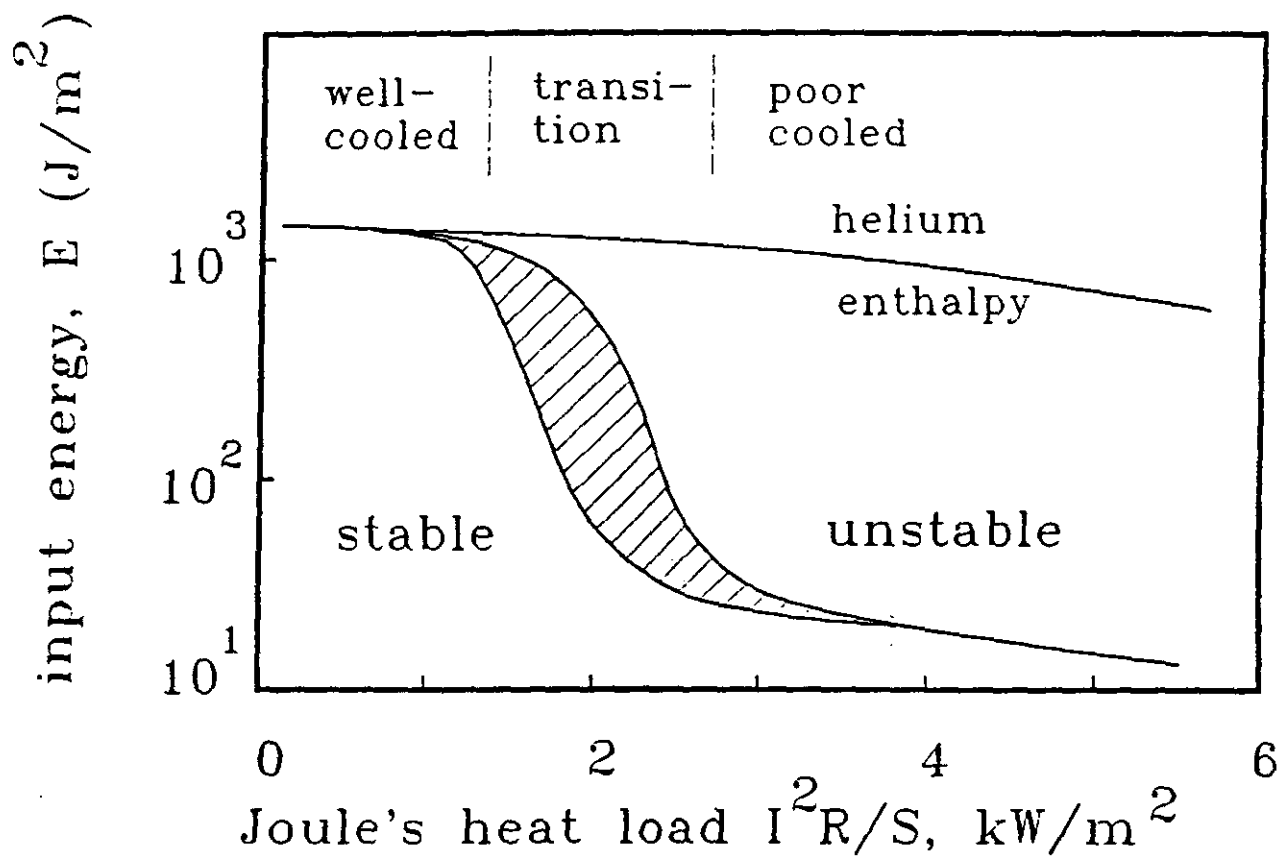

Fig. 5

STABILITY MARGIN

The stability margin is the largest sudden energy deposition to the conductor from which it can still recover the superconducting state.

It is normally expressed as energy per unit volume of cable (mJ/cc)

The limiting current defines the transition between the well-cooled and the ill-cooled stability regimes:

$$I_{lim} = \sqrt{\frac{h\, p\, A_{cu}(T_c - T_b)}{\rho_{cu}}}$$

Where,

h = heat transfer coefficient (W/m^2-K)
p = cooled perimeter (m)
A_{cu} = area of copper stabilizer in cable
ρ_{cu} = copper stabilizer resistivity (Ω-m)
T_c = critical temperature (K)
T_b = initial helium temperature (K)

Justification of the main parameters

Operation Current

Current margin

Diameter of Strands

Number of Strands

Diameter of filaments

Length of the piece

Conduit

Sheath material and Cross section

Operation Current

Considerations calling for high current:

- Protection
- Smaller number of pieces
- Smaller number of turns
- Better mechanical integrity

Considerations calling for lower current:

- Lower cryogenic load due to current leads
- Easier manufacture
- Less expensive current source, distribution and protection equipment
- Easier transportation

50 kA is a reasonable compromise within manufacturing capability

Ic vs B
and load lines for
GEM conductor

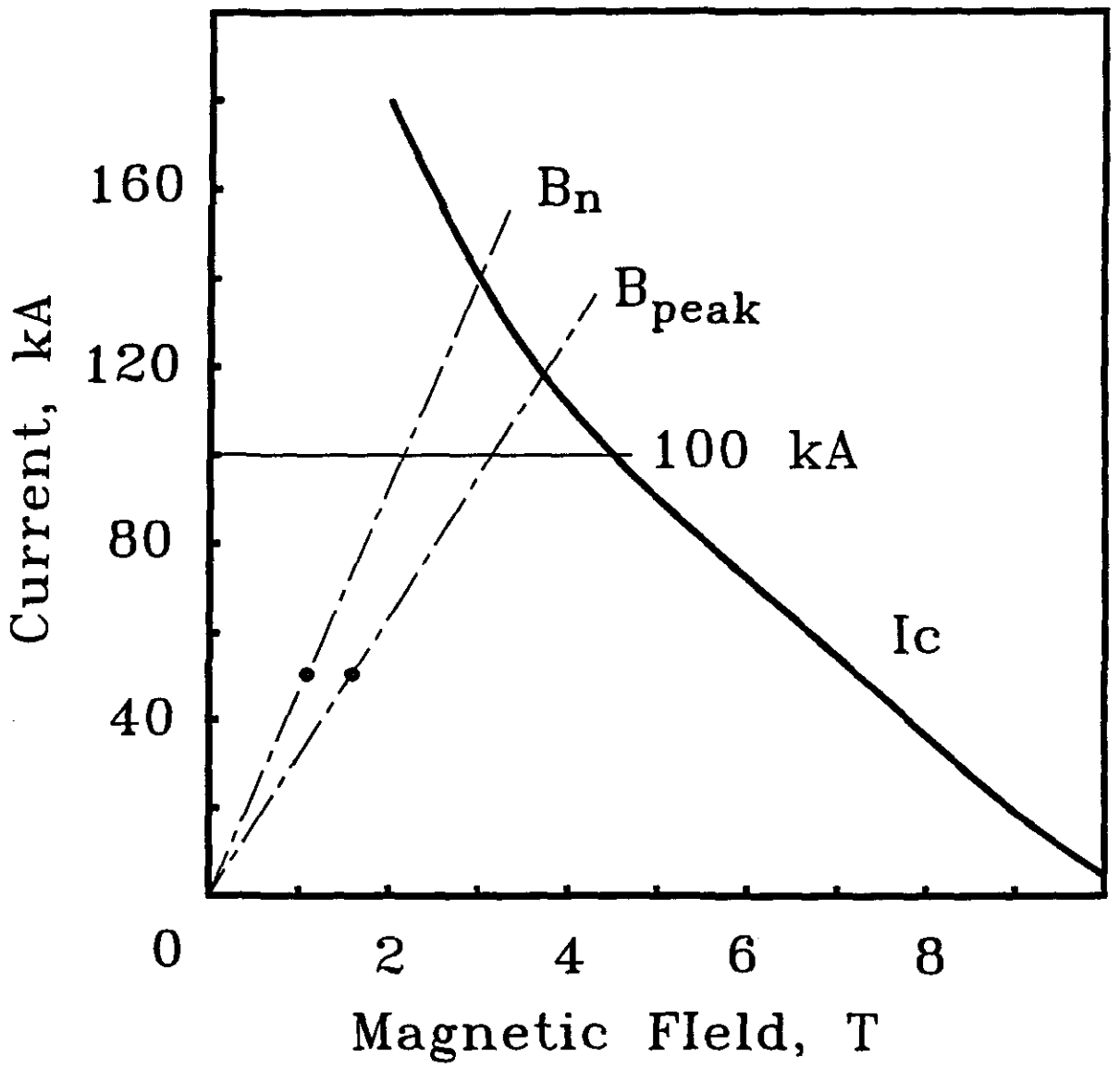

Diameter of Strands	0.73 mm
Copper RRR	> 150
Number of Strands	450
Diameter of filaments	

$$d_f \leq \sqrt{\frac{3C(T_c - T_b)}{\mu j_c^2}} = 30\ \mu$$

CONDUIT

Should take pressure in the event of quench - 34 MPa

LENGTH

Maximum practicable 1139 m

SHEATH

For protection purposes only

Cost considerations - Al 1100 with RRR >17

Superconducting Super Collider

Conductor Specifications, QA/QC, Options

Dick Camille
MIT/Plasma Fusion Center

Superconducting Super Collider Laboratory
13 January, 1993

G.E.M. MAGNET CONDUCTOR

OPTION I

REVISIONS			
LTR	DESCRIPTION	DRN	DATE

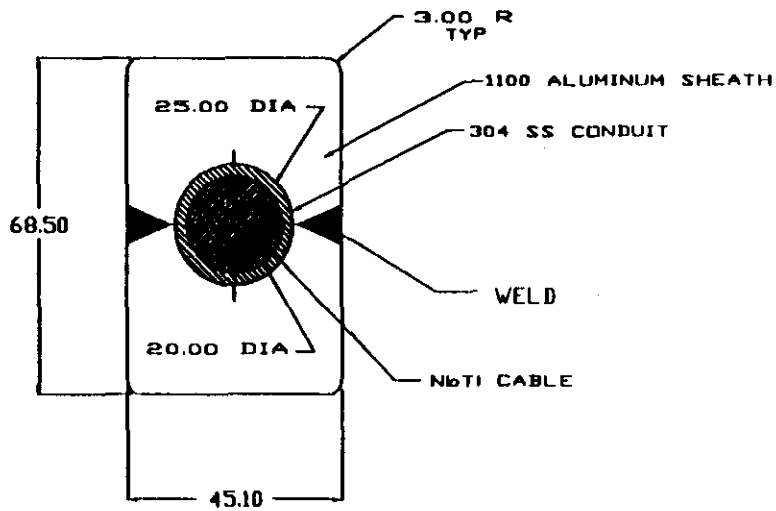

REF	PART NO	NO REQ	DESCRIPTION

MATERIAL 1100 "O"	DIMENSIONS IN mm TOL UNLESS OTHERWISE SPECIFIED
FINISH	2 PLC DEC ± .13 1 PLC DEC ± .3
NEXT ASSY	ANGULAR ± 1/2 DEG
REMOVE ALL BURRS AND SHARP EDGES	CONCENTRICITY .127 TIR MACHINE SURFACES 63 √

PLASMA FUSION CENTER
MASS INSTITUTE OF TECHNOLOGY

MAGNET CONDUCTOR (OPTION I)
ASSY

DRN ALEX R.	10-15-92	SCALE:	SHT OF	
CHK		DWG B SIZE	1-120	REV 0 NO
APPD				

G.E.M. MAGNET CONDUCTOR

OPTION II

REVISIONS			
LTR	DESCRIPTION	DRN	DATE

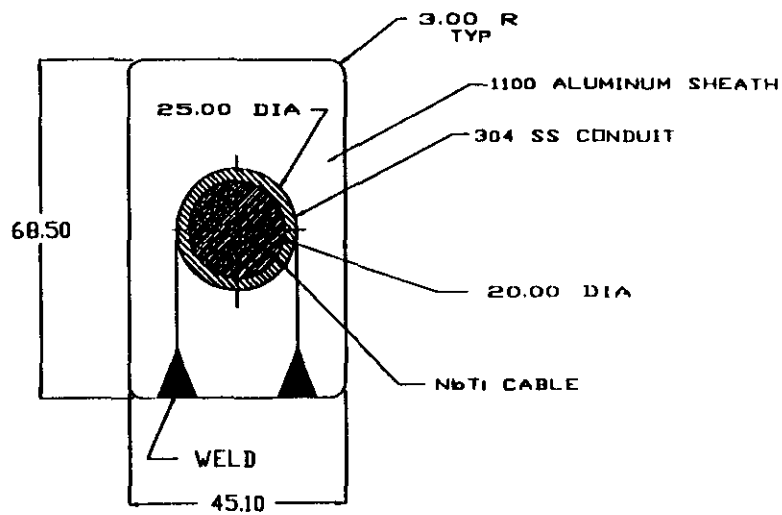

REF	PART NO	NO REQ	DESCRIPTION

MATERIAL 1100 "O"	DIMENSIONS IN mm TOL UNLESS OTHERWISE SPECIFIED
FINISH	2 PLC DEC +/- .13 1 PLC DEG +/- .3
NEXT ASSY	ANGULAR +/- 1/2 DEG
REMOVE ALL BURRS AND SHARP EDGES	CONCENTRICITY .127 TIR MACHINE SURFACES 63 √

PLASMA FUSION CENTER
MASS INSTITUTE OF TECHNOLOGY

MAGNET CONDUCTOR (OPTION II)
ASSY

DRN ALEX R.	10-15-92	SCALE:	SHT OF	
CHK		DWG B SIZE	1-121	REV 0 NO
APPD				

GEM MAGNET CONDUCTOR
OPTION I

REVISIONS			
LTR	DESCRIPTION	DRN	DATE

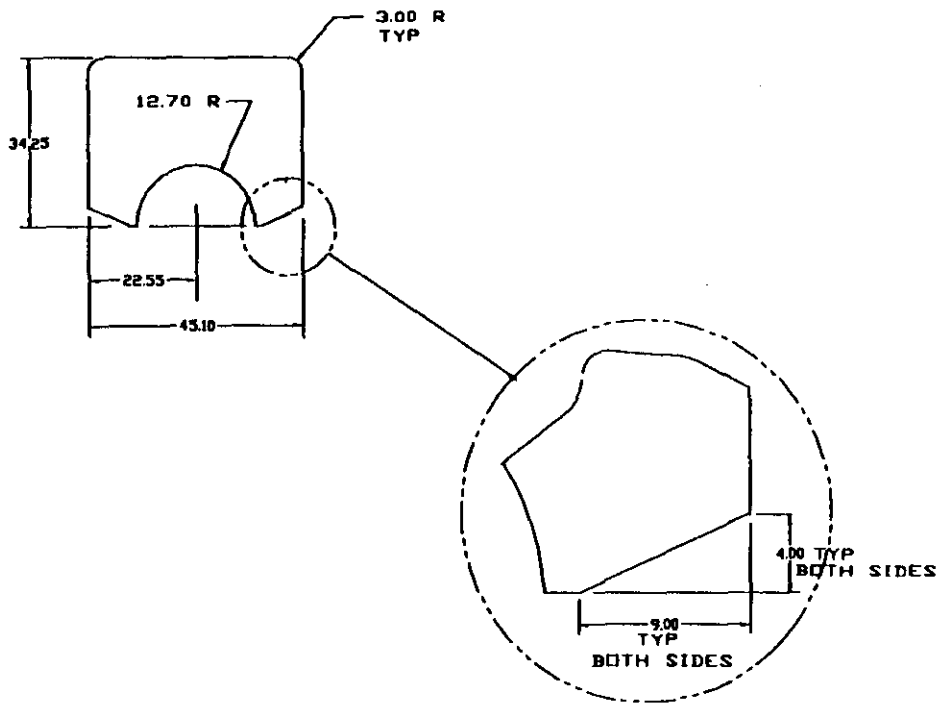

REF	PART NO	NO REQ	DESCRIPTION

MATERIAL 1100 "O"	DIMENSIONS IN mm TOL UNLESS OTHERWISE SPECIFIED
FINISH	2 PLC DEC ± .13 1 PLC DEC ± .3
NEXT ASSY	ANGULAR ± 1/2 DEG
REMOVE ALL BURRS AND SHARP EDGES	CONCENTRICITY .127 TIR MACHINE SURFACES 63

PLASMA FUSION CENTER
MASS INSTITUTE OF TECHNOLOGY

MAGNET CONDUCTOR (OPTION I)

DRN ALEX R.	10-15-92	SCALE:	SHT 1 OF 1	
CHK		DWG B SIZE	1-118	REV 0 NO
APPD				

GEM MAGNET CONDUCTOR
OPTION II

REVISIONS			
LTR	DESCRIPTION	DRN	DATE

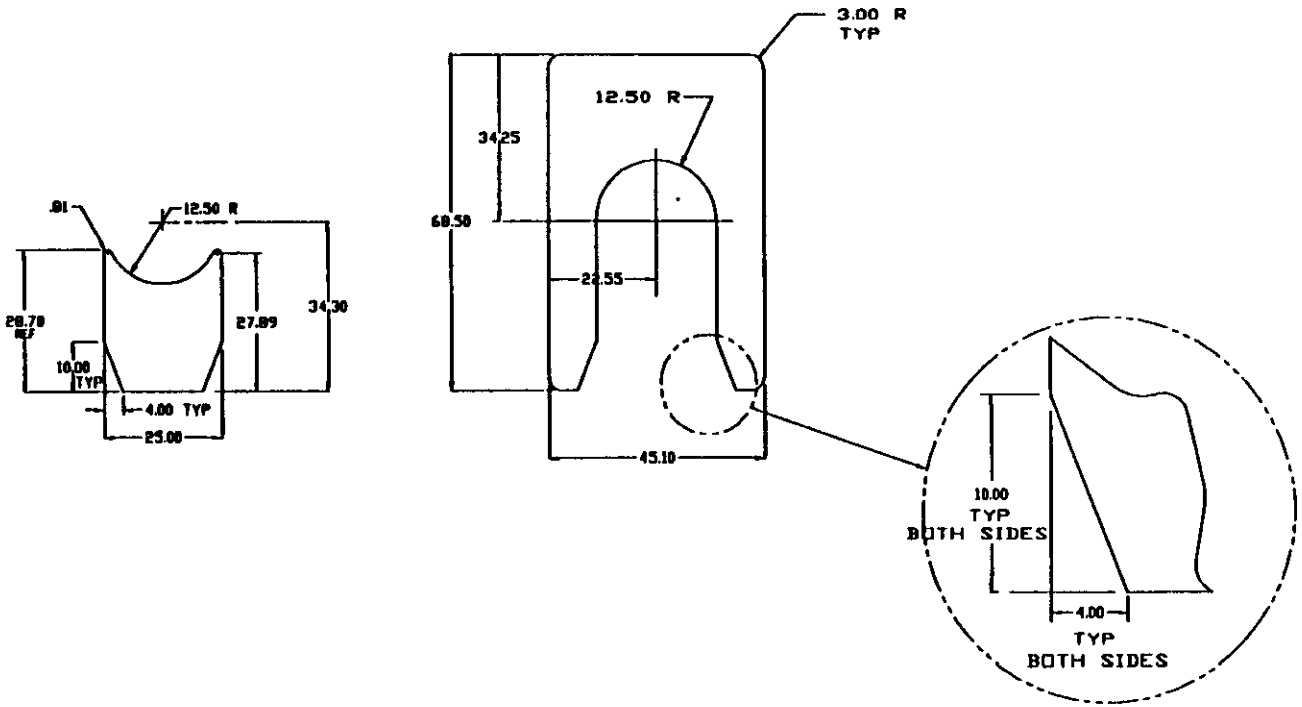

REF	PART NO	NO REQ	DESCRIPTION

MATERIAL 1100 "O"	DIMENSIONS IN mm TOL UNLESS OTHERWISE SPECIFIED	PLASMA FUSION CENTER MASS INSTITUTE OF TECHNOLOGY
FINISH	2 PLC DEC ± .13 1 PLC DEG ± .3	OMEGA WELDED CONDUCTOR (OPTION II)
NEXT ASSY	ANGULAR ± 1/2 DEG	
REMOVE ALL BURRS AND SHARP EDGES	CONCENTRICITY .127 TIR MACHINE SURFACES 63√	DRN CRAIG C. 7-28-92 SCALE: SHT OF CHK APPD DWG B SIZE 1-113 REV O NO

		GEM CONDUCTOR							
RJCJr									
12/30/92								1	24
		Dia. Meters	Cu:SC	Len Meters	Cu WT	NbTi WT	Tot WT Kg/Km	MODULE =	MODULES =
STRAND		0.00073	3.6	1000	2.91717821	0.563207	3.4804	Kgrams	Kgrams
CABLE	450	Strands	X	1.2			1879	2143	51421
		OD Meters	ID Meters	Len Meters					
CONDUIT		0.025	0.02	1000			1378	1571	37712
	ID	Width	Height	Len Meters	COR. RAD				
SHEATH	0.025	0.0451	0.0685	1000	0.003		7021	8004	192093
						Total	10279	11718	281226
					wt = Kg/Meter		10.279		
					Wt= Lbs/Ft.		6.901		
1	MODULE =	1140	METERS =	11718	Kgrams =	25802	Lbs		
24	MODULES =	27360		281226		619259			

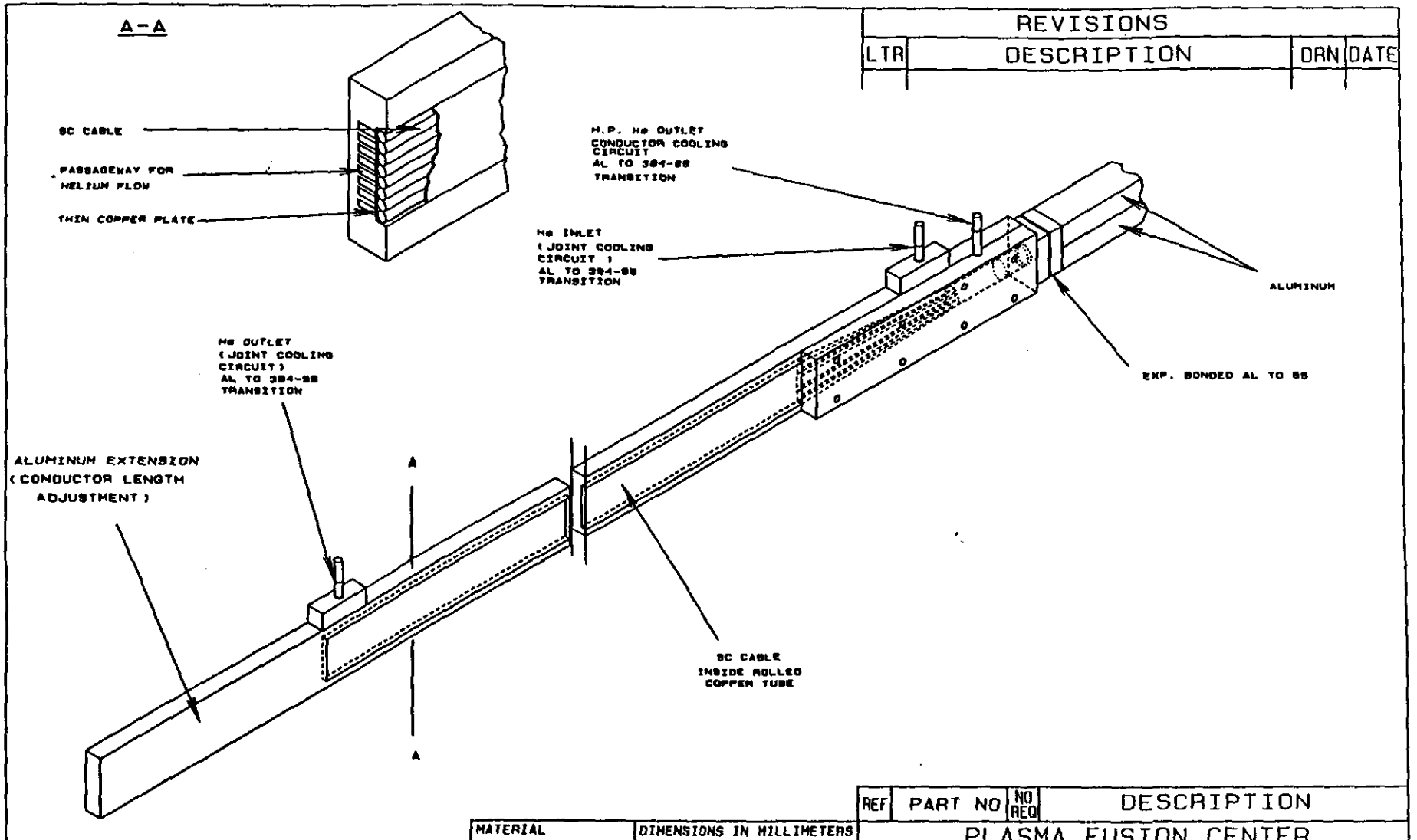

REVISIONS			
LTR	DESCRIPTION	DRN	DATE

REF	PART NO	NO REQ	DESCRIPTION

PRELIMINARY

MATERIAL	DIMENSIONS IN MILLIMETERS TOL UNLESS OTHERWISE SPECIFIED
FINISH	TOLERANCES +/- .20 MACHINE SURFACES 63
NEXT ASSY	
REMOVE ALL BURRS AND SHARP EDGES	

PLASMA FUSION CENTER
MASS INSTITUTE OF TECHNOLOGY

MODULE COIL END ASSEMBLY

DRN		SCALE:	SHT	OF
CHK		DWG SIZE H	NV-0-003	REV 0 NO
APPD				

SPECIFICATION FOR NbTi SUPERCONDUCTING WIRE
Required for 1.2+ kilometers of 450 Strand Cable

1. Total Wire Length ..... 680 Km.

2. Total Est. Wire Weight ..... 2350 Kg

3. Wire Diameter ..... 0.73 +/- 0.0025mm

4. Superconductor ..... NbTi per seller.

5. Cu/SC Ratio ..... 3.6:1 +/- 0.2 by volume.

6. NbTi Filament Size ..... 32 microns Max.

7. Number of Filaments** ..... 130 Min.

8. Minimum Ic @ 2 Tesla & 4.2K ..... 400 Amperes
(To be measured using a voltage criteria of 0.1 microvolts/cm with voltage taps spaced 25 cm apart on a non-inductive loop sample. The test will be repeated at field levels of 3T and 5T., as a minimum, for each sample tested. Testing will be carried out on samples taken from the start and end of each spool length supplied. One copy of the data will be included with the wire shipment and another sent under separate cover to MIT-PFC/SCCL

9. Stabilizer .....Type 101 OFHC Copper (Annealed)

10. Stabilizer Resistivity ..... <=1.724 micro-ohm-cm Max. @ 293K
11. RRR @ 4.2K ..... 150 Min.

12. Twist Pitch ..... 20mm +/- 1.5mm (Right Hand)

13. Sharp Bends .....
The finished conductor shall be capable of withstanding a sharp right angle bend (0.5 mm Max radius) without breaking filaments (detected visually after acid etching away the copper substrate.), or significantly degrading current carrying capacity.

14. Wire Condition .....
The finished conductor shall be clean, degreased, and oilfree. It shall be free of kinks, nicks,scrapes, and general surface defects.

15. Wire Lengths .....
Maximized, consistent with process and good manufacturing practice . We would expect minimum lengths of the order of 5 kilometers.

16. Shipping Reel Size ..... TBD

17. Wire Insulation ..... None.

** NOTE: The specified wire is to be cabled into much larger bundle and then installed in stainless steel conduit. The filament size should therefore be as small as practicable to avoid damage during the cabling process. Vendor experience is therefore solicited to assist in setting this parameter.

Cu:SC	% Copper	% of 3:1	% NbTi	% of 3:1
3.0	75.00%	100.00%	25.00%	100.00%
3.1	75.61%	100.81%	24.39%	97.56%
3.2	76.19%	101.59%	23.81%	95.24%
3.3	76.74%	102.33%	23.26%	93.02%
3.4	77.27%	103.03%	22.73%	90.91%
3.5	77.78%	103.70%	22.22%	88.89%
3.6	78.26%	104.35%	21.74%	86.96%
3.7	78.72%	104.96%	21.28%	85.11%
3.8	79.17%	105.56%	20.83%	83.33%
3.9	79.59%	106.12%	20.41%	81.63%
4.0	80.00%	106.67%	20.00%	80.00%

Summary of Major Requirements for the GEM Conductor

Parameter	Value
Central field (T)	0.8
Nominal field in winding (T)	1.1
Peak field in winding (T)	1.6
Operating temperature (K)	4.5
Operating current (kA)	52.5
Length of the conductor piece (m)	1134
Number of conductor pieces	24
Maximum hot spot temperature in a quench event (K)	100
Maximum pressure developed in a quench event (Bar)	400
Maximum dump voltage to ground (V)	500
Number of charge/discharge cycles	200
Charging time (hr)	8
Maximum number of quenches	100
Number of cycles 293 K/4.5 K	100

3.3.1 Cable Definition

3.3.1.1 Configuration: The cable is a fully transposed 6x5x5x3 array. It is made up of 450 0.73 mm diameter strands of NbTi superconducting wire, with each strand having a minimum copper to superconductor area ratio of 3:1. The wire must be as specified in Technical Specification No. _____-01.

The cable is built in four steps:

Step 1. Three NbTi/Cu wire strands are twisted together to form a triplet.

Step 2. Five triplets are twisted together to form a 5x3 subcable.

Step 3. Five 5x3 subcables are twisted to form a 5x5x3 subcable.

Step 4. Six 5x5x3 subcables are twisted to form a 6x5x5x3 cable.

3.3.1.2 Diameter: For the various stages of the cable, the following diameters shall apply:

First Stage (Step 1.)	1.60 mm
Second Stage (Step 2.)	3.60 mm
Third Stage (Step 3.)	8.05 mm
Fourth Stage (Step 4.)	20.00 mm, +0.30/-0.00 mm

Note that cable diameter listed above for fourth stage is for the cable prior to applying the stainless steel overwrap described in Section 3.3.2.8.

Table 1 -- Properties and Test and Inspection Requirements for the GEM Detector Magnet Cable

Test	Test Specimen or Sample	Value	Examination or Test Frequency	Test Method
Subunit Cabled Strand Critical Current (Min), at 2T 4.2 K	Cable Strands	400 A	Ten, 1 m Long Samples from Each End of Each Finished Cable	See Section 2.0, Appendix A
Cu/NbTi wire RRR at 4.2 K	Cable Strands	≥150	Ten, 1 m Long Samples from Each End of Each Finished Cable	See Section 2.0, Appendix B
Cable Twist Pitches, per Stage	Cable and Subunits	1. 50 mm 2. 100 mm 3. 200 mm 4. 400 mm	1 m Long Sample For Each Subunit from Each End of Each Finished Cable	
Wire Integrity	During Cabling	No Broken Cu/NbTi Strands.	100%	Visual and/or Mechanical

4.2.3 Exceptions and Deviations

The vendor shall provide a written request to the SSCL Subcontract Administrator of any exceptions or deviations to the Technical Requirements of this specification (and its applicable documents) with the vendor's proposal. Such exceptions and deviations shall not be allowed unless the vendor has received written authorization from the SSCL Subcontract Administrator to proceed.

4.3.0 REQUIREMENTS

4.3.1 Cable-in-Conduit Conductor Fabrication

4.3.1.1 Overview: To date, at least two different methods have been used for manufacturing CIC Conductor. Both methods start by cabling superconducting strand, and then encase the cable in stainless steel conduit. The encasing methods differ for the two approaches.

The first manufacturing method consists of feeding flat stainless steel strip along with the superconducting cable through a five-stage tube mill machine. At the tube mill, the stainless steel strip is formed around the cable, so that when cable exits the tube mill it is enclosed by the stainless steel strip, save for a continuous open seam along the length of the cable where the two edges of the stainless steel strip now meet. Subsequently, the seam is sealed by a continuous TIG welding operation that occurs downstream of the tube mill operation. The tube is then overdrawn to final size.

In the second approach, the required length of cable is pulled through an oversized seamless (i.e., extruded) conduit of comparable length. The Cable-in-Conduit is then run through a reduction stage (i.e., die or turk's head) to get to the desired final conductor dimensions.

4.3.1.2 Fabrication Approaches: All approaches for fabricating the CIC conductor will be considered. When proposing an approach, the supplier must submit a test plan that will demonstrate that no thermal, mechanical or electrical damage is caused to the cabled conductor during fabrication via the proposed process. Additionally, the supplier will submit sufficient backup calculations, test data, evidence of fabrication experience, and fabricated samples, if available, that demonstrate that the final product will meet or exceed the specification values for the intended use. Exceptions will be presented with the proposal.

4.3.2 Conduit Definition

4.3.2.1 Material: The conduit material will be Type 304L Stainless Steel in a solution annealed and quenched state. (A vacuum cast base material is preferred).

4.3.2.2 Dimensions: The inner diameter of the stainless steel conduit *after* encasing the NbTi superconducting cable in conduit shall be 20.00 mm, $\pm$ 0.13 mm. The final outer diameter of the conduit shall be 25.13 mm. +0.00/-0.13 mm. The stainless steel conduit will be 1150 meters

long, +10/-0 meter, per conductor (of equal length). This conduit length is a reference length and will be set during the final design phase of this program. Vendor shall supply 24 unit lengths of fabricated conduit.

4.3.3 Technical Requirements

4.3.3.1 Material Identification: Positive identification of each cable and the tracking of all cables through the encasing process and subsequent testing is required.

4.3.3.2 Cleanliness: Wire, cable and cable-in-conduit conductor shall be kept as clean as possible at all times. All lubricants, cleaners, and other solutions shall be selected on the basis that they are easily removed from the completed cable-in-conduit conductor and/or that they evaporate and leave no residue.

4.3.3.3 Measurement of Conduit Length: Supplier shall propose a means of measuring the length of finished conduit (1150 m $\pm$ 10 m). Measured length shall be referenced to 20 C, and must be corrected for ambient temperature if the ambient is other than 20 C (vendor shall record ambient temperature and submit calculations for adjustment to 20 C). Proof of accuracy of proposed method is required and can be in the form of documented examples of successful past applications of the proposed method or as data from actual tests of the proposed system at the supplier's facility.

4.3.3.4 Butt Welds: The supplier is allowed to propose an alternate fabrication approach to the tube milling process described in section 4.3.1.3. In making the cable-in-conduit conductor, continuous seamless conduit is desirable but may not be practical given the length of each conduit (approximately 1170 m). The supplier may find it necessary to butt weld shorter lengths of conduit together in order to get the desired final length of conduit for the Cable-in-Conduit conductor. If considering this approach, the supplier must describe in detail tube alignment, butt welding, finishing, cleaning, and inspection techniques intended that will ensure a continuous smooth finish on both inside and outside surfaces of the conduit. Alignment of adjacent sections of conduit must be within 0.13 mm.

4.3.3.5 Seam Welding Conduit: Once initiated, all welding operations will be continuous and uninterrupted over the entire length of conduit, approximately 1170 m (see Section 4.4.2.2). All welds shall comply with requirements discussed in Specification No. _____-08 on Quality Assurance and Acceptance Testing requirements. All weld operators and operations shall be certified and inspected under the ASME Boiler Code.

4.3.4 Technical Properties

4.3.4.1 Wire Integrity: The critical current carrying ability of the cable-in-conduit conductor will be at least as high as the value specified in Technical Specification No. _____-03 for the cable by itself. This will be verified by testing a random sample of wire strands selected from 1 meter long sections cut from each end of each finished cable/conduit length. The tests will be conducted in accordance with Appendix A (Critical Current). A visual inspection of the cable

will be made to in accordance with Section 4.4.2 of this specification.

4.3.4.2 Residual Resistivity Ratio (RRR): The RRR ($R_{295\ K}/R_{10\ K}$ in the absence of a magnetic field) for wires taken from the jacketed cable shall be greater than 150 for the superconducting strands.

4.3.5 Disposition of Equipment

All manufacturing equipment, tools, instrumentation, electronics, and other items invoiced by the vendor to this project is considered property of the US Government. Upon completion the vendor's portion of the work described in this specification, the vendor shall contact SSCL for instructions as to the final disposition of the aforementioned equipment.

4.4.0 QUALITY ASSURANCE PROVISIONS

4.4.1 Process Controls

4.4.1.1 Manufacturing Plan: The supplier shall submit a detailed manufacturing plan which will describe the supplier's step by step approach for making Cable-in-Conduit conductor.

The manufacturing plan is to address all aspects of manufacture including description of equipment to be used, description of any modifications required to existing equipment, discussion of intended methods, production line layout and machinery configuration, means of process measurement and control, and all other related issues. The manufacturing plan shall also contain production and delivery schedules. After production has started, any changes to the approved manufacturing plan must be approved by the SSCL contract administrator. No changes shall be implemented without written authorization from the SSCL.

4.4.1.2 Quality Assurance Plan: The supplier shall prepare a separate quality assurance plan that will describe in detail how the supplier will carry out all test and inspection requirements described in the Section 4.4.2, (unless it is explicitly specified how a test or procedure is to be carried out in this specification) as well as ensure that the conductor meets all quality and performance standards describe in this specification. The plan shall include detailed descriptions of all tests to be conducted, equipment and procedures used in each test, personnel qualification procedures, identify key personnel who are to conduct these tests and describe their experience with such procedures, and describe how the supplier will be in compliance with all federal environmental, safety and health statutes that apply to such testing.

4.4.1.3 Nonconforming Materials: All incoming SSCL-provided materials (if applicable) are to be visually inspected by the vendor. Any material that is damaged or that appears to be unusable shall be identified and segregated from conforming material. Such material shall remain out of use until SSCL has been notified (see Section 8.4.3.2) and has made a written recommendation on disposition of the nonconforming material.

5.2.3 Exceptions and Deviations

The vendor shall provide a written request to the SSCL Subcontract Administrator of any exceptions or deviations to the Technical Requirements of this specification (and its applicable documents) with the vendor's proposal. Such exceptions and deviations shall not be allowed unless the vendor has received written authorization from the SSCL Subcontract Administrator to proceed.

5.3.0 REQUIREMENTS

5.3.1 Continuous Extrusion of Aluminum sheath

5.3.1.1 Material: Aluminum, 1100 series, "0" temper, $R_{295K}/R_{10K} \geq 17$, extruded to produce the final shape per Drawing Nos. 1-119, 1-120 or 1-121. Final shape will be selected by SSCL prior to the fabrication phase of this work.

5.3.1.2 Dimensions: Cross Sectional Dimensions of the assembled sheath shall be in accordance with those given in Dwg. No. 1-121, (Magnet Conductor (Option II) Assembly). Length of the sheath must correspond to that of the conduit, which shall be 1150 meters, +10/-0 meters. (See Section 4.3.2.2 of the conduit specification).

5.3.1.3 Fabrication Overview: To date, three different methods have been identified for manufacturing continuous aluminum extrusions. In one method the aluminum sheath is **co-extruded** around the pre-assembled CIC conductor, to produce the final GEM conductor configuration.

The other two methods first extrude the aluminum sheath, either by **tandem extrusion** (also known as **die-stop**) or by **conform extrusion**. In both cases the sheath must then be assembled and welded over the pre-assembled CIC conductor.

5.3.1.4 Fabrication Approach: Vendor shall propose a detailed manufacturing and test plan to produce, inspect, package and ship the aluminum sheath in the single lengths required without welding. The vendor shall address the problem of cross-sectional deformation expected during the process of winding the extruded lengths onto their shipping reels and propose plans to compensate for this effect. When proposing the co-extrusion approach, the vendor must submit a test plan that includes the fabrication of a pre-production conductor of sufficient length to demonstrate that no thermal, mechanical or electrical damage is caused to the sheath and/or the cable-in-conduit.

5.3.2 Technical Requirements

5.3.2.1 Material Identification: Positive identification of each length of sheath and tracking of all sheath lengths through the extrusion and subsequent testing processes is required. Copies of all test data are to be included with each shipment with an additional copy sent under separate

cover to the contract officer.

5.3.2.2 Cleanliness: The sheath shall be kept as clean as possible at all times. All lubricants, cleaners, and other solutions shall be removed from the completed sheath.

5.3.2.3 Measurement of Sheath Length: Vendor shall propose means of measuring the full length of the sheath (1150 meters, +10/-0 meters, at 20^0 C). Proof of accuracy of proposed method is required and can be in the form of documented examples of successful past applications of the proposed method or as data from actual tests of the proposed system at the vendor's facility.

5.3.2.4 Surface Finish: The vendor shall provide an extruded product (sheath) with a maximum surface finish of 60 rms and be free of scratches, dents, cracks, blisters, voids, and stains.

5.3.2.5 Key-stoning: Vendor shall layer wind sheath onto a transportation spool, sized to minimize distortion of the finished cross-section due to key-stoning. Key-stoning on wound sheath at time of finish shipment shall not exceed tolerance variations.

5.3.3 Technical Properties

5.3.3.1 Resistivity: The sheath shall have a maximum resistivity (ρ_{293K}) of 3.1×10^{-8} ohm/m after forming onto its shipping reel.

5.3.3.2 Sheath Residual Resistivity Ratio (RRR): The RRR for the aluminum sheath, equal to $R_{293K}/R_{4.2K}$, shall be greater than 17 after forming onto its shipping reel. Samples from each end of each piece length will be tested and verified by SSCL prior to shipment. Extruded material which does not comply with the minimum RRR value is cause for rejection.

5.3.3.3 Mechanical Properties: A coupon from the each extrusion run shall be tested in accordance to ASTM B557-90. Extruded material which does not comply with minimum mechanical properties called for by ASTM B221 is cause for rejection.

5.4.0 QUALITY ASSURANCE PROVISIONS

5.4.1 Process Controls

5.4.1.1 Manufacturing Plan: Vendor shall submit a detailed manufacturing plan which will describe the a step by step approach for making continuous aluminum extrusion (sheath). The manufacturing plan should, as a minimum, address the following: description of equipment to be used; production line equipment layout and configuration; production and delivery schedules; shipping preparation (including shipping reel size and construction and layer winding onto the shipping reel); a description of the designated operators' past experience with this or related production lines; description of how quality assurance procedures (see section 5.4.1.2) will be integrated within the manufacturing process; and such other relevant considerations that

Superconducting Super Collider

Conductor-Winding Interface

Rui Vieira
MIT/Plasma Fusion Center

13 January, 1993

"Conductor - Winding Interface"

Winding Program

Phase I Bending Experiments

Phase II Two Turn Winding

Phase III Prototype Winding

Phase I status

1) Purchase roll-bending machine. (made improvements)

2) Welding setup capable of MIG welding 20 foot long conductor pieces one side at the time.

3) No Weld failures of both conductor types at bend radii down to 72 inches and down to 22 inches for the two halves type.

4) No evidence of relative movement between the conduit and the sheath due to roll-forming at bend radii down to 72 inches.

5) Keystone measurements: Data based on one pass bend.

   a) straight to 6 ft radius (average) = 0.026 inches
   b) 6 ft to 31 ft radius (average) = 0.010 inches

   The keystone will be controlled by a counter keystone of the aluminum sheath along with a turk's head.

6) Power required to roll-form the conductor from straight to a 6 ft radius is 3 KW (4 hp).

7) Radius versus roll position plot.

8) Roll-forming an insulated conductor proved possible, but further work is needed.

9) Preliminary weld heat load data on conduit for the two halves aluminum sheath proved not to be a problem. Further tests with latest sheath dimensions on going.

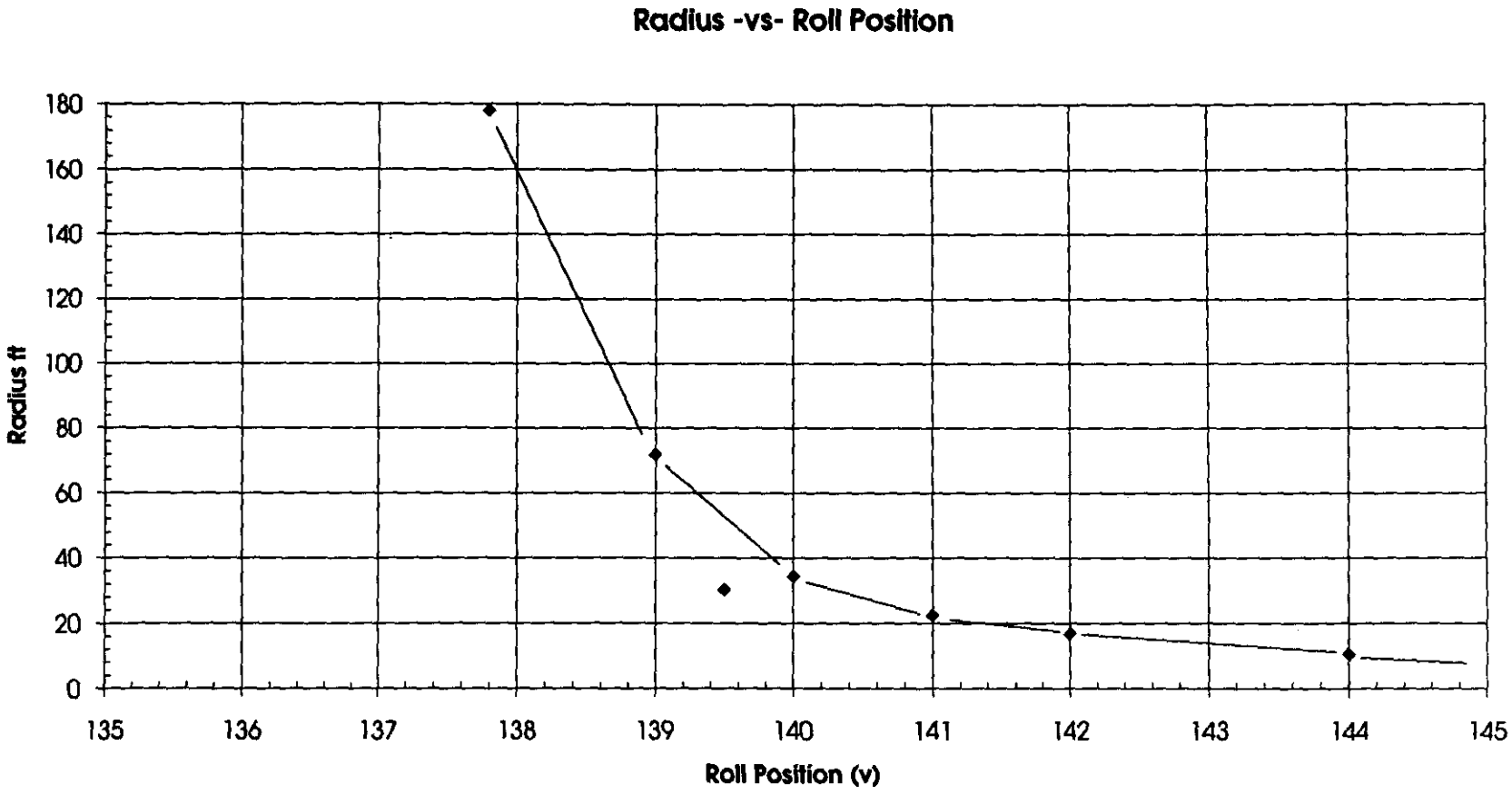
Radius -vs- Roll Position
Radius ft
180
160
140
120
100
80
60
40
20
0
135
136
137
138
139
140
141
142
143
144
145
Roll Position (v)

Phase II Program

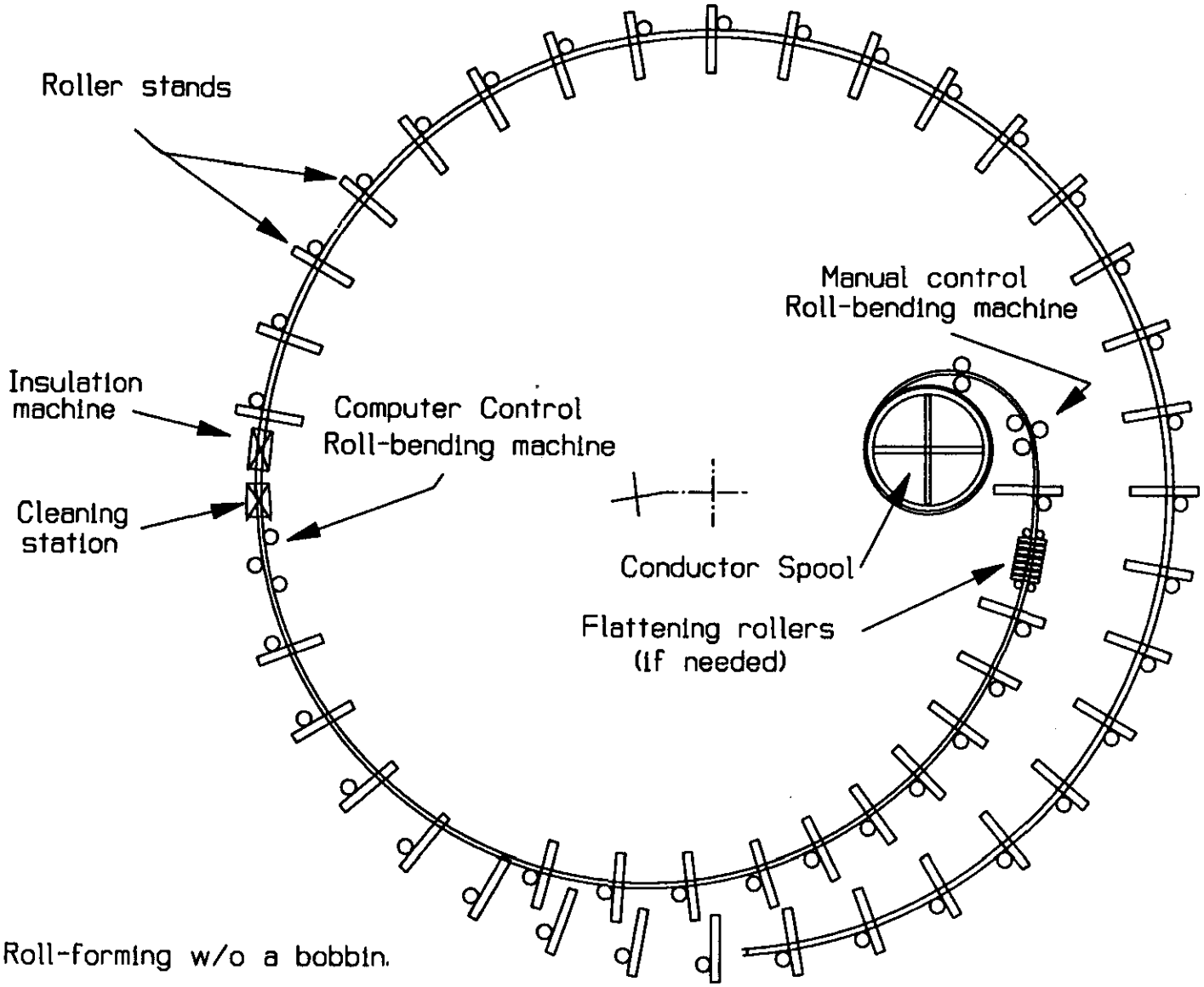

NOTE: Roll-forming w/o a bobbin.

Butt Weld Configuration

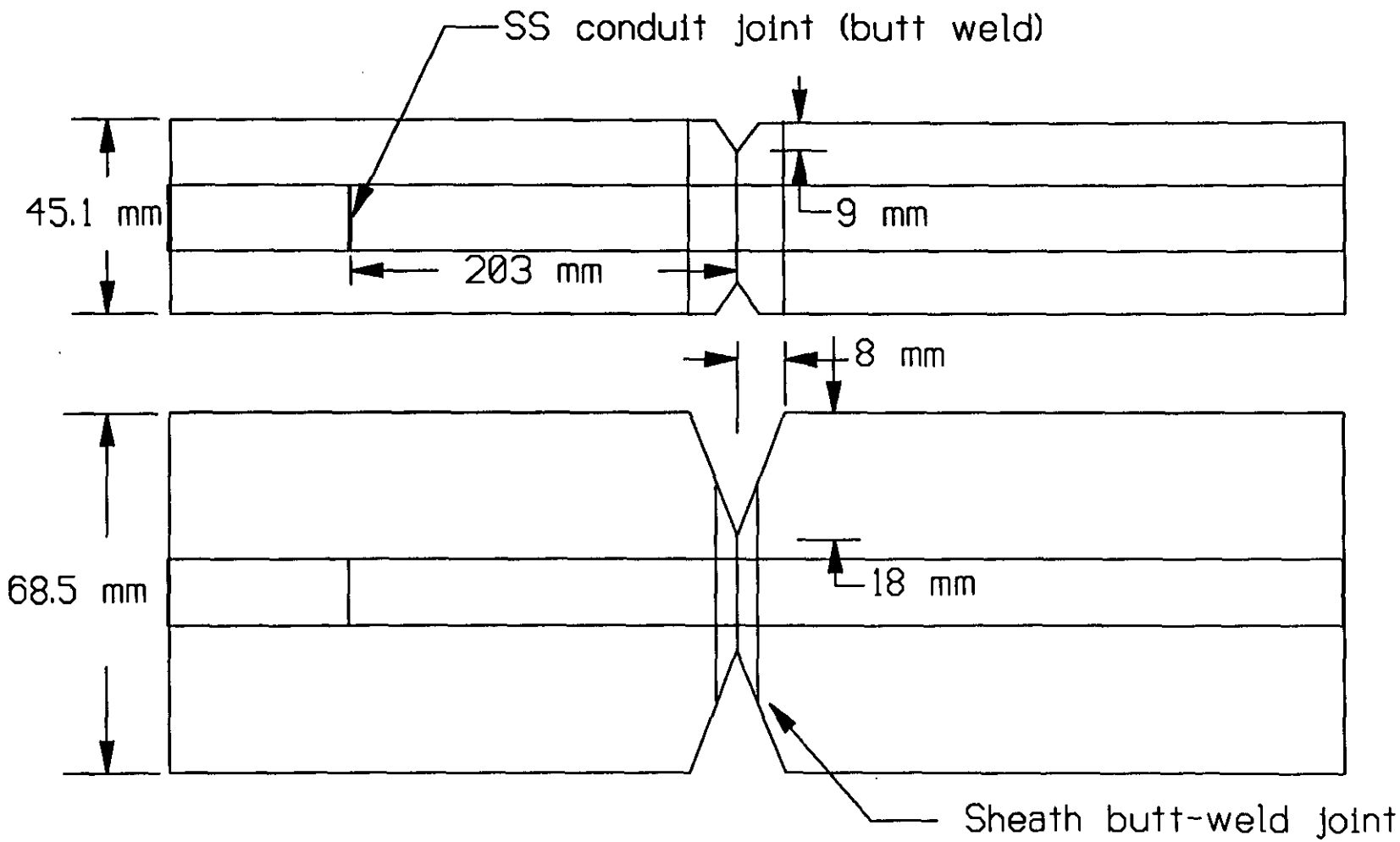

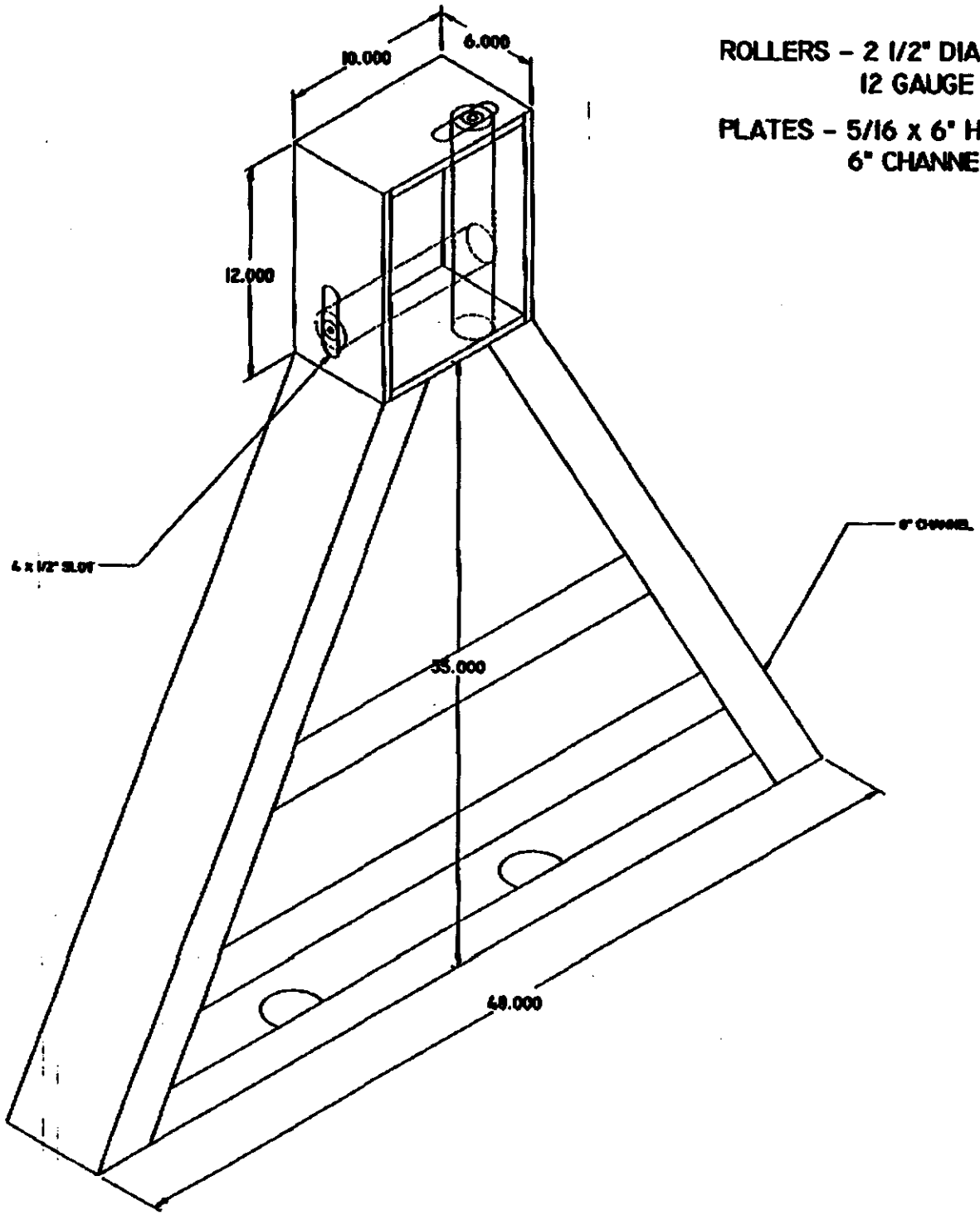

ROLLERS - 2 1/2" DIA. x 9" LONG
12 GAUGE MATERIAL STEEL

PLATES - 5/16 x 6" HRS
6" CHANNEL IRON

a) Conductor Flatness

b) Conductor Twist

c) Quality of final radius (concentricity).

d) Damage to aluminum sheath (welds).

e) conductor flexibility (stiffness).

f) Average keystone of final radius.

g) Check for conductor stretching.

h) Insulation wrapping process.

i) Conductor radius variation/fitup with roller stands.

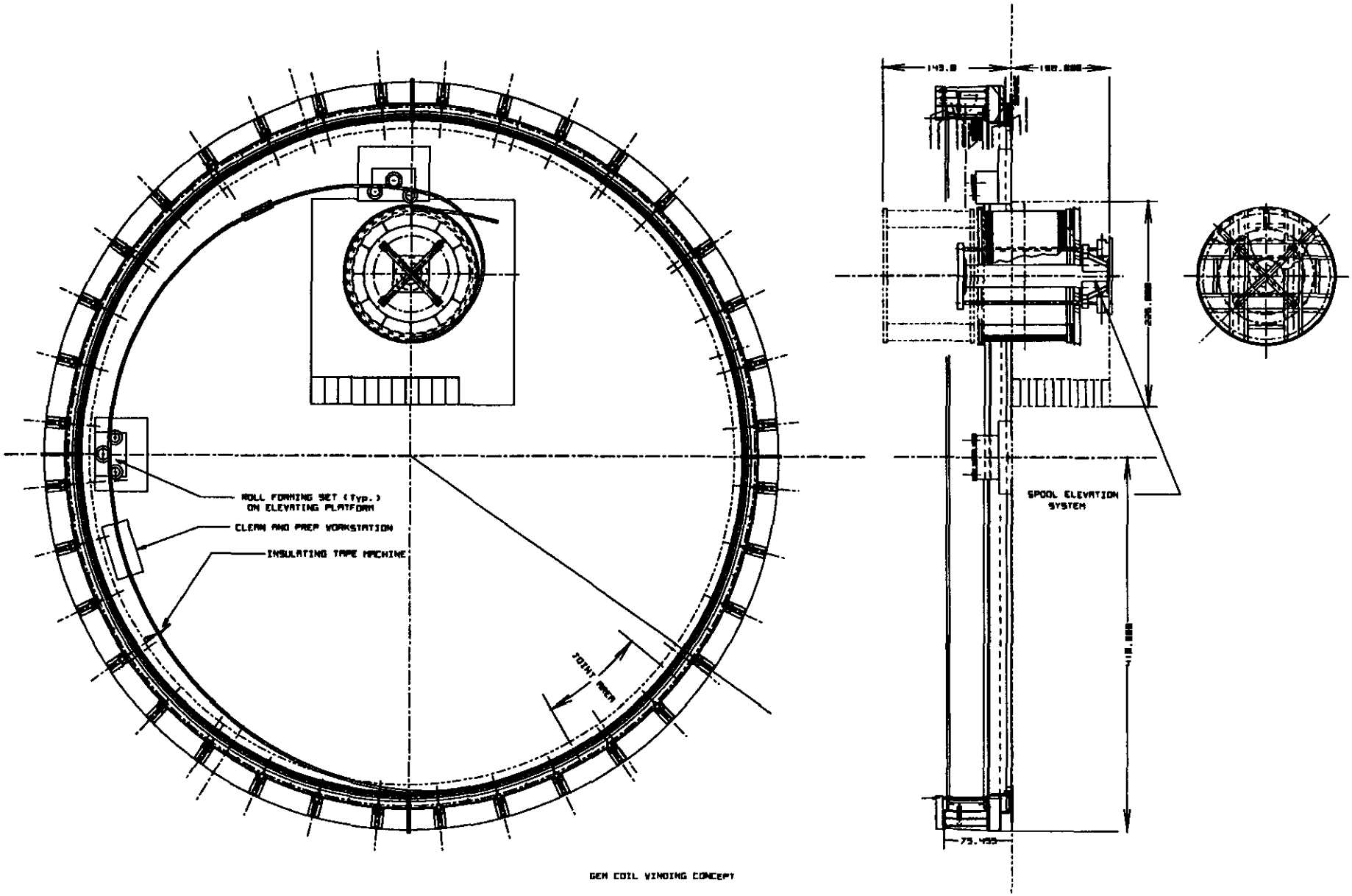

GEM COIL WINDING CONCEPT

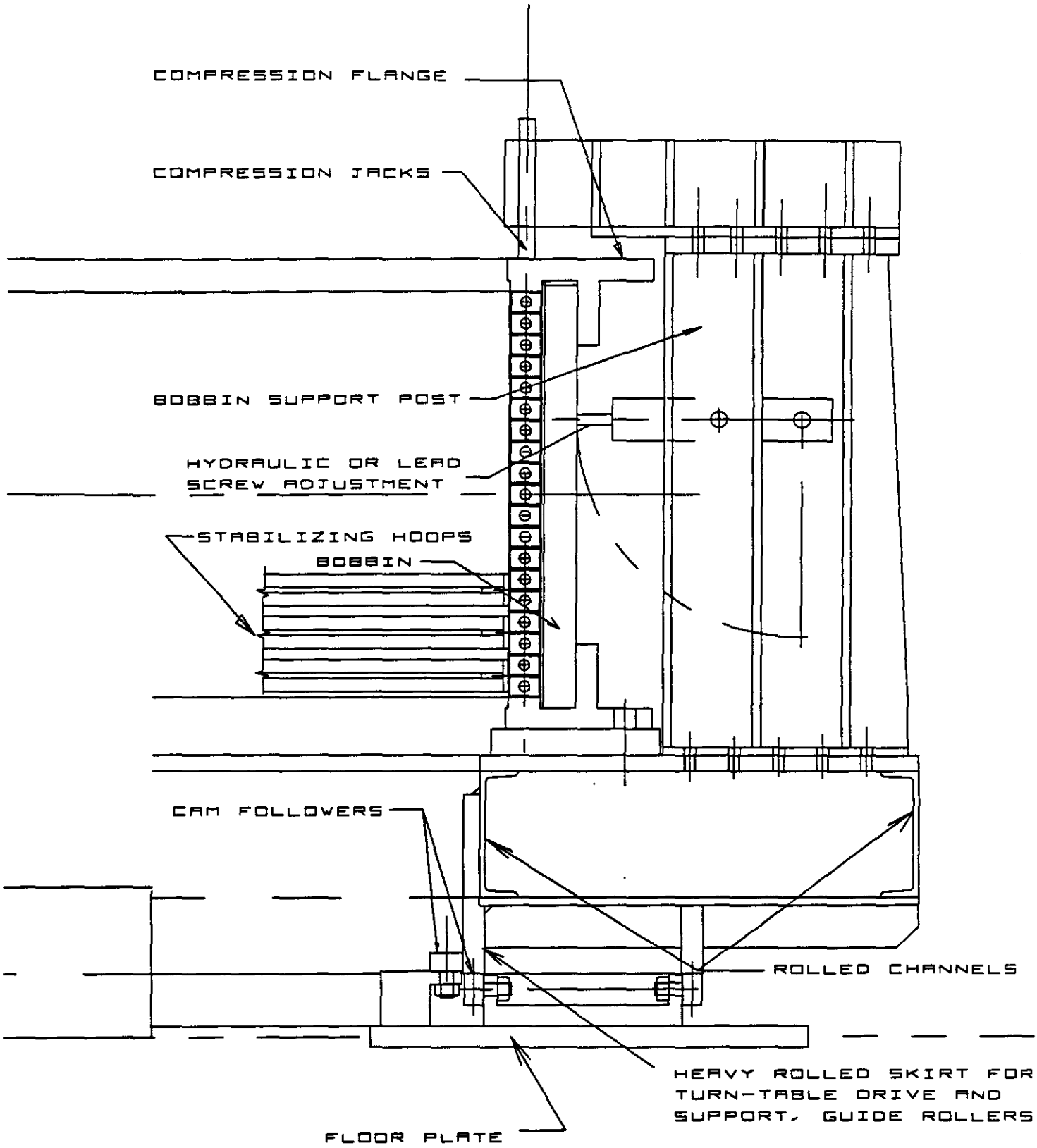

DETAIL OF WINDING CONCEPT

Phase III Prototype

Phase III work consist of winding one complete coil module.

a) Conductor/bobbin inner wall contact behavior.

Evaluate ways of dealing with the possible gaps that may occur between the conductor and the bobbin inner wall

b) Conductor winding schedule.

Evaluate ways of adjusting the winding to compensate for bobbin and conductor circumference differences.

c) axial conductor stability.

Evaluate whether the winding process requires inner radius stability jacks to prevent the conductor from buckling due to the axial compression.

d) winding initiation process.

Evaluate the winding start process and the required tooling to handle the joint halves, both at the beginning and end of the roll-forming (winding) process.

e) Roll-formers/turn-table control synchronization.

Evaluate and optimize the control and sensor equipment needed to synchronize the winding process.

f) Establish winding speed.

Optimize winding speed. This will directly affect the insulation, cleaning and conductor measuring equipment.

g) Conductor/insulation tolerances

Evaluate the conductor plus insulation tolerances.

G.E.M. MAGNET CONDUCTOR

OPTION I

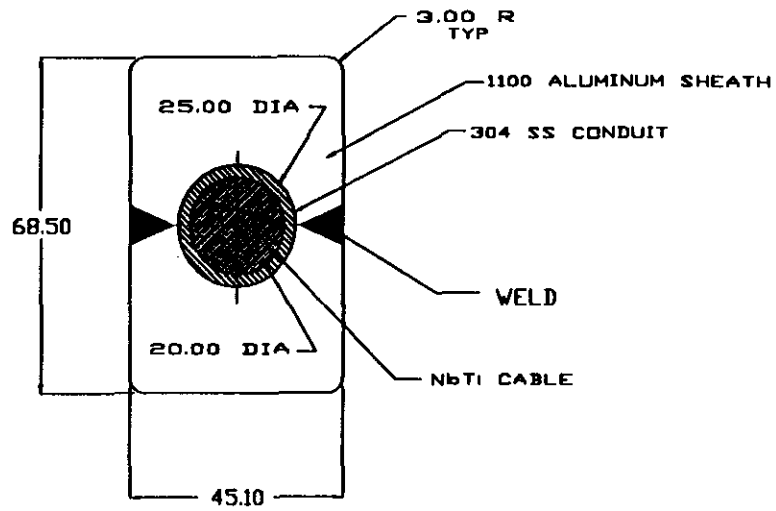

REVISIONS			
LTR	DESCRIPTION	DRN	DATE

REF	PART NO	NO REQ	DESCRIPTION

MATERIAL 1100 "O"	DIMENSIONS IN mm TOL UNLESS OTHERWISE SPECIFIED
FINISH	2 PLC DEC ± .13 1 PLC DEG ± .3
NEXT ASSY	ANGULAR ± 1/2 DEG
REMOVE ALL BURRS AND SHARP EDGES	CONCENTRICITY .127 TIR MACHINE SURFACES 63 √

PLASMA FUSION CENTER
MASS INSTITUTE OF TECHNOLOGY

MAGNET CONDUCTOR (OPTION I)
ASSY

DRN ALEX R.	10-15-92	SCALE:	SHT OF	
CHK		DWG B SIZE	1-120	REV O NO
APPD				

REVISIONS			
LTR	DESCRIPTION	DRN	DATE

G.E.M. MAGNET CONDUCTOR

OPTION II

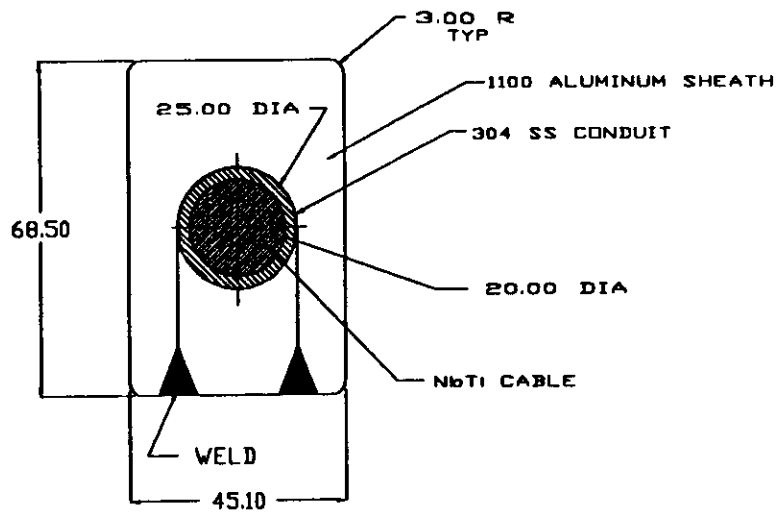

REF	PART NO	NO REQ	DESCRIPTION

MATERIAL 1100 "O"	DIMENSIONS IN mm TOL UNLESS OTHERWISE SPECIFIED
FINISH	2 PLC DEC ± .13 1 PLC DEC ± .3
NEXT ASSY	ANGULAR ± 1/2 DEG
REMOVE ALL BURRS AND SHARP EDGES	CONCENTRICITY .127 TIR MACHINE SURFACES 63

PLASMA FUSION CENTER
MASS INSTITUTE OF TECHNOLOGY

MAGNET CONDUCTOR (OPTION II)
ASSY

DRN ALEX R.	10-15-92	SCALE:	SHT	OF
CHK		DWG B SIZE	1-121	REV 0 NO
APPD				

Superconducting Super Collider

R&D on Conductor Joints

Zbigniew Piek
MIT/Plasma Fusion Center

13 January, 1993

G.E.M. MAGNET CONDUCTOR

OPTION I

REVISIONS			
LTR	DESCRIPTION	DRN	DATE

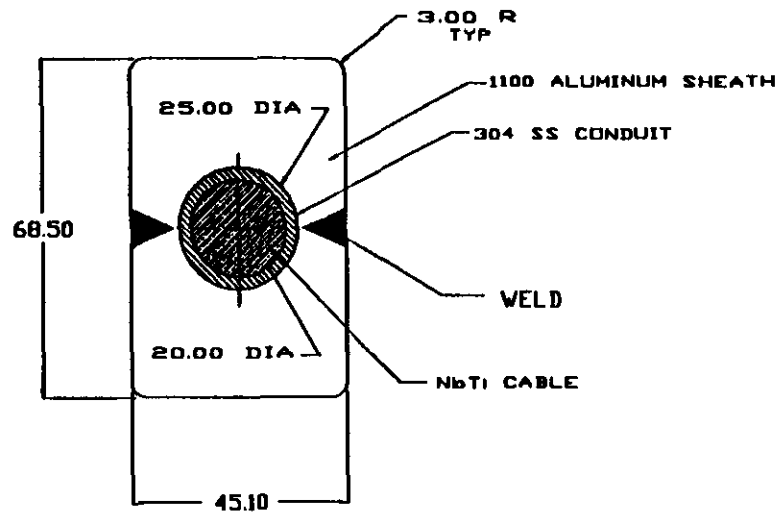

REF	PART NO	NO REQ	DESCRIPTION

MATERIAL 1100 "O"	DIMENSIONS IN mm TOL UNLESS OTHERWISE SPECIFIED
FINISH	2 PLC DEC ± .13 1 PLC DEC ± .3
NEXT ASSY	ANGULAR ± 1/2 DEG
REMOVE ALL BURRS AND SHARP EDGES	CONCENTRICITY .127 TIR MACHINE SURFACES 63 √

PLASMA FUSION CENTER
MASS INSTITUTE OF TECHNOLOGY

MAGNET CONDUCTOR (OPTION I)
ASSY

DRN ALEX R.	10-15-92	SCALE:	SHT OF	
CHK		DWG B SIZE	1-120	REV 0 NO
APPD				

REVISIONS			
LTR	DESCRIPTION	DRN	DATE

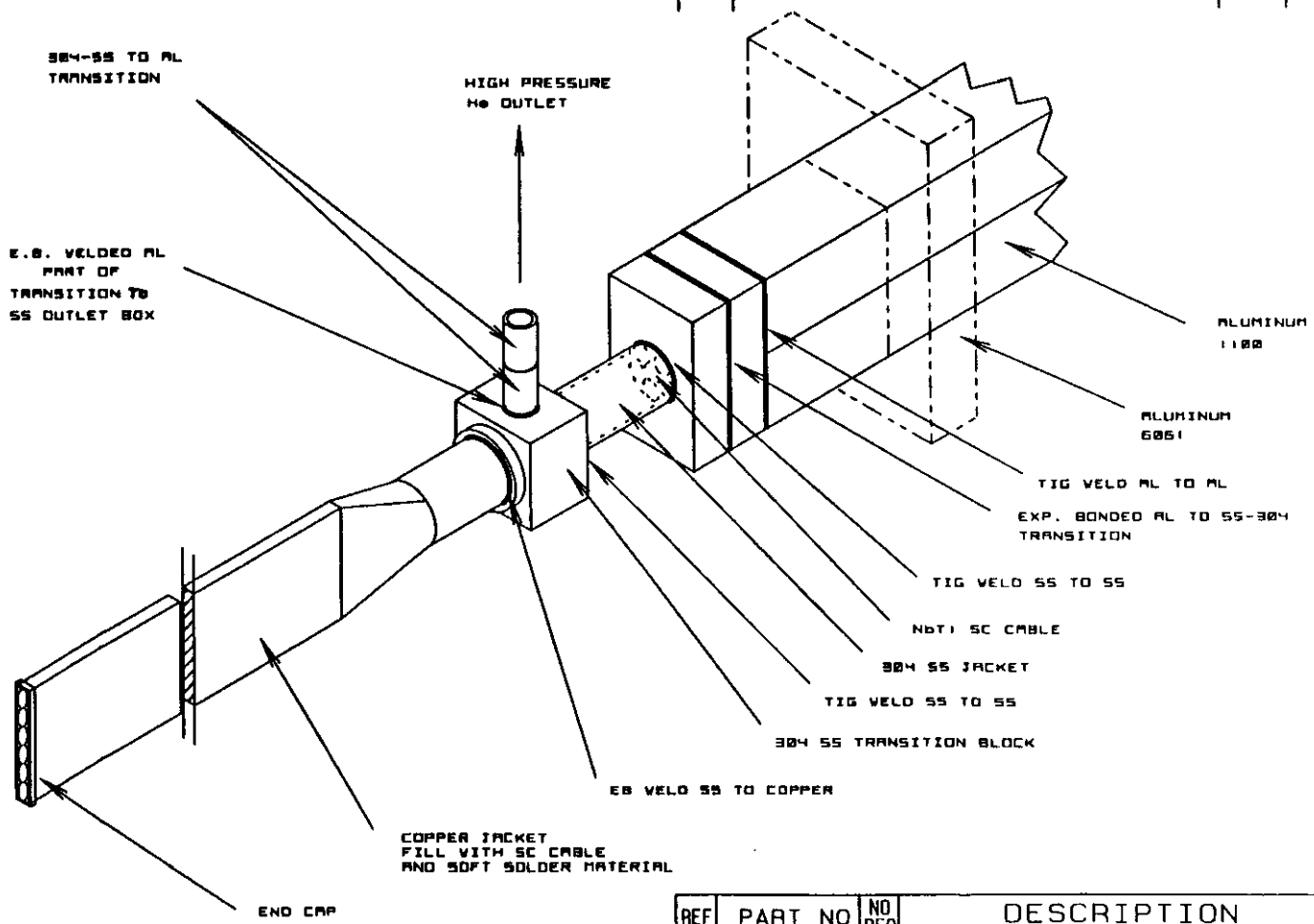

REF	PART NO	NO REQ	DESCRIPTION

PRELIMINARY

MATERIAL	DIMENSIONS IN MILLIMETERS TOL UNLESS OTHERWISE SPECIFIED
FINISH	TOLERANCES +/- .20 MACHINE SURFACES 63
NEXT ASSY	
REMOVE ALL BURRS AND SHARP EDGES	

PLASMA FUSION CENTER
MASS INSTITUTE OF TECHNOLOGY

HIGH PRESSURE He OUTLET
ASSEMBLY GUIDE

DRN		SCALE:	SHT	OF
CHK		DWG SIZE H	NV-0-001	REV 1 NO
APPD				

REVISIONS			
LTR	DESCRIPTION	DRN	DATE

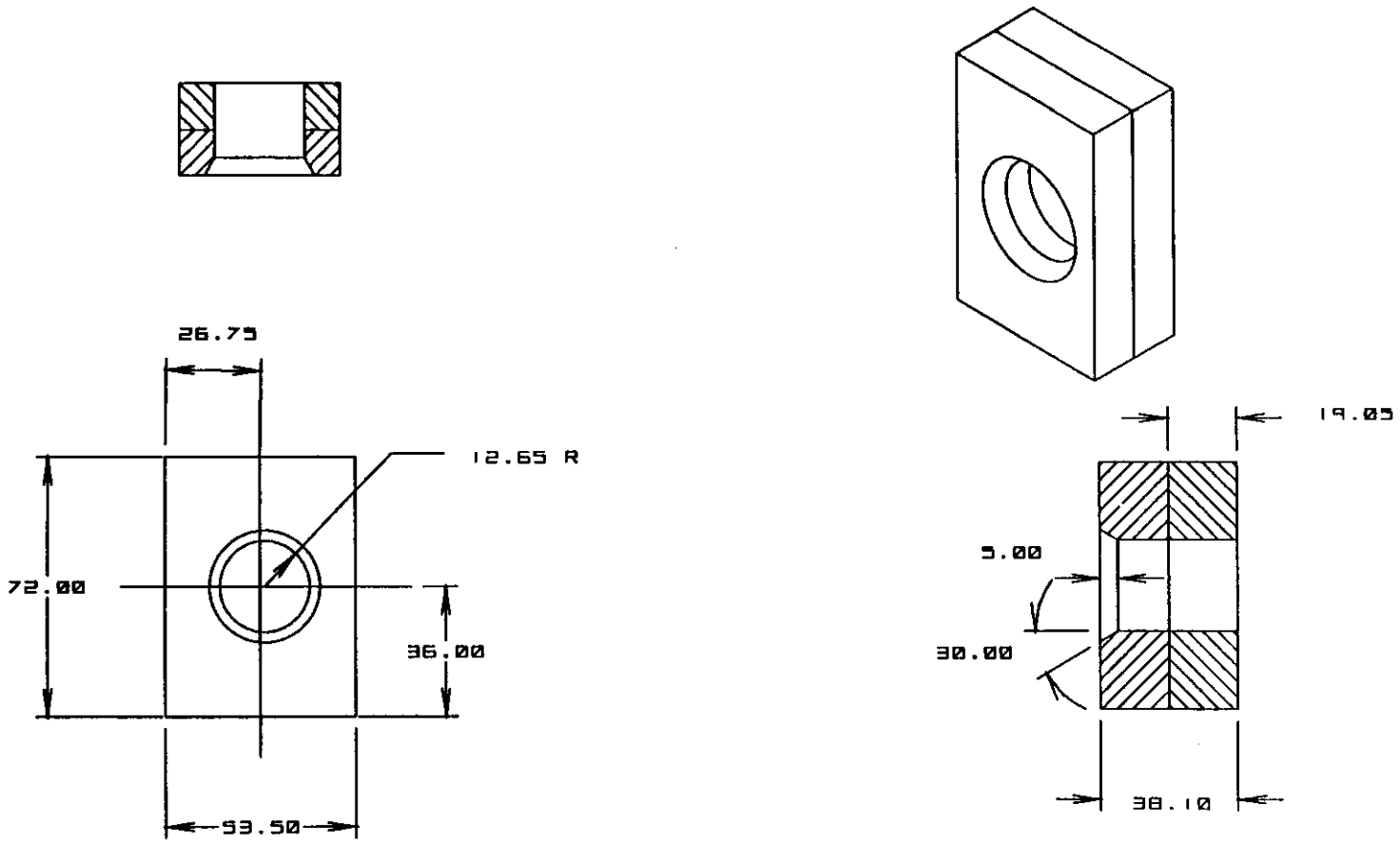

REF	PART NO	NO REQ	DESCRIPTION

PRELIMINARY

MATERIAL AL-6061 SS-304	DIMENSIONS IN MILLIMETERS TOL UNLESS OTHERWISE SPECIFIED	PLASMA FUSION CENTER MASS INSTITUTE OF TECHNOLOGY
FINISH	TOLERANCES +/- .20 MACHINE SURFACES 63	
NEXT ASSY		REINFORCING BLOCK
REMOVE ALL BURRS AND SHARP EDGES		

DRN		SCALE:	SHT	OF
CHK		DWG SIZE A	NV-0-005	REV NO
APPD				

REVISIONS			
LTR	DESCRIPTION	DRN	DATE

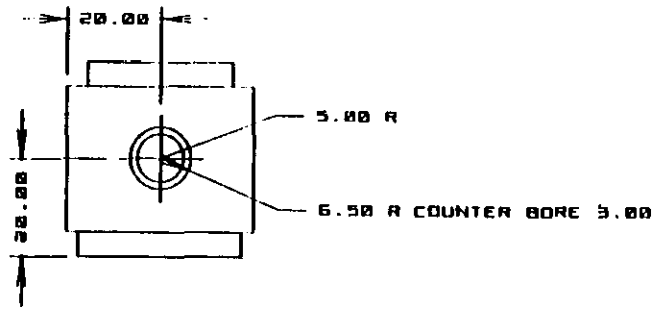

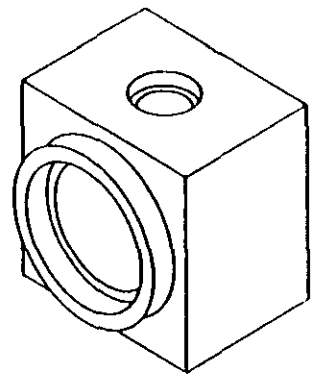

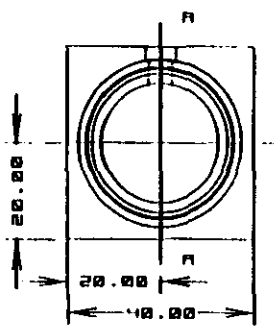

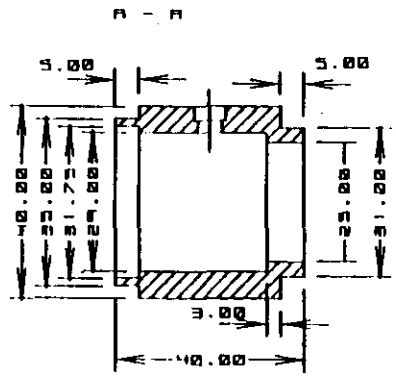

PRELIMINARY

MATERIAL	DIMENSIONS IN MILLIMETERS TOL UNLESS OTHERWISE SPECIFIED
SS-304	TOLERANCES +/- .20
FINISH	MACHINE SURFACES 63
NEXT ASSY	
REMOVE ALL BURRS AND SHARP EDGES	

REF	PART NO	NO REQ	DESCRIPTION

PLASMA FUSION CENTER
MASS INSTITUTE OF TECHNOLOGY

TRANSITION BLOCK

DRN	SCALE:	SHT OF
CHK	DWG SIZE	80-000-004
APPD		REV NO

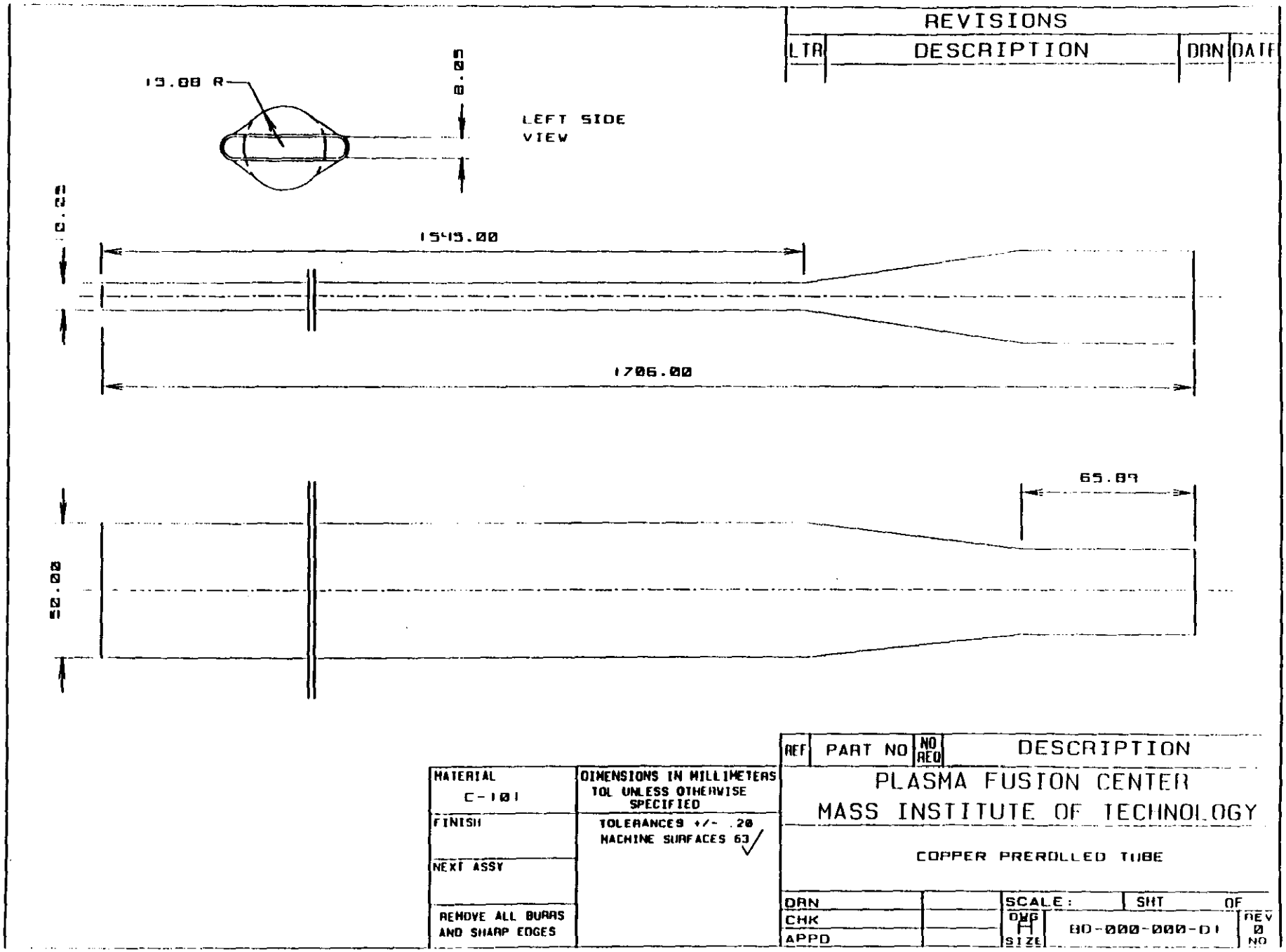
REVISIONS
LTR
DESCRIPTION
DRN
DATE
15.00 R
8.05
LEFT SIDE VIEW
10.25
1545.00
1706.00
65.89
50.00
MATERIAL
C-101
FINISH
NEXT ASSY
REMOVE ALL BURRS AND SHARP EDGES
DIMENSIONS IN MILLIMETERS
TOL UNLESS OTHERWISE SPECIFIED
TOLERANCES +/- .20
MACHINE SURFACES 63
REF
PART NO
NO REQ
DESCRIPTION
PLASMA FUSION CENTER
MASS INSTITUTE OF TECHNOLOGY
COPPER PREROLLED TUBE
DRN
CHK
APPD
SCALE:
SHT
OF
DWG SIZE
H
80-000-000-01
REV NO
0

REVISIONS			
LTR	DESCRIPTION	DRN	DATE

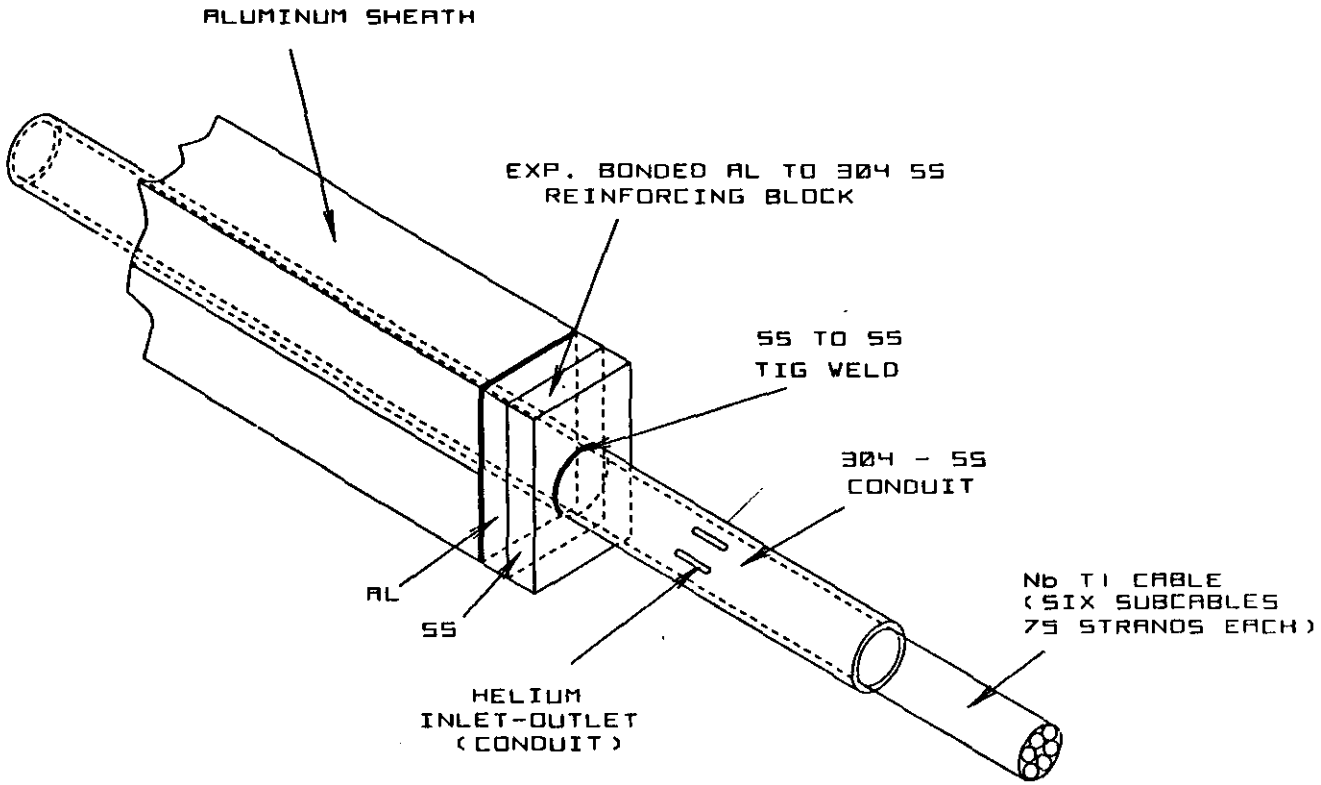

PRELIMINARY

NOTE: THICK LINES REPRESENT WELDS DURING STEP#1

REF	PART NO	NO REQ	DESCRIPTION

MATERIAL	DIMENSIONS IN MILLIMETERS TOL UNLESS OTHERWISE SPECIFIED	PLASMA FUSION CENTER MASS INSTITUTE OF TECHNOLOGY
FINISH	TOLERANCES +/- .20 MACHINE SURFACES 63	ALUMINUM WELDED JOINT ASSEMBLY STEP #1
NEXT ASSY		
REMOVE ALL BURRS AND SHARP EDGES		DRN / CHK / APPD — SCALE: — SHT OF — DWG SIZE H — AW-001-001 — REV NO 0

REVISIONS			
LTR	DESCRIPTION	DRN	DATE

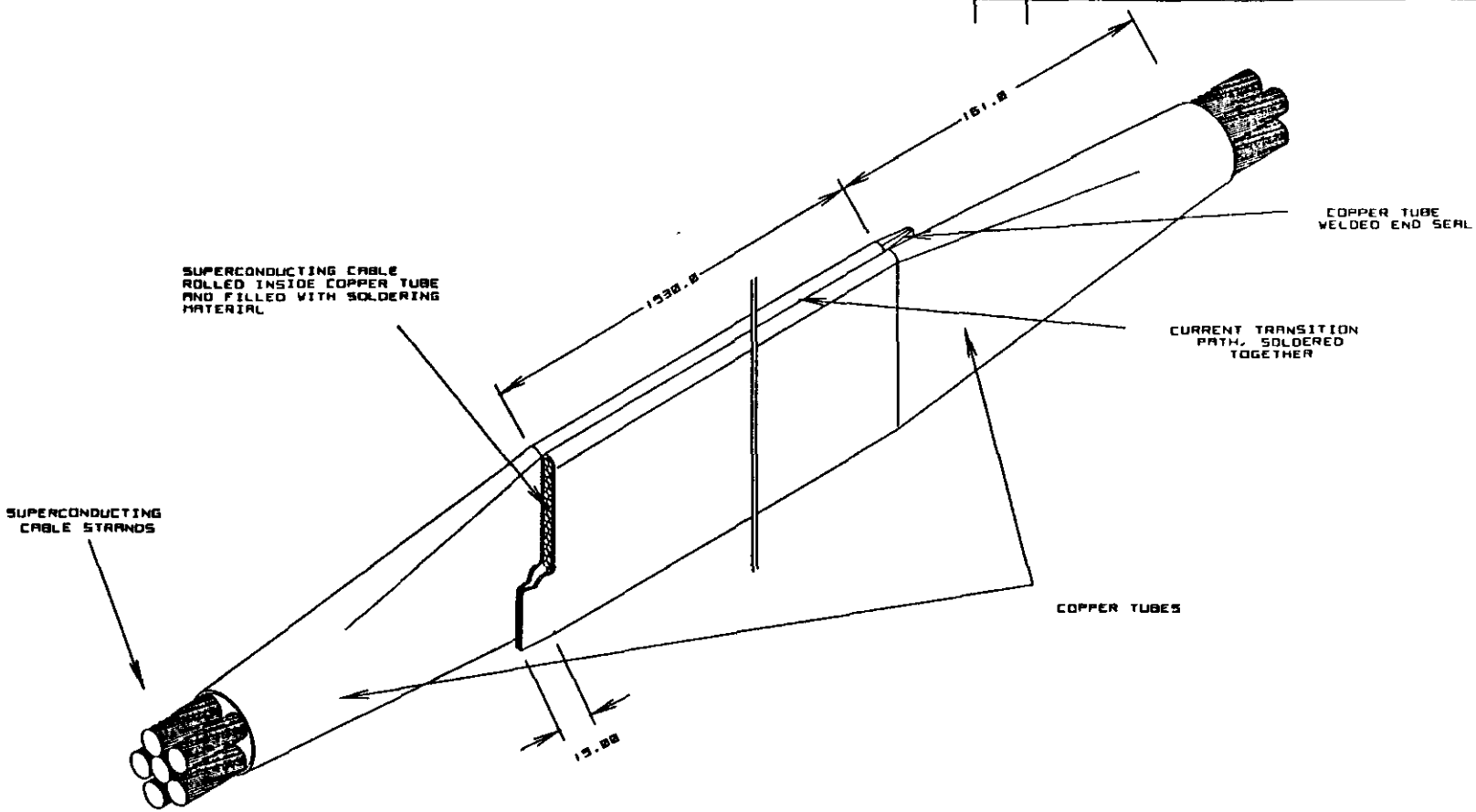

PRELIMINARY

MATERIAL	DIMENSIONS IN MILLIMETERS TOL UNLESS OTHERWISE SPECIFIED
FINISH	TOLERANCES +/- .25 MACHINE SURFACES 63
NEXT ASSY	
REMOVE ALL BURRS AND SHARP EDGES	

REF	PART NO	NO REQ	DESCRIPTION

PLASMA FUSION CENTER
MASS INSTITUTE OF TECHNOLOGY

LAP JOINT CONFIGURATION

DRN		SCALE:	SHT OF
CHK		DWG SIZE	000-000-D
APPD			REV NO

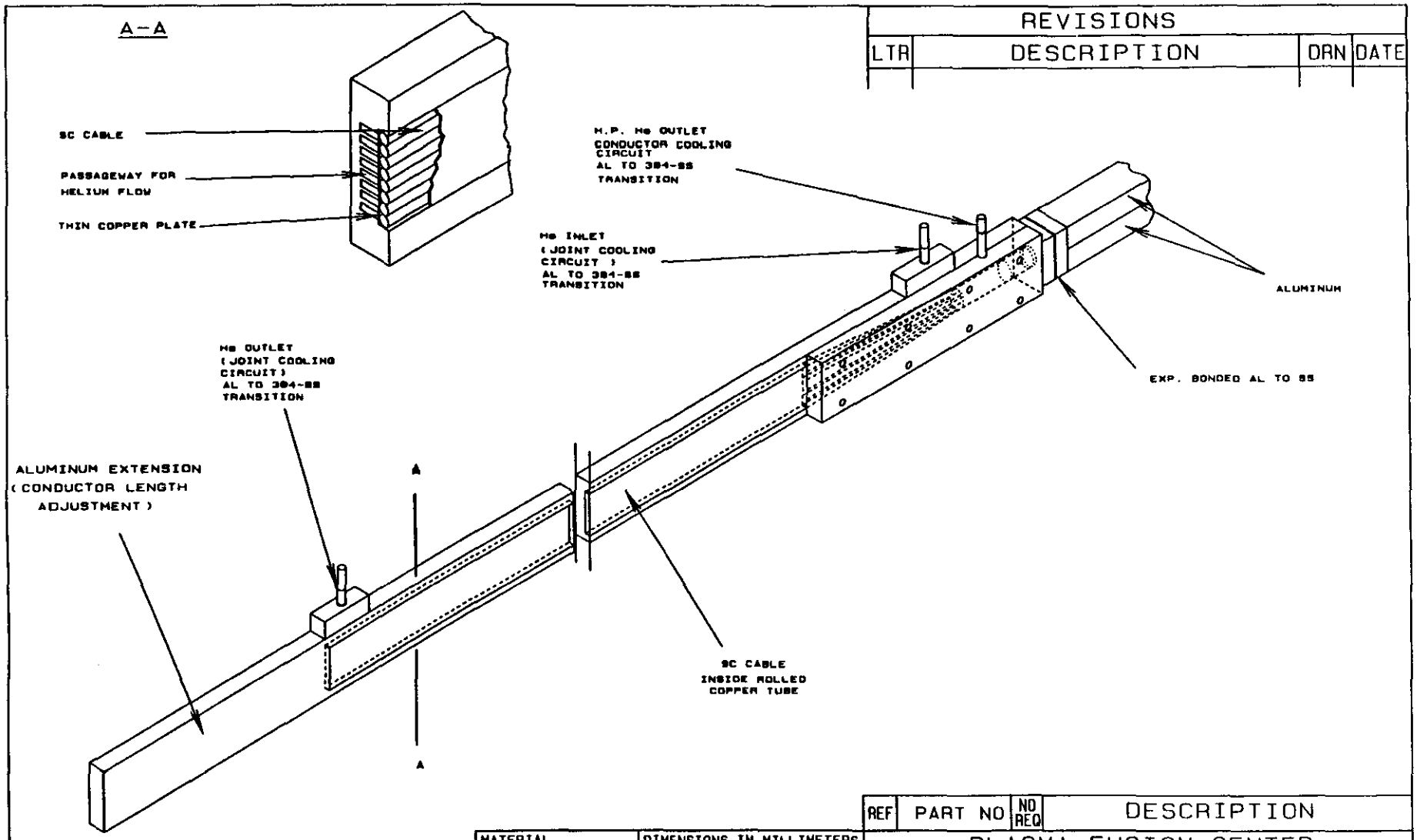

REVISIONS			
LTR	DESCRIPTION	DRN	DATE

REF	PART NO	NO REQ	DESCRIPTION

MATERIAL	DIMENSIONS IN MILLIMETERS TOL UNLESS OTHERWISE SPECIFIED
FINISH	TOLERANCES +/- .20 MACHINE SURFACES 63
NEXT ASSY	
REMOVE ALL BURRS AND SHARP EDGES	

PRELIMINARY

PLASMA FUSION CENTER
MASS INSTITUTE OF TECHNOLOGY

MODULE COIL END ASSEMBLY

DRN		SCALE:	SHT	OF
CHK		DWG SIZE	NV-0-003	REV 0 NO
APPD				

REVISIONS			
LTR	DESCRIPTION	DRN	DATE

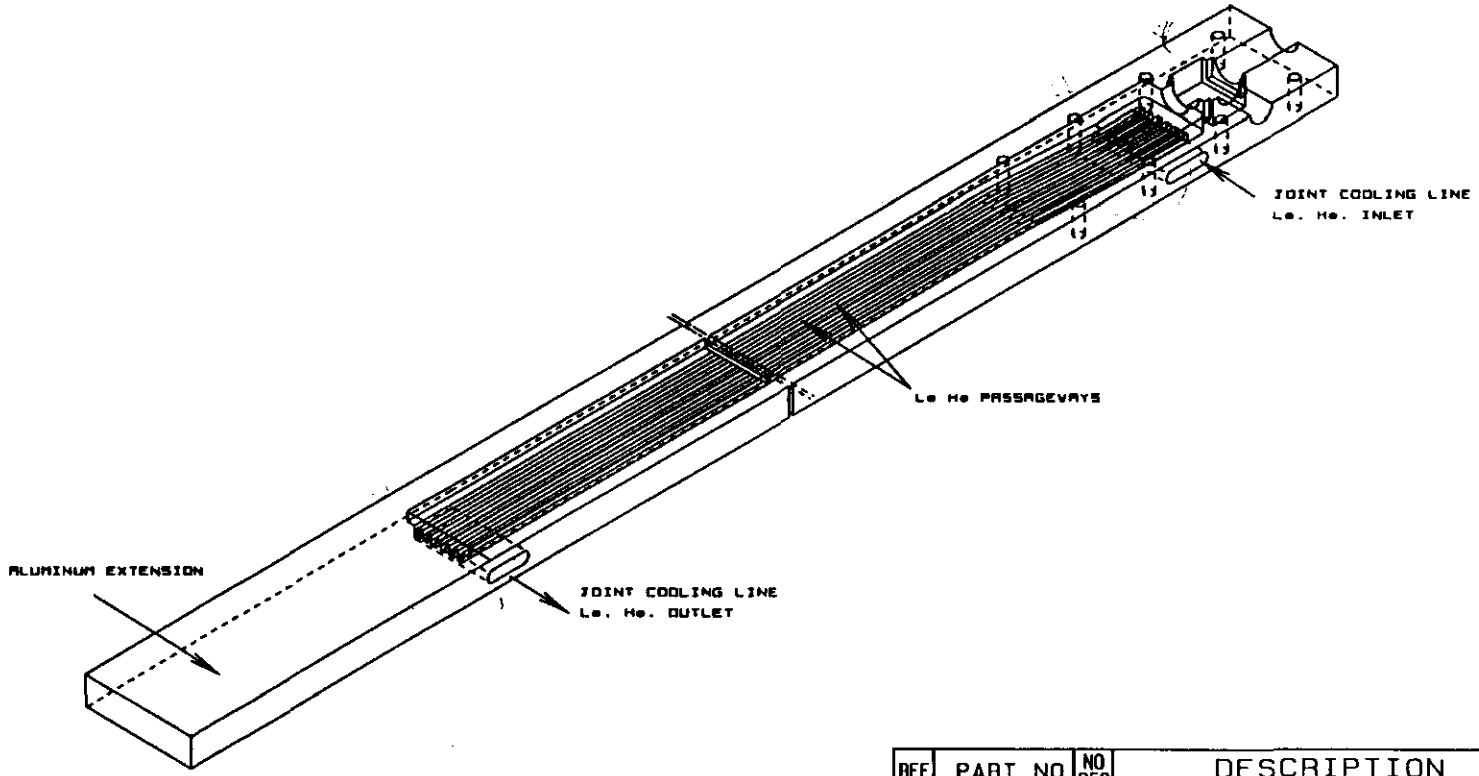

REF	PART NO	NO REQ	DESCRIPTION

PRELIMINARY

MATERIAL C-181	DIMENSIONS IN MILLIMETERS TOL UNLESS OTHERWISE SPECIFIED
FINISH	TOLERANCES +/- .20 MACHINE SURFACES 63
NEXT ASSY	
REMOVE ALL BURRS AND SHARP EDGES	

PLASMA FUSION CENTER
MASS INSTITUTE OF TECHNOLOGY

BOTTOM ALUMINUM BLOCK

DRN		SCALE:	SHT	OF
CHK		DWG SIZE	80-081-002	REV NO
APPD				

REVISIONS			
LTR	DESCRIPTION	DRN	DATE

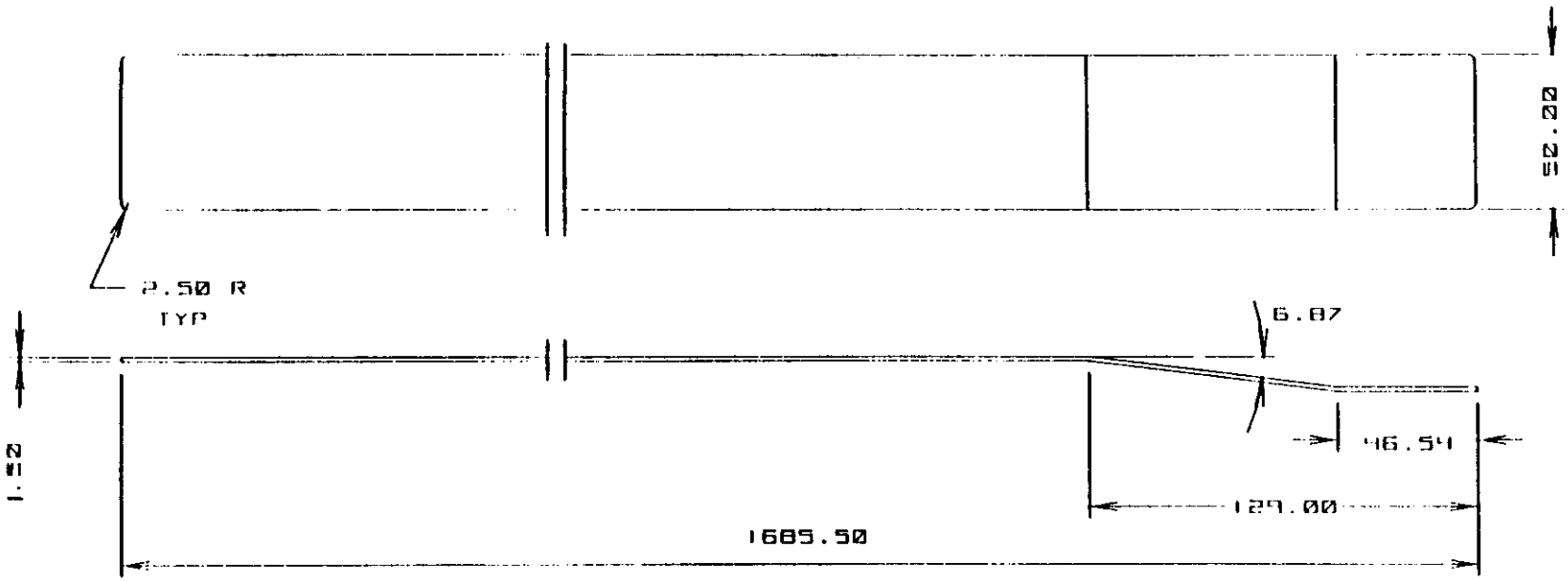

PRELIMINARY

MATERIAL C-101	DIMENSIONS IN MILLIMETERS TOL UNLESS OTHERWISE SPECIFIED	REF	PART NO	NO REQ	DESCRIPTION
FINISH	TOLERANCES +/- .25 MACHINE SURFACES 63	PLASMA FUSION CENTER MASS INSTITUTE OF TECHNOLOGY			
NEXT ASSY		THIN COPPER SHEET			
REMOVE ALL BURRS AND SHARP EDGES		DRN / CHK / APPD	SCALE:	SHT	OF
		SIZE H	80-001-001-H	REV NO 0	

REVISIONS		
LTR	DESCRIPTION	DRN DATE

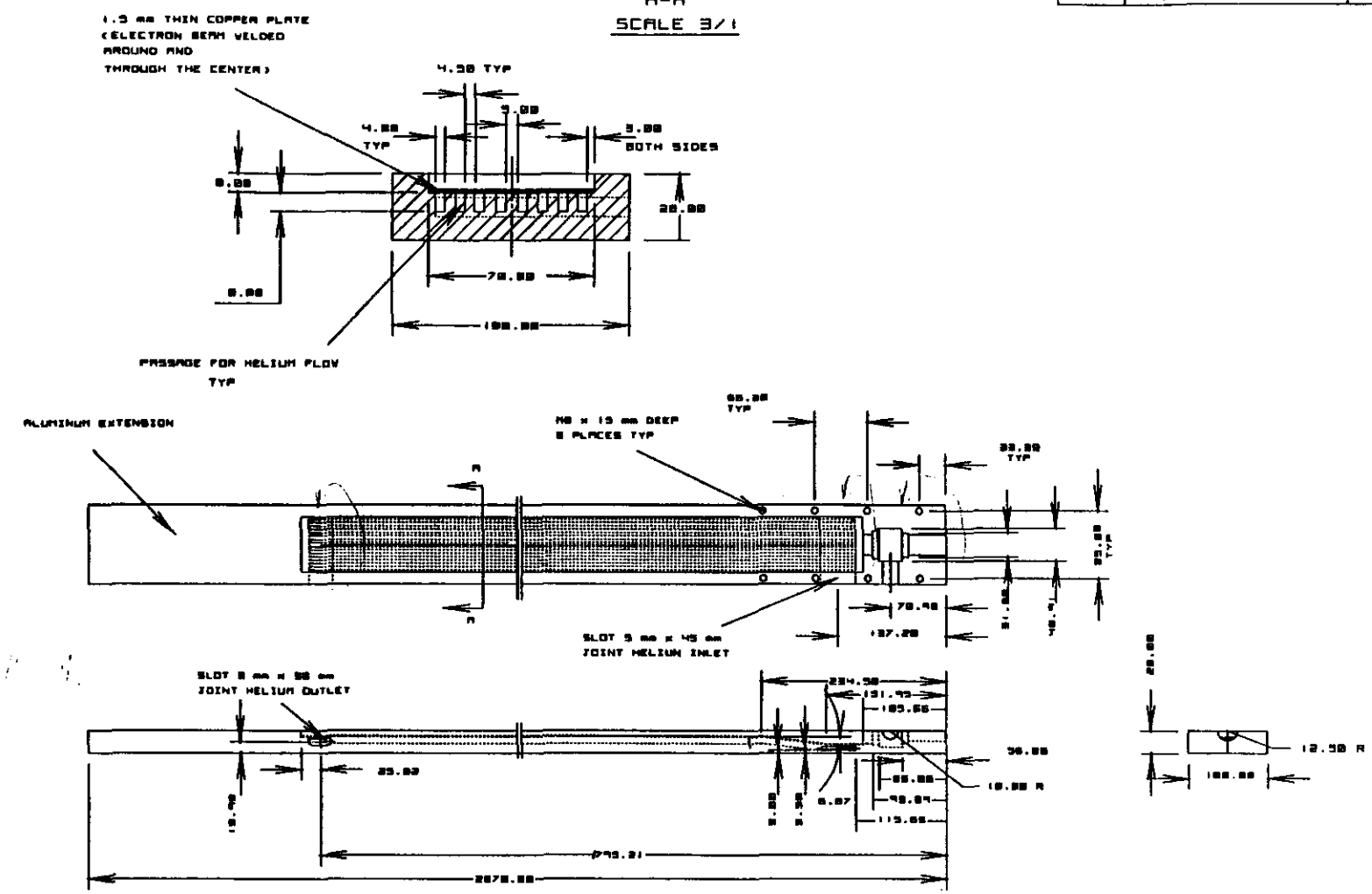

REF	PART NO	NO REQ	DESCRIPTION
			PLASMA FUSION CENTER MASS INSTITUTE OF TECHNOLOGY
			GEM JOINT ALUMINUM BLOCK

MATERIAL	DIMENSIONS IN INCHES TOL UNLESS OTHERWISE SPECIFIED	DRN	SCALE: 1/2
FINISH	3 PLC DEC ±/- .005 2 PLC DEC ±/- .010 FRACTIONS ±/- 1/64 ANGULAR ±/- 1/2 DEG CONCENTRICITY .005 TIR MACHINE SURFACES 63	CHK	SHT OF
NEXT ASSY		APPD	NV-1-861-F.COOL
REMOVE ALL BURRS AND SHARP EDGES			REV

REVISIONS			
LTR	DESCRIPTION	DRN	DATE

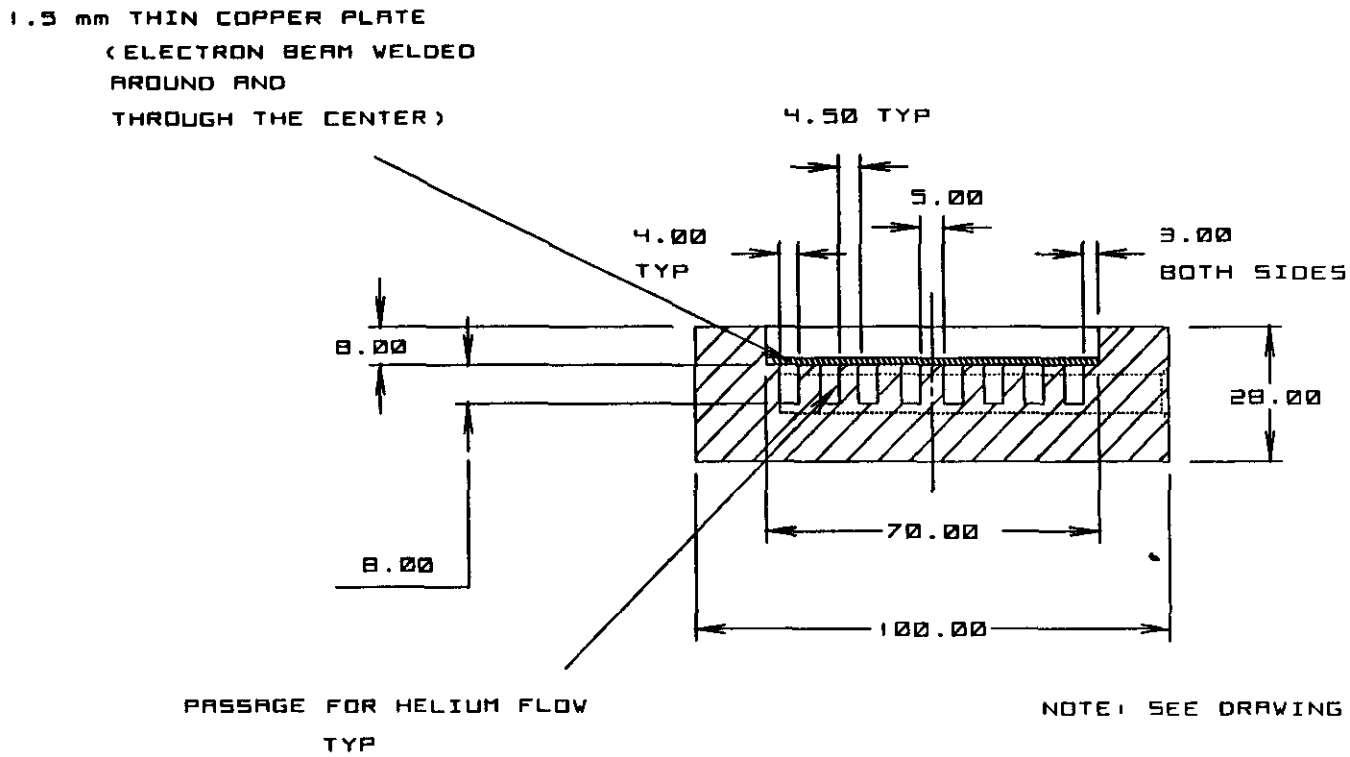

NOTE: SEE DRAWING # NV-1-001

PRELIMINARY

MATERIAL [redacted] AL-1100	DIMENSIONS IN MILLIMETERS TOL UNLESS OTHERWISE SPECIFIED	
FINISH	TOLERANCES +/- .20 MACHINE SURFACES 63	
NEXT ASSY		
REMOVE ALL BURRS AND SHARP EDGES		

REF	PART NO	NO REQ	DESCRIPTION

PLASMA FUSION CENTER
MASS INSTITUTE OF TECHNOLOGY

ALUMINUM BLOCK (BOTTOM)
CROSSECTION

DRN		SCALE:	SHT	OF
CHK		DWG SIZE H	NV-1-003	REV NO 0
APPD				

REVISIONS			
LTR	DESCRIPTION	DRN	DATE

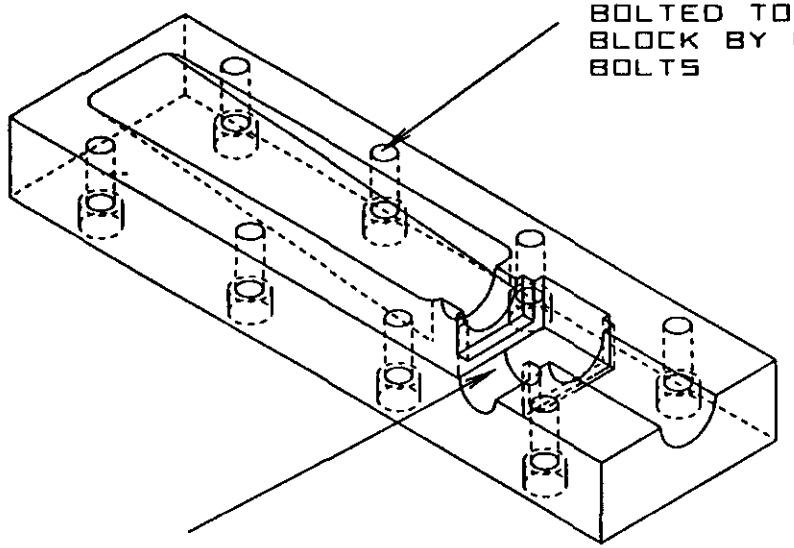

PRELIMINARY

MATERIAL	DIMENSIONS IN MILLIMETERS TOL UNLESS OTHERWISE SPECIFIED
AL-1100	
FINISH	TOLERANCES +/- .20 MACHINE SURFACES 63
NEXT ASSY	
REMOVE ALL BURRS AND SHARP EDGES	

REF	PART NO	NO REQ	DESCRIPTION

PLASMA FUSION CENTER
MASS INSTITUTE OF TECHNOLOGY

TOP ALUMINUM BLOCK

DRN		SCALE:	SHT	OF
CHK		DWG SIZE H	NV-1-005	REV NO 0
APPD				

REVISIONS			
LTR	DESCRIPTION	DRN	DATE

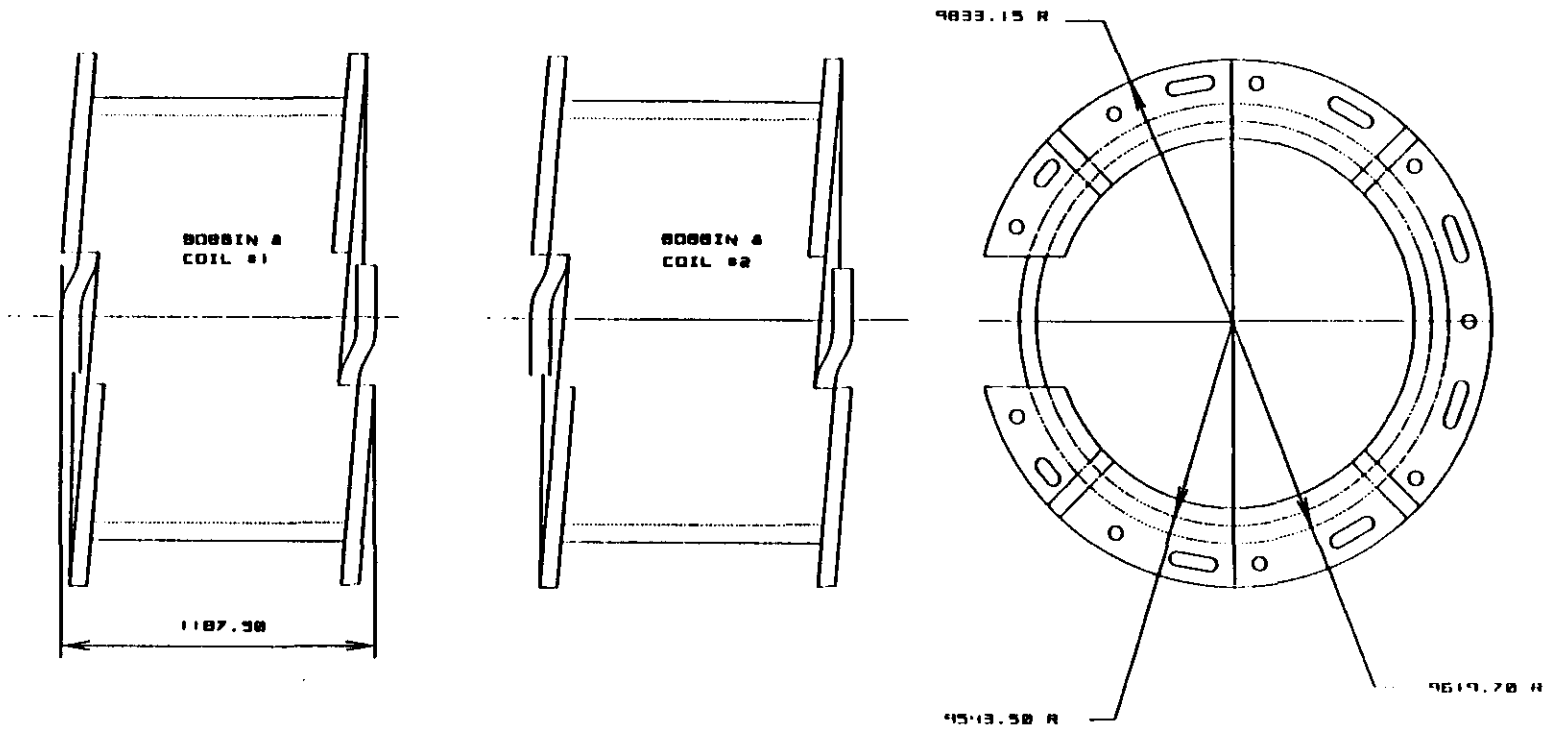

PRELIMINARY

MATERIAL AL-5086	DIMENSIONS IN MILLIMETERS TOL UNLESS OTHERWISE SPECIFIED
FINISH	
NEXT ASSY	
REMOVE ALL BURRS AND SHARP EDGES	

REF	PART NO	NO REQ	DESCRIPTION

PLASMA FUSION CENTER
MASS INSTITUTE OF TECHNOLOGY

COIL UNIT ASSEMBLY DIM. (REF.)

DRN		SCALE:	SHT OF
CHK		DWG SIZE	AD-0041-001
APPD			REV NO 0

REVISIONS			
LTR	DESCRIPTION	DRN	DATE

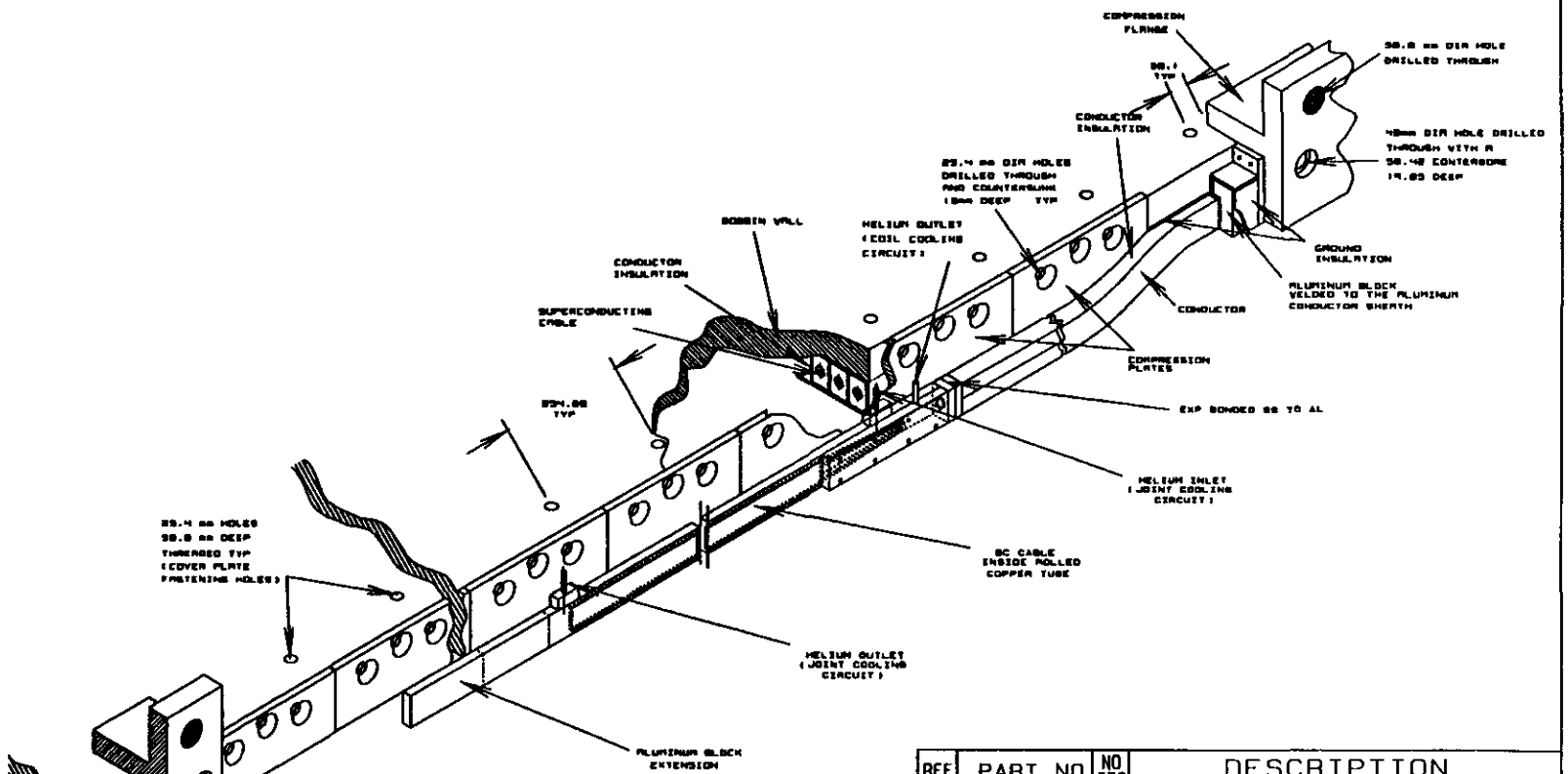

PRELIMINARY

MATERIAL	DIMENSIONS IN MILLIMETERS TOL UNLESS OTHERWISE SPECIFIED
FINISH	TOLERANCES +/- .20 MACHINE SURFACES 63
NEXT ASSY	
REMOVE ALL BURRS AND SHARP EDGES	

REF	PART NO	NO REQ	DESCRIPTION

PLASMA FUSION CENTER
MASS INSTITUTE OF TECHNOLOGY

GEM COIL UNIT JOINT TERMINATION

DRN		SCALE:	SHT OF
CHK		DWG SIZE H	NV-5-006
APPD			REV NO 0

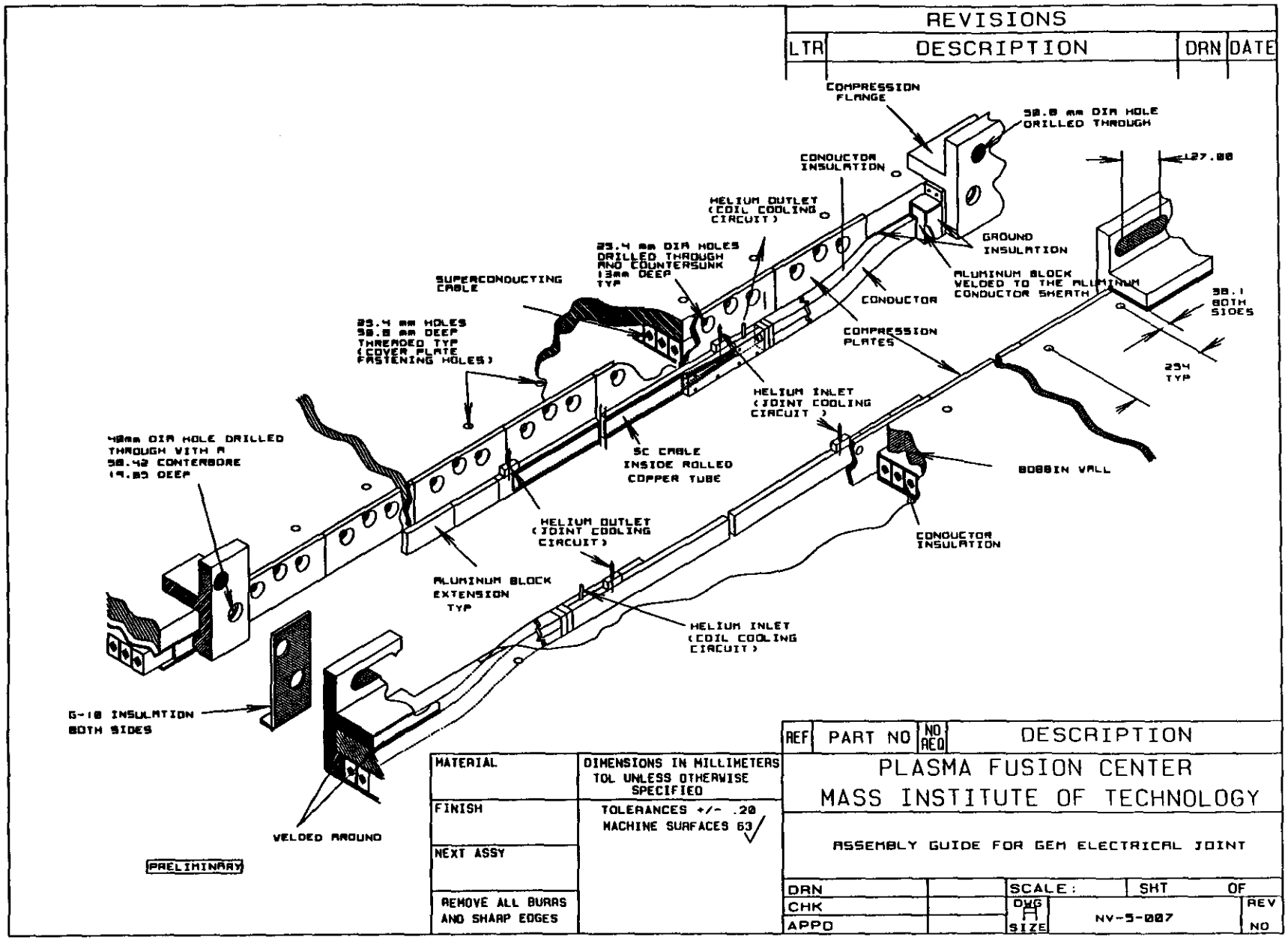
REVISIONS
LTR
DESCRIPTION
DRN
DATE
COMPRESSION FLANGE
50.8 mm DIA HOLE DRILLED THROUGH
127.00
CONDUCTOR INSULATION
HELIUM OUTLET (COIL COOLING CIRCUIT)
GROUND INSULATION
25.4 mm DIA HOLES DRILLED THROUGH AND COUNTERSUNK 13mm DEEP TYP
SUPERCONDUCTING CABLE
ALUMINUM BLOCK WELDED TO THE ALUMINUM CONDUCTOR SHEATH
CONDUCTOR
38.1 BOTH SIDES
25.4 mm HOLES 50.8 mm DEEP THREADED TYP (COVER PLATE FASTENING HOLES)
COMPRESSION PLATES
254 TYP
HELIUM INLET (JOINT COOLING CIRCUIT)
48mm DIA HOLE DRILLED THROUGH WITH A 58.42 CONTERBORE 19.05 DEEP
SC CABLE INSIDE ROLLED COPPER TUBE
BOBBIN WALL
HELIUM OUTLET (JOINT COOLING CIRCUIT)
CONDUCTOR INSULATION
ALUMINUM BLOCK EXTENSION TYP
HELIUM INLET (COIL COOLING CIRCUIT)
G-10 INSULATION BOTH SIDES
VELDED AROUND
PRELIMINARY
REF
PART NO
NO REQ
DESCRIPTION
MATERIAL
DIMENSIONS IN MILLIMETERS TOL UNLESS OTHERWISE SPECIFIED
PLASMA FUSION CENTER
MASS INSTITUTE OF TECHNOLOGY
FINISH
TOLERANCES +/- .20
MACHINE SURFACES 63
NEXT ASSY
ASSEMBLY GUIDE FOR GEM ELECTRICAL JOINT
REMOVE ALL BURRS AND SHARP EDGES
DRN
CHK
APPD
SCALE:
SHT
OF
DWG SIZE
A
NV-5-007
REV NO

REVISIONS			
LTR	DESCRIPTION	DRN	DATE

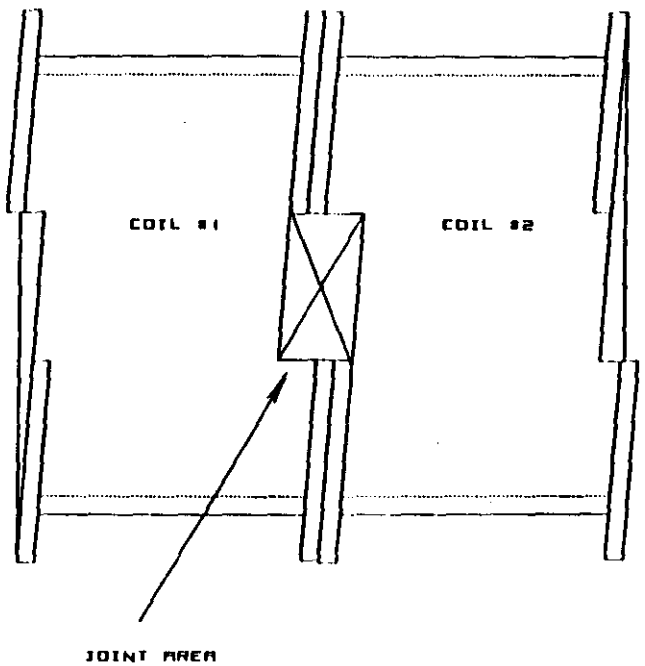

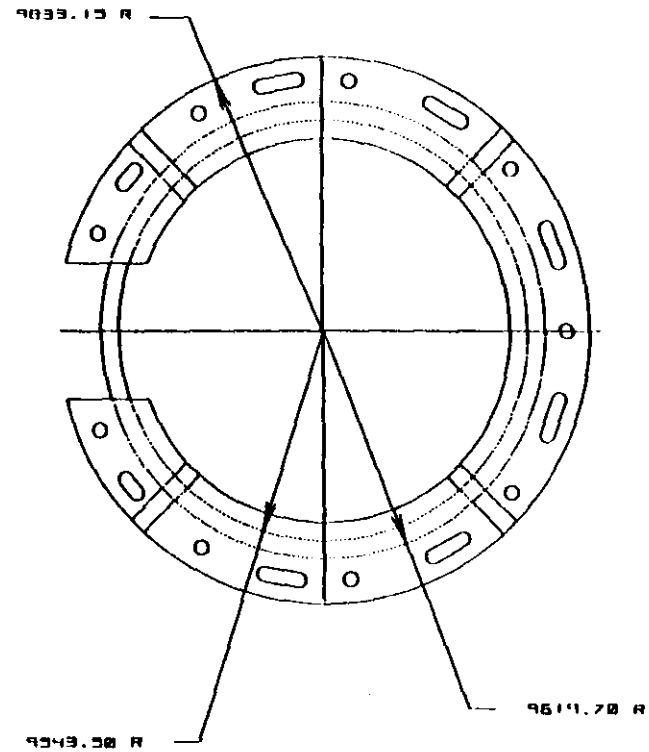

PRELIMINARY

MATERIAL	DIMENSIONS IN MILLIMETERS TOL UNLESS OTHERWISE SPECIFIED
AL-6061	
FINISH	
NEXT ASSY	
REMOVE ALL BURRS AND SHARP EDGES	

REF	PART NO	NO REQ	DESCRIPTION

PLASMA FUSION CENTER
MASS INSTITUTE OF TECHNOLOGY

TWO COIL UNITS ASSEMBLY (REF)

DRN		SCALE:	SHT OF
CHK		DWG SIZE A1	BD-0011-002
APPD			REV NO 0

REVISIONS			
LTR	DESCRIPTION	DRN	DATE

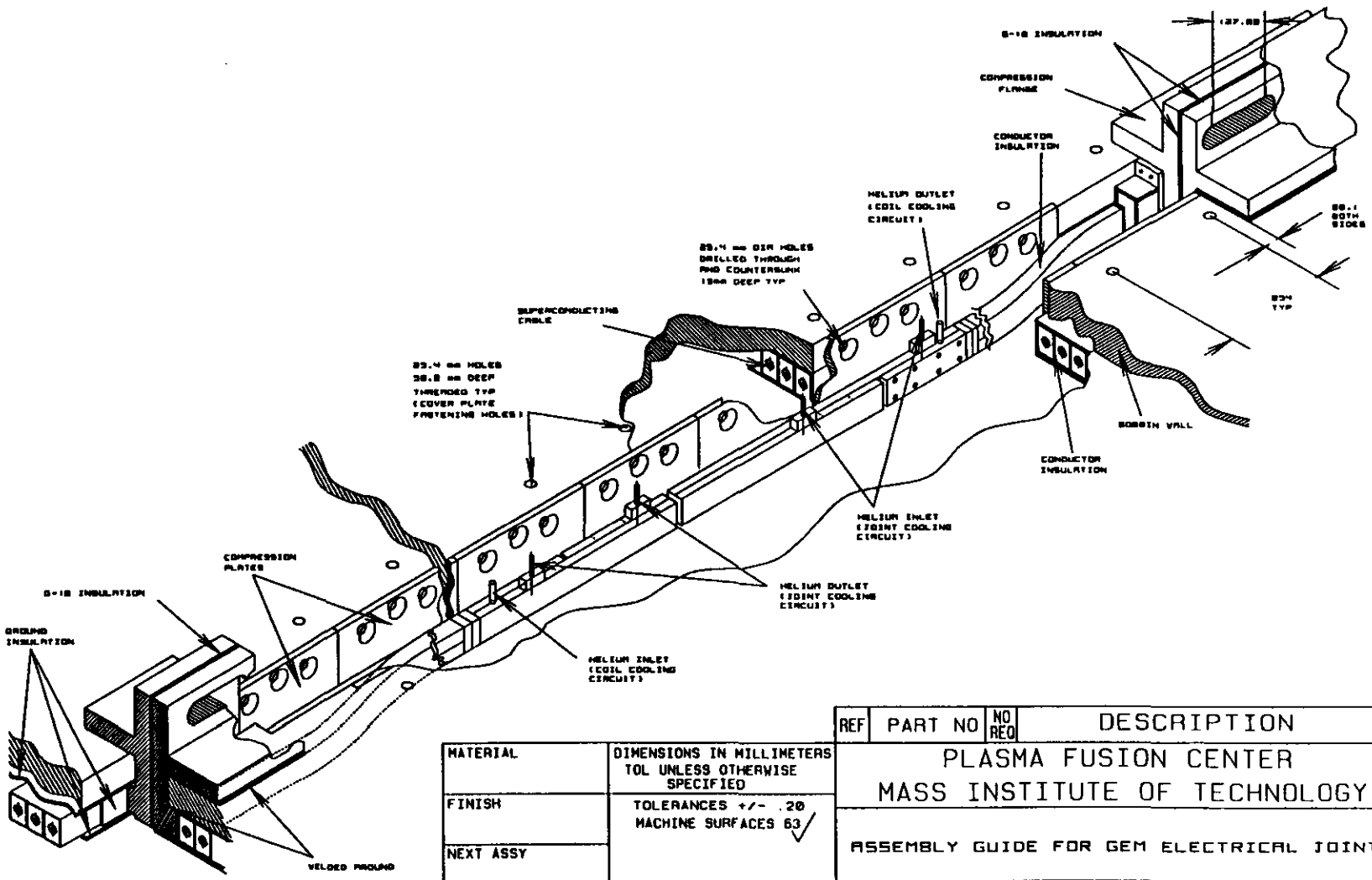

PRELIMINARY

MATERIAL	DIMENSIONS IN MILLIMETERS TOL UNLESS OTHERWISE SPECIFIED
FINISH	TOLERANCES +/- .20 MACHINE SURFACES 63
NEXT ASSY	
REMOVE ALL BURRS AND SHARP EDGES	

REF	PART NO	NO REQ	DESCRIPTION

PLASMA FUSION CENTER
MASS INSTITUTE OF TECHNOLOGY

ASSEMBLY GUIDE FOR GEM ELECTRICAL JOINT

DRN		SCALE:	SHT	OF
CHK		DWG SIZE	NV-5-008	REV NO
APPD				

REVISIONS			
LTR	DESCRIPTION	DRN	DATE

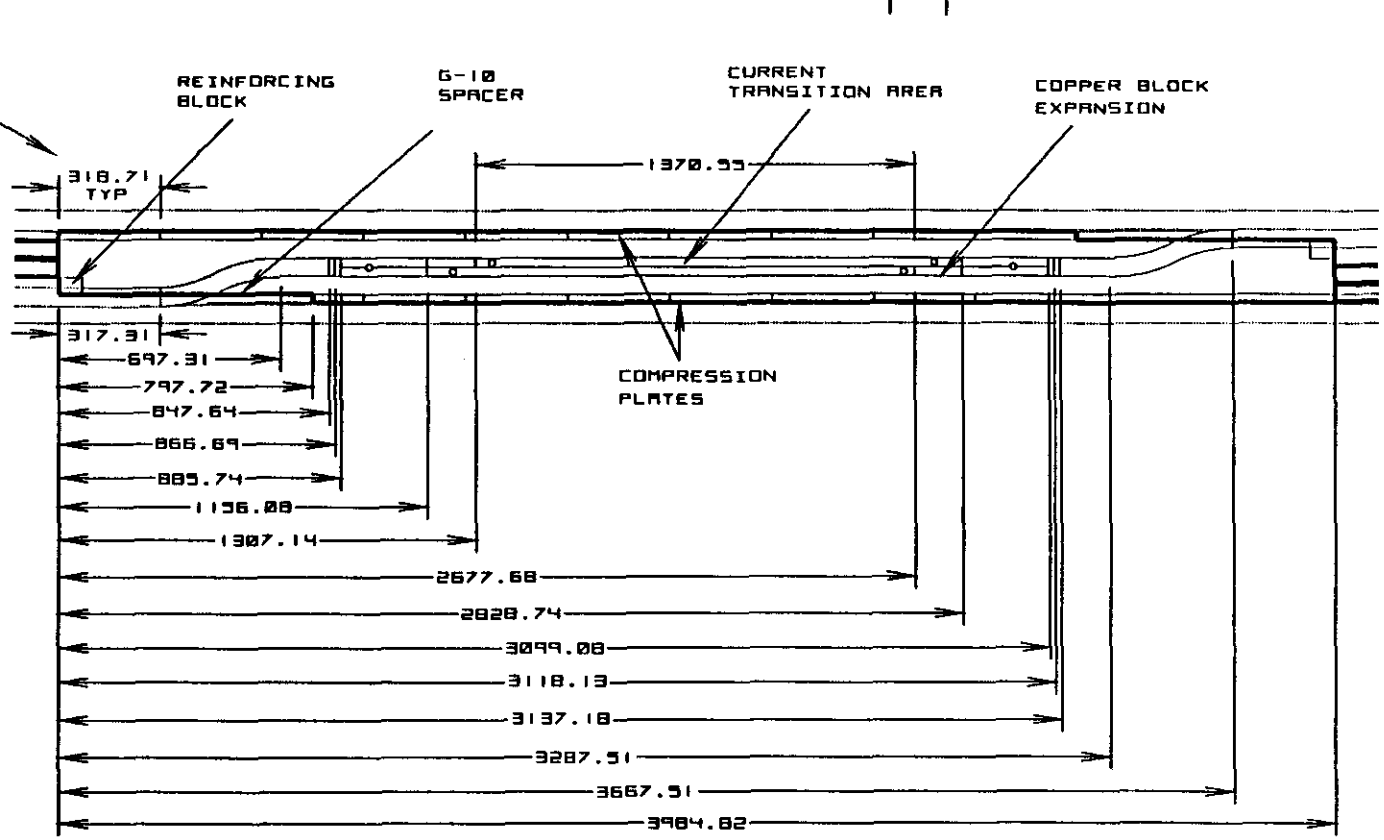

PRELIMINARY

REF	PART NO	NO REQ	DESCRIPTION

MATERIAL	DIMENSIONS IN MILLIMETERS TOL UNLESS OTHERWISE SPECIFIED
FINISH	TOLERANCES +/- .20 MACHINE SURFACES 63
NEXT ASSY	
REMOVE ALL BURRS AND SHARP EDGES	

PLASMA FUSION CENTER
MASS INSTITUTE OF TECHNOLOGY

JOINT IN NOMINAL POSITION

DRN		SCALE:	SHT OF
CHK		OWG SIZE A	NV-5-001-A
APPD			REV NO

REVISIONS			
LTR	DESCRIPTION	DRN	DATE

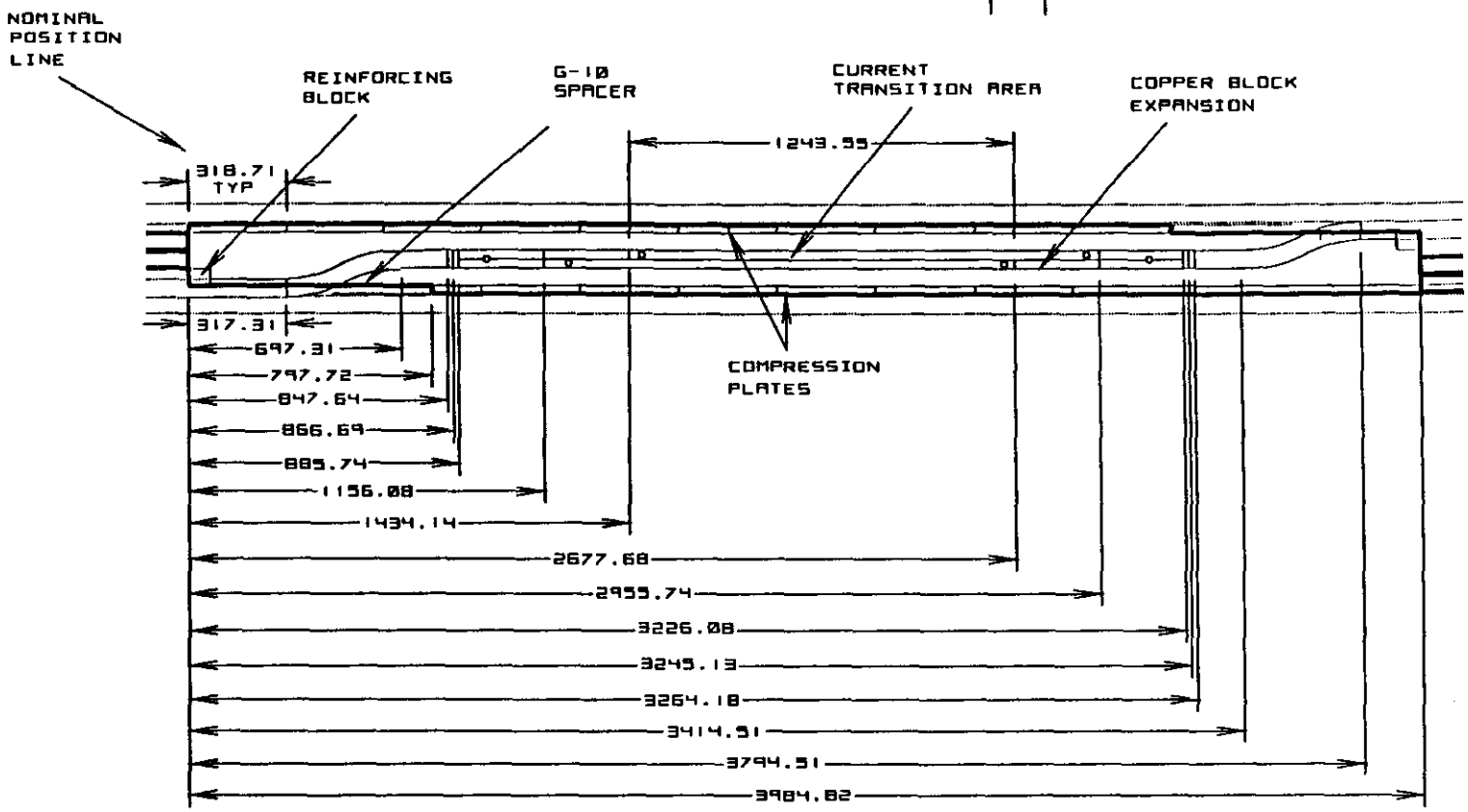

PRELIMINARY

MATERIAL	DIMENSIONS IN MILLIMETERS TOL UNLESS OTHERWISE SPECIFIED
FINISH	TOLERANCES +/- .20 MACHINE SURFACES 63
NEXT ASSY	
REMOVE ALL BURRS AND SHARP EDGES	

REF	PART NO	NO REQ	DESCRIPTION

PLASMA FUSION CENTER
MASS INSTITUTE OF TECHNOLOGY

JOINT IN EXTREME POSITION A (-5")

DRN		SCALE:	SHT OF
CHK		DWG SIZE A	NV-5-001-B
APPD			REV NO

REVISIONS			
LTR	DESCRIPTION	DRN	DATE

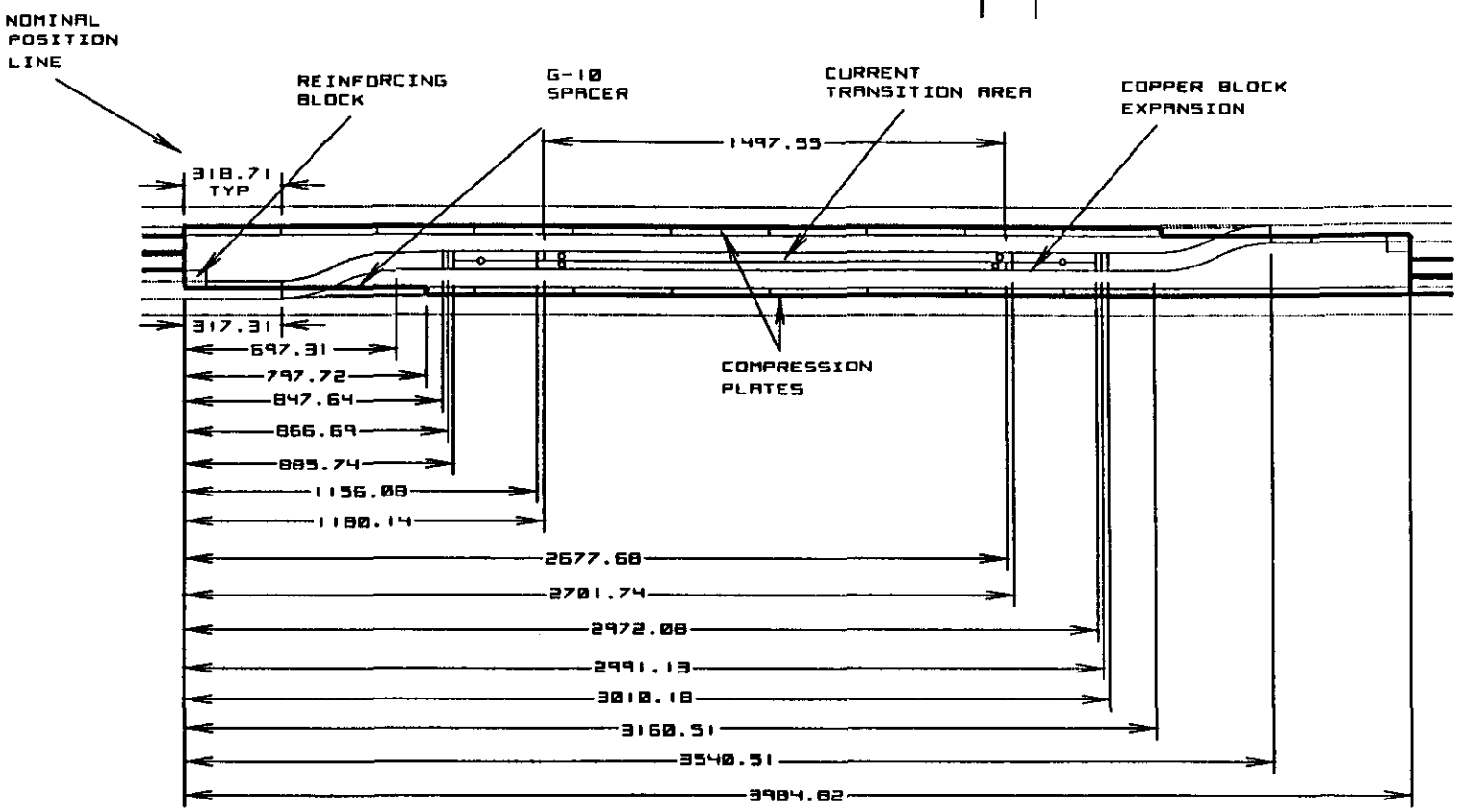

PRELIMINARY

MATERIAL	DIMENSIONS IN MILLIMETERS TOL UNLESS OTHERWISE SPECIFIED
FINISH	TOLERANCES +/- .20 MACHINE SURFACES 63
NEXT ASSY	
REMOVE ALL BURRS AND SHARP EDGES	

REF	PART NO	NO REQ	DESCRIPTION

PLASMA FUSION CENTER
MASS INSTITUTE OF TECHNOLOGY

JOINT IN EXTREME POSITION B (+5")

DRN		SCALE:	SHT	OF
CHK		DWG SIZE H	NV-5-001-C	REV NO
APPD				

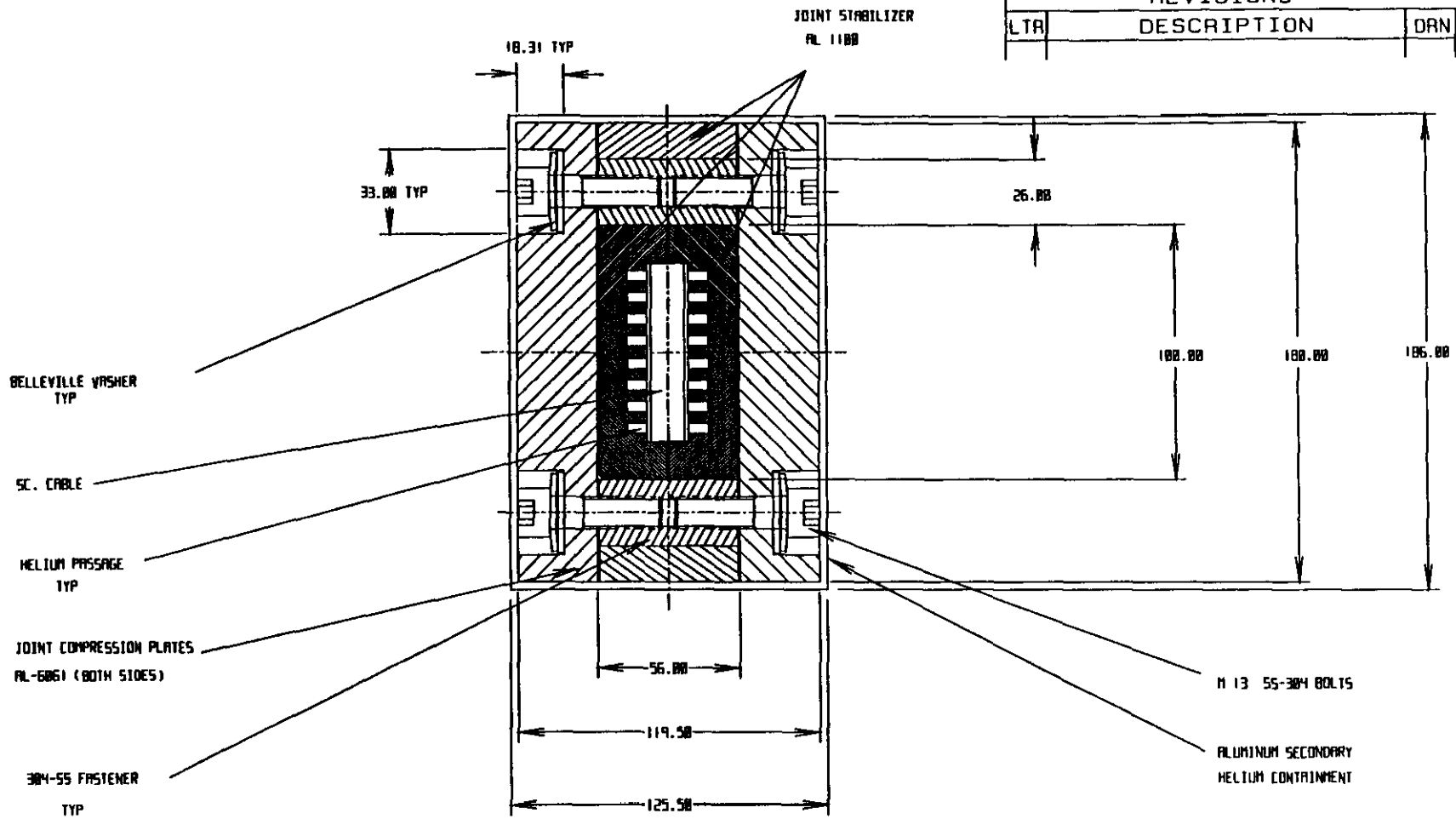

REVISIONS			
LTR	DESCRIPTION	DRN	DATE

REF	PART NO	NO REQ	DESCRIPTION

MATERIAL	DIMENSIONS IN MILLIMETERS TOL UNLESS OTHERWISE SPECIFIED
FINISH	TOLERANCES +/- .20 MACHINE SURFACES 63
NEXT ASSY	
REMOVE ALL BURRS AND SHARP EDGES	

PLASMA FUSION CENTER
MASS INSTITUTE OF TECHNOLOGY

JOINT CROSS SECTION

DRN		SCALE:	SHT OF
CHK		DWG SIZE A	NV-0-006	REV NO 0
APPD			

REVISIONS			
LTR	DESCRIPTION	DRN	DATE

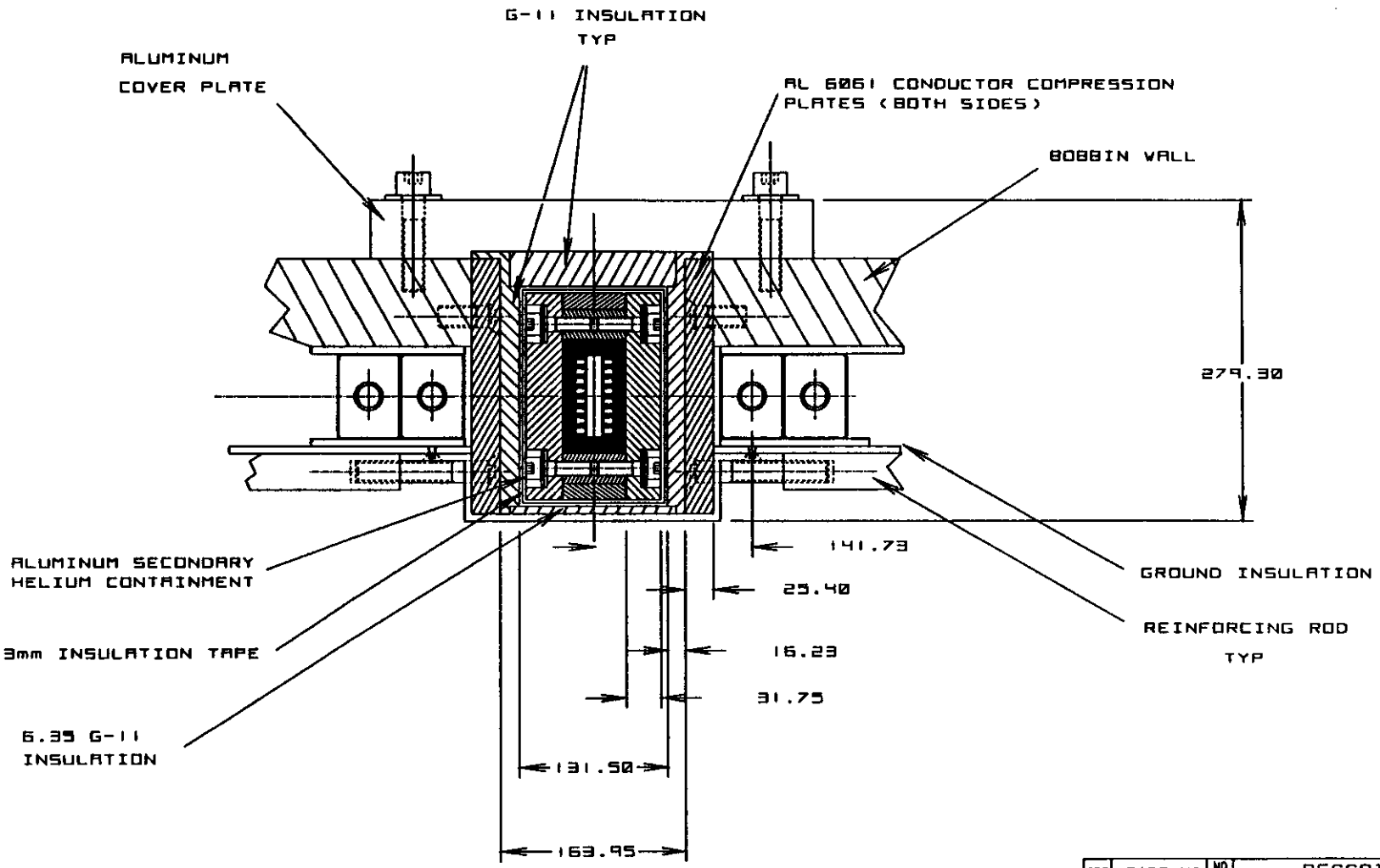

REF	PART NO	NO REQ	DESCRIPTION

MATERIAL	DIMENSIONS IN MILLIMETERS TOL UNLESS OTHERWISE SPECIFIED
FINISH	TOLERANCES +/- .20 MACHINE SURFACES 63
NEXT ASSY	
REMOVE ALL BURRS AND SHARP EDGES	

PLASMA FUSION CENTER
MASS INSTITUTE OF TECHNOLOGY

JOINT CROSS SECTION

DRN		SCALE:	SHT OF
CHK		DWG SIZE A	NV-00X
APPD			REV NO 0

REVISIONS			
LTR	DESCRIPTION	DRN	DATE

COIL & BOBBIN CROSS SECTIONS

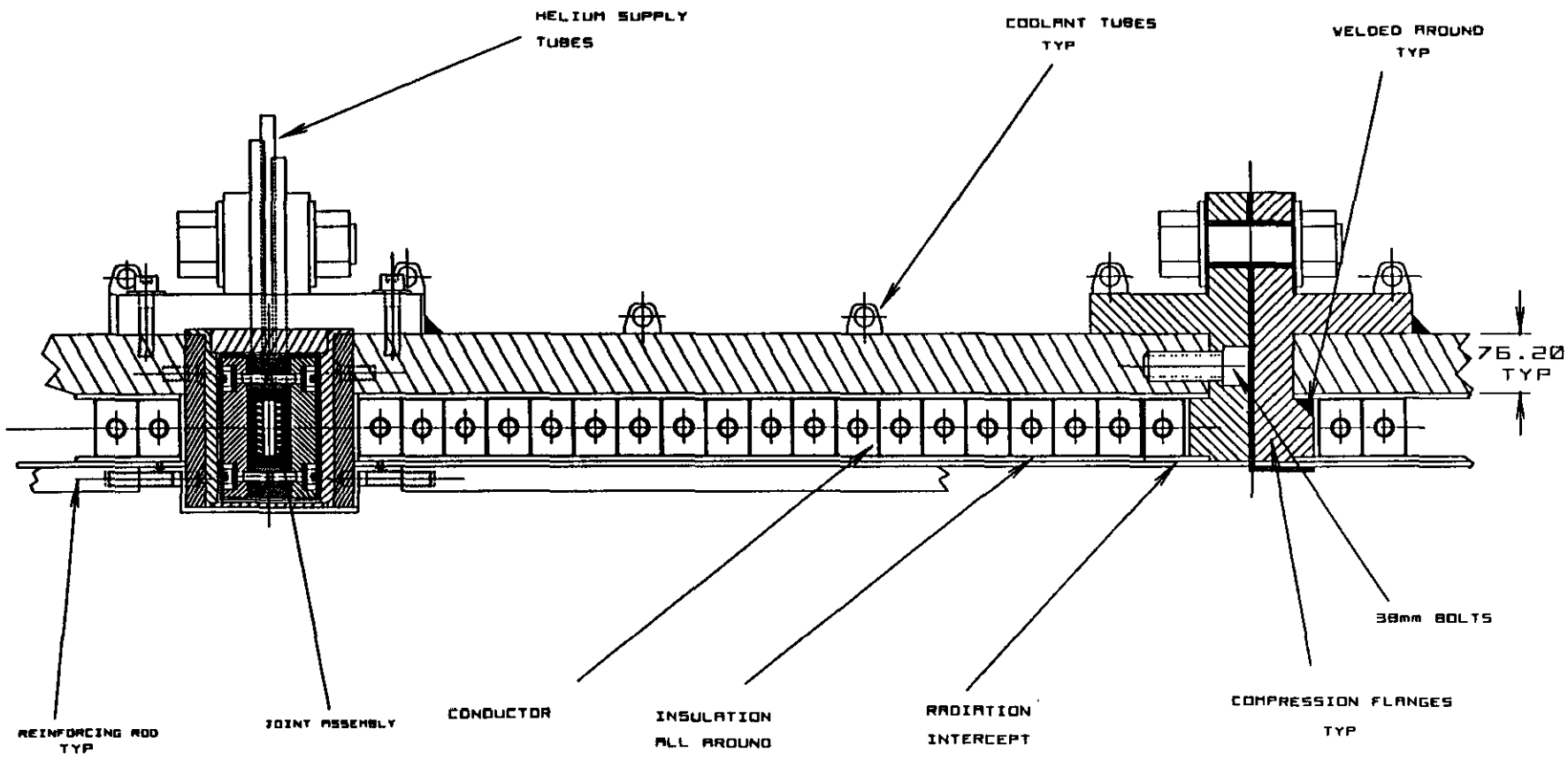

REF	PART NO	NO REQ	DESCRIPTION

MATERIAL

FINISH

NEXT ASSY

REMOVE ALL BURRS AND SHARP EDGES

DIMENSIONS IN MILLIMETERS
TOL UNLESS OTHERWISE SPECIFIED

TOLERANCES +/- .20
MACHINE SURFACES 63 ✓

PLASMA FUSION CENTER
MASS INSTITUTE OF TECHNOLOGY

COIL & BOBBIN CROSS SECTION

DRN
CHK
APPD

SCALE: 1 SHT OF

DWG SIZE A

NV-8-000

REV NO

LTR	REVISIONS DESCRIPTION	DAN DATE

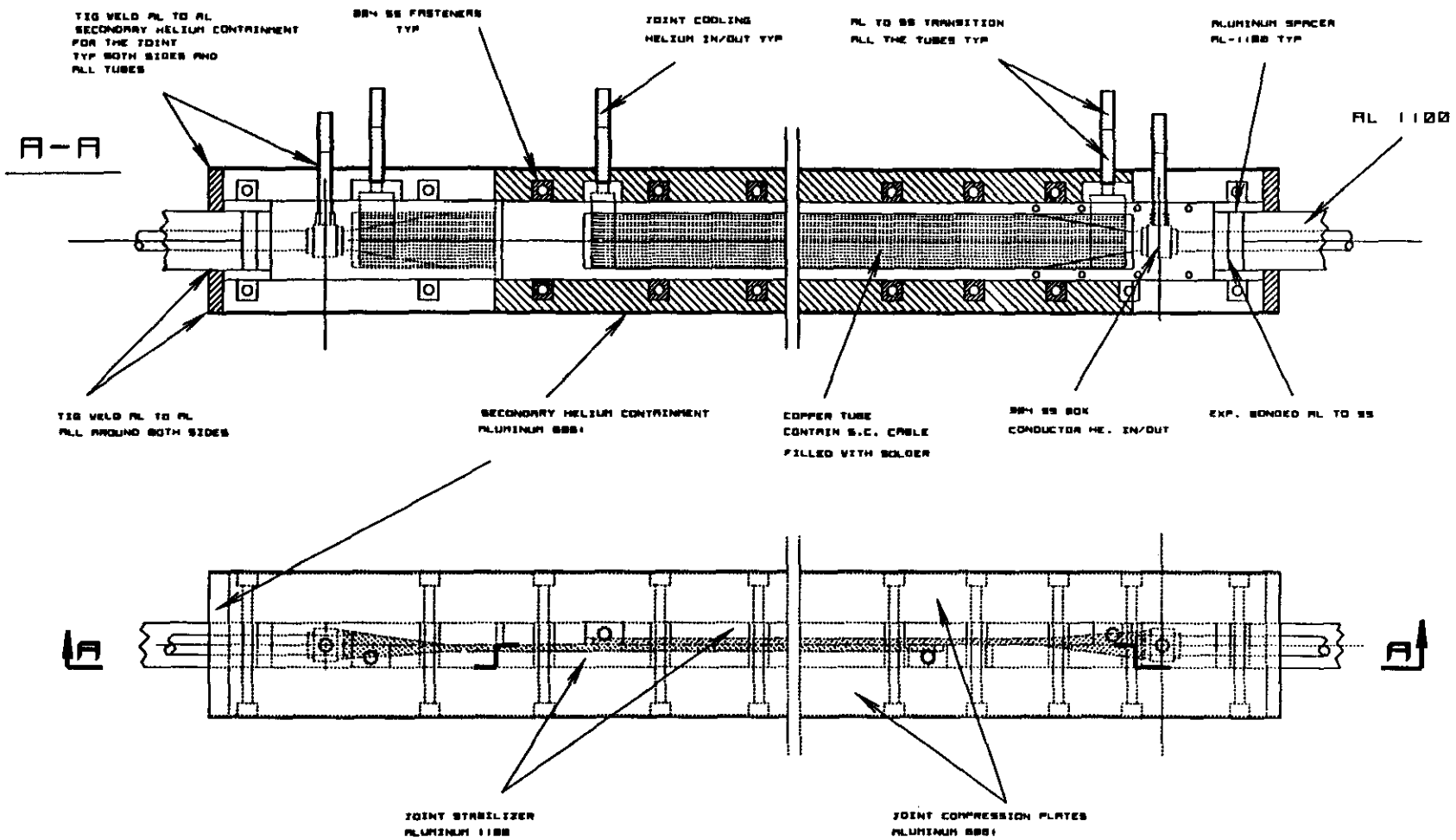

REV	PART NO	QTY	DESCRIPTION

PLASMA FUSION CENTER
MASS INSTITUTE OF TECHNOLOGY

GEM MAGNET JOINT

DRN
CHK
APPD

SCALE: SHT OF
SIZE HV-6071 REV NO

Table 1. Summary of the conditions and pertformance of sub-scale joints.

GSJ	Overall* Aspect Ratio	Core** Aspect Ratio	Core Cu-(Nb-Ti) Fraction	Blade Condition	Fabrication Difficulty Ranking	Resistance Ω (4.2 K, 18 kA)
I	4	11	90	pre-fluxed	2	4.9×10^{-10}
II	2.9	4.3	65	pre-fluxed	3	7×10^{-10}
III	4	11	90	pre-soldered	4	5.3×10^{-10}
IV	2.9	4.3	65	pre-fluxed	1^	4.3×10^{-10}
II' (II at 70% length)	2.9	4.3	65	pre-fluxed	3	7×10^{-10}

* Calculated based on exterior dimensions of the two blades soldered together.
** Calculated based on width and thickness of the sub-cables within one blade.
^ Most difficult.

Superconducting Super Collider

Conductor Verification Testing

Nicolai Martovetsky

SSC Laboratory
13 January, 1993

PURPOSES OF THE GEM CONDUCTOR EXPERIMENT

VERIFICATION OF THE CONDUCTOR PERFORMANCE AT FULL AND HIGHER CURRENTS

STABILITY TO EXTERNAL AND INTERNAL DISTURBANCES

SIMULATION OF STRESSES

INVESTIGATION OF THE NORMAL ZONE PROPAGATION

STUDY OF THE CURRENT TRANSFER TO THE SHEATH AT THE QUENCH

JOINT TEST

PRELIMINARY SPECIFICATIONS FOR THE CONDUCTOR TEST

OPERATION CURRENT	KA	50-100
MASS FLOW RATE THROUGH THE CONDUCTOR AND JOINTS	G/S	10-12
HEATERS FOR JOINT AND FOR CONDUCTOR	W/m WITH DURATION ~1S	300-400

<u>WHAT TO MEASURE AND MONITOR:</u>

1. MASS FLOW RATE
2. CURRENT
3. VOLTAGE ALONG THE CONDUCTOR
4. CURRENT IN THE CABLE AND CONDUIT WITH THE ROGOWSKI COILS DURING QUENCH
5. VOLTAGE ACROSS THE JOINTS
6. CRITICAL ENERGY FOR THE CONDUCTOR
7. JOINT TEMPERATURE RESPONSE TO HEATING AND MASS FLOW RATE

EXPERIMENTAL COIL SETUP

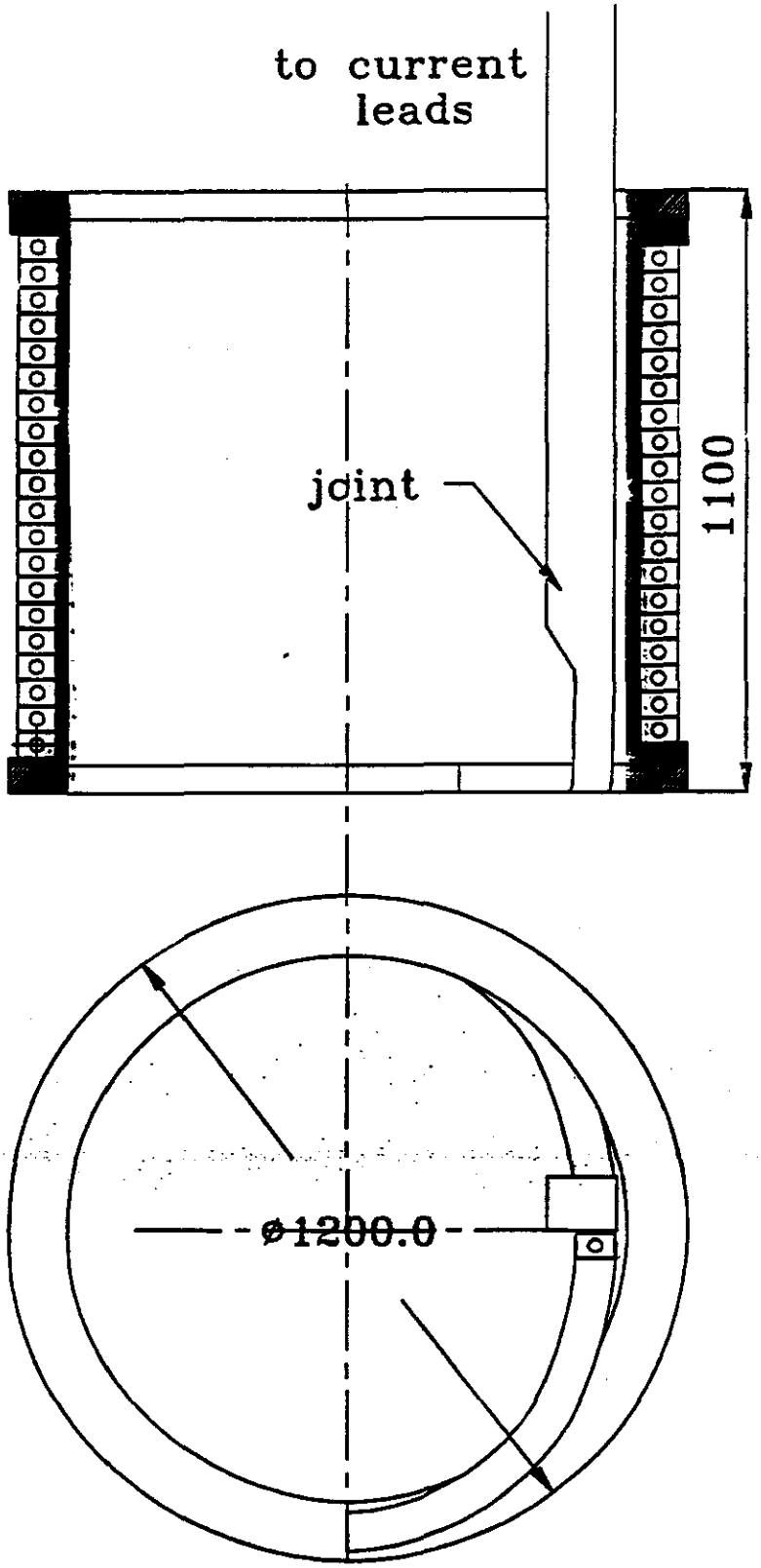

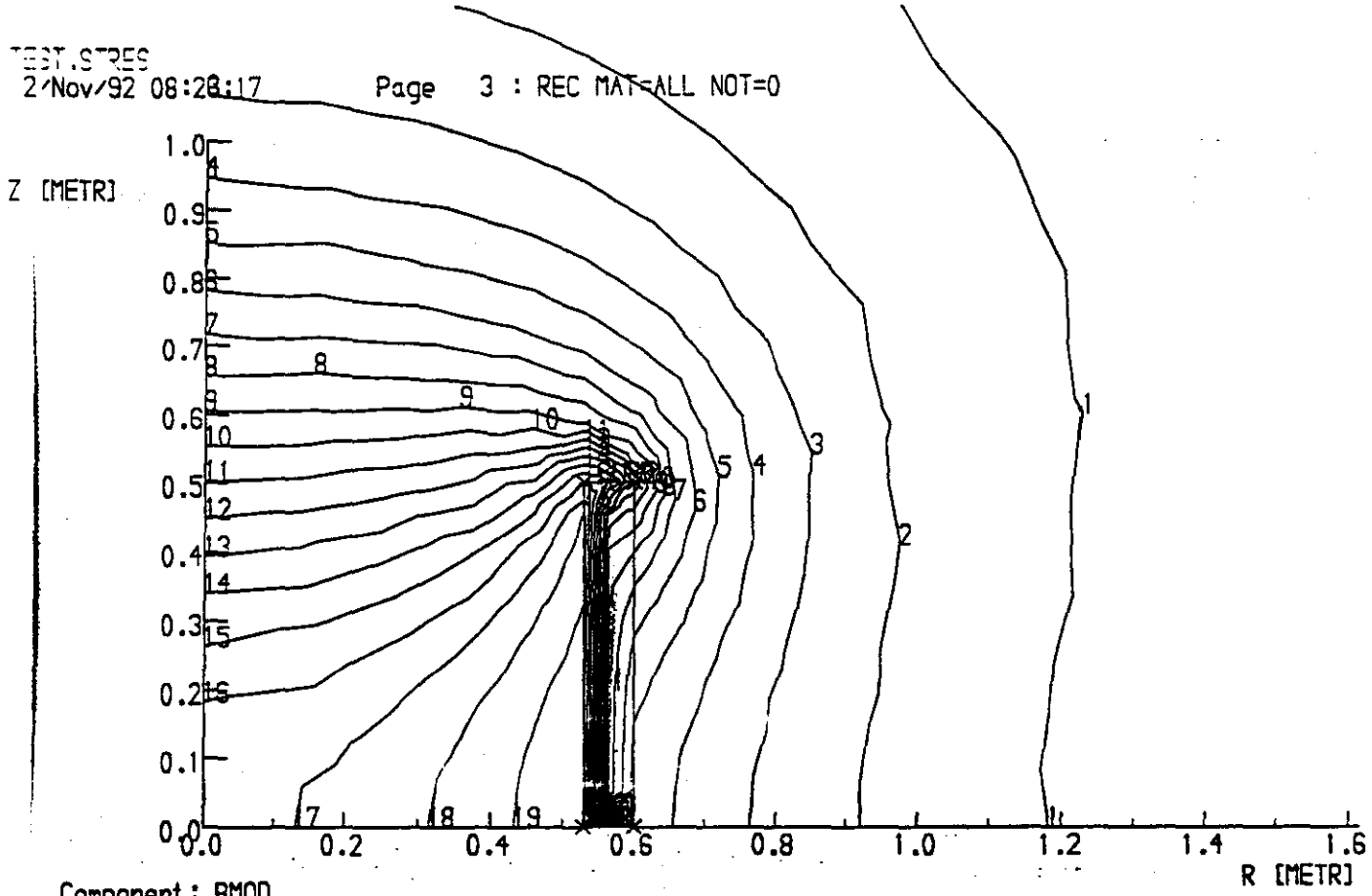

ELEM=QUAD SYMM=AXI SOLN=AXI SCALE=1.0 FIEL=MAGN
Static Solution Mesh 935 Elements 3 Regions

VF/PE2D.8

Ic vs B
and load lines for
GEM conductor test

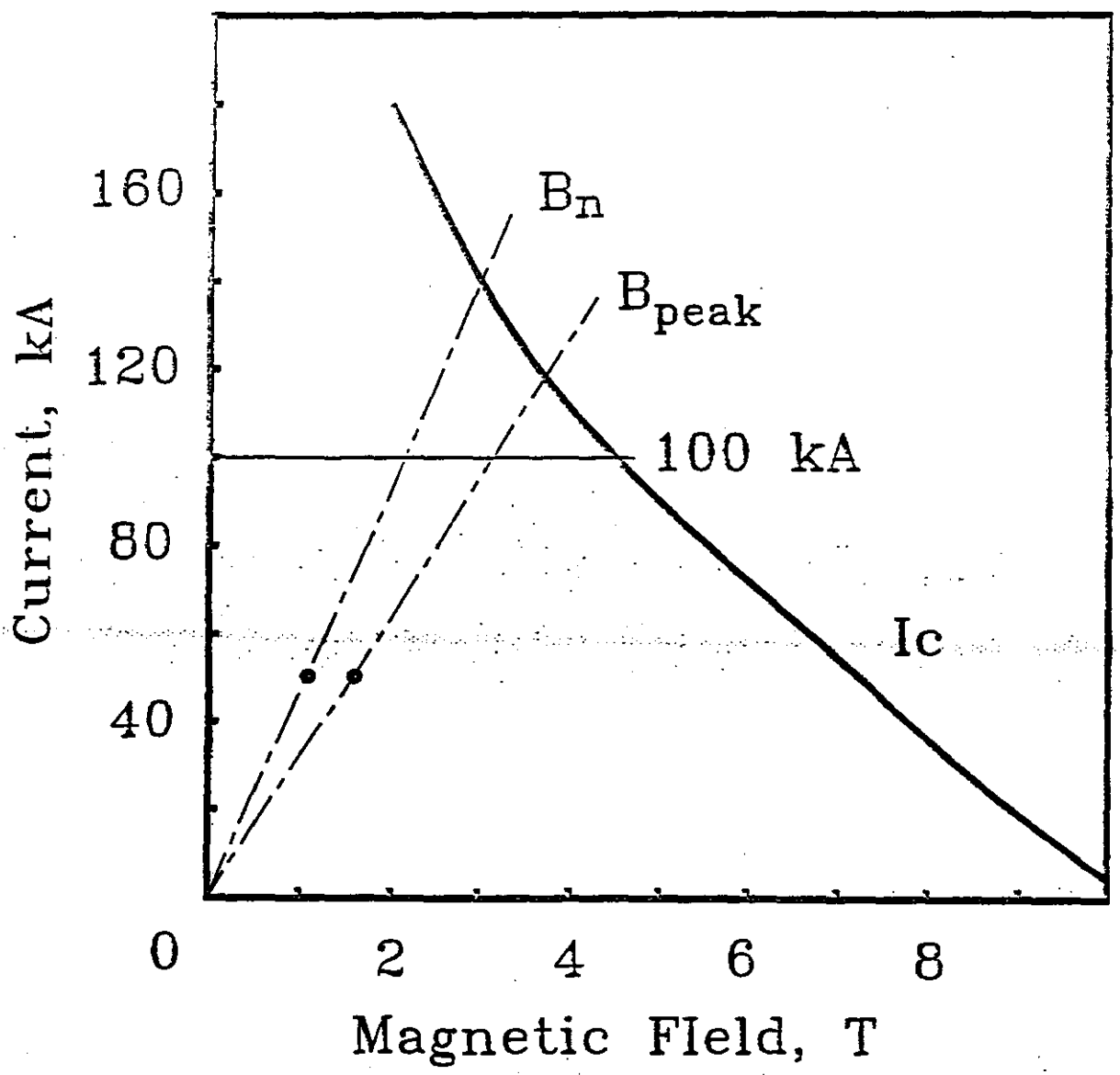

EXPERIMENTAL COIL FOR WISCONSIN FACILITY

HEIGHT - 1100 mm
DIAMETER - 1200 mm
Number Of Turns - 20
Conductor Length - 60 m
Inductance - 3.2×10^{-4} H

Parameter	at 50 kA	at 100 kA	in GEM
Stored Energy, kJ	400	1600	2.5e6
Max Hoop Stress, MPa	8	32	24.7
Compressive Axial Stress, MPa	1.33	5.3	5.7

What is available at UW

CURRENT SUPPLY 100 KA, 6 V, VOLTAGE DROP ACROSS THE BUSES - 3.7V AT 100 KA. RIPPLING - 0.5% AT $L=10^{-5}$ H

75 KA NOMINAL VAPOR COOLED LEADS, CAPABLE TO RUN AT 100 KA FOR 10-30 MIN

CRYOSTAT 1.5 M DIA CLEAR BORE, 2 M DEEP

DATA ACQUISITION SYSTEM - 24 CHANNELS SCANNING AT 100 KHZ PER CHANNEL AND 1 KHZ PER FRAME OF 24 CHANNELS;

CONTROL SYSTEMS FOR LIQUID HELIUM SUPPLY AND PUMPING RATES

INSTRUMENTATION WIRES - 125 PAIRS OF LOW LEVEL SIGNAL WIRES, 5 PAIRS OF 1-5 A CONTINUOUS WIRES;

COMPLETE SYSTEM FOR HELIUM SUPPLY AND RECOVERY

REFRIGERATOR 30 W AT 4.5 WITH POSSIBILITY OF SUPPLYING UP TO 6 G/S PRESSURIZED HELIUM (UP TO 10 ATA)

PULSED CURRENT SUPPLY FOR A HEATER (~500 J PER 10 ms)

CONDUCTOR TEST SCHEDULE

Test full scale SC joint	Feb 1, 93
Built hairpin sample:	
Strand (66 km)	Dec 14, 92
Cable (120 m)	Jan 27, 93
Pull into 60 m conduit	May 5
Sheath manufacture	March 30
Built test facility and Assemble test coil (60 m)	Oct 4,93
Complete conductor test	Dec. 14, 93

Superconducting Super Collider

Outline for Conductor Manufacturing Plan

Brad Smith
MIT/Plasma Fusion Center

13 January, 1993

Fabrication Overview

- Strand manufacture and associated testing
- Cabling and associated testing
- Cable encapsulation in stainless steel conduit to form cable-in-conduit (CIC)
- Al sheath manufacture
- Encapsulation of the CIC in Al sheath
- Termination (joint half) manufacture, assembly and test
- Supplying precise piece lengths with terminations attached
- Spooling and shipping finished conductor with terminations attached
- Cold testing conduit and joints at LN_2 temperature
- Final inspection and acceptance

MIT-PFC
1/13/93

General Guidance

- **Requirements on all aspects of conductor manufacture and test are contained in the Conductor Spec**
- **Proposal <=> requirements (compliance matrix)**
- **Manufacturing plan**
- **QA plan**

Strand Manufacture and Test

- **Billet fabrication technique**
- **QA/QC at each drawing stage**
- **Defect detection in at final strand size**
- **Heat treatment approach to meeting final RRR**
- **Spooling/shipping**
- **Schedule**

Cable Manufacture and Test

- Cabling machine description
- Assurances against subcable deformation at each stage
- Capacity/capacity upgrade requirements
- Assurances against broken strands
- Application of stainless steel tape
- Prototype cable fabrication
- Spooling/shipping
- Schedule

Conduit Manufacture, Cable Encapsulation and Test

- **Proposed method and prior experience**
- **Welding qualification program**
- **Weld inspection/repair**
- **Finished CIC testing**
  - Thermal cycling
  - RT pressure test to 250 bar
  - He leak test at 30 bar
  - RT N_2 pressure drop
  - Eddy current testing
- **Spooling/shipping**
- **Schedule**

Sheath Manufacture and Test

- Approach to sheath fabrication and line tooling description
- Tolerances on extruded cross-section
- QA/QC (incoming, on-line, post extrusion)
- Spooling/shipping
- Schedule

Assembly of CIC into Sheath

- **Line tooling description**
- **Weld qualification (if applicable)**
- **Weld cleanup (if applicable)**
- **Weld inspection and repair (if applicable)**
- **Spooling/shipping**
- **Schedule**

Fabrication of Terminations

- **Fabrication procedure**
  - Position/length control
  - Tube rolling
  - Soldering
  - Welding
- **Plan for technology transfer**
- **QA/QC on fabrication/procedures**
- **Conductor pressure drop measurement**
- **Prototype termination fabrication and schedule**
- **RRR measurements on components**
- **Leak checking/repair**

Assembled conductor

- Conductor cold leak test description
- Spool design (coordination of leak testing, shipping, coil winding)
- Shipping
- Schedule

Superconducting Super Collider

Magnet Engineering Status

Gary Deis

SSC Laboratory
13 January, 1993

GEM Magnet engineering status

The purposes of this talk are:

- to give you an update on the status of the design
- to identify several system-type issues we are currently working on
- to show what you can expect to receive from the present team when you come on board

I will discuss:

- overall status
- item-by-item details
- plan for design hand-off to contractor

gd1/13/93-2
1/13/93

We are addressing primarily schedule-critical design issues

We have frozen the top-level magnet parameters (magnetic field, diameters, length), and we are preparing to freeze FFS parameters.

- We have focused on critical-path components:
  - conductor
  - cold mass/winding (including tooling)
  - vacuum vessel
- We have also focused on "system" issues:
  - joint and VCL cooling approaches
  - coil form details
  - cryogenic system concepts
  - cold mass supports

gd1/13/93-3
1/13/93

Superconducting Super Collider Laboratory
2550 Beckleymeade Avenue, Mail Stop 2005
Dallas TX 75237-3946
(214) 708–6207
Fax: (214) 708-6088

GEM Project Department

Memorandum

To: Gary Sanders
From: Paul Reardon, Gary Deis, Ryszard Stroynowski, Bill Wisniewski
Subject: Magnet System Parameter Freeze
Date: October 30, 1992

The GEM Magnet Project has now reached the stage at which it is necessary to freeze the major system parameters of the coil assemblies. This is required to support the overall schedule which we are all committed to, which necessitates that the detailed design be advanced quickly in the next six months, and that major procurement actions be initiated immediately (we are already two months late). At least one of these procurements, the conductor purchase, will be firm fixed price and will be awarded early next year, so any design changes which would affect the conductor specifications in any way must be strictly avoided.

The Magnet Project recommends an immediate freeze of the following magnet parameters:

Magnet System Parameter	Value	Unit
Magnet subsystem inner radius	9.0	m
Magnetic field at IP	0.8	T
Vacuum vessel minimum z	0.4	m
Vacuum vessel maximum z	15.5	m
Winding mean radius	9.5	m
Cold mass minimum z	0.75	m
Cold mass maximum z	15.0	m

Freezing these system parameters will result in a freeze of many other derived parameters, such as number of turns, current, conductor cross section, etc. Many other parameters relating to the detailed design of the coil assemblies will be frozen as the design progresses.

The magnet project would also like to freeze the design of the FFS now. However, in view of the ongoing discussions related to the designs of the tracker, calorimeters, and muon system, together with the slightly less critical schedule for the FFS design and construction, we do not request that the design be frozen at this time. However, please note that uncertainty in the design of the FFS will impede our ongoing discussions with potential US and foreign suppliers of these components, so an early freeze will be required. We anticipate requesting this freeze in forty-five days.

The details of the magnet interfaces with the Central Detector Support, the Muon Subsystem, and the facility, as well as the interface between the FFS and the coil assemblies are being evolved as a normal part of the detailed design process. These details should not affect the magnet design in a significant "system" manner (as would changes in the parameters listed above), and we will continue to work with the other systems to develop the details as a part of our design effort.

Freezing of the major magnet system parameters, now, is essential to get the magnet project back on schedule, to minimize the overall cost, to maintain project momentum, and to demonstrate the GEM Collaboration's ability to manage their activities in a manner consistent with their schedule commitments. Would you please present this issue to the executive committee for their formal approval at the November 4-6 Collaboration Meeting?

Cold Mass Engineering Summary

The cold mass design is rapidly being specified in detail. Verification tests are in progress or planned for critical areas:

- Conductor design - test design in progress, to be run within 12 months
- Joint design - initial subscale tests successfully completed, full-scale tests to be conducted in February
- Coil form design - planning for prototype, including tooling, in progress. Goal is to complete one by September.
- Winding design - initial bending tests completed. Two full-scale turns in progress, due for completion within 2 months. Planning and design in progress for 19-turn prototype (using dummy conductor), to be wound in October-December 1993

gd1/13/93-4
1/13/93

Cold mass design - open issues

There are two system-type issues which are currently under discussion. Both will be decided prior to contract award.

- Should the coil form be azimuthally continuous (conductive)?
  Present baseline design is discontinuous.
  Advantages: lower eddy-current heating during charge and discharge, faster charge/discharge, improved availability
  Disadvantages: less protection during quench, heating in attached components, additional complexity
- How should joints be cooled: forced (supercritical), or thermosyphon helium system?
  Present baseline design is forced-flow
  Advantages: good control of joint cooling, flexibility of joint location
  Disadvantages: lower reliability, limited mass flow available

GEM Magnet cryogenic helium system

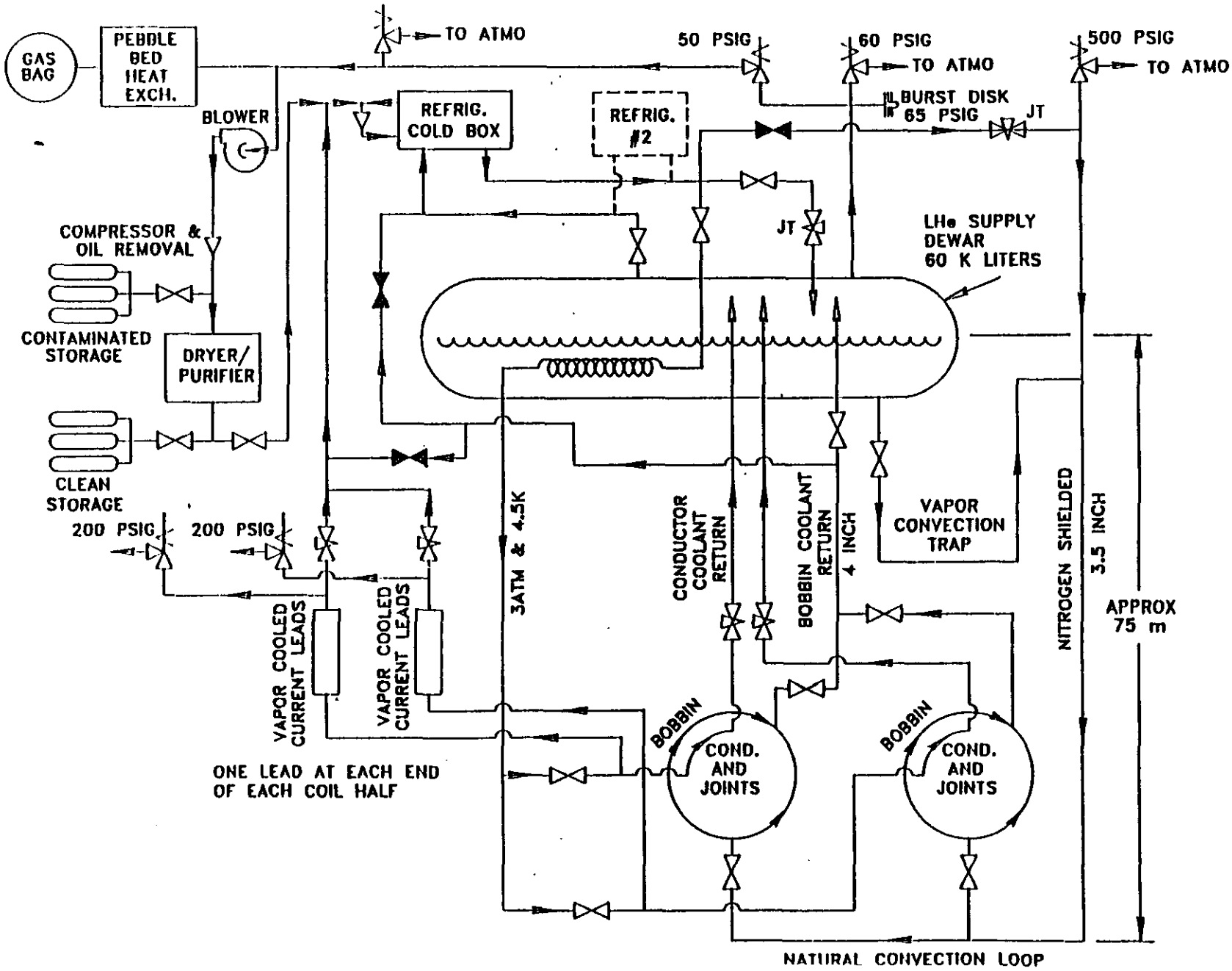

Vacuum vessel engineering

There have been no major changes as the design has evolved since the August briefing.

- details of the interface with the muon subsystem are changing, so as to reduce the stability requirement on the magnet

There is one major system issue under consideration: material choice

- present design uses low carbon steel for all axisymmetric parts and for vessel legs, and 304L for the longerons
- design drivers: cost, fracture failure in cryogenic spill, magnetic effect, fabrication/availability considerations

We will determine the specific requirements prior to contract award

gem γeμ

gd1/13/93-6
1/13/93

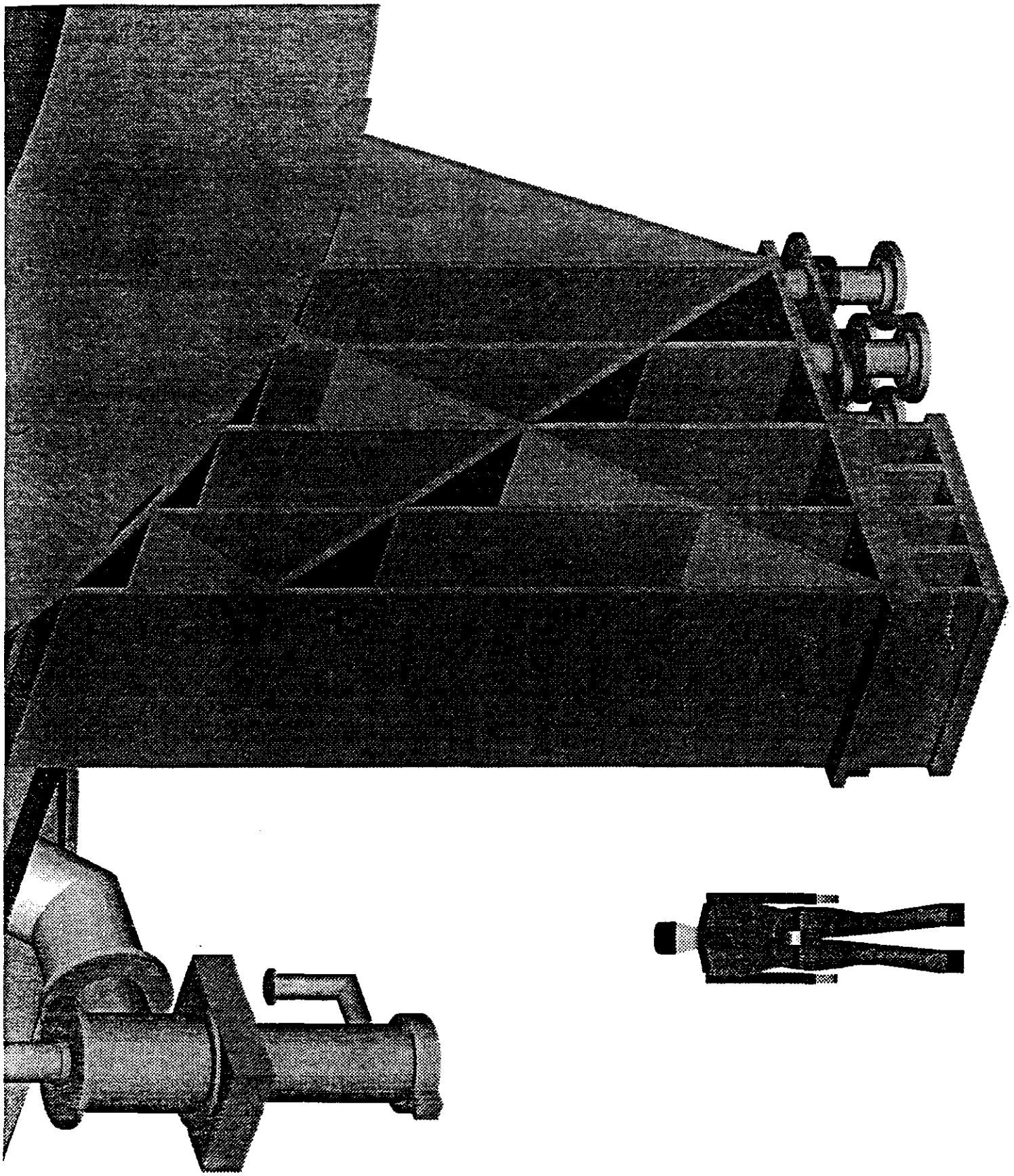

Thermal shields, cold mass supports, internal cryogenics, vapor-cooled leads

The "preliminary design" was reviewed in December, and design basis documents are in preparation. There are few changes in design concepts.

- Thermal shields - Choice of LN cooling approach (forced, flooded, or thermosyphon) is open.
- Cold mass supports - Axial rods may be replaced by "axial flexures," as described in TN-92-116/A. For proposal purposes, use axial rods descibed in AAA92-102667 and 668
- Internal cryogenics - Initial layout of plumbing completed. Significant work still ahead. Open issues on joint and VCL cooling methods.
- Vapor-cooled leads - first layout of internal bussing is complete. Open issue on cooling method (forced or thermosyphon system).

Baseline axial cold mass support (from AAA92-102688-00)

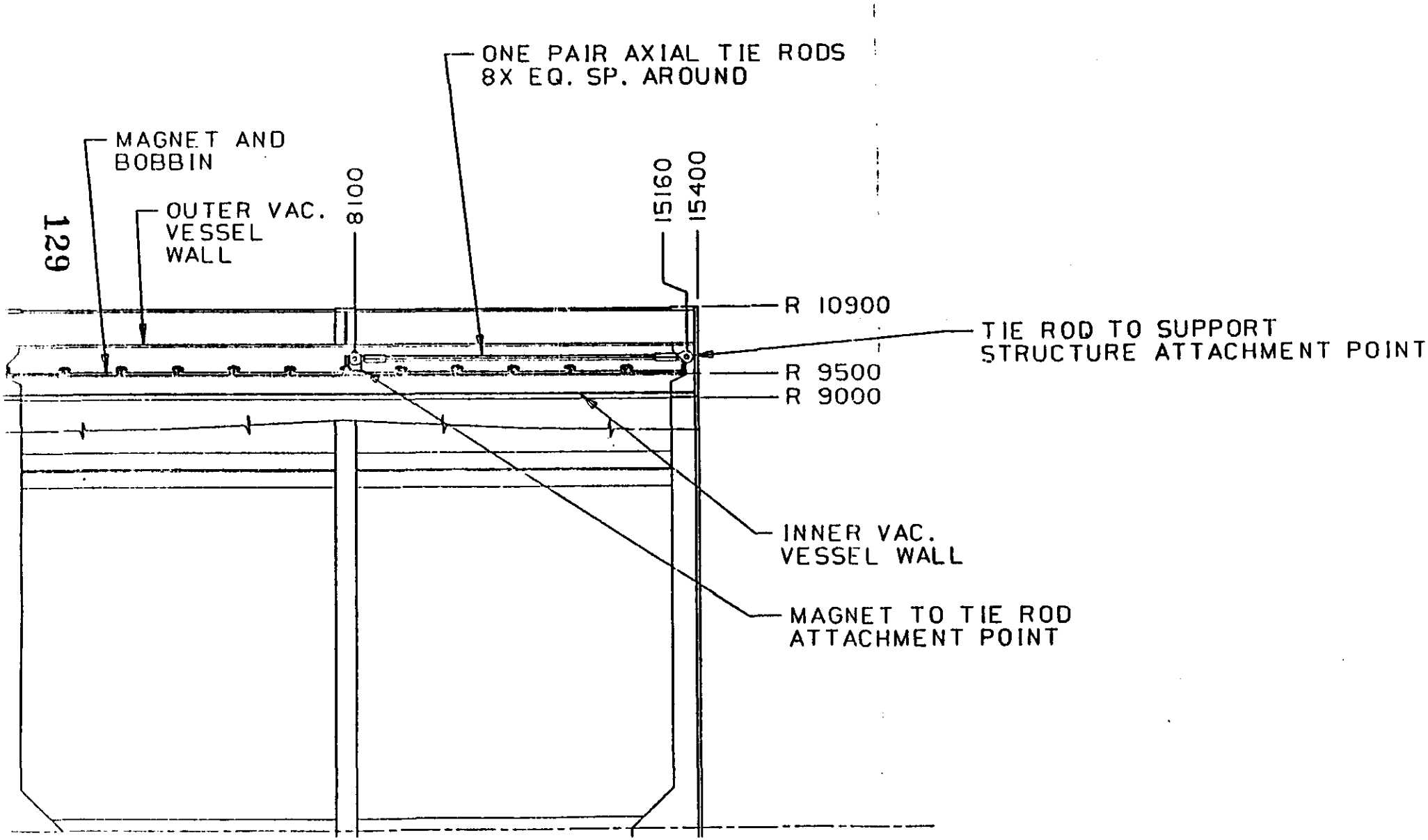

Alternate axial cold mass support - not to be used for proposals (from TN-92-116/A)

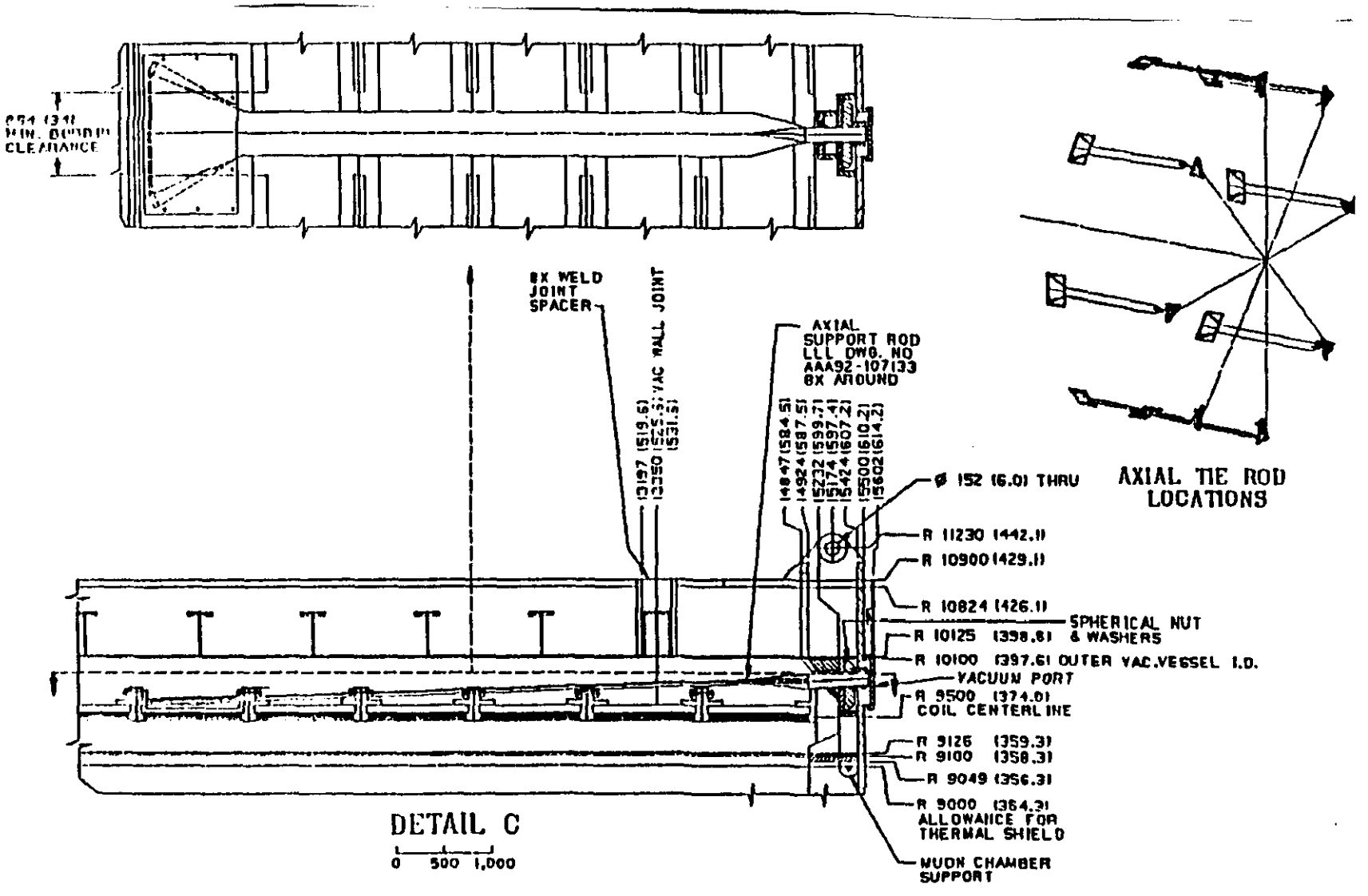

Forward field shaper and central detector support

These items are not a part of this procurement. Drawings included in the RFP package are intended to provide background on interfaces

- FFS and CDS designs are changing, but this will have only minor effect on the magnet.
- Features which do effect interfaces with the magnet will be frozen prior to contract award

A

Central detector support interface

The CDS is intended to be "free-standing", to allow independent alignment. However, it also needs lateral support. The present design is a compromise.

- Axial magnet forces are supported by compression columns, which go through the CDS, without touching it. Columns extend from one magnet end ring to the other (0.8m long)

- This leaves the CDS as a completely independent structure, which is aligned separately from the magnet

- <u>Following alignment</u> the CDS is "wedged" in place against the two magnet halves, to improve its stability

gem γeμ

gd1/13/93-15
1/13/93

Axial Magnetic Load Paths

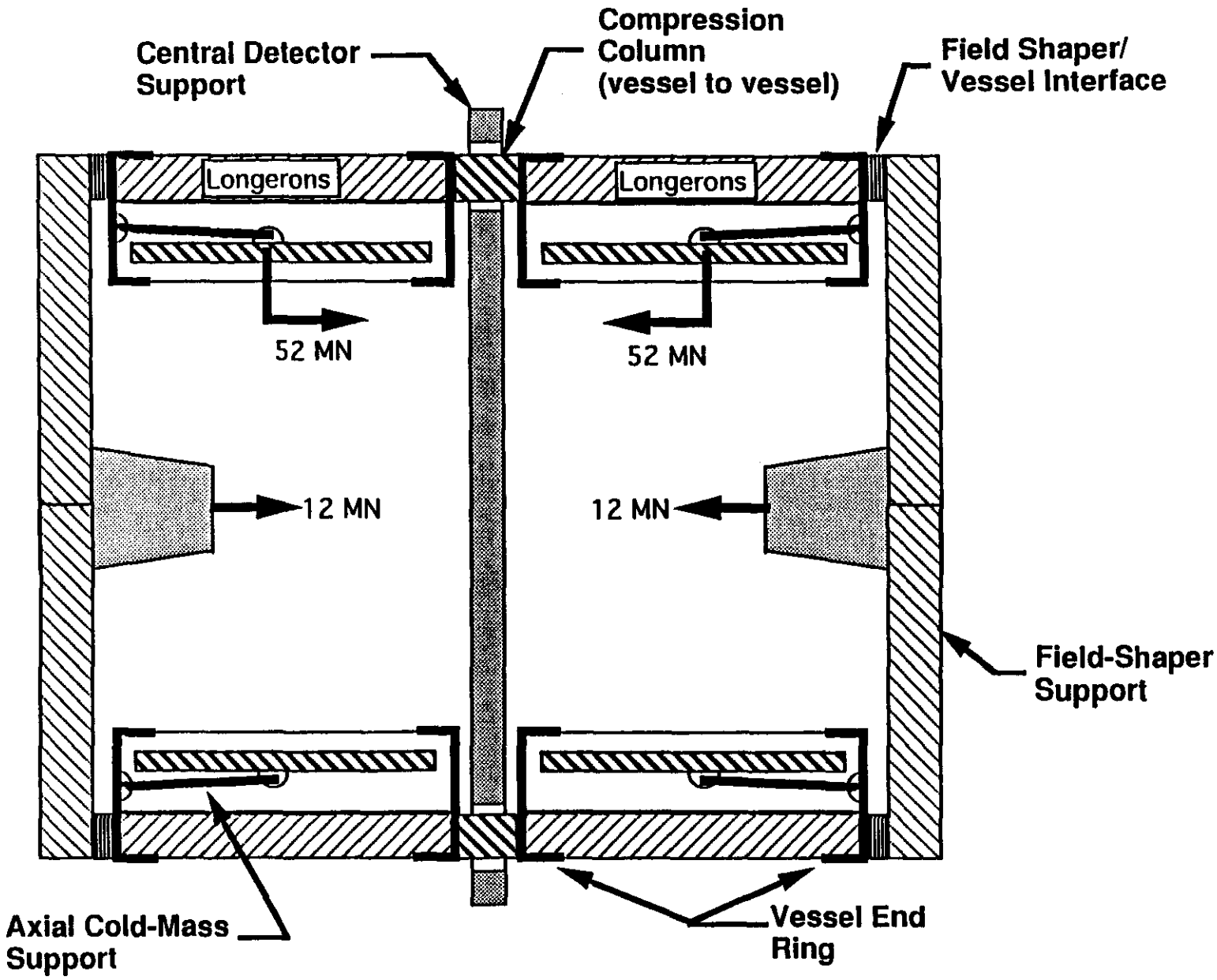

CENTRAL DETECTOR SUPPORT

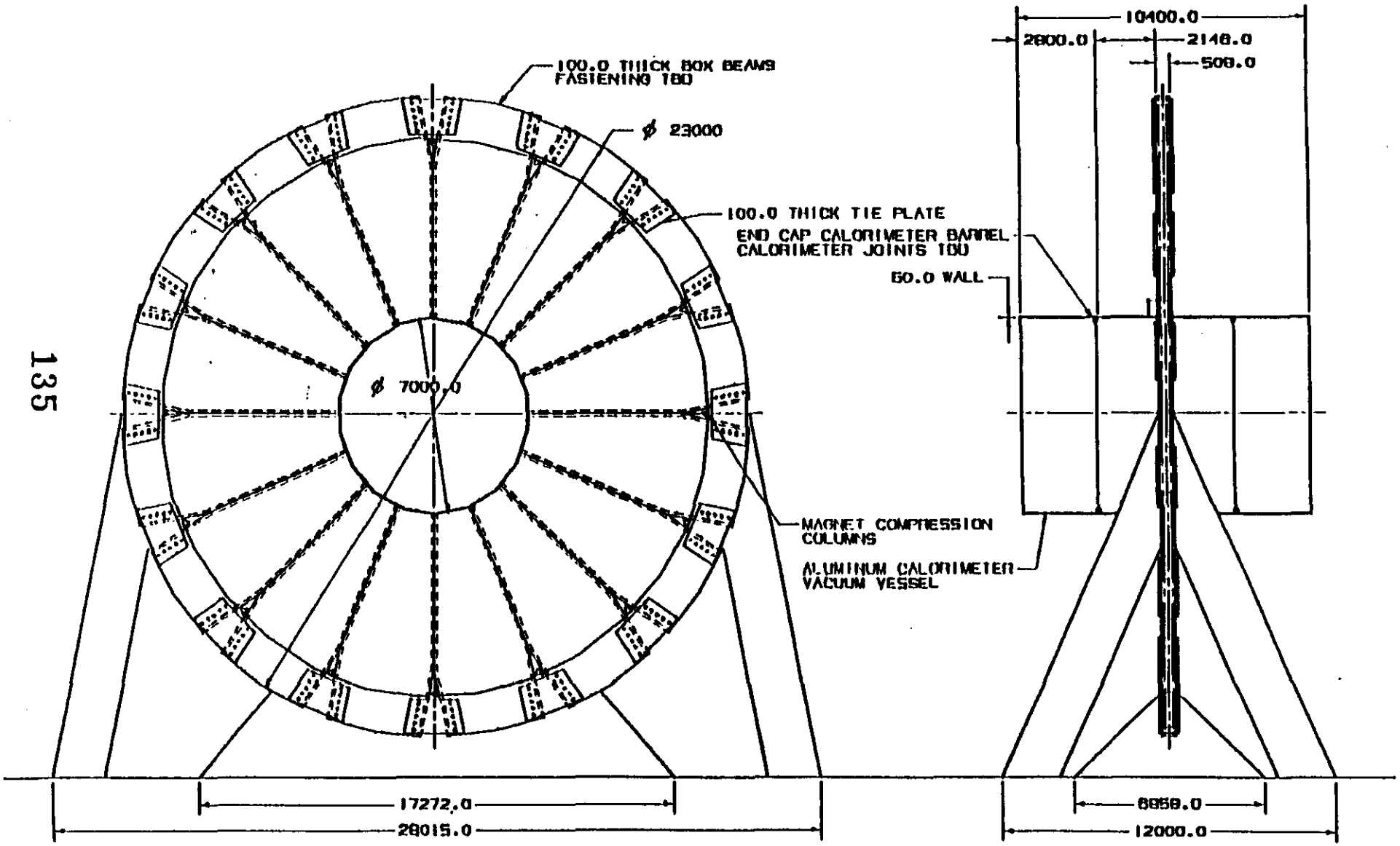

Auxiliary systems

Early preliminary design is proceeding. Primary issues are:

- Power/protection - warm current busses: air- or water-cooled?
- Cryogenics - conductor joint and VCL cooling methods? Should we use a local thermosyphon dewar, or use the surface dewar?
- Vacuum system - scoping efforts only

We are planning for an efficient hand-off of design information after contract award

For each major hardware item (vacuum vessel, thermal shields, cold mass supports, etc.), we will:

- Conduct a "preliminary design review" to ensure that the design is proceeding in an appropriate direction
- Prepare a "Design Basis Document," including (to varying degree):
  - design element scope
  - applicable documents - specs, drawings, reports
  - design requirements - performance and interface
  - design description - text, pictures, drawings, details, block diagrams, parts lists, fab and QA approaches, etc.
  - analysis - summaries of and pointers to documentation on all completed analyses
  - cost and schedule basis

gem γeμ

gd1/13/93-12
1/13/93

Summary

- We are continuing to refine the magnet design, focusing on schedule-critical, and "system" issues
- To date, there have been no design changes which would be significant to this procurement
- We are planning for an efficient design hand-off when the contract is awarded

Superconducting Super Collider
GEM Detector

Review of IR5 Site Fabrication Facilities

Lawrence "Buzz" Pedrotti
Lawrence Livermore National Laboratory

13 January, 1993
Preproposal and Technology Exchange Meeting
SSC Laboratory

VG-GEM-92-010-1
6/20/92

Outline

In this talk, I will present:

- A Brief Overview of the IR5 Site
- The Outdoor Assembly area (Hardstand)
- The South Assembly Building
- The North Assembly Building

Purpose of the IR5 Surface Facilities

- Complete Subassembly Erection
  - Vacuum Vessel
  - Forward Field Shaper
  - Central Detector Support
- Wind Coil Segments
- Assemble Magnet Components
- Test Magnets
- Prepare for Installation into Experimental Hall

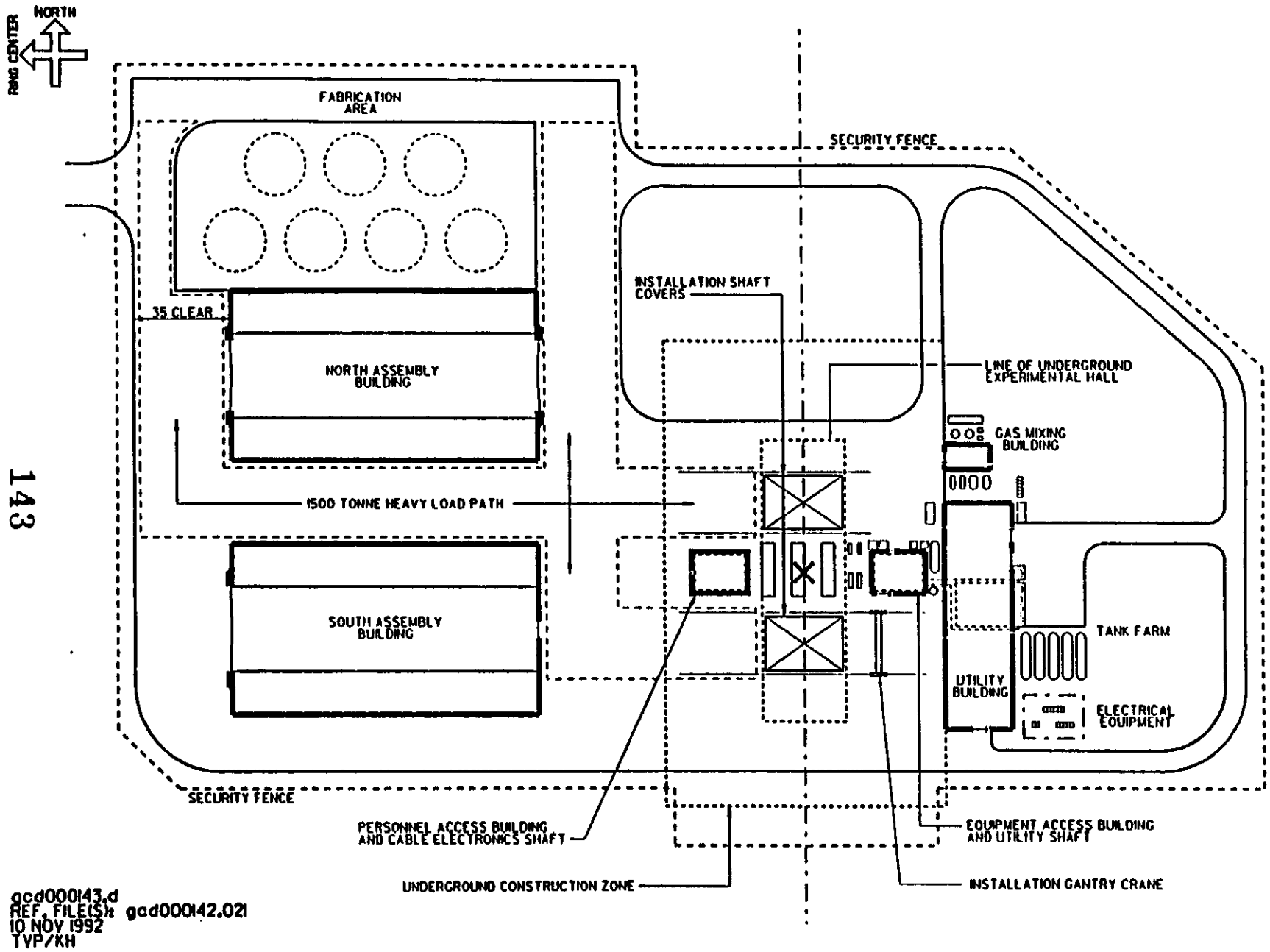

gcd000143.d
REF. FILE(S): gcd000142.021
10 NOV 1992
TVP/KH

IR-5 Site Plan

A Snapshot of the IR5 Site

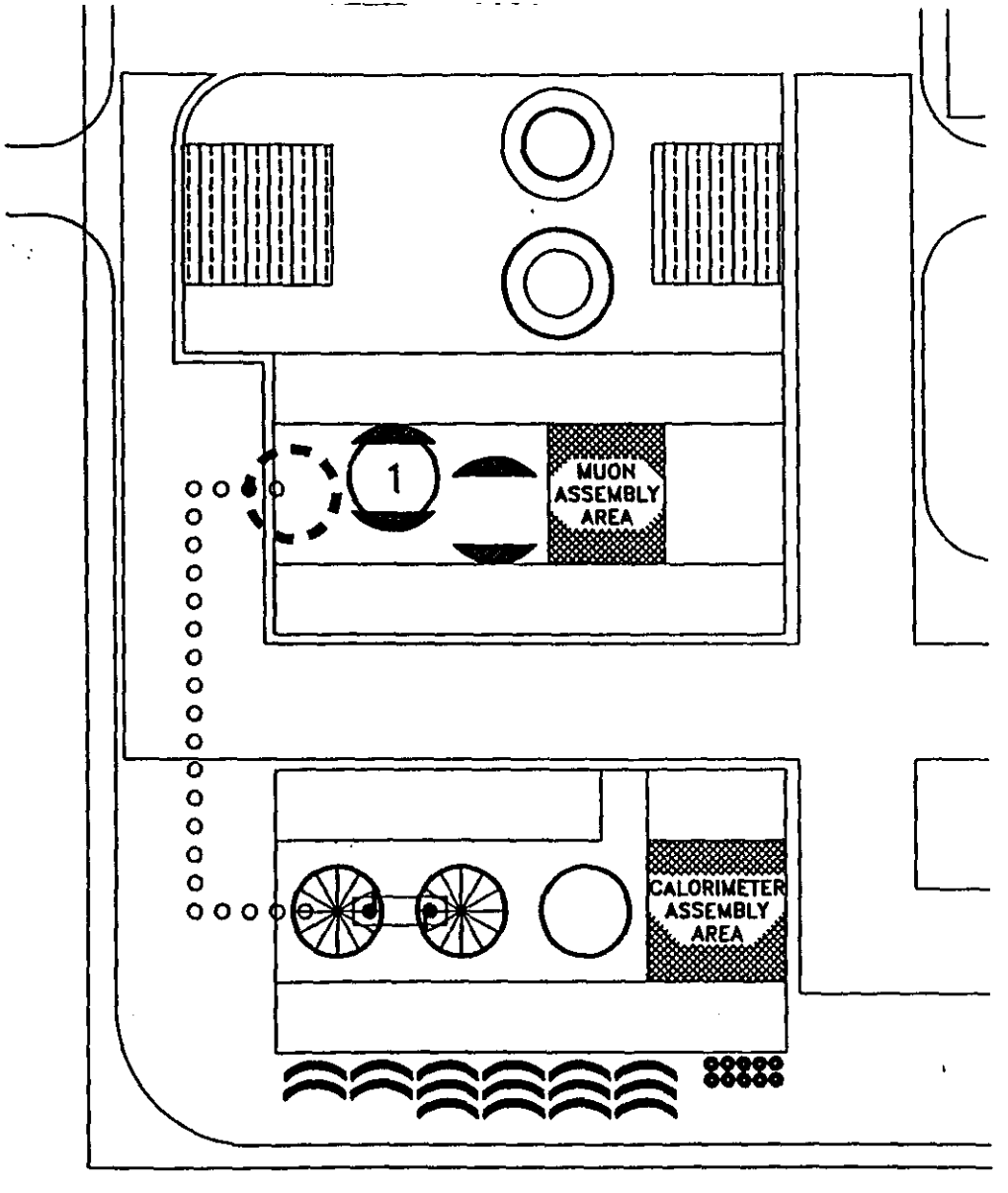

VG-GEM-92-010-3
6/20/92

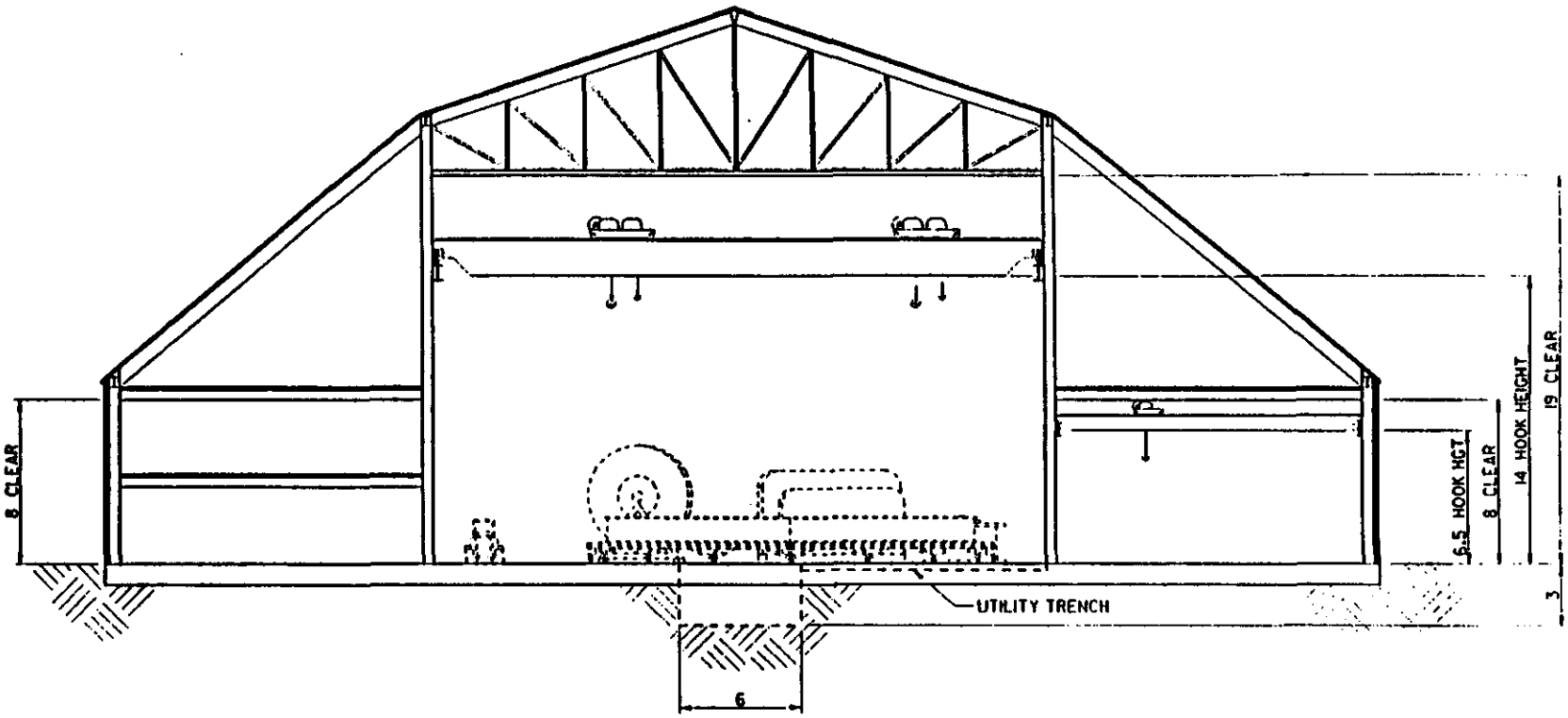

gcd000202.b
REF: gcd000237
11-11-92
H HAZLETT

SECTION A-A

South Assembly Building Section

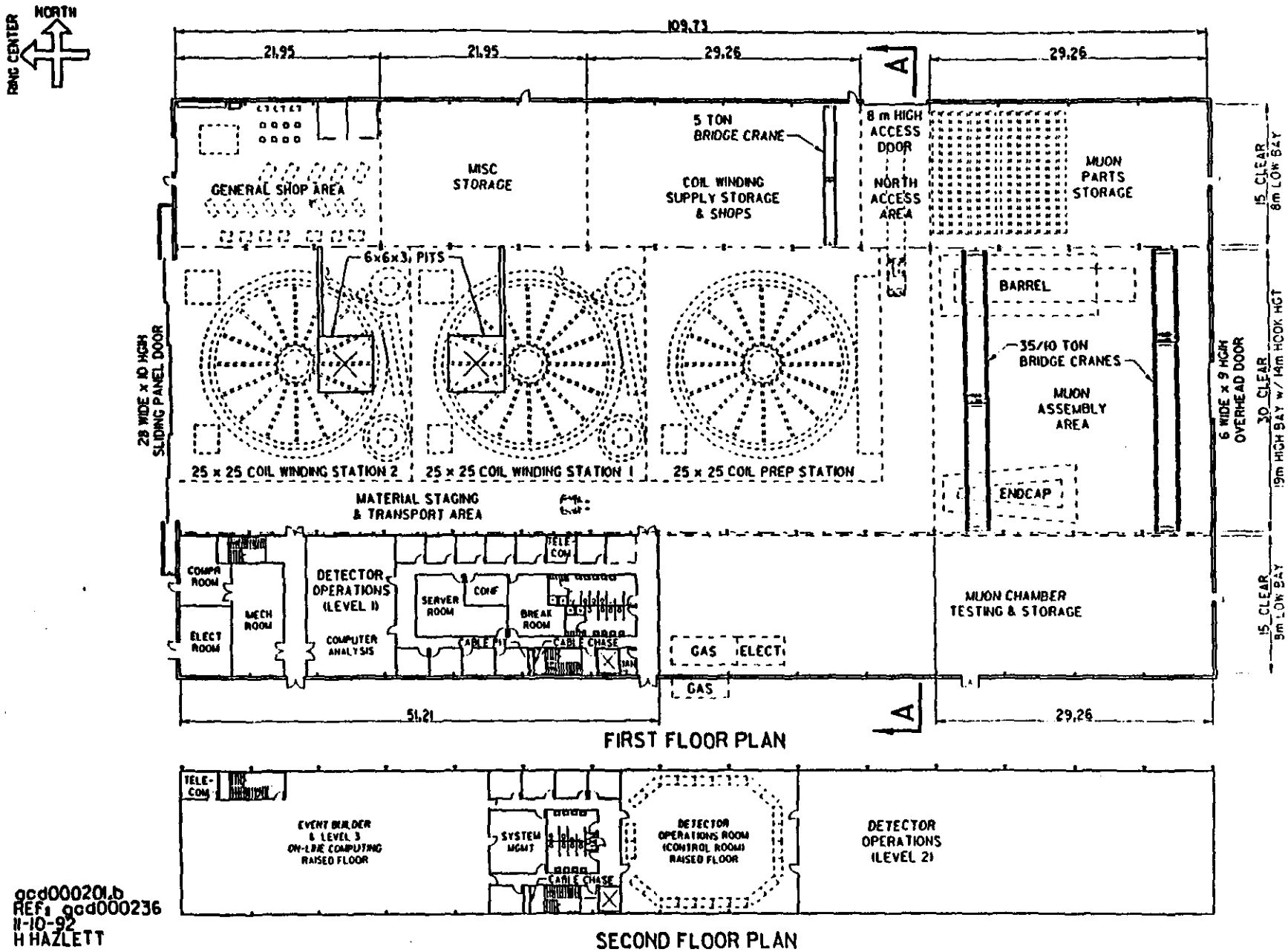

gcd000201.b
REF: gcd000236
11-10-92
H HAZLETT

South Assembly Building Floor Plan

Purpose of Coil Assembly

- Place components in the final position in the vessel
- Carry out verification tests at ground level
- Prepare for installation into the experimental hall

Assembly requirements

General
- Safe
- Predictable and verifiable
- Within state-of-the-art

Vacuum
- Leak-rate
- Cleanliness
- Final test prior to installation in experimental hall

Facility Constraints
- IR5 site facilities
- Vessel fabrication on hardstand
- High-lifts must be outside

Schedule
- Defined by overall detector schedule (Mag. Proj. Sch. Rev. 6)
- On critical path
- Approximately two years duration

VG-GEM-92-010-6

Components to be assembled

- An annular 940 ton vacuum vessel (cryostat)
- 12 - 45 ton coil segments including sensors
- 32 - 1.5 ton thermal shields, and LN piping
- 16 - 7 m axial support rods, thermal shunts and sensors
- 32 - 10 cm x 4m radial support rods, thermal shunts and sensors
- 2 - Vapor cooled leads and sensors
- 4 - He and circuits including:
  - manifolds
  - flow-control valves for joints
  - flowmeters
  - temperature sensors
  - insulating breaks

NOTES
UNLESS OTHERWISE SPECIFIED:

1. ALL DIMENSIONS ARE IN INCHES.
2. DIMENSIONING AND TOLERANCING PER ANSI Y14.5M-1982.
3. SURFACE TEXTURE PER ANSI B46.1-1978.

Components to be assembled

An annular 940 ton vacuum vessel

12–44 ton coil segments including sensors

32–1.5 ton thermal shields, and LN piping

16–10cm x 7m axial support rods, thermal shunts and sensors

32–10cm x 4m radial support rods, thermal shunts and sensors

2– Vapor cooled leads and sensors

4– LHe circuits including:
- distribution piping
- flow-control valves for joints
- flowmeters
- temperature sensors
- insulating breaks

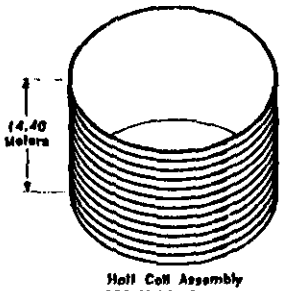

Hall Coil Assembly
520 Metric Tonnes

1. Lift from below on special locking fixture
2. Slide new segment under
3. Bolt bobbins
4. Make conductor joint
5. Install voltage taps, etc (Repeat 12 times...)
6. Certify ready for assembly
7. Secure for movement
8. Protect from weather

Step 1

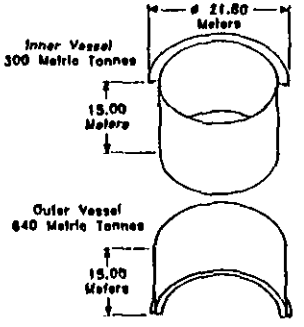

1. Erect vessels with axes vertical
2. Weld demountable joint and leak hunt
3. Acceptance test
4. Disassemble
5. Certify for rigging

Step 2

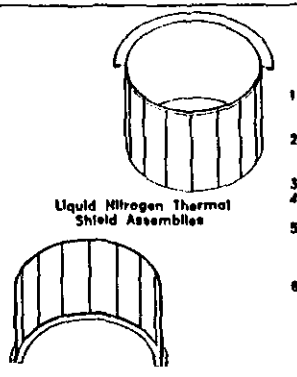

1. The LN panels will be cold certified at the factory
2. Mount the panels on the inner and outer vessel shells
3. Install LN plumbing
4. Leak hunt the assemblies
5. *Optional – close the vessels and cold shock the assembly
6. Certify ready for assembly

Step 3

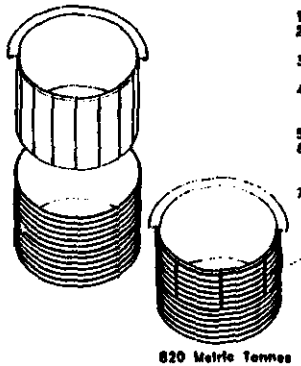

820 Metric Tonnes

1. Certify for assembly
2. Move to assembly pad
3. Rigging readiness review
4. Lift inner vessel into the coil hall (≈ 10cm clearance)
5. Move back inside
6. Install & tension upper radial and axial rods
7. Install inner LHe piping & sensors

Step 4

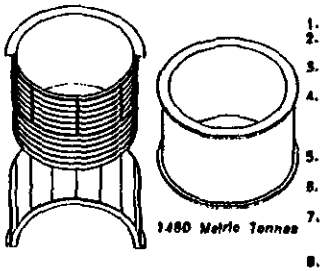

1480 Metric Tonnes

1. Certify for assembly
2. Move to assembly pad
3. Rigging readiness review
4. Lift inner assy. into the outer vessel (≈ 10 cm clearance)
5. Move assembly inside
6. Install & tension lower radial rods
7. Install remaining LHe piping & sensors
8. Weld final closure welds

Step 5

1. Install temporary cold mass supports
2. Move to the assembly pad
3. Rigging readiness review
4. Upright the magnet
5. Inspect
6. Leak hunt
7. Cold test
8. Prepare for installation

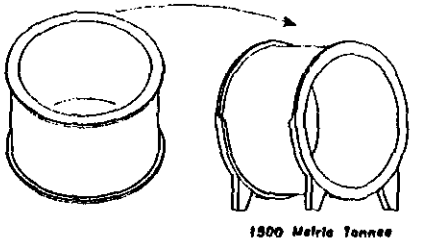

1500 Metric Tonnes

Step 6

150

DWN			
CHK			
APVD			
TRACEABILITY			
	LAWRENCE LIVERMORE NATIONAL LABORATORY MECHANICAL ENGINEERING DIV. UNIVERSITY OF CALIFORNIA		

CLASSIFICATION

THIS DOCUMENT IS THE PROPERTY OF THE UNIVERSITY OF CALIFORNIA LAWRENCE LIVERMORE LABORATORY REPRODUCTION PROHIBITED WITHOUT PERMISSION OF THE MECHANICAL ENGINEERING DEPARTMENT

PROJECT: GEM

TITLE: AXIS VERTICAL ASSY SCHEMATIC

DRAWING NO: AAA92-102733-00

SCALE

SHEET

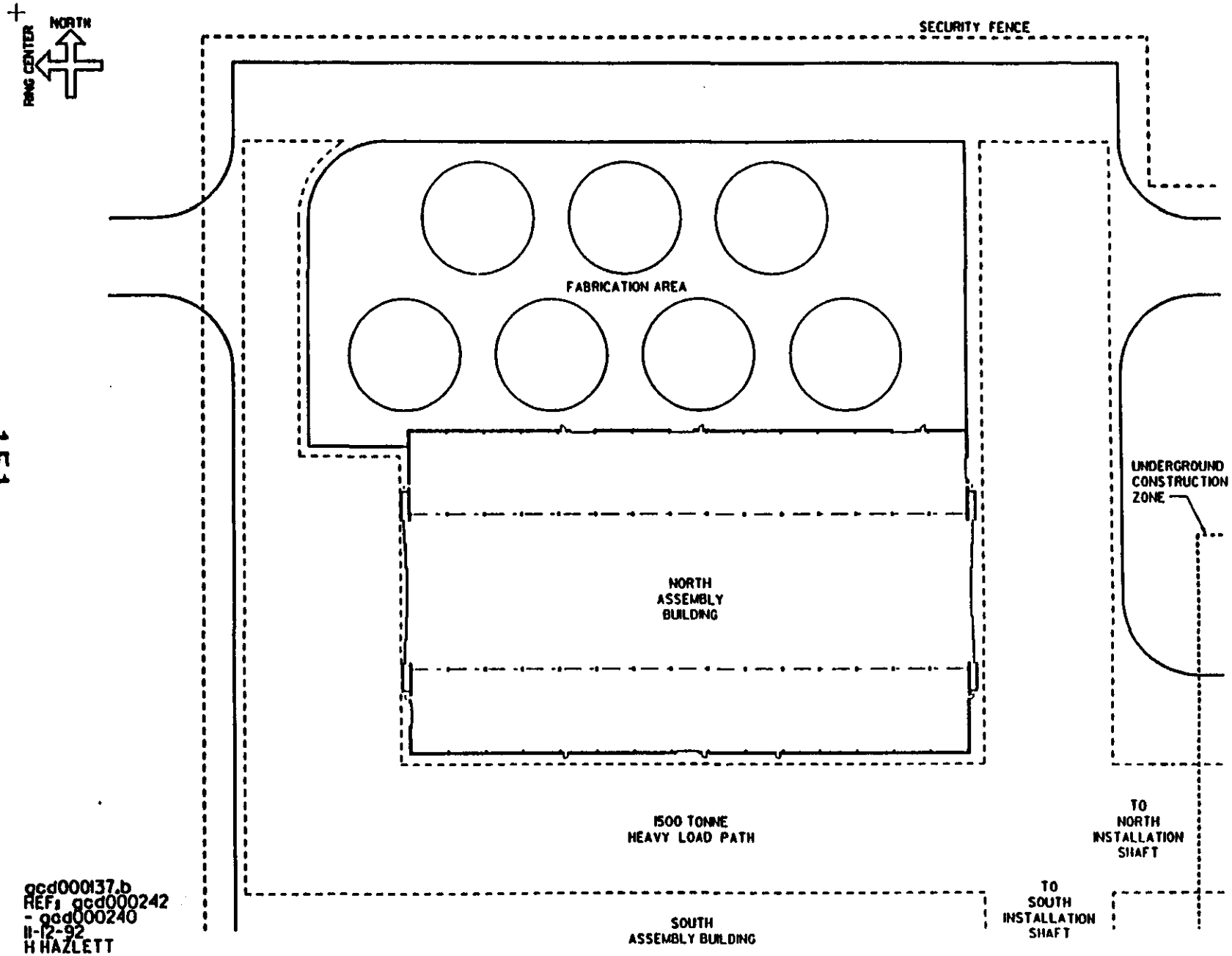

North Assembly Building Site Plan

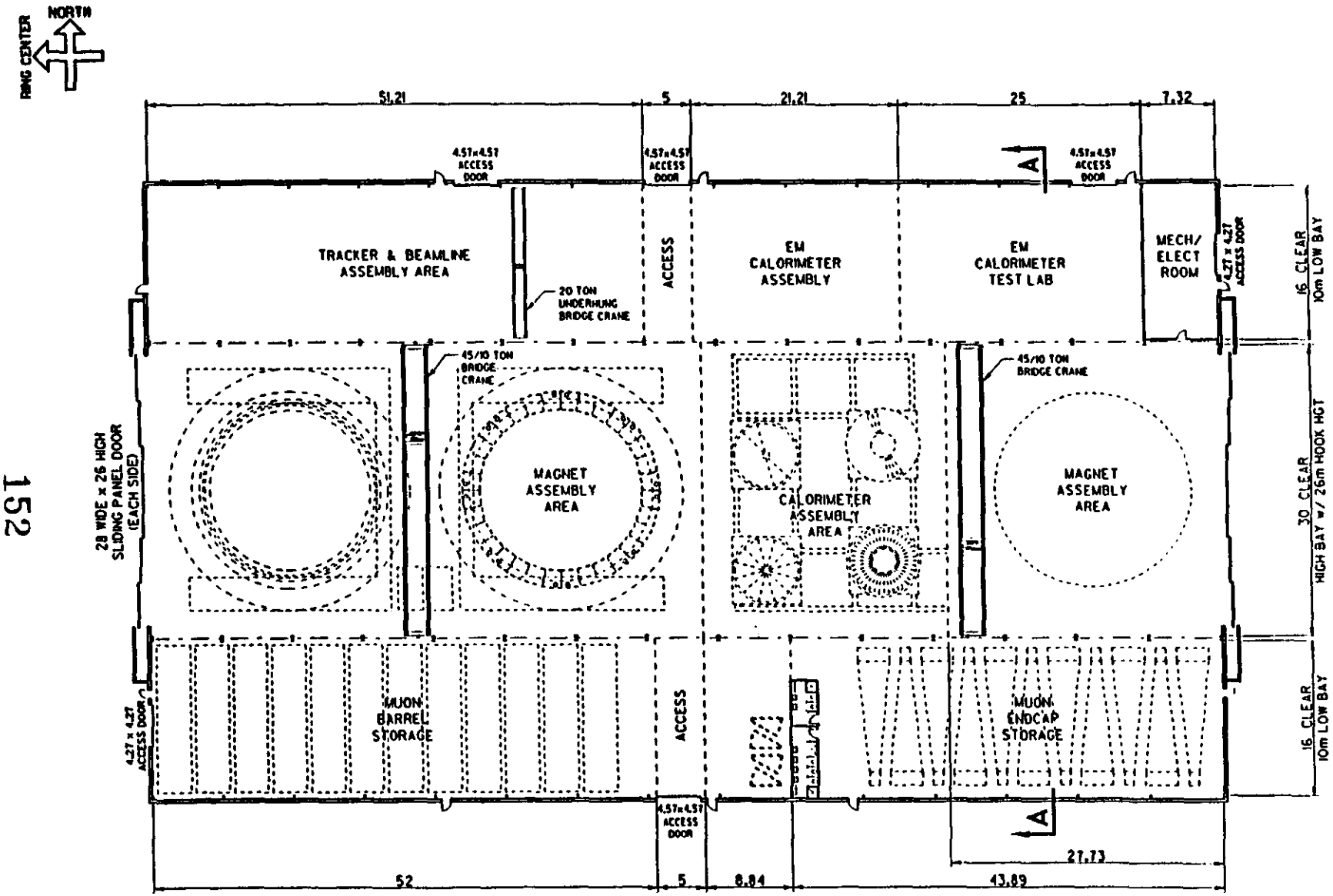

gcd000130.b
REF: gcd000240
11-12-92
H HAZLETT

North Assembly Building Floor Plan

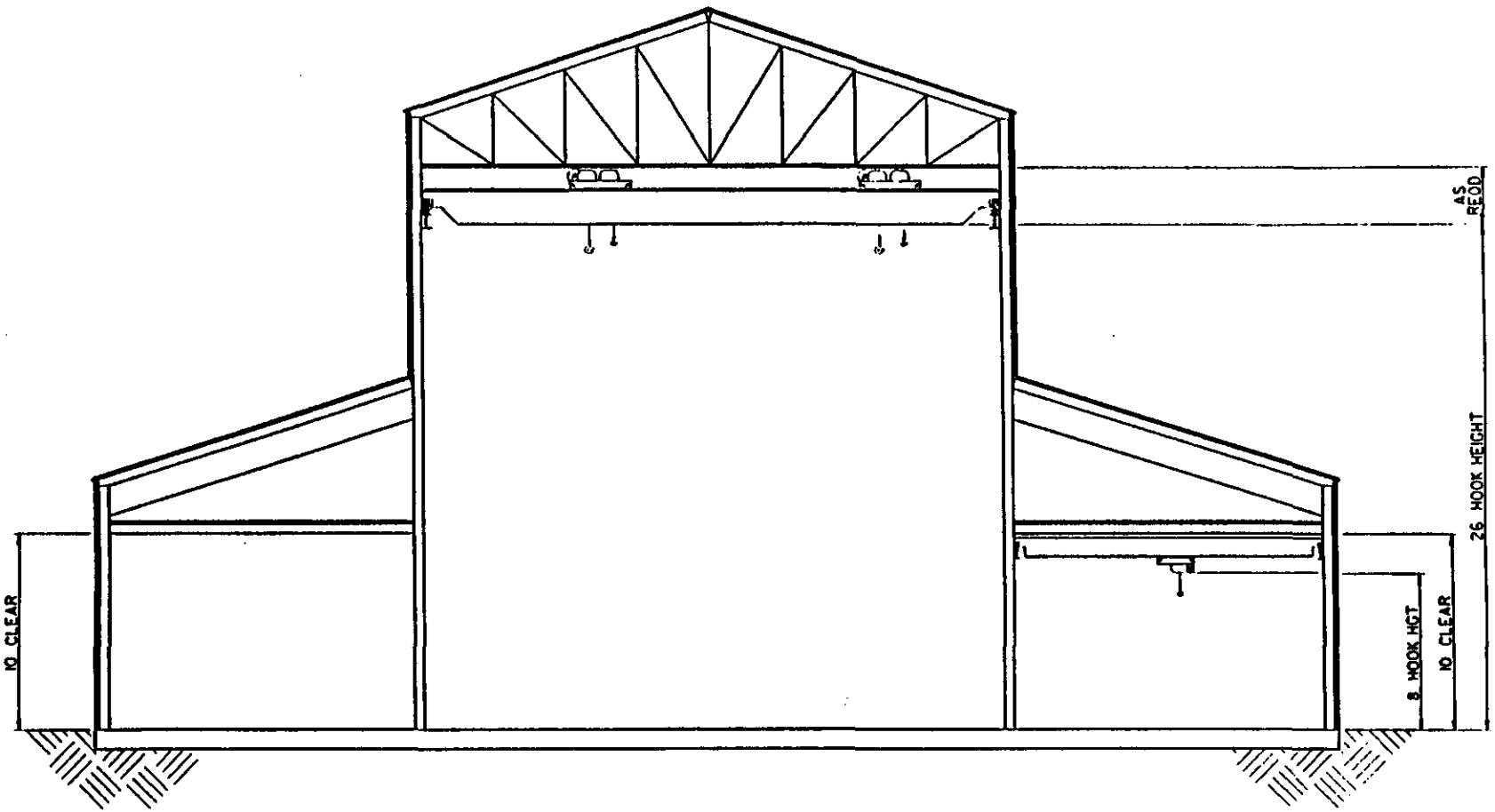

SECTION A-A

gcd00013l.b
REF: gcd00024l
11-12-92
H HAZLETT

North Assembly Building Section

FACILITIES PLANNING SCHEDULE

South Assembly Building

	Start	End
Title I	9/1/92	11/20/92
Title II	11/23/92	3/5/93
Title III	2/11/93	6/13/94
Bid/Award	2/8/93	3/26/93
Construction	3/26/93	4/29/94
Joint Occupancy Date	2/7/94	

North Assembly Building

	Start	End
Title I	9/1/92	11/20/92
Title II	11/23/92	3/5/93
Title III	5/24/93	10/3/94
Bid/Award	3/8/93	5/21/93
Construction	5/21/93	8/19/94
Beneficial Occupancy Date	8/19/94	

Utility Building

	Start	End
Title I	10/1/92	12/11/92
Title II	12/14/92	3/26/93
Title III	3/28/93	6/13/94
Bid/Award	3/29/93	6/4/93
Construction	6/4/93	4/29/94
Beneficial Occupancy Date	4/29/94	

Underground Hall

	Start	End
Title I	4/23/92	2/26/93
Title II	9/21/92	9/30/93
Title III	4/8/93	5/31/96
Bid/Award	1/8/93	3/3193
Construction	4/7/93	5/31/96
Joint Occupancy Date	1/2/96	
Beneficial Occupancy Date	5/31/96	

Fabrication Area

	Start
Title III	3/8/94
Notice to Proceed	3/15/94
Beneficial Occupancy Date	7/12/94

Cryogenic Systems

	Start
Fab, Ass'y, Installation Contract Award	9/20/93
He Refrigerator Installed and Tested	4/26/96
Transfer Lines Installed	9/27/96

Power/Protection System

	Start
Fab, Ass'y, Installation Contract Award	11/1/93
Installation and Testing Complete	5/28/96

Summary

- Surface facilities planned for the IR5 site support all planned fabrication activites
- In the current plan, many assembly steps and uprighting must be accomplished outdoors
- Base your proposal on the RFP
- Modest modifications will be entertained
- Questions?

Superconducting Super Collider

RFP Statement of Work Issues

Alan Tinker

SSC Laboratory
13 January, 1993

Superconducting Super Collider

GEM Magnet

RFP No. 92-A-09043

SOW Issues

Alan Tinker

13 January, 1993

GEM MAGNET SCOPE OF WORK

BASELINE EFFORT

Complete the design, fabricate, assemble, install, test and deliver the GEM Magnet Subsystem, including:

Assembly of 24 wound coil segments into cold mass halves

Additional coil assembly design, fabrication and assembly for:

- cryogen manifolds
- monitoring and control (diagnostic) hardware
- vacuum system and vacuum vessels
- thermal shields
- cold mass supports
- structural supports for the coil assemblies

Install and connect two coil assemblies,GFE forward field shapers/supports and central detector support in the underground hall

Test the complete magnet

OPTIONAL COLD MASS EFFORT

Complete the design, fabricate, assemble, test and deliver the magnet cold mass, including

Design, fabrication and assembly of coil form segments

Winding a sheathed cable-in-conduit conductor onto 24 coil forms

Testing the wound coil segments

OPTIONAL CONDUCTOR EFFORT

Complete the design, fabricate, assemble, test and deliver 26 (24 production,2 spare) sheathed cable-in-conduit conductors 1.15 km in length

UNPRICED OPTIONS

Final Assembly of GFE Forward Field Shapers

Final Assembly of GFE Central Detector Support

Operation & Maintenance Training Classes

Spares & Repair Parts

PROJECT INCLUDES

Project managment in accordance with DOE 4700.1

Cost and schedule reporting per DOE N 4700

QA per MIL-Q-9858A & DOE 5700.6C

Safety & health implementation plan IAW the SSCL ES&H manual

Configuration management program

Formal reviews- System Requirements Review (SRR)

Preliminary Design Review(PDR)

Critical Design Review (CDR)

Assembly Readiness Review (ARR)

Test Readiness Review (TRR)

Quarterly Management Reviews

Delivery of:

Data Items

Drawings

O&M manuals & training materials

Provisioning parts list

SSCL/URA IS FURNISHING

Facilities at IR-5

- North and South assembly buildings
- Outdoor fabrication area
- Underground experimental hall

Equipment

- Forward field shapers & central detector support
- Cryogenic plant & piping to warm side of vacuum vessel
- Power/protection system and distribution buss to warm side of vacuum vessel
- Magnet control system to warm side of vacuum vessel
- Conductor and/or wound coil segments (if options not awarded)

Superconducting Super Collider

RFP Status and Schedule

Bill Davis

SSC Laboratory
13 January, 1993

GEM MAGNET ACQUISITION SCHEDULE

Event	AS OF: 11/10/92	Revised Schedule As Of: 12/7/92	Status
SSA Formally Appointed	12-Nov-92		Complete
SSB Formally Appointed	12-Nov-92		Complete
Internal Review of Draft RFP	16-Nov-92		Complete
Draft RFP mailing to SSB Members	27-Nov-92		Complete
Eval. Plan/Incentive Plana Drafted	27-Nov-92		Complete
SSB RFP Approval/Training	4-Dec-92		Complete
Procurement Dept RFP Approval	4-Dec-92	7-Dec-92	Complete
Memo to Siskin	4-Dec-92	7-Dec-92	Complete
Memo to Director	N/A	7-Dec-92	Complete
Approved Requisition	4-Dec-92	8-Dec-92	Complete 11-Dec-92
DOE RFP Release Approval	4-Dec-92	8-Dec-92	Complete 14-Dec-92
Issue RFP	7-Dec-92	11-Dec-92	Complete 21-Dec-92
Pre-Proposal Conference	N/A	13-Jan-93	
Cut-off for Written Questions	18-Dec-92	27-Jan-93	
Magnet Proposals Due	25-Jan-93	26-Feb-93	
DCAA Audit Support Request	25-Jan-93	26-Feb-93	
Proposal Evaluations Complete	5-Feb-93	9-Mar-93	
Discussions Complete	19-Feb-93	23-Mar-93	
BAFO's Due	2-Mar-93	2-Apr-93	
SEB BAFO Evaluations Complete	5-Mar-93	2-Apr-93	
SEB Report Preparation	12-Mar-92	12-Apr-93	
SSA Briefing /Award Decision	16-Mar-93	16-Apr-93	
EEO Compliance Review Request	16-Mar-93	16-Apr-93	
DOE Pre-Negotiation Approvals	23-Mar-93	23-Apr-93	
DCAA Audit Results	23-Mar-93	23-Apr-93	
Negotiations Complete	30-Mar-93		
		30-Apr-93	
SSCL CRB Approval	9-Apr-93		
Submit Subcontract Package to DOE for Approval	16-Apr-93	15-May-93	
Magnet Subcontract Award	30-Apr-93	29-May-93	

SOLICITATION, OFFER AND AWARD	1. Reserved ▶	PAGE 1 OF 1

2. SUBCONTRACT NO.	3. SOLICITATION NO.	4. DATE ISSUED	5. REQUISITION NO.
	92-A-09043	December 21, 1992	102811

ISSUED BY:
Universities Research Association, Inc.
SSC LABORATORY
Procurement Department
2550 Beckleymeade Avenue
Dallas, Texas 75237-3946

7. ADDRESS OFFER TO *(IF OTHER THAN ITEM 5)*

SOLICITATION

8. Sealed offers in original and 12 copy for furnishing the supplies or services in the Schedule will be received at the place specified above, or if handcarried, in the depository located in Suite 400, Mail Stop 2020 until 3:00 PM *(Hour)* on FEB 26, 1993 *(Date)*

CAUTION - LATE Submissions, Modifications, and Withdrawals See Section L, Article No. L.5. *All offers are subject to all terms and conditions contained in this solicitation.*

9. FOR INFORMATION CALL: ▶ A. *NAME* William R. Davis B. *TELEPHONE NO.* (214) 708-1706

10. TABLE OF CONTENTS

(✓)	SEC.	DESCRIPTION	(✓)	SEC.	DESCRIPTION
		PART I-THE SCHEDULE			PART II-SUBCONTRACT CLAUSES
✓	A	SOLICITATION/SUBCONTRACT FORM	✓	I	SUBCONTRACT CLAUSES
✓	B	SUPPLIES, SERVICES AND PRICES/COST			PART III-DOCUMENTS, EXHIBITS AND ATTACHMENTS
✓	C	DESCRIPTION/SPECS./WORK STATEMENT	✓	J	LIST OF ATTACHMENTS
✓	D	PACKAGING AND MARKING			PART IV-REPRESENTATIONS AND INSTRUCTIONS
✓	E	INSPECTION AND ACCEPTANCE	✓	K	REPRESENTATIONS, CERTIFICATIONS AND OTHER STATEMENTS OF OFFERORS
✓	F	DELIVERIES OR PERFORMANCE			
✓	G	SUBCONTRACT ADMINISTRATION DATA	✓	L	INSTRS., CONDS., AND NOTICE TO OFFEROR
✓	H	SPECIAL SUBCONTRACT REQUIREMENTS	✓	M	EVALUATION FACTORS FOR AWARD

OFFER *(Must be fully completed by offeror)*

11. In compliance with the above, the undersigned agrees, if this offer is accepted within _____ calendar days *(120 calendar days unless a different period is inserted by the offeror)* from the date for receipt of offers specified above, to furnish any or all items upon which prices are offered at the price set opposite each item, delivered at the designated point(s), within the time specified in the schedule.

12. DISCOUNT FOR PROMPT PAYMENT ▶	10 CALENDAR DAYS %	20 CALENDAR DAYS %	30 CALENDAR DAYS %	60 CALENDAR DAYS %

13. ACKNOWLEDGMENT OF AMENDMENTS *(The offeror acknowledges receipt of amendments to the SOLICITATION for offerors and related documents numbered and dated)*	AMENDMENT NO.	DATE	AMENDMENT NO.	DATE

14A. NAME AND ADDRESS OF OFFEROR	15. NAME AND TITLE OF PERSON AUTHORIZED TO SIGN

14B. TELEPHONE NO.	☐ 14C. CHECK IF REMITTANCE ADDRESS IS DIFFERENT FROM ABOVE. ENTER SUCH ADDRESS IN SCHEDULE.	16. SIGNATURE	17. DATE

AWARD *(To be completed by UNIVERSITIES RESEARCH ASSOCIATION, INC.)*

18. ACCEPTED AS TO ITEMS NUMBERED	19. AMOUNT	20. REQUISITION NUMBER(S)

21.	22. SUBMIT INVOICES TO ADDRESS SHOWN IN ▶ *(4 copies unless otherwise specified)*	ITEM 6

23. ADMINISTERED BY *(if other than Item 6)*	24. PAYMENT WILL BE MADE BY	
25. NAME OF URA OFFICIAL *(Type or print)*	26. URA OFFICIAL *(Signature)*	27. DATE

IMPORTANT - Award will be made on this Form, or on URA Form 26, or by other written notice.

This solicitation may result in a formal subcontract. Said subcontract shall be considered a subcontract under prime contract number DE-AC35-89ER40486 by and between the DOE and URA.

Superconducting Super Collider

gem

Responses to Questions

SSC Laboratory
13 January, 1993

Clarification of controls systems

- Each sensor is costed with the hardware element to which it is attached.

- Vacuum system controls are being included in the proposal scope (this is a change in the RFP). Included in the vacuum system controls will be the gages, readouts, local controllers, and interface with the overall magnet control system.

- All other controls are outside the scope of this RFP (cryogenics controls, power/protection controls, quench detection, etc.)

gem γeμ

gd1/13/93-14
1/13/93

Superconducting Super Collider
Laboratory

2550 Beckleymeade Avenue
Dallas, TX 75237-3946
(214) 708-1706 FAX (214) 708-1710

Procurement

January 13, 1993 92 4200 F G

TO: GEM Magnet Pre-proposal Conference Attendees

SUBJECT: Responses to Written Questions Received Prior to the January 13, 1993 Conference

Question 1 Part III, Section J, Attachment A, GEM Magnet Specification, Para. 3.2.2.2 Estimated Weight (mg)

Response The heading should be (Mg) Mega grams.

Question 2 Part I, Section C, Statement of Work, Para. 2.1, 8.2.2j and 8.2.2k and Part III, Section J, Attachment H, Magnet Summary SWBS, Element 40.2.7 and 40.3.7. There seems to be some conflict on inclusion of the control system.

Response The magnet power/protection and control system is not included in this effort. However, vacuum system local controls are included. The Magnet Summary SWBS elements 40.2.7.4 Vacuum Controls Design and 40.3.7.4 Vacuum Controls Fabrication & Assembly should have an "X" in the column under Baseline Proposal. The "X" under not applicable for these elements should be deleted. These changes will be reflected in an amendment to the RFP. Furthermore monitoring and control (diagnostic) hardware (temperature and pressure sensors, voltage taps, strain gauges, etc.) are included in the magnet coil assemblies and are to be priced in the SWBS elements where they are physically located. Further clarification on controls, diagnostics, power/protection, etc. Diagnostic sensors are assumed to be included in the items to which they are attached. This includes all parts of the sensor up to and including the first connector which is in air. This connector is typically mounted on the vacuum vessel. For example:

- Coil voltage taps, tempearture sensors, strain gages, or acoustic emission sensors on the cold mass are included in WBS 40.2.1.1.3, and 40.3.1.1.3.

- Strain gages, temperature sensors, etc, which are attached to the cold mass supports are included in WBS 40.2.1.3.2 and 40.3.1.3.2.

- Temperature sensors and other instrumentation attached to the vapor-cooled leads are included in WBS 40.2.1.3.4 and 40.3.1.3.4.

- Vacuum gages are an exception to this rule, as they are assumed to be included in the vacuum system, WBS 40.2.6 and 40.3.6.

Local controls, signal processors, and readouts for all of these items, including cabling from the vessel, are covered as follows:

- Quench detection electronics are included in WBS 40.2.7.5 and 40.3.7.5

- Readouts for temperature sensors, strain gages, etc within the vacuum vessel are included in WBS 40.2.7.2 and 40.3.7.2.

- Temperature sensors and other instrumentation attached to the vapor-cooled leads are also included in WBS 40.2.7.2 and 40.3.7.2.

- Vacuum gage readouts and local controls (including interfaces to the overall magnet control system) are included in the vacuum controls WBS 40.2.7.4 and 40.3.7.4.

Question 3 Section C.5.0. The Reference Documents listed are to be considered in the preparation of our proposal. Please explain the statement that they are to be used "to the extent specified". Does this refer to their use only in those sections of the RFP where specific reference is made to these documents?

Response No, this refers to whether the documents are "applicable" or "to be used as a guide".

Question 4 Reference L.36.8. "The certifications and statements require submittal of annual reports, letter to banks and other documentation. Typically, this section would also include the executed copies of the representations and certifications provided in Section II, Contract Articles. Since this information does not address the technical content of our proposal and can amount to a number of pages, we question whether it should be included in the page count for Volume I. Please consider excluding this section from the page limit for Vol. I."

Response Concur. The RFP will be amended to explicitly delete L.36.8 requirements from the Volume I page limitation.

Question 5 Reference L.41.2.3. "Please define how complexity code (A-E) will be used in the evaluation."

Response These codes will be used in the cost evaluation process as it relates to profit/fee analysis. For this analysis, the weighted guideline system prescribed in the Department of Energy Acquisition Regulation (DEAR) will be applied.

Question 6 Part III, Attachment E. Please provide copies of the MIT drawings listed as items A.1 through C.14.

Response Hard copy of the MIT drawings furnished on Microfiche with the RFP are available at the conference through Alan Tinker or by request per RFP instructions.

Question 7 Reference Part IV Section M. "The Bidders have been asked to produce eight conceptual plan (L.36.7). The evaluation criteria address only three of these. How are the other five plans to be weighted in the evaluation?"

Response As specified in M.3 of the RFP, the plans will be examined by the Source Evaluation Board as noted in the following table:

AREA	SUBAREA	FACTORS
Technical	Fabrication and Assembly	*Manufacturing Plan*
		Procurement Plan
	Installation and Testing	*Manufacturing Plan*
		Transporation and Storage Plan
	Design Completion	*Master Test Plan*
		System Engineering Management
		Plan
		Configuration Management Plan
Management	Management Plan	
	Quality Assurance Plan	
	Safety and Health Plan	
	Training Plan	
Cost		

Question 8 Please clarify the following discrepancy
A. Paragraph 3.1.1 of GEM Spec. TN-92-234 indicates that "compressive loads will not be transferred to the central detector support itself."

B. Paragraph 3.6.5.1 indicates that "the central detector support shall be free standing with provisions to meet the magnet loads from all the coil assemblies."

Response The central detector support (CDS) will not be designed to accept any forces from the magnet subsystem, since it is required that the CDS be more easily aligned than the magnet. Large axial magnetic forces normally act among the two forward field shapers and the two magnet halves. At the magnet midplane ($z = 0$), these forces are directed so that they push the two magnet halves together. In order to keep the magnet halves separated, to leave space for the CDS, compressive support members are placed between the magnet halves. These block-like supports contact the end rings of the two magnet halves in the area of the longerons on the outer vessel, so that loads are transferred directly from vessel to block to vessel. The central detector support is not involved in this load path. The compression blocks are positioned in clearance holes through the CDS.

Stability of the CDS has been difficult to achieve, due to its narrow physical envelope. We have found that significant stability improvement is possible if the CDS is "trapped" by the magnet end rings. This could be accomplished by installing sets of opposed wedges between the end ring and the CDS, after alignment. The load carried by these sets of wedges, while insignificant compared to the total axial magnetic force, will be sufficient to improve the stability of the CDS.

Question 9 Please provide copies of the following SSCL documents
- P40-000031 Configuration Management Plan
- TN-92-116 GEM Technical Design Report

Response Copies of SSCL Documents are available at the conference through Alan Tinker or by request per RFP instructions.

Question 10 Are any drawings available for the vacuum chamber support legs? Is the design of these legs included in TN-91-116?

Response No to both questions.

Question 11 Drawing AA92-102671-00 shows the outer vessel wall as 2 inches thick with 817.3 in. inside diameter. Drawing AAA92-102656-00 shows the outer vessel wall as 1 inch thick with 795.2 inches inside diameter. Please advise which is correct.

Response The present vessel design features a 25mm (1 inch) thick outer vessel, reinforced by 10 stiffening rings. This is shown correctly in drawing no. AAA92-102656. The outer vessel configuration shown in drawing no. AAA92-102761 is incorrect. This will be reflected in an RFP amendment.

Question 13 Reference Part II Section I. "A number of clauses including 78, Government Property (Subparagraph G.), 88, Work on Laboratory or Government Premises, and 93/94, Patent Indemnity include indemnifications and similar provisions which generate liabilities unusual for a cost reimbursement contract. Please explain how these clauses relate to a cost reimbursement contract and specifically how such contingent liability is managed under the Funds Limitation clause assuming all such costs incurred are allowable costs."

Response The question is under review by SSCL Legal. Any adjustment will be reflected in an RFP amendment.

Question 14 Reference Part III Section J, Attachment G. "Small Business and Small Disadvantaged Business Plan makes reference to 'Liquidated Damages - Small Business Plan' and that 'all other goals set forth in this Subcontracting Plan are subject to such Liquidated Damages Provisions.' Please Clarify."

Response Liquidated Damages provisions do not apply to the Subcontracting Plan. The RFP will be amended to delete this sentence.

Question 15 Reference Part 1, C.2.0, Scope of Work. "The Subcontractor shall furnish all ----- (except as defined in paragraph C.7.00), -----and deliver the GEM Magnet Subsystem items and documentation listed in Section F." A magnet subsystem would normally include protection and control components.

Response See response to question number 2.

Question 16 Reference Part 1, C.2.1 Baseline effort. Tasks include "monitoring and control (diagonistic) hardware. Such hardware might include voltage, temperature or strain sensors and the instrumentation for read out and control.

Response See response to question number 2.

Question 17 Paragraph 3.7.0, SSCL/URA Furnished Equipment, does not include design and hardware for magnet protection and control components, (e.g.: Instrumentation, dump resistor, breaker or controls).

Response See response to question number 2 with reference to instrumentation and controls. The dump resistor and breaker are part of the SSCL furnished power/protection system.

Question 18 The GEM Magnet Summary SWBS, Rev. B, element 40.3.7 defines that the magnet controls are not applicable.

Response See response to question number 2.

Question 19 Please clarify the scope of work pertaining to the magnet subsystem protection and control functions and the interfaces between the magnet subsystem and other protection and control subsystems.

Response See response to question number 2.

Question 20 Reference Part IV, L.40.1.8 Computer Format. "The Offeror many decide to use the SSCL RFP Forms contained in this section of the RFP" (for preparation of Volume II - Cost Proposal)."

Response The reference to SSCL Forms was inadvertently carried over from the draft RFP. Use of the computer format is mandatory. The RFP will be amended to clarify.

William R. Davis

William R. Davis, CPCM, C.P.M.
Senior Subcontract Administrator