GEM TN-92-245

Muon System Alignment Meeting - SSCL

November 18, 1992

Abstract:

Agenda, attendees, and presentations of the GEM Muon System Alignment Meeting held at the SSC Laboratory on November 18, 1992.

GEM Muon System Alignment Meeting - Updated Agenda - November 12, 1992

SSC Laboratory

November 18, 1992 1:00 pm - 6:00pm

There will a meeting of the GEM Muon System Alignment Group on the afternoon of Wednesday, November 18. The goal of the meeting is to review the past year's alignment R&D and to focus on the upcoming year's program now that the muon system is beginning to converge on a final design. The proposed agenda is as follows:

1:00	Introduction, Review of GEM Muon System Status - C. Wuest	10 minutes

Local Alignment

1:15	Introduction to GEM Muon System Local Alignment - R. Sawicki (LLNL)	15 minutes
1:30	Review of Draper LED/Lens system, and other Draper R&D - J. Paradiso (Draper)	30 minutes
2:00	Review of Alignment work at Tsinghua University - + Coleman Johnson	15 minutes
2:15	Review of LLNL High-range Sensor R&D - E. Ables (LLNL)	15 minutes
2:30	Review of LLNL Laser/Lens system - R. Sawicki (LLNL)	15 minutes
2:45	Break	15 minutes
3:00	U-AVLIS Alignment, Control Systems and Diagnostics L. Collins (LLNL)	15 minutes
3:15	Interpolation schemes for alignment - A. Ostapchuk (SSCL)	15 minutes
3:30	Interpolation schemes for alignment - J. Paradiso (Draper)	15 minutes
3:45	X-ray alignment systems for CSCs - A. Vorobyov (BNL), A. Ostapchuk (SSCL)	15 minutes
~~4:00~~	~~Gamma rays for alignment - G. Mitselmakher (SSCL)~~	~~15 minutes~~

Global alignment

4:15	Introduction to Global Alignment - R. Sawicki (LLNL)	15 minutes
4:30	Background Muons for Alignment - Issues - G. Mitselmakher (SSCL), A. Ostapchuk (SSCL)	15 minutes
4:45	Other options for vertex placement - Group	15 minutes
5:00	Global muon tower pointing requirements - Group	15 minutes
5:15	Wrap-up and plans for FY93 program - Group	45 minutes
6:00	Adjourn	

GEM Muon System Alignment Meeting - 11/18/92

NAME	INSTITUTION	PHONE	EMAIL
Craig Wuest	LLNL	(510) 423-2909	WUEST@LLNL.GOV
Rick Sawicki	LLNL	510/423-8963	RICK.SAWICKI@[illegible].GOV
Leland Collins	LLNL	510/423-9897	
Andrey Ostapchuk	SSCL/ITEP	214-708-3007	OSTAPCHUK@SSCVX1
Vladimir Glebov	SSCL	214-708-6321	GLEBOV@SSCVX1
Smoline D	BNL	214-708-3069	Smoline@SSCVX1
MIKE GAMBLE	SSCL	214-708-6050	SSCVX1::gamble
ELDEN ABLES	LLNL	510-422-4809	ABLES@AMADON.LLNL.GOV
Robert Miller	M.S.U.	517-353-1697	MILLER@MSUPA
Yuri Bonushkin	SSCL	214-708-3078	BONUSHKIN@SSCVX1
JACQUES GOVIGNON	C.S. DRAPER	617-258-3866	GOVIGNON@DRAPER.COM
Sergey Movchan	SSC/Dubna	214-708-6313	MOVCHAN@SSCVX1
VADIM LYSIAKOV	SSC/Dubna	214-708-6361	LYSIAKOV@SSCVX1
Yuri Ershov	SSC/Dubna	214-708-6313	ERSHOV@SSCVX1
Yuri Kiryushin	BNL/Dubna	214-708-3064	YUKIR@SSCVX1
Coleman Johnson	SSC	214-708-1188	JOHNCOLE@SSCVX1
Allen House	LLNL	510-423-8192	HOUSE3@LLNL.GOV
Frank Taylor	MIT	617-253-7249	FET@MITLNS
Andrei Golutvin	SSCL/ITEP	~~[illegible]~~	Golutvin@SSCVX1
Howie BAKER	DRAPER	(214)-708-6385 → (617)258-3411	hbaker@draper.com
Ya-nan Guo	SSC	(214)-708-4457	GUO@SSCVX1
E. Zimmer-Nixdorf	SSC	214-708-6205	SSCVX1::ZNX
A. Korytov	MIT	617-258-5260	MITLNS::KORYTOV

R&D of Alignment Technology
FY 1993 Budget

Craig R. Wuest, Rick Sawicki

Lawrence Livermore National Laboratory

October 27, 1992

A first attempt at formulating a budget for FY 1993 for the Muon system alignment program has been made. The tasks break down as follows:

2.7.1 Define and develop alignment technology (LLNL, SSCL, Draper)

- **2.7.1.1** Review alignment systems on other HEP experiments.
- **2.7.1.2** Review Draper R&D results.
- **2.7.1.3** Review LLNL R&D results.
- **2.7.1.4** Review Tsinghua University R&D results.
- **2.7.1.5** Review six-point interpolation technique.
- **2.7.1.6** Define alignment technology (or technologies) for GEM (dependent on chamber technology choice).

2.7.2 Test benches for precise, large dynamic range sensors (LLNL, Draper, SSCL, MSU, Tsinghua U.)

- **2.7.2.1** R&D of LED/Lens straight line monitoring system.
  - **2.7.2.1.1** Review Draper R&D results.
  - **2.7.2.1.2** Continuation of FY 1992 work - set up laboratory test for evaluation at full scale - 9 meters.
    - **2.7.2.1.2.1** LED/Lens system procurement.
  - **2.7.2.1.3** Electronics development
    - **2.7.2.1.3.1** Data acquisition systems definition.
    - **2.7.2.1.3.2** Data acquisition systems procurement.
    - **2.7.2.1.3.3** Data processing and visualization software procurement and development.
  - **2.7.2.1.4** Laboratory tests at 9 meters.
- **2.7.2.2** Multi-point alignment monitor R&D (may not be required depending on technology choice, LSDTs will probably require it, CSCs may not). - new Draper CCD - Korytov strip pickup
  - **2.7.2.2.1** Review LLNL results on stretched wire technique and GaAs sensor development.

2.7.2.2.2 Develop capacitive pick-up sensor for stretched wire technique.
- 2.7.2.2.2.1 procurement for large scale (15 meter) prototype.
- 2.7.2.2.2.2 fabricate large scale prototype.
- 2.7.2.2.2.3 develop readout system for capacitive pick-up.

2.7.2.2.3 Develop GaAs transparent position-sensitive photodiodes.
- 2.7.2.2.3.1 procurement for large scale (15 meter) prototype, including IR laser.
- 2.7.2.2.3.2 fabricate large scale prototype.
- 2.7.2.2.3.3 develop readout system for GaAs photodiodes.

2.7.2.2.4 Laboratory tests at 15 meters.
- 2.7.2.2.4.1 Stretched wire.
- 2.7.2.2.4.2 IR Laser/GaAs photodiodes

2.7.3 Integration with chamber design and support structure (LLNL, Draper).

2.7.3.1 Mechanical

- 2.7.3.1.1 Fiducialization.
- 2.7.3.1.2 Hardware design.
  - 2.7.3.1.2.1 Procurement.
- 2.7.3.1.3 Structure line-of-sight design and verification (technology dependent).

2.7.3.2 Electronics

- 2.7.3.2.1 Integration of sensor readout electronics into chamber design.
- 2.7.3.2.2 Cabling for power, signals.

2.7.4 Demonstration of proof-of-principle with support structure and chambers (possibly less than full-scale). (LLNL, SSCL, MSU, Tsinghua U.)

2.7.4.1 Sub-scale verification testing of muon alignment system concept (six-point interpolation technique plus multi-point monitors if LSDTs are the technology).

2.7.4.1.1 Design and assembly of structure and chamber test sector.
- 2.7.4.1.1.1 Procurement of materials for structure and chamber test segment.
- 2.7.4.1.1.2 Fabrication of structure and chamber test segment.
- 2.7.4.1.1.3 Software development for data acquisition and analysis.

2.7.4.1.2 Installation of structure and chamber test segment.
- 2.7.4.1.2.1 Development of alignment procedures - local.
- 2.7.4.1.2.2 Procurement of auxiliary alignment equipment.
- 2.7.4.1.2.3 Alignment survey of structure and chamber test segment.

2.7.4.1.3 Laboratory tests of interpolation technique using structure and chamber test sector.

2.7.4.1.3.1 Alignment comparison and verification with "standard" survey.

2.7.4.1.3.2 Environmental sensitivity - temperature, vibration, air currents, etc.

2.7.5 Global alignment evaluation (LLNL, Draper, MSU, SSCL, Tsinghua U.)

2.7.5.1 Evaluate feasibility of using background muons to define vertex location.

2.7.5.2 Evaluate feasiblity of reprogramming trigger roads to accomodate global misalignments.

2.7.5.3 If required, design global muon alignment monitoring system.

2.7.5.4 Develop global alignment procedures.

2.7.6 Simulate operation of complete system (LLNL, MSU, SSCL, Tsinghua U.)

2.7.6.1 Coordinate design with system analysis performed by A. Ostapchuk

2.7.6.2 Determine feasibility of using cosmic ray muons for straight-line alignment verification for all orientations of muon chambers.

2.7.6.3 Coordinate structural analysis to confirm alignment stability of chambers and truss structure.

2.7.6.4 Comparison of six-point interpolation technique with analysis.

2.7.6.5 Coordination of alignment simulations and measurements with Muon Simulations Group.

2.7.6.5.1 Studies of alignment results on muon tracking resolution.

2.7.7 Solicit interest from industry for fabrication of alignment sensors and associated hardware. (LLNL, Draper)

2.7.7.1 Transfer alignment designs to prototype hardware development (assume work must start in FY93 to develop a full-scale muon sector prototype).

2.7.7.1.1 Generate detailed drawing packages for sensors and associated hardware.

2.7.7.1.2 Identify potential industrial vendors.

FY 1993 Budget:

Assumptions: 1 FTE = $100K (institutionally averaged, including Tsinghua U.)

2.7.1 Define and develop alignment technology (LLNL, SSCL, Draper)

0.25 FTE for technical reviews, design, drafting, etc.
10 SSCL trips
2 CERN trips to evaluate existing LEP alignment technology.

Manpower:	$25K	$25K
Procurements:	$0K	
Travel:	$20K	$20K
Total:		**$45K**

2.7.2 Test benches for precise, large dynamic range sensors (LLNL, SSCL, MSU, Tsinghua U.)

1.0 FTE for test bench/sensor R&D (2 FTEs for 1/2 year then transfer to 2.7.4) Procurement of materials for LED/Lens, capacitive pickup ($10K), GaAs photodiode fabrication ($20K), data acquisition electronics and computer system ($20K), and IR laser for GaAs photodiodes ($10K).

Manpower:	$100K	$100K
Procurements:	$60K	$60K
Total:		**$160K**

2.7.3 Integration with chamber design and support structure (LLNL, Draper).

0.25 FTE for designing fiducials into chambers, designing electronics into chambers, $10K for procurement of fiducials, optics, electronics layout and fab.

Manpower:	$25K	$25K
Procurements:	$10K	$10K
Total:		**$35K**

2.7.4 Demonstration of proof-of-principle with support structure and chambers (possibly less than full-scale). (LLNL, SSCL, MSU, Tsinghua U.)

2 FTEs for 1/2 year for design and fabrication of structure/chamber test segment, 2 FTEs for 1/2 year for assembly and operation of test segment, $50K for materials and fabrication costs for structure/chamber test segment, $10K for auxiliary alignment equipment.

Manpower:	$200K	$200K
Procurements:	$60K	$60K
Total:		**$260K**

2.7.5 Global alignment evaluation (LLNL, MSU, SSCL, Tsinghua U.)

0.25 FTE for evaluation of muon towers relative to the vertex using background muons. If not viable then design an external alignment system.

Manpower:	$25K	$25K
Total		**$25K**

2.7.6 Simulate operation of complete system (LLNL, MSU, SSCL, Tsinghua U.)

0.25 FTE for coordination of alignment results with simulations and analysis, and interaction with the Muon Simulations group to determine alignment effects on muon track resolution.

Manpower:	$25K	$25K
Total		**$50K**

2.7.6 Solicit interest from industry for fabrication of alignment sensors and associated hardware. (LLNL, Draper)

0.5 FTE for technology transfer of alignment sensors and associated hardware to production development, coordinate design, drawing packages, solicit interest from industry, identify potential vendors.

Manpower:	$50K	$50K
Total:		**$50K**

Budget Summary:

Manpower:	4.5 FTEs	$450K
Procurements:		$80K
Fabrication:		$50K
Travel:		$20K
Total:		**$600K**

R. Sawicki

Introduction to Local Alignment

Local alignment status

- Projective alignment system (PAS) is baseline configuration
  - basis
    - -- "New approach to Muon System Alignment", GEM TN-92-202
    - -- " Analysis of an Alignment Scheme for the GEM Muon Barrel", GEM TN-92-150
  - relieved superlayer-to-superlayer placement precision requirements
  - may have eliminated need for multi-point alignment monitors
  - eliminated need for radial (barrel) or axial (endcap) placement monitoring between superlayers

- LED/lens alignment monitors are well suited to meet PAS requirements
  - technology is proven
  - accuracy better than 25 microns demonstrated
  - low cost

- Concept needs to be engineered into an integrated system
  - integrated mechanical/electrical system designed to accommodate constraints of the real system
  - demonstration of the performance of an integrated tower in a dynamic environment
  - optimized for performance and low cost

Local alignment system concepts

CSC

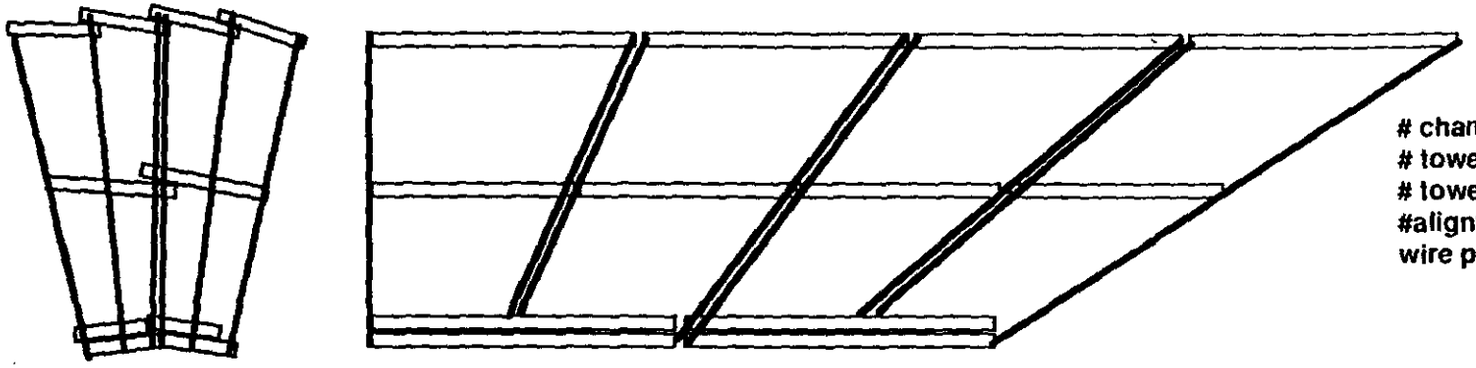

chambers = 32
towers = 8
tower alignment paths = 48
#alignment points = 144
wire plane configuration = 8/4/4

RDT

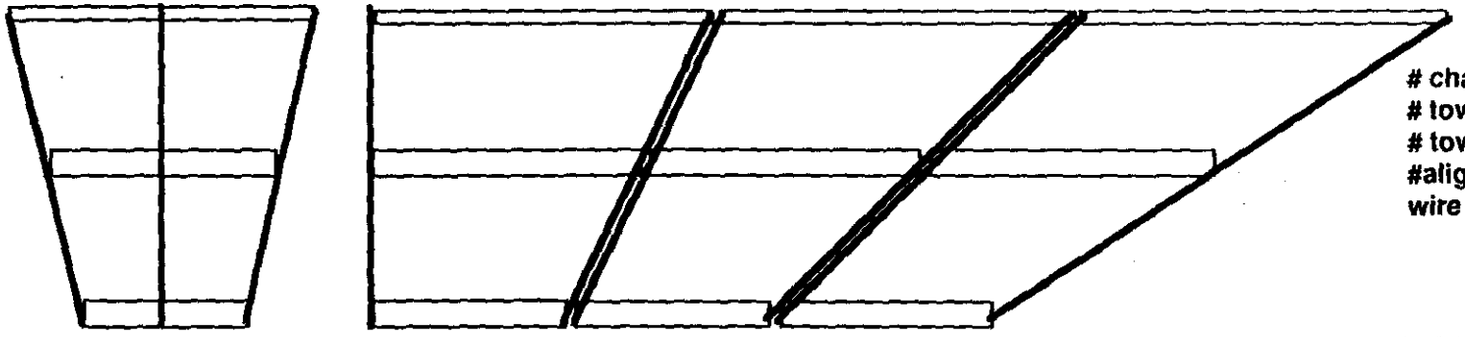

chambers = 9
towers = 3
tower alignment paths = 18
#alignment points = 54
wire plane configuration = 8/8/4

= chamber

= alignment path

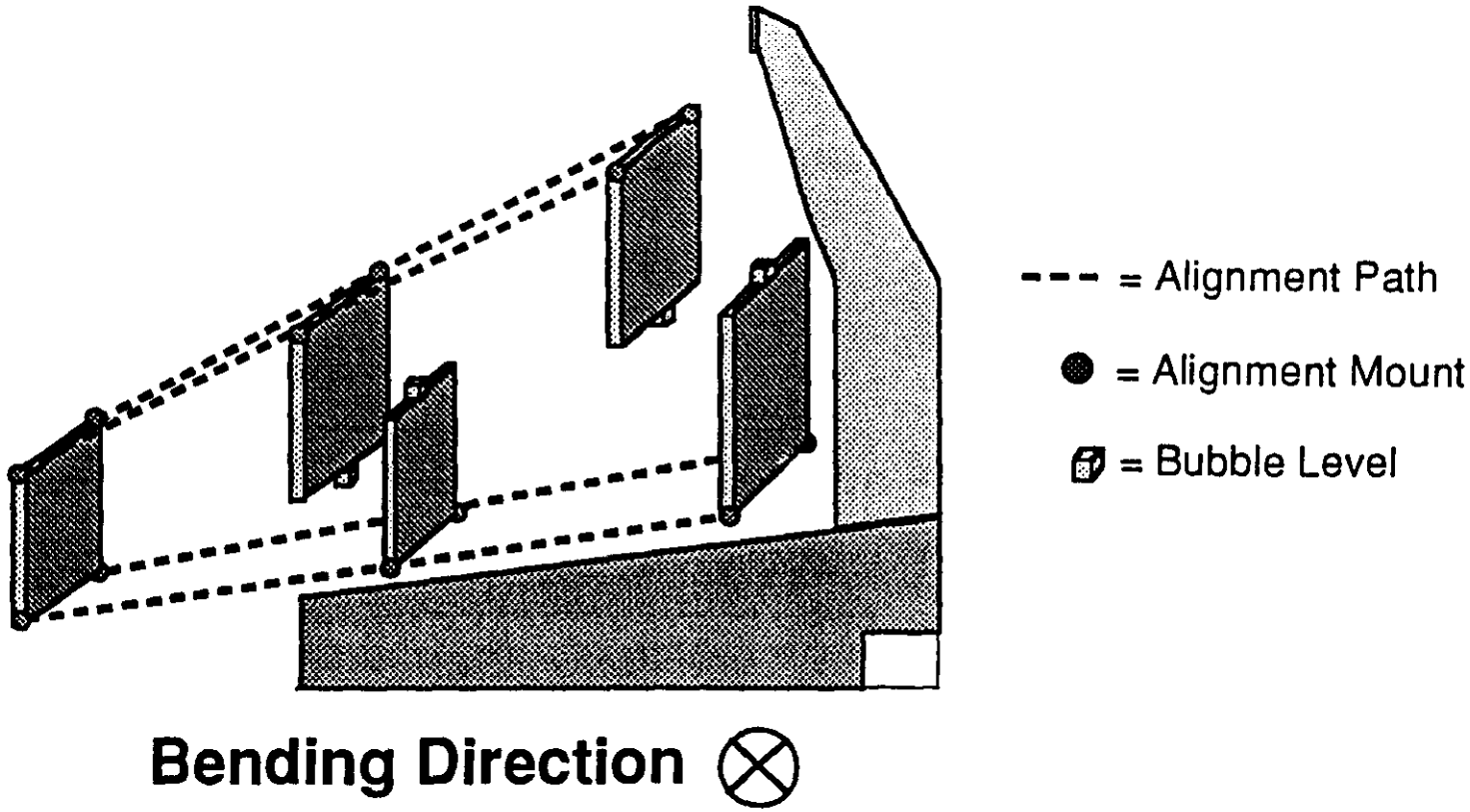

Figure 7: Alignment Paths in the Muon Endcaps

accuracy of 60 μm[14]. Since this is also monitored by the alignment paths directed along the hexant sides, an explicit measurement of the radial layer displacement may not be required; if needed, a precision rod equipped with a range measurement (i.e. capacitive sensor or mechanical gauge) will determine this shift with sufficient accuracy, as shown in Fig. 4 (this measurement will be translated across the multiple chamber packages in a

IP). The local alignment (between superlayers) is assumed to be referenced to the mean position of the composite chambers (the chambers themselves are allowed to have a 50 μm alignment scatter (in ϕ), provided that the superlayer reference is taken at the mean).

Local Alignment (between superlayers)		*Global Alignment (to IP)*
	Muon Barrel	
MEASUREMENT ACCURACY	PLACEMENT	PLACEMENT / MEASUREMENT ACCURACY
Bending Coordinate (ϕ): 25 μm	~ 5mm	ϕ: 5 mm (200 μm goal)
Radial Coordinate (r): ~~60 μm~~		r: 10 mm
Beamline Coordinate (z): ~~1 mm~~		z: 5 mm
	Muon Endcaps	
Bending Coordinate (ϕ): 25 μm	~ 5mm	ϕ: 5 mm (200 μm goal)
Radial Coordinate (r): ~~1 mm~~		r: 4 mm
Beamline Coordinate (z): ~~125 μm~~		z: 10 mm

ALIGNMENT REQUIREMENTS MUST BE REEVALUATED TO REFLECT PAS STRATEGY

Near term local alignment effort

- Analysis
  - PAS optimization
    - sensor models, optimal estimators, noise, resolution
  - re-evaluation of alignment requirements - placement accuracy , real time measurement accuracy, stability, drift
  - evaluation of PAS in the endcap
  - chamber structural deformation analysis
  - evaluation of cosmic rays to verify superlayer alignment at all orientations
- Design
  - fiducialization concept
  - alignment hardware design
  - barrel and endcap configuration
    - lines-of-sight
    - impact on acceptance
  - chamber support and adjustment mechanisms
  - hardware for prototype module
- Test
  - validation of LED/lens performance at full scale and real turbulence conditions
  - integrated performance test (subscale?) of 6 point PAS system
- Development
  - improved dynamic range of sensors
  - evaluation of SWAT for high range, low cost application
  - alignment verification technique
    - -- xrays (internal (BNL) or external (wire fiducials))
    - -- optical (laser, alignment scope, ...)

J. Paradiso

Review of Draper R&D

Alignment Progress & Prognosis

TOPICS...

- Draper Developments
- Extensions to LED/LENS; the NIKHEF discussions
- Discussions with the CERN alignment/survey group
- MATLAB alignment analysis results
- Exciting things to do

-- J. Paradiso (18-Nov-92)

GEM

LED/Lens @ Draper

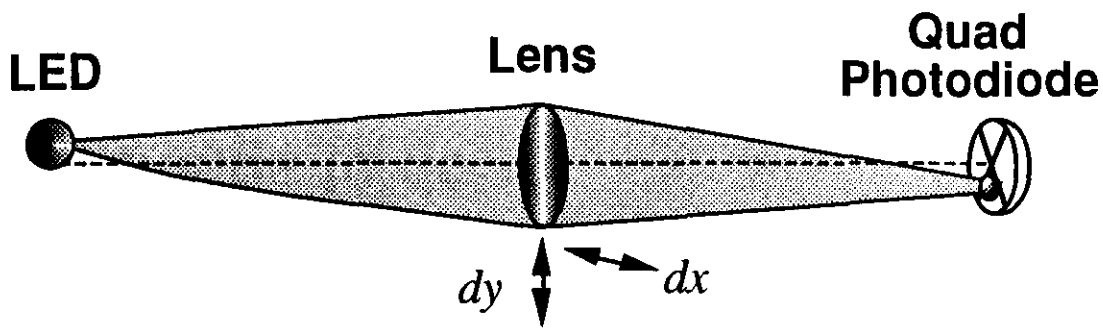

- Developed by Bob Magee at Draper circa 1984 for L3
- Subsequently incorporated into L3 by NIKHEF as the "RASNIK" (Red Alignment System NIKHEF)
- Adapted by Jacques Govignon et. al. for the Harvard drift tubes at SDC

GEM

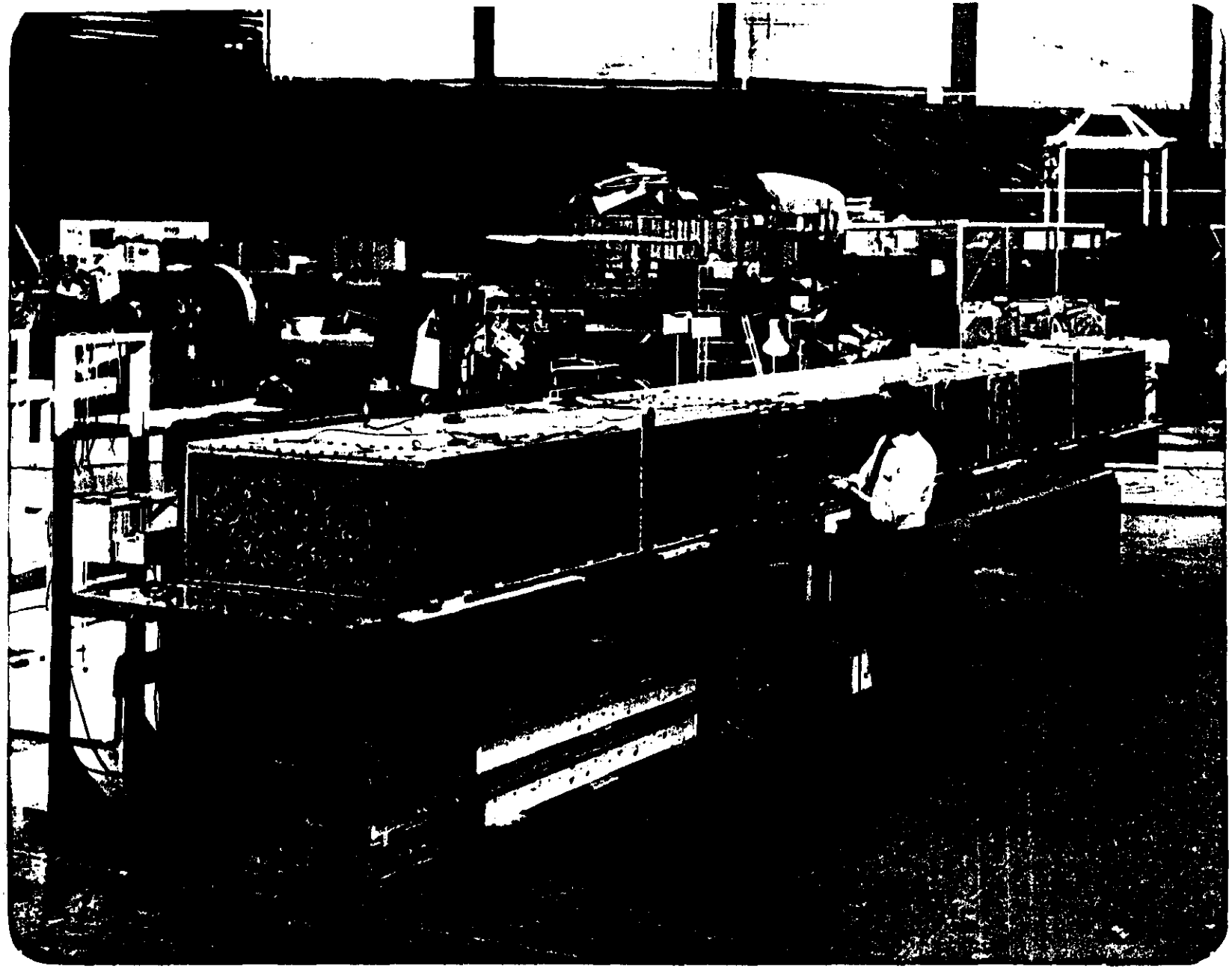

DRAPER LABORATORY
555 Technology Square
Cambridge, Massachusetts 02139-3563

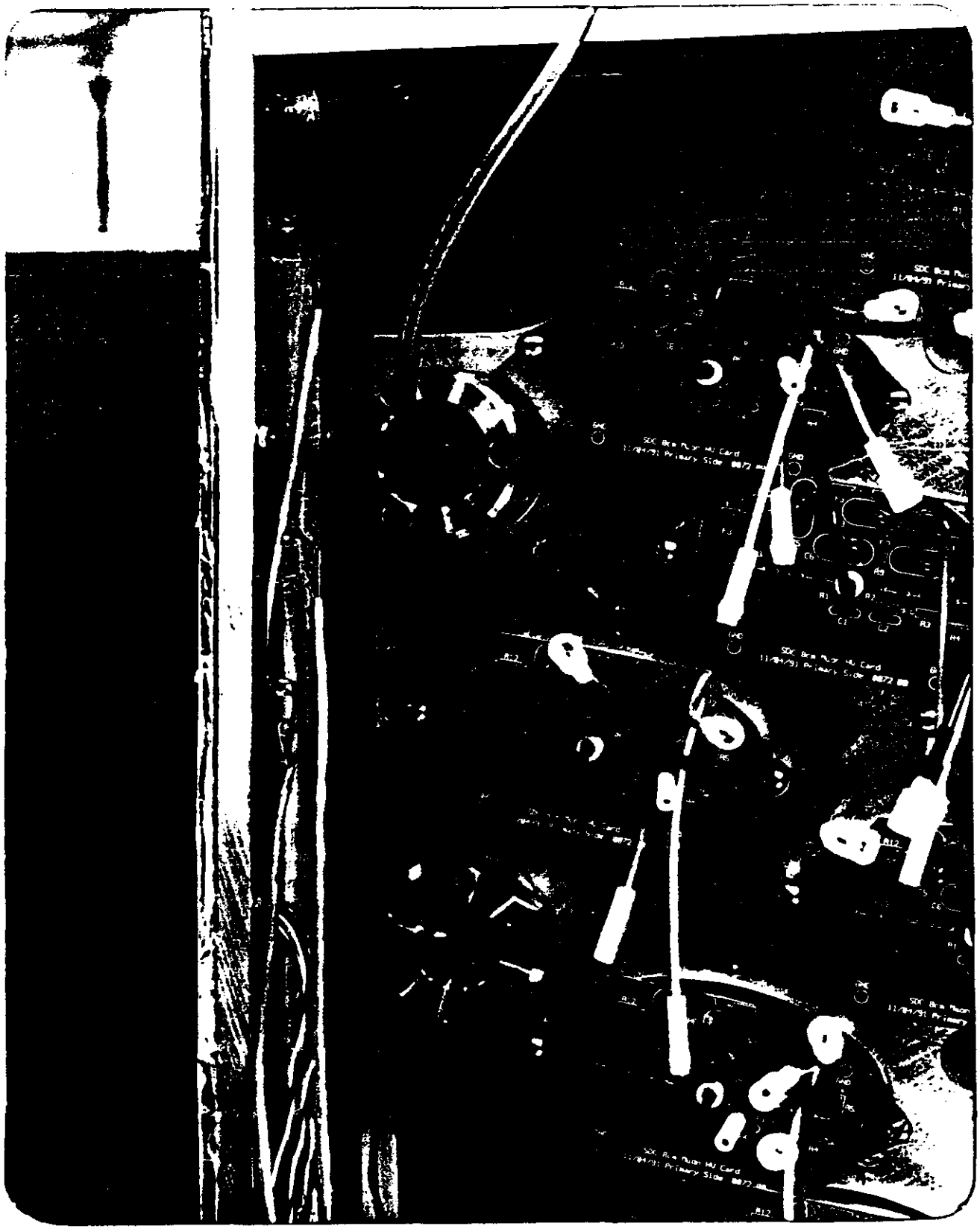

Alignment Fixtures

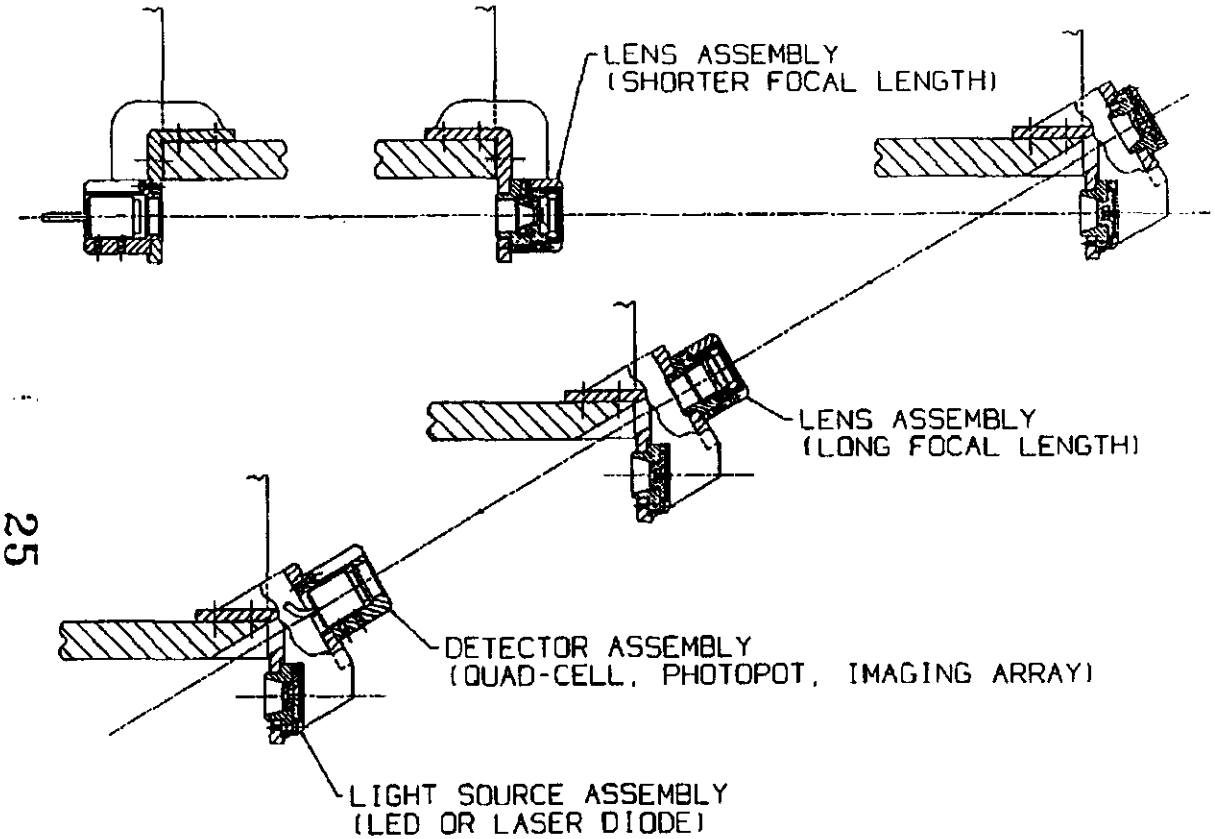

- **LED:**
  Motorola, model #MFOE1102

- **Lens:**
  For the prototype LSDT:
  Melles Griot # 01LMP049
  (f = 1 meter, diameter = 2.5 cm, width = 3.3 mm)
  [This is a meniscus lens, and should fit right into the redesigned fixture]

  For the prototype CSC's:
  (with 1.5" cathode spacing and 4.5" layer spacing):
  Melles Griot # 01LDX049 (f=2.86 cm, diameter=1.27 cm, width = 3.4 mm)
  [This can fit in the same fixture, with the addition of rings to clasp the smaller diameter double-convex lens)

- **Quad Cell:**
  UDT Model SPOT 9DMI

- **SDC element fixtures were adapted for GEM chamber tests**
  - **Engineering drawings made for LSDT's (MIT), and CSC's (BU)**
  - **Drawings in BU shop, waiting for fabrication**
  - ***-> Without LSDT consideration, simplify/streamline for CSC's?***

SDC/GEM Common Interest

- Search for better LED source (brighter, flatter profile).
- Tests beginning on magnetic sensitivity of candidate photodetectors

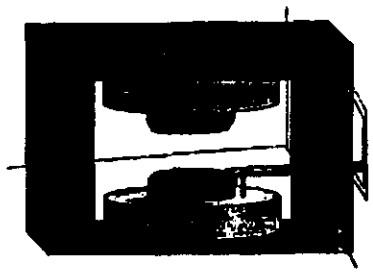

MIT (Bldg. 44) B < 1.5 T

  - MIT Cyclotron magnet used (water tower recently replaced)
  - Quad cells & Lateral effect photodiodes under investigation.
- SDC optical "fencepost" multipoint alignment under development

2 Sets of nested straightness monitors for opposite corners

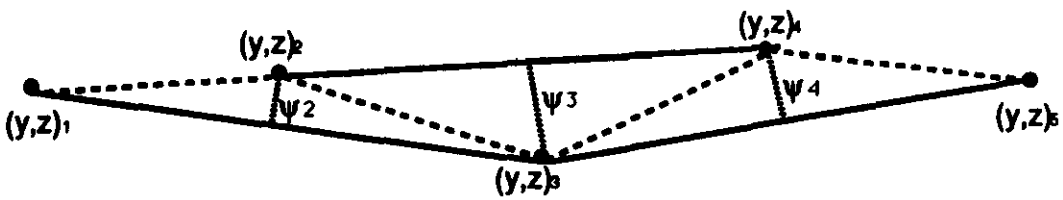

Measurements for one SM string

$$\Delta x = b\,([I] - [A])^{-1} \quad [I] = 5 \times 5 \text{ Identity}$$

$$b = \begin{bmatrix} 0 \\ \psi_2 \\ \psi_3 \\ \psi_4 \\ 0 \end{bmatrix} \qquad [A] = \begin{bmatrix} 0 & 0 & 0 & 0 & 0 \\ \frac{\Delta z_{12}}{\Delta z_{13}} & 0 & \frac{\Delta z_{12}}{\Delta z_{13}} & 0 & 0 \\ 0 & \frac{\Delta z_{23}}{\Delta z_{24}} & 0 & \frac{\Delta z_{23}}{\Delta z_{24}} & 0 \\ 0 & 0 & \frac{\Delta z_{34}}{\Delta z_{35}} & 0 & \frac{\Delta z_{34}}{\Delta z_{35}} \\ 0 & 0 & 0 & 0 & 0 \end{bmatrix}$$

GEM *Unit prototyped for SDC integrating lens and Lateral Effect Photodiode*

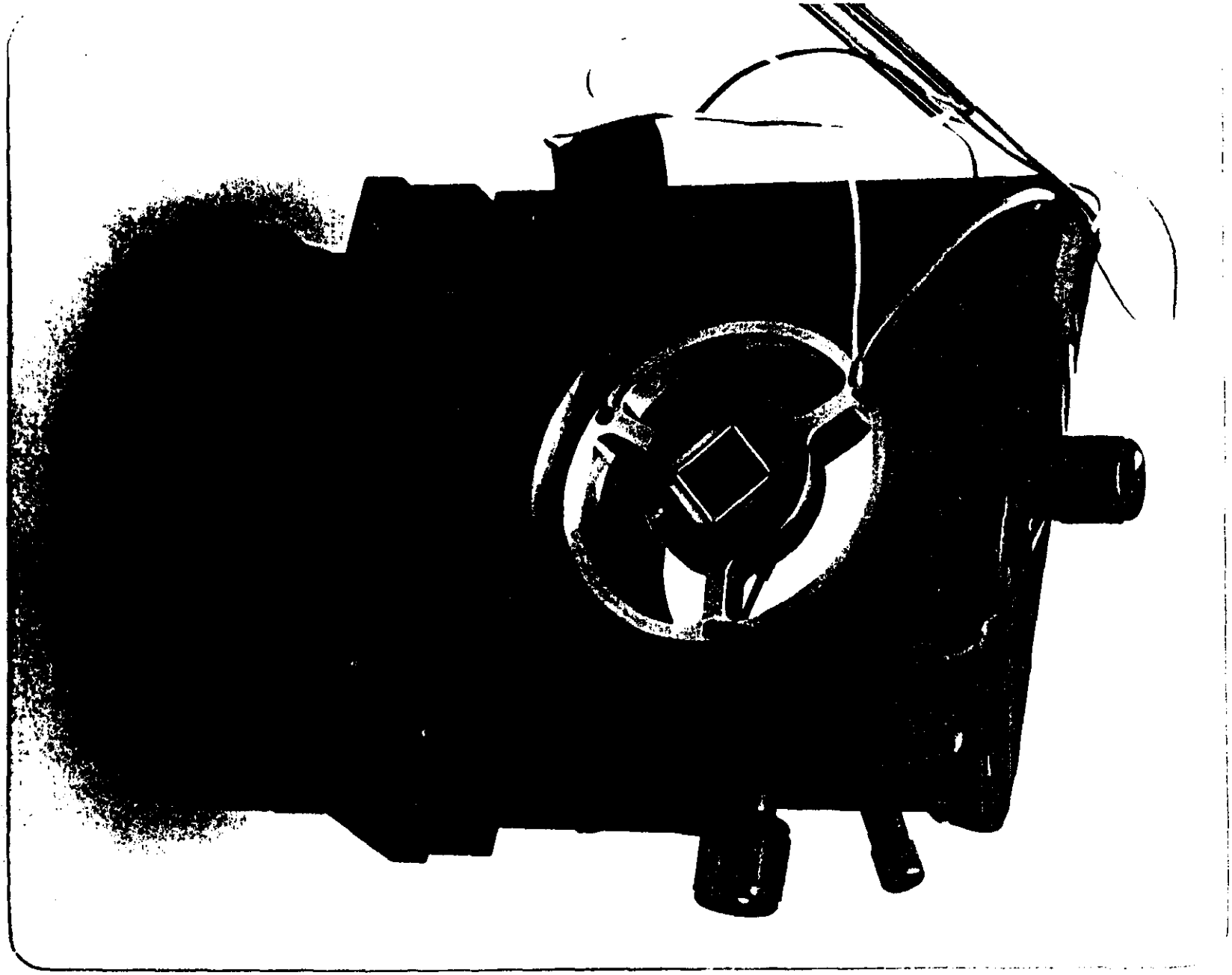

DRAPER LABORATORY

555 Technology Square

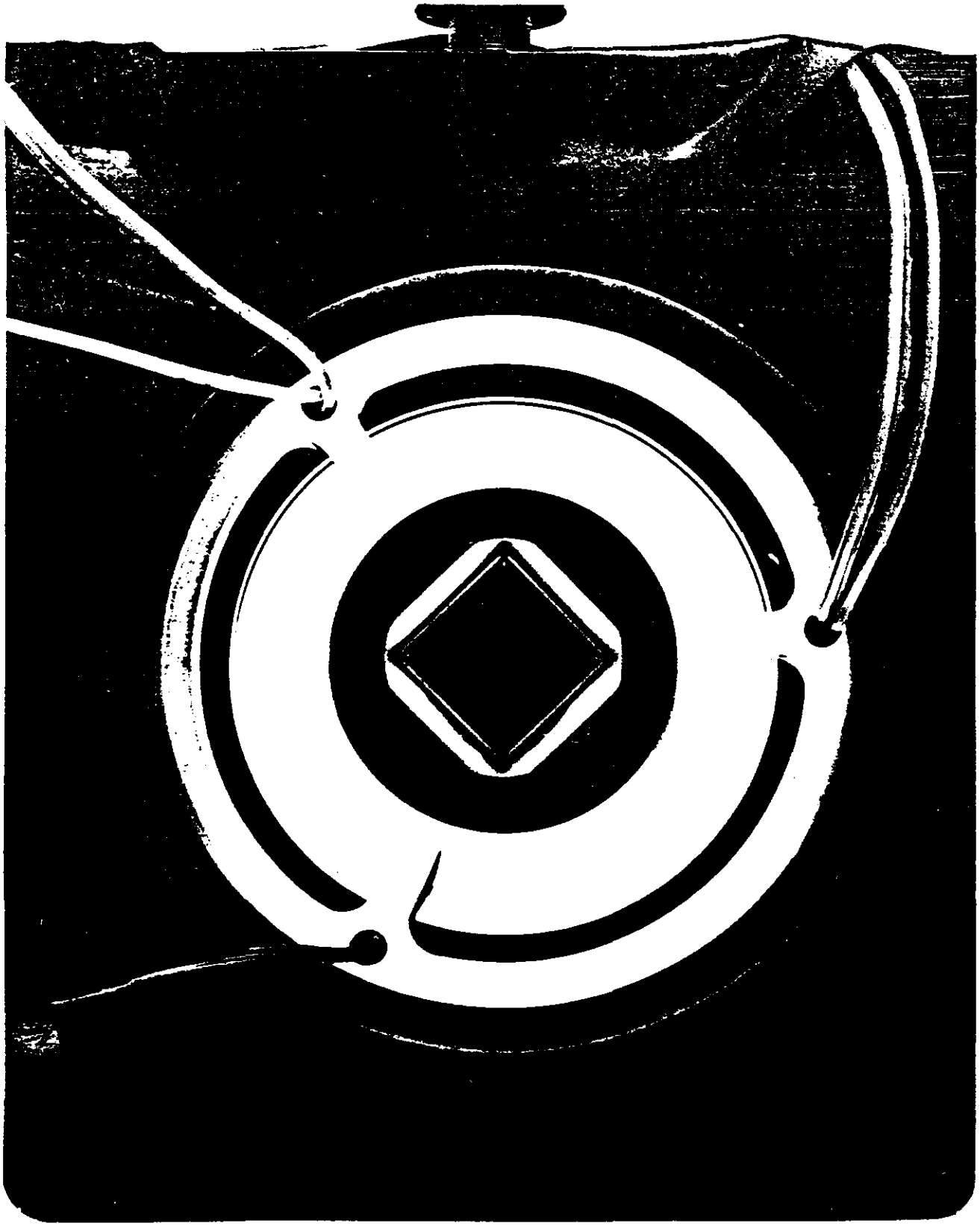

DRAPER

Prototype "Fencepost" Element Data

Voltage as a Function of Corner Cube Translation in the X Direction for 90° Orientation of Cell

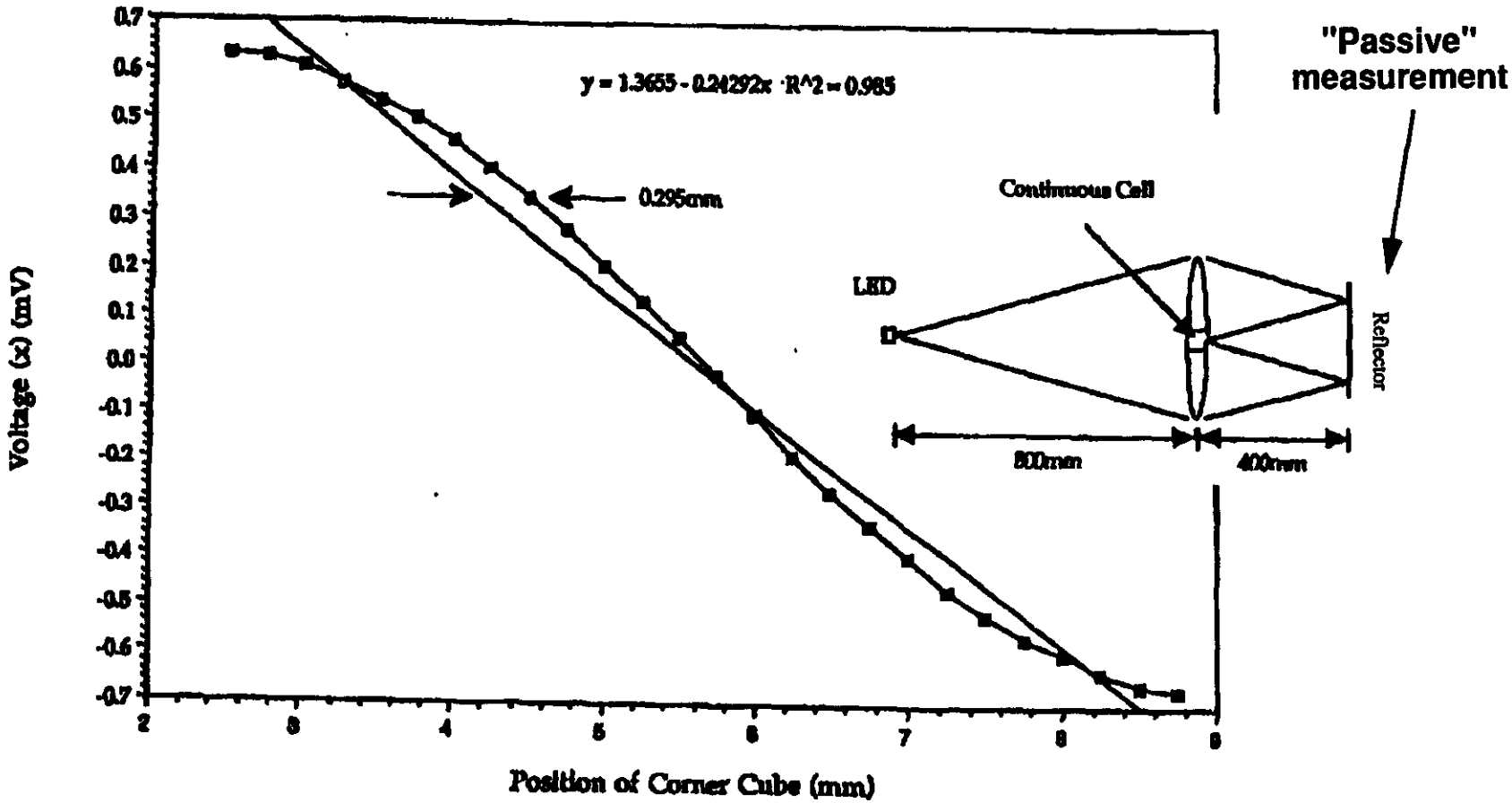

- Courtesy J. Govignon and SDC...

GEM

Homogeneous Light Source results at NIKHEF

- Writeup by W. Post, discussed with Harry VanDerGraff
- Optimize shape of LED diffuser to flatten spatial response:

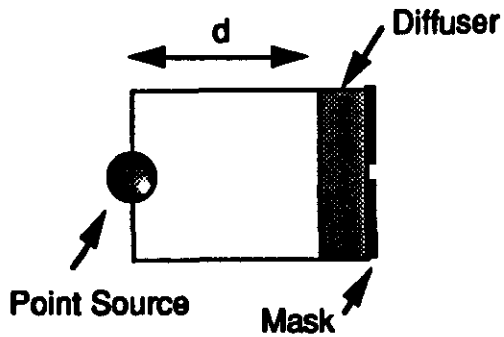

L3 LED arrangement
(had intensity drop @ edges)

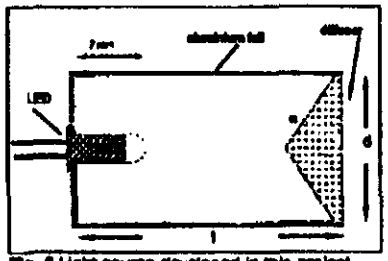

Fig. 6 Light source developed in this project.

Recent tests with shaped diffuser
(LED Lens also sawed off)

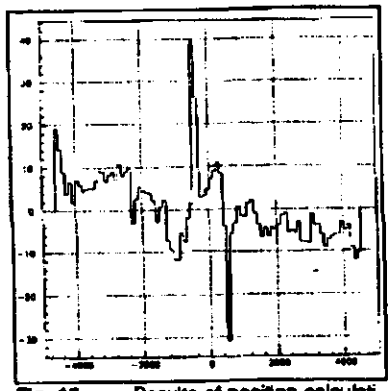

Fig. 15 Results of position calculations after a fit was made.

- Centroid reconstructed to within 40 μm over ±4 mm range
  - Spikes degrade resolution; origin speculated from many sources...
- Detailed reconstruction is 5'th order polynomial
- Coefficients changed with measured position
- Fit depends on spot size, etc...

A Complicated Process...

GEM

Application of CCD

Modification of LED/Lens approach discussed w. Harry VanDerGraff

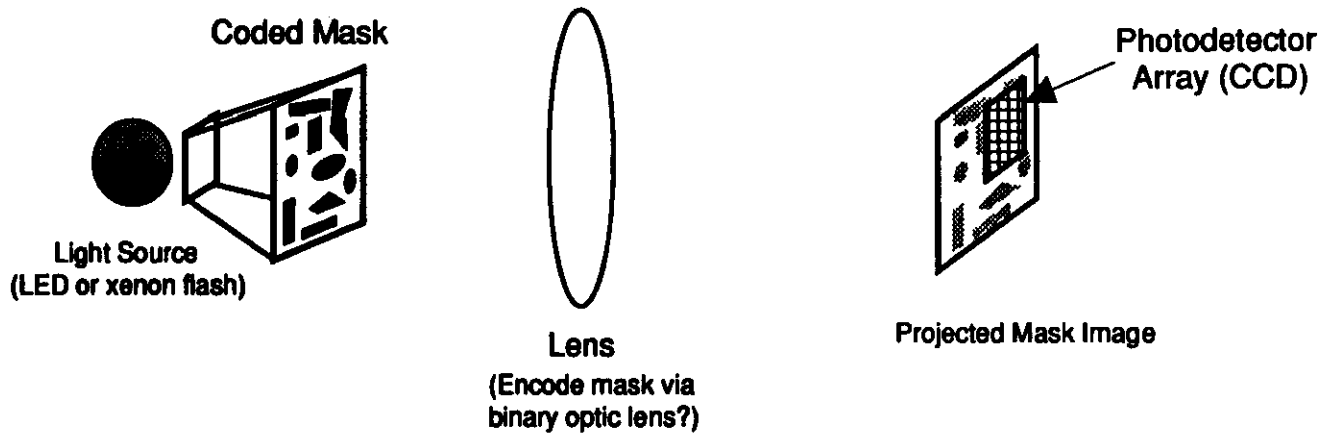

- **Wide dynamic range entails large quad cell or lateral effect photodiode**
  -> Expensive...
- **Image onto 2D CCD array instead of quadrant detector**
- **Project "complicated" image instead of simple square**
- **Projected image is larger than the sensitive detector area**
  - **Do pattern recognition; use information from entire CCD surface**
  - **Can accurately establish detector position within large field**
  - **Use small, commercial-grade CCD from cheap TV cameras**
- **Encode several features in the projected image**
  - **Less sensitive to ambient light, optical gradients & inhomogeneities**
- **Employ binary optic lens to efficiently map smooth LED source into coded image (or use photographic mask behind flash tube?)**

Deployed System

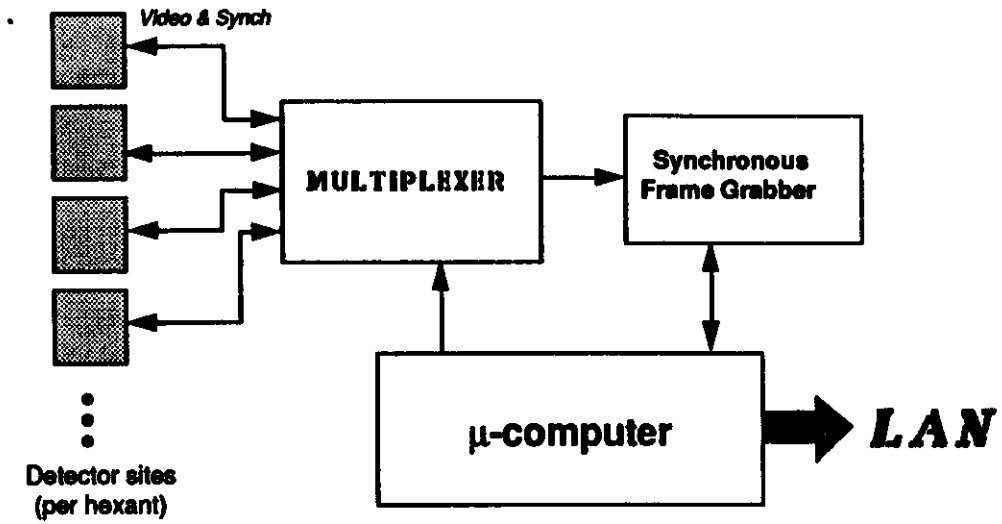

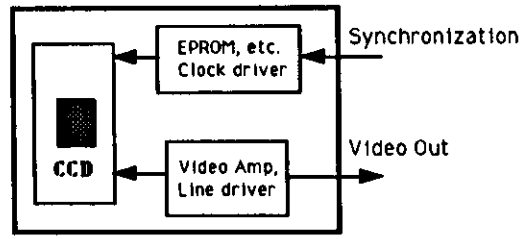

Detector Site

- Minimize hardware at detector sites
  - Need only one μ-processor, frame-grabber per hexant
- Processing is fairly simple; since small image motion expected, 2D autocorrelation provides offsets (plus correction for rotation, scale shift, if necessary).
  - Star trackers for guidance & control; fast updates attained (but not needed here...)
- Must determine best image encoding; dot pattern, "bar code"?
  - Since image not too much larger than array, not difficult...
- Other information available from system
  - Differential rotation between imager & mask, scale shift => (marginal utility?)

GEM

Discussions with CERN Alignment/Survey Team

- Conversations with Christian Lasseur, accelerator dept.
  (Organizing Intl. conference on Detector alignment next fall!)
- R&D Efforts underway to support alignment of proposed accelerators (i.e. CLIC) and LHC experiments (mainly ATLAS at this point).
- Have examined stretched wire and RASNIK/Laser strategies
- Wire effort pursued by W. Coosemans
  - Have set up long-term test in cable tunnel deep beneath ISR
  - Wire is 130 meters long, 500 μm carbon fiber braid is used
  - Extremely stable (wire is unenclosed; hanging in free air)
  - Capacitive sensors; accuracy ≈ 5 μm, range ≈ 8 mm
- Capacitive pickoffs at several points.
  - Sensors made by Fogale (Nimes, France); re-package Capacitec shielded sensor plates
  - 8 capacitive pickoffs per site (2 x 2 differential measurements)
  - Sensors expensive; estimated @ SF 10K per 8-pickoff package (including calibration, precision mounting on jewels, etc...)

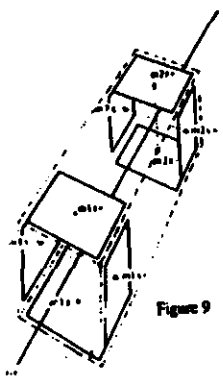
Figure 9

=> Was considered for ATLAS muon system, but now disfavored due to price (≈1000 sensor packages needed!).

GEM

The CERN "Laser Plane"

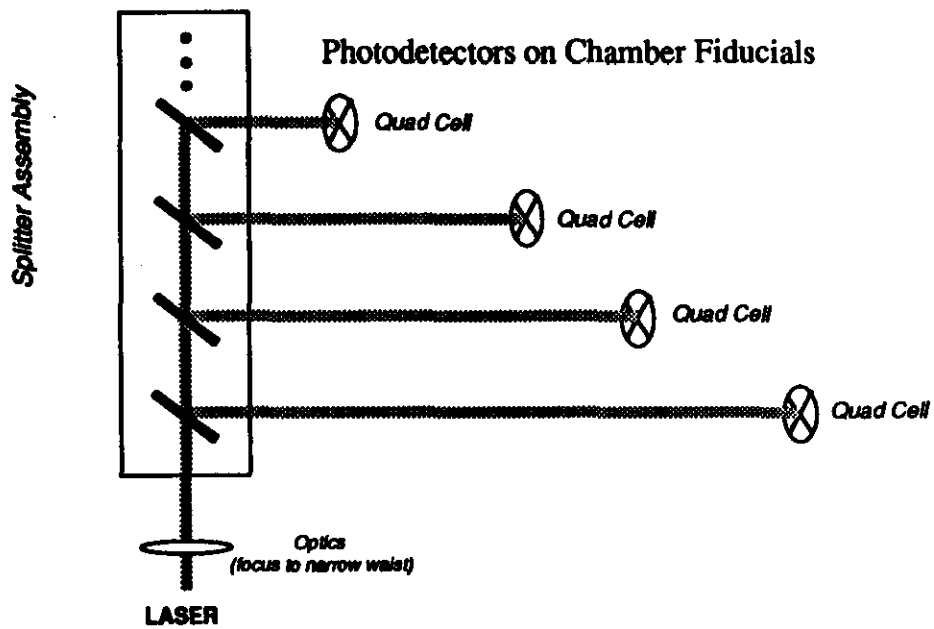

Alternative for multipoint alignment

- **Precision requirements now contained in single "splitter" unit**
  - **Not distributed; i.e. as with splitters at each detector site**
- **Alignment paths not superimposed, as with fencepost concepts**
- **R&D in progress with "Comtrad SA" (St. Genis, France)**
- **Estimated cost to align ATLAS muons this way ≈ 2.5 MSF....**

Tasks (other than writing the TDR, but maybe related...)

- *Work out wide-range CCD alignment scheme*
  - Define suitable mask pattern
  - Put hardware together for test (commercial equipment?)
  - Investigate mask realization
    (binary optics, standard mask & flashtube, etc...).
  - Examine range, resolution, sufficient light, etc.
  - Deployment issues (implementation scheme, costs, etc.)

- *Develop optimal estimator for alignment reconstruction*
  - Fold redundant measurements into reconstructed chamber positions
  - Employ variances of measurements, chamber structural model
  - Optimally (2-norm sense) blend measurements together, i.e. use 2'nd coordinate measurements (perpendicular to sagitta axis)
  - Will resolve ambiguities, increase range of precision reconstruction

- *Evolve and analyze endcap alignment scheme*
  - Still @ "cartoon" level!!

Review of Alignment R&D at Tsinghua University

中国北京
清华大学
电话/Phone: 282451 285451

Tsinghua University
Beijing, China
电传/Telex: 22617 QTHSC CN

To: Prof. Shang, Ren Cheng
SSCL
Fax: (214) 708-6088
请转 Barish 教授。

From: Wang, Jing Jin
Tsinghua U.
Fax: (861) 256-8116

Prof. B.Barish
Caltech
Pasadena, CA

Oct. 23, 1992.

Dear Prof. Barish:

It is my pleasure to inform you that the collaboration between GEM and Tsinghua U. is making steady progress.

- A R&D proposal of SCA/ADC IC's and a proposal of system design for CSC read out electronics have been sent to Dr. Marlow in the end of Sept. Now, we are revising this two proposals according to Marlow's comments. We'll mail you the new proposals when finished.

- A 7x7 Titanium support module for BaF_2 is going to be made by laser welding at Tsinghua U.

- A new design having ± 5mm dynamic range for straightness monitoring follows this paper. It's an additional part of the original proposal of alignment for GEM detector(GEM TN-92-171).

  We would like to invite a GEM people who is in charge of the alignment issues to visit us in the near future. Or alternatively, we send one or two persons to visit SSCL and make sure the detail requirements of GEM alignment.

Best regards,

Sincerely,

Wang, Jing Jin

Wang, Jing Jin
Chairman of the Executive Committee of Tsinghua-SSCL GEM Collaboration
Sporkesman of CGGE-China Group of GEM Electronics

Fax: (861) 256-8116

A New Suggestion For the Straightness Monitor *)

Li Dacheng, Yu Guanzheng
Dept.of precision Instruments
Tsinghua-GEM Collaboration
Tsinghua University, Beijing, China
Fax: (861)-2568116

Oct. 17, 1992.

The straightness monitor is a vital portion of GEM System Local Alignment. According to GEM TN-92-124, the measurement range of a LED/lens is within ±1mm. Using a Quad-Potodiode as a detector, its linear measurement range is about 200μm. For enlarging the dynamic range of the device to ±5mm, we suggest to use a new detector composed of two linear CCD components to instead of Quad-Photodiode--we call it as Cube CCD Detector.

Its structure is as follows:

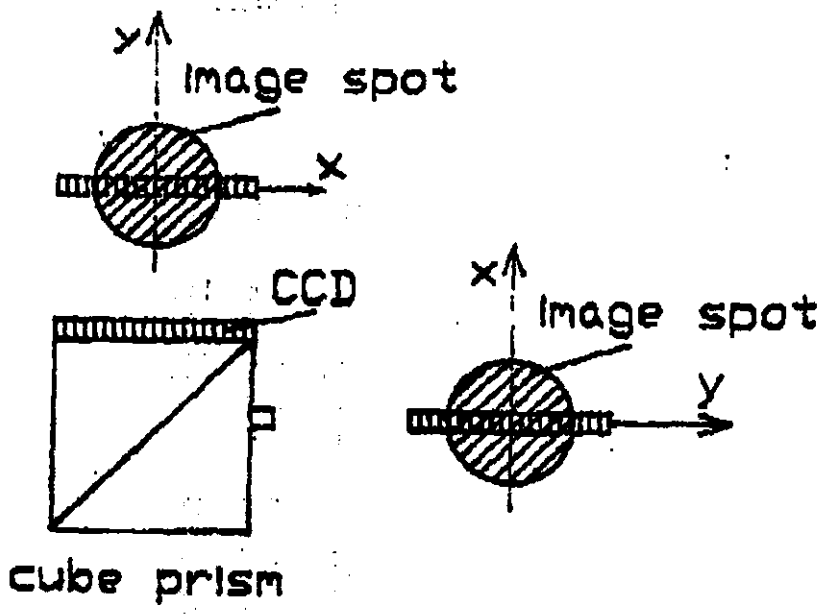

Two linear array CCD components are attached to a cube prism perpendicularly for X.Y 2-D measurement.

Getting ±5mm dynamic range, the diameter of imaging spot should be 15mm, size of linear CCD should be 2048 pixels.

For such a Cube CCD Detector:

The measurement range reached 10mm, the resolution is 1μm, the size is 30x30x30(mm), and it costs roughly $500.

---

*) An additional part of " The Proposal of Alignment for the GEM Detector " (GEM TN-92-171).

Date: Aug. 25, 1992

The Proposal of Alignment for the GEM Detector

Li Dacheng, Liang Jinweng
Yu Guanzheng

Dept. of Precision Instruments
Tsinghua-GEM Collaboration
Tsinghua University, Beijing, China
Fax: (861)-2568116

1. About Straightness Monitor:

According to (GEM TN-92-120), its accuracy is 10 μm, measuring range 100 μm, measuring distance 10 m.

This 3-point monitor uses principle of optical imaging. For a multipoint straightness alignment, it should be implemented by leapfrogging several sets. The practical accuracy is limited by off-focus and complex mechanical mounting components.

We suggest using LED alignment system researched by our department as an alternative(see ref.2). For this system, the accuracy is 10 μm/10 m, measuring range 15 m, the dynamic range of detector is 1 mm. With this system, the off-focus error may be avoided, and the mechanical mounting components could be simpler than before.

The straightness monitor can ensure straightness among the relative points of layers, but cannot ensure alignment between layers and IP.(Fig.1)

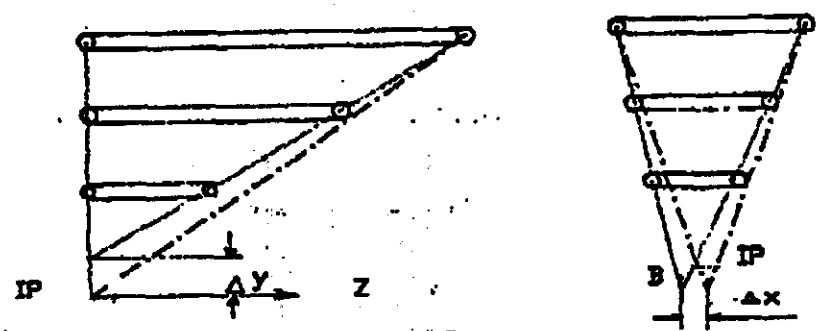

Fig.1

2. Laser Alignment:

The failure of straightness monitor for alignment(between layers and IP) could be avoided by Laser Alignment. The accuracy of 5 μrad could be satisfied by using a Laser Scanning Aligner researched by our Department.

Laser Scanning Aligner: Laser beam can be rotated around X and Z, the rotating angle can be read out precisely (Fig.2). Using a special optical system, a high accuracy of alignment in bending direction will be obtained.

For a multipoint alignment demand, systemic error due to detector refraction can be compensated. This method has been adopted in a 30 meters hole-hole multipoint alignment system developed by our Department, its accuracy reached 15 μm/5 m.

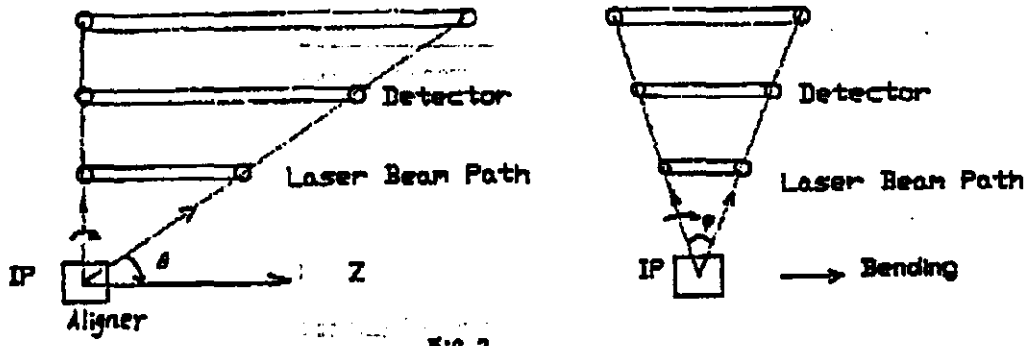

Fig.2

Laser alignment does not measure S_1, S_2, S_3 (fig.3). Solving this problem, parallel between layers should be ensured first. An instrument for parallelism-perpendicularity measuring researched by our Department can be used to reach this goal. It also can serve for alignment in a layer of chamber.(see ref.3)

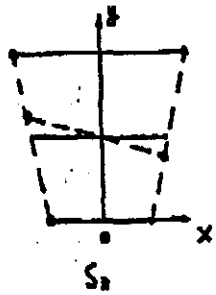

Fig.3

3. Approaches for MUON system setting:

OPTION 1: Separating the lattice into 16 hexant blocks, precisely set for every block then assemble them into a barrel and an endcap with laser alignment. Since a special apparatus can be designed for a block setting at first, the high accuracy of alignment between layers and in a layer can be achieved, so that it will be simple for the global alignment. But setting for global may be difficult when a hexant block of lattice is deformed in the processing of setting.

OPTION 2: Constructing the lattice as a barrel and an endcap at first, fixing, measuring and aligning chamber layers in them.

This approach is convenient for global setting, but much complex for alignment and measurement. To satisfy local and global alignment requirement, straightness monitor(for local alignment), laser alignment(for global alignment) and an instrument of parallelism-perpendicularity measurement(for parallelism between layers) should be used sequentially.

A light source(laser for example) should be set at IP for both of approaches, 5 μrad of rotor accuracy can be achieved if the technique and instruments of our Department are adopted.

BACKGROUND

PRECISION INSTRUMENTS DEPARTMENT, TSINGHUA UNIVERSITY.

The Large scale dimension measurements have been researched for ten years. in our department. In the period We accepted financial support of 1 million USD from UNDP and achieved many successful results. The major achievements are as follows:

1) CCD laser alignment technique.
2) Optical alignment system based on optical activity.
3) LED optical alignment system.
4) The instrument for measuring parallelism and perpendicularity in large dimension.
5) Quartz crystal tuned He-Ne dual frequency laser for long distance measurement.
6) Equipment for measuring coaxiality of holes at long distance apart (30M).
7) Equipment for measuring the flatness of joint surface of turbine machine.
8) Roundness and cylindricity in-situ measuring system for large shafts.
9) In-situ equipment for measuring flatness of large mirror plates.
10) Technique of absolute distance inteferometry with 3.39μ dual wavelength He-Ne laser.
11) Research in infrared digital inferferometric system for measuring flatness of large plane.

Most of them have been applied to industry. Item 1) - 4) included will be very helpful for alignmet in SSC.

Two—dimensional Automatic Straightness Measurement System Based on Optical Activity

Our research group has been involved with an alignment technique based on optical activity since 1983. Within six years the important technique problems (portable Faraday rotator and driver, signal processing, automatic readout method and circuits) were solved . Our prototype instrument is easy to operate , can be applied to uncontinuous measurement, and can be used in industrial environment. Its accuracy is equivalent to a dual-frequency interferometer, but the adjustment is much easier.

The optical system is shown in Fig. A Glan-Taylor prism with two outputs served as the polarizer, causing the laser beam to split into two beams with an extinction ratio of 10^6. A modulating and compensating Faraday cell was placed in optical path. Modulation was driven by a sine wave generator and amplifier in series resonance. The position-sensitive device (No. 7) consists of three pairs of left-handed and right-handed quartz wedges. The pair in the middle is for x-direction measurement. Two pairs of sidepieces are for the y-direction function. The light vibrations are rotated by different amounts according to the portion of the wedge through which they passed. Laser beams go through a 1/4 waveplate and cat-eye system and then come back in parallel through the wedge again. The sensitivity is enhanced twice. When the wedge has a lateral displacement of S, the orientation of polarization should be rotated by an angle:

$$\Phi = 4A\tan\delta S$$

where A is the activity coefficient of quartz at about 18° /mm and δ is wedge angle at 1° of arc. Analyzers (Nos. 12 and 14) are placed orthogonally with a polarizer.

Measuring range : 30 m **Resolution** : 1 μm **Accuracy** : 30 μm/30m

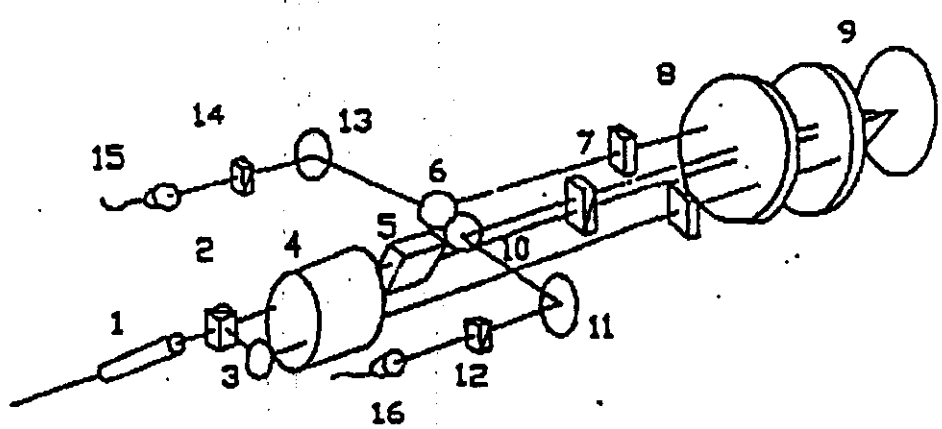

Fig. Optical System

1. beam expander 2. polarizer 3. 6. 10. 11. 13. mirrors 4. Faraday cell 5. prism 7. quartz wedges 8. 1/4 waveplate 9. cat-eye 12. 14. analyzers 15. 16. photodetector

LED Optical Alignment System

Working Principle:

Two light emitting diods are respectively drived with two square wave signals with phase difference 180 degrees and emit light beam alternatively. After reflection on a prism surface, the beams from the two LEDs become two parts symmetrical about the prism and are emited through the collimating lens. The receiver consists of the receiving lens and the photoelectric cell. When axes of the receiving lens and the emitting lens (collimating lens) become coincident, light intensity of two beams from two LEDs is same on the receiver, $I_1=I_2$, as b in the diagrame. The instrument become aligned. When the receiving lens is up, $I_1>I_2$ (Fig. a) and down $I_1<I_2$ (Fig. c), alignment deviation is measured by comparing I_1 and I_2.

Accuracy: 10 μm/10m

Resolution : 2 μm

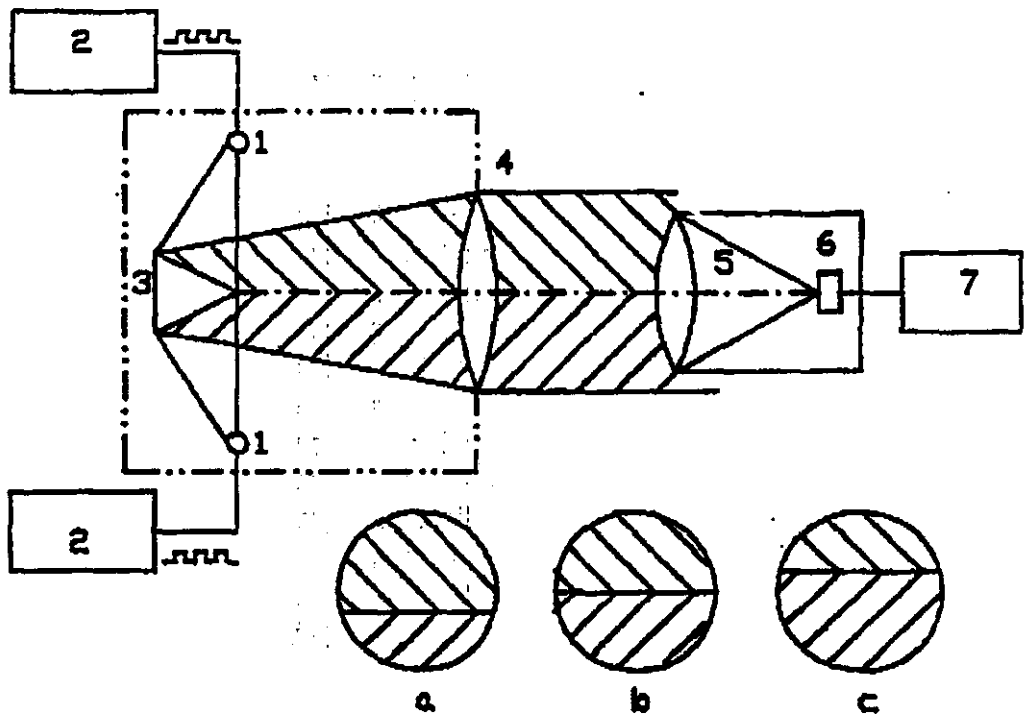

Configuration:

Emit Unit : 1. Light Emitting Diodes LED1 and LED2 2. LEDs' Square Wave Drivers 3. Prism 4. Collimating Lens

Receiving Unit : 5. Receiving Lens 6. Photoelectric Cell 7. Signal Demodulator

An Instrument for Measuring Parallelism and Perpendicularity in Large Dimension

A. This instrument is suitable to measuring parallelism and perpendicularity of some surfaces of large workpieces or during assembling large machines and equipment. Measurement range is ten to twenty meters. Measurement accuracy is better than 4×10^{-6} L, here L is measurement distance. Measurement range of the detector is ten millimeters. Detector resolution is one microns.

B. Measurement Principle and Configuration

A stable alignment laser beam is employed as a measurement datum line. The datum planes parallel or perpendicular to each other are established by turning a pentagonal prism. Comparing surfaces under test with the datum planes, flatness, parallelism and perpendicularity between surfaces are measured. Height deviation between every measuring point and corresponding point on the datum plane is directly measured with a CCD probe and processed by PC computer. Measurement data processing is simple and the instrument is easy to operate. The system is not only suitable to measuring large workpieces, but also to assembling and positioning large machines, ships and buildings.

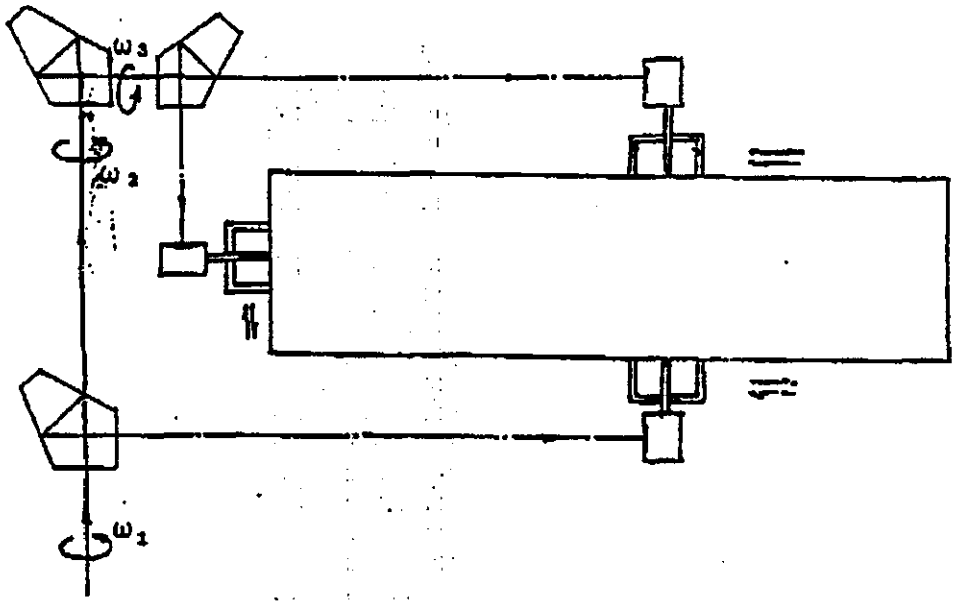

E. Ables

High Range Sensors at LLNL

Stretched Wire Capacitance Detector

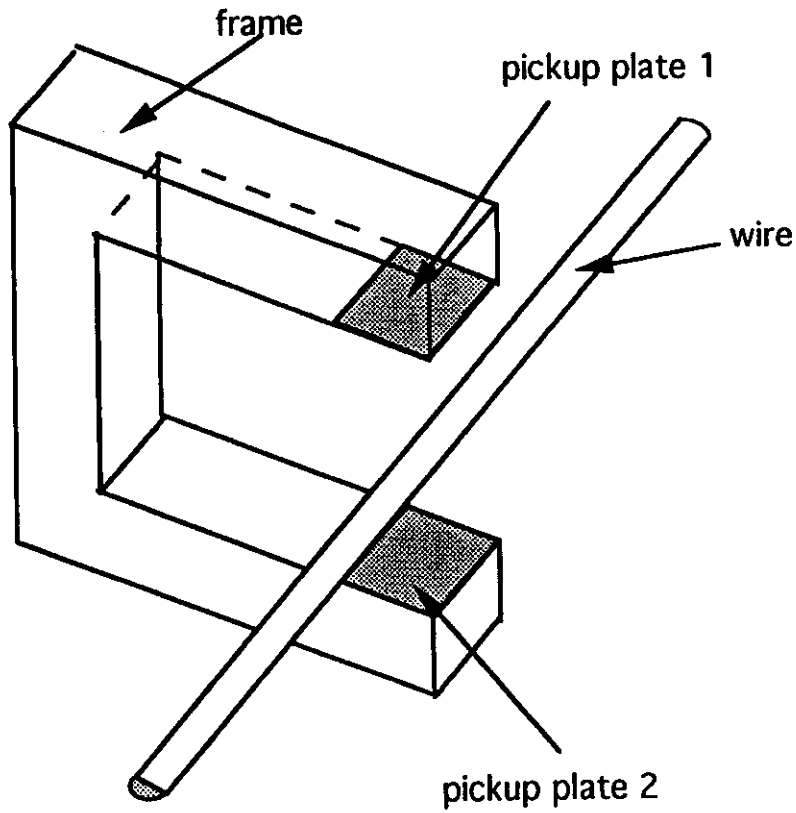

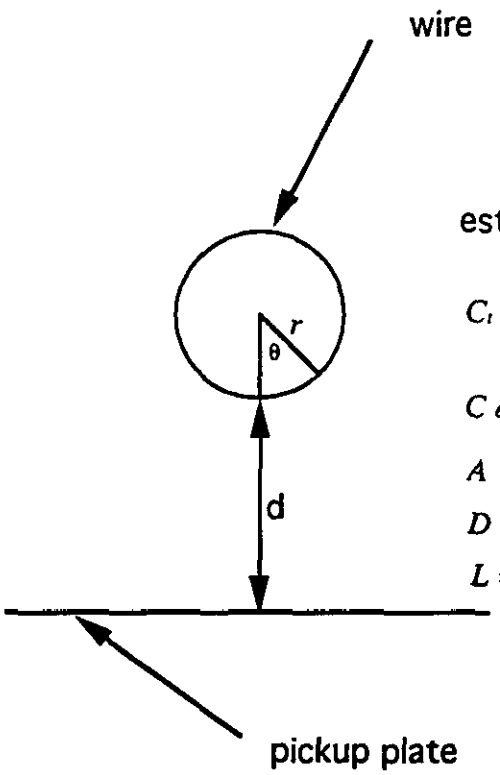

estimated capacitance

$$C_t = 2 * \sum_{\theta=0}^{\pi/2} C_\theta$$

$$C_\theta = \frac{\varepsilon A}{D}$$

$$A = L * r * (\sin(\theta) - \sin(\theta + 0.0175))$$

$$D = d + (\cos(\theta) - \cos(\theta + 0.0175))$$

L = plate width (1 cm)

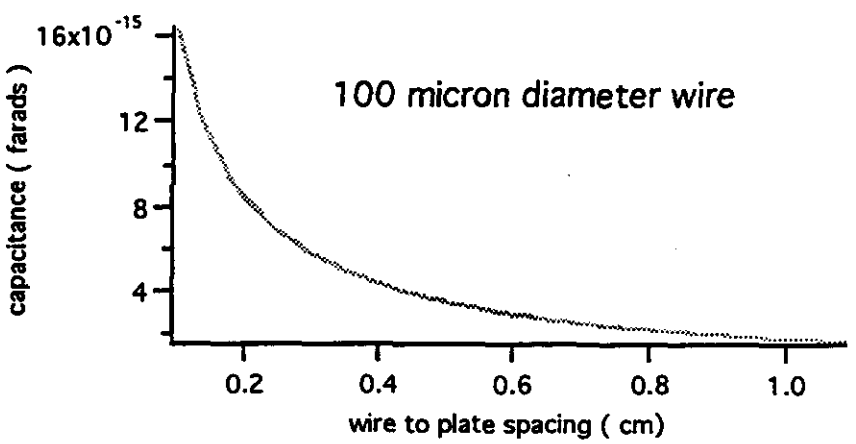

Error in Position Reading For One Plate For 25 Readings

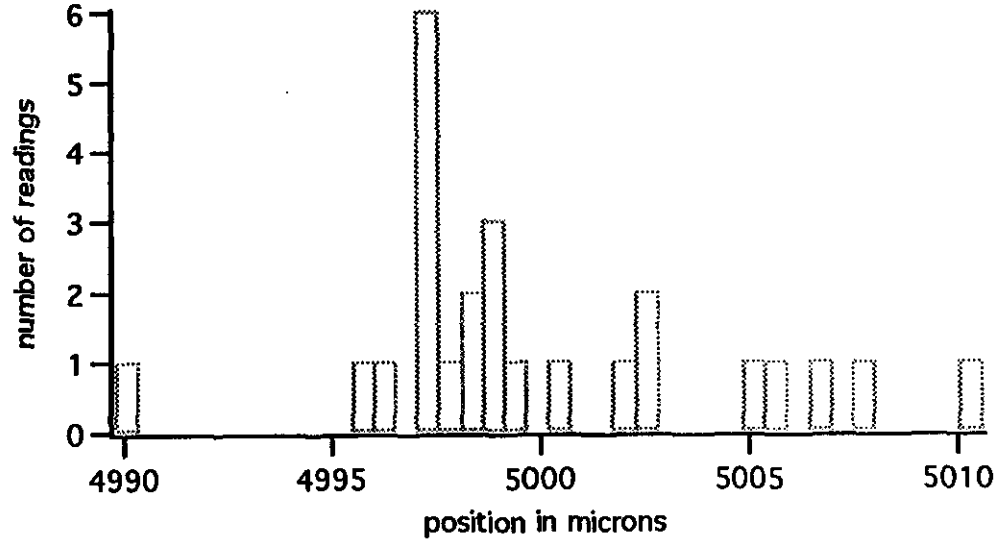

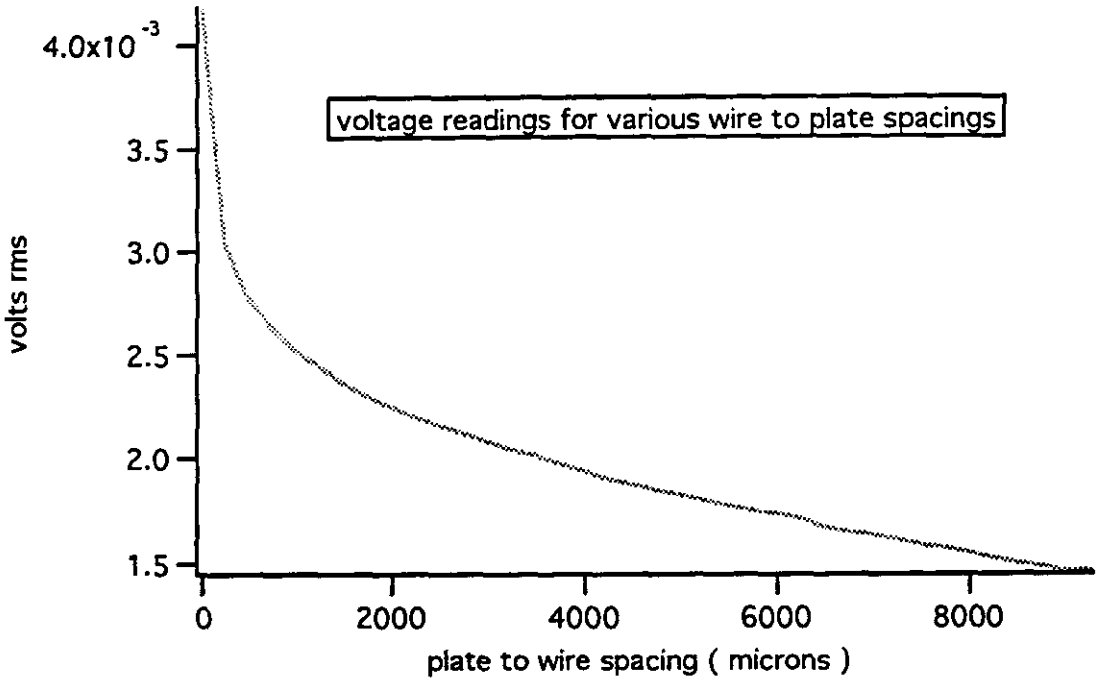
voltage readings for various wire to plate spacings
volts rms
4.0x10^-3
3.5
3.0
2.5
2.0
1.5
0
2000
4000
6000
8000
plate to wire spacing (microns)

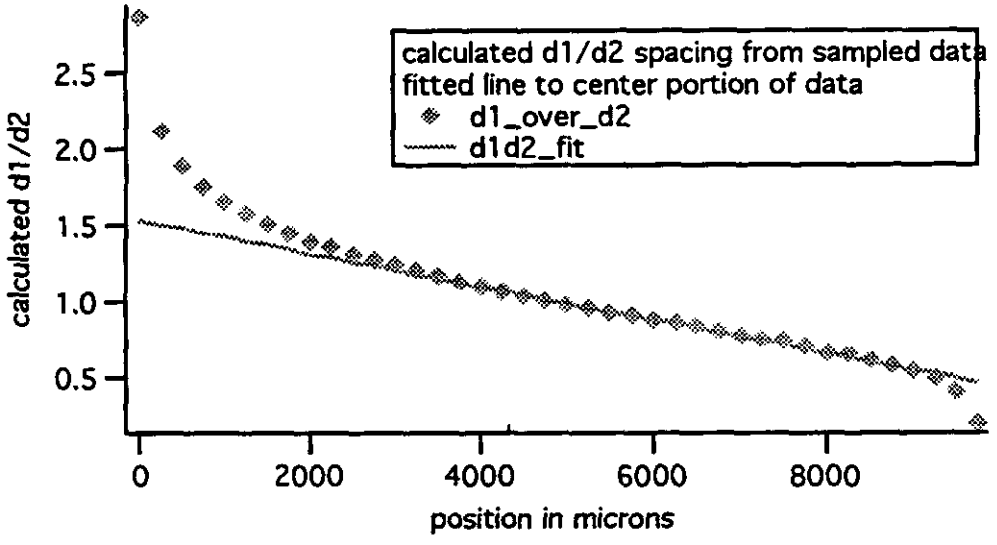
calculated d1/d2 spacing from sampled data
fitted line to center portion of data
d1_over_d2
d1d2_fit
calculated d1/d2
2.5
2.0
1.5
1.0
0.5
0
2000
4000
6000
8000
position in microns

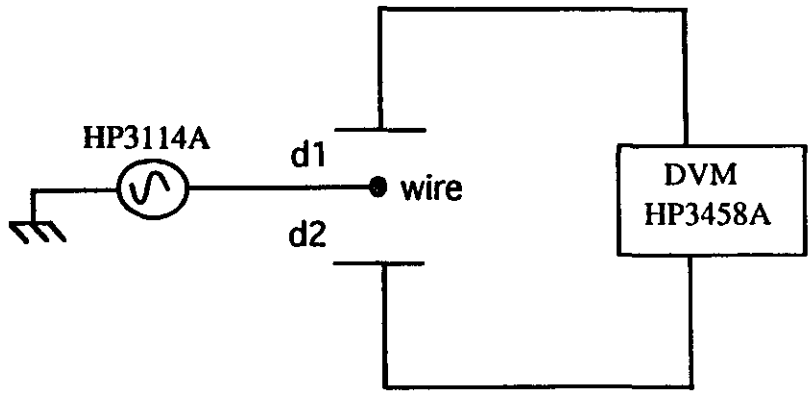

$$\frac{V_1}{V_2} = \frac{V_a \cdot \dfrac{Z_m}{Z_m + Z_1}}{V_a \cdot \dfrac{Z_m}{Z_m + Z_2}} = \frac{Z_m + Z_2}{Z_m + Z_1} \propto \frac{C_1}{C_2} \propto \frac{d_1}{d_2}$$

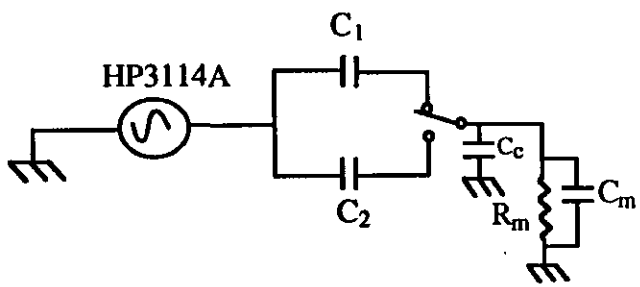

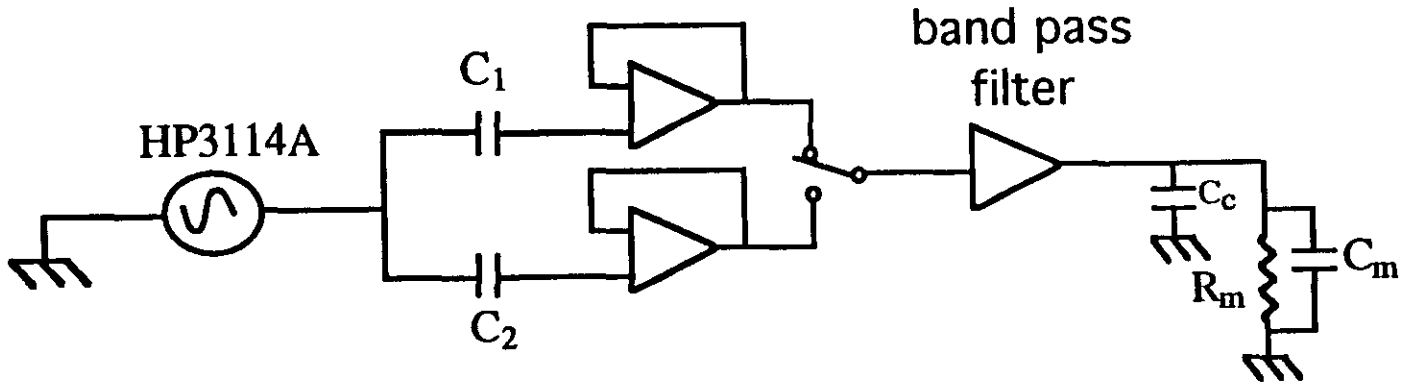
HP3114A
C_1
C_2
band pass
filter
C_c
R_m
C_m

What has been accomplished

A wire detector has been built

Plastic frame

32 mil copper wire

Measurements indicate detector behaves as predicted

noise appears to be 25 microns

Future Planned Tasks

Build a temperature stable detector

Design and build readout electronics

Build data acquisition system

Build 10 meter test bed

Questions

Can the noise jitter be reduced to < 10 microns?

What is the temperature stability?

What noise problems are encountered in long wire system?

What is the detector to detector coupling?

What are the acoustic coupling problems?

What is the cost/detector?

What are the total system costs?

Costs

3 FTEs for 6 months

$20K — electronic equipment

Transparent Photodiode

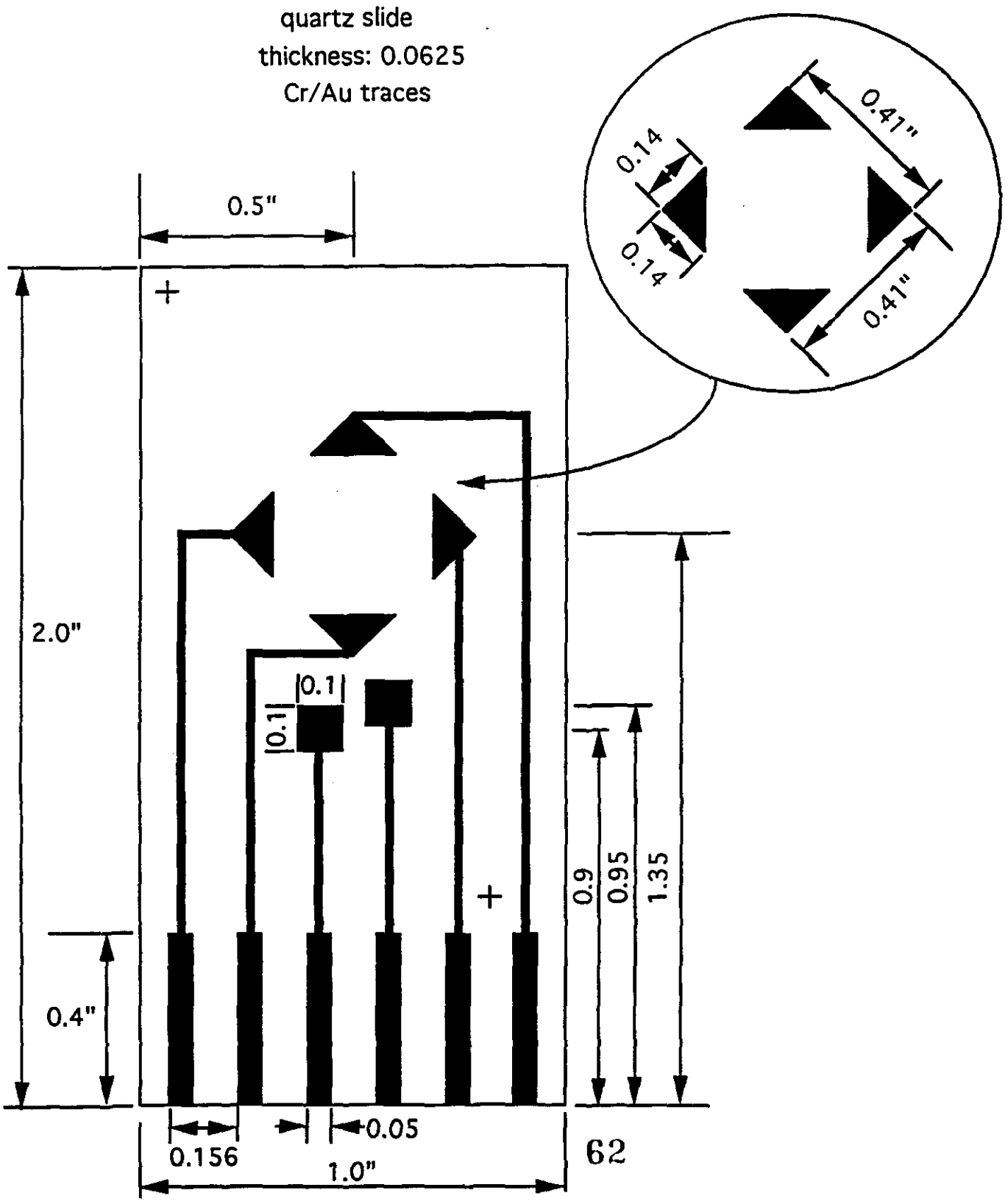

2-D Position Detector Readout Electronics

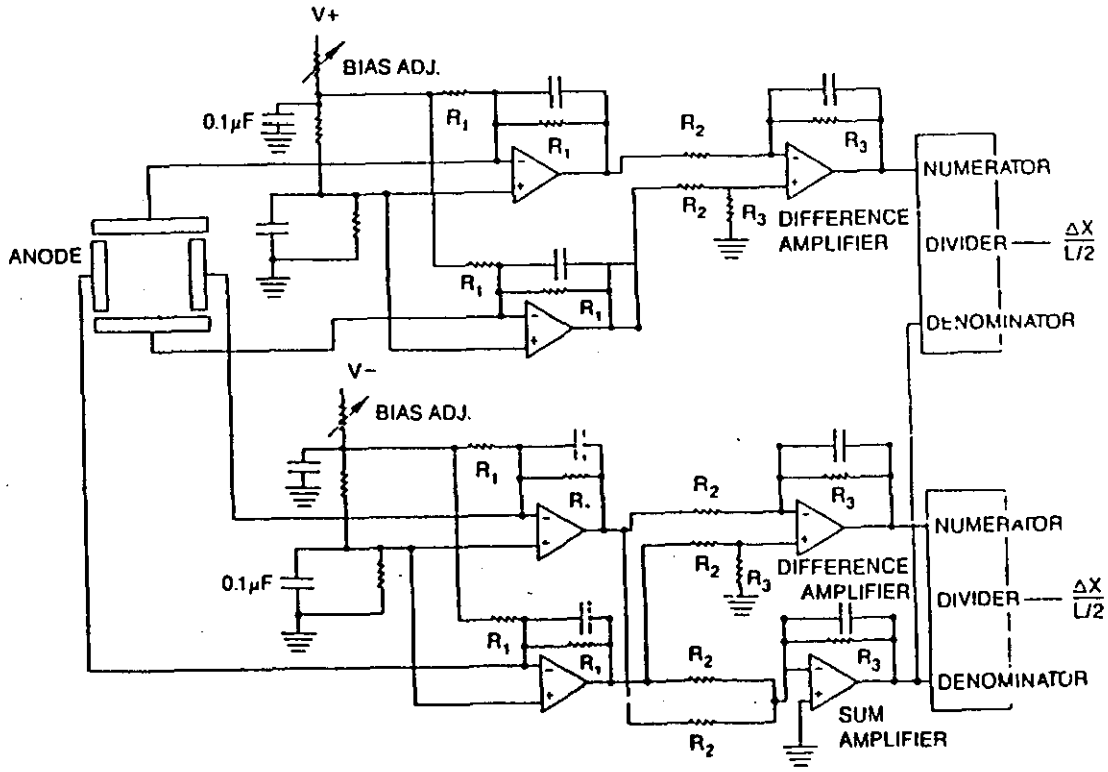

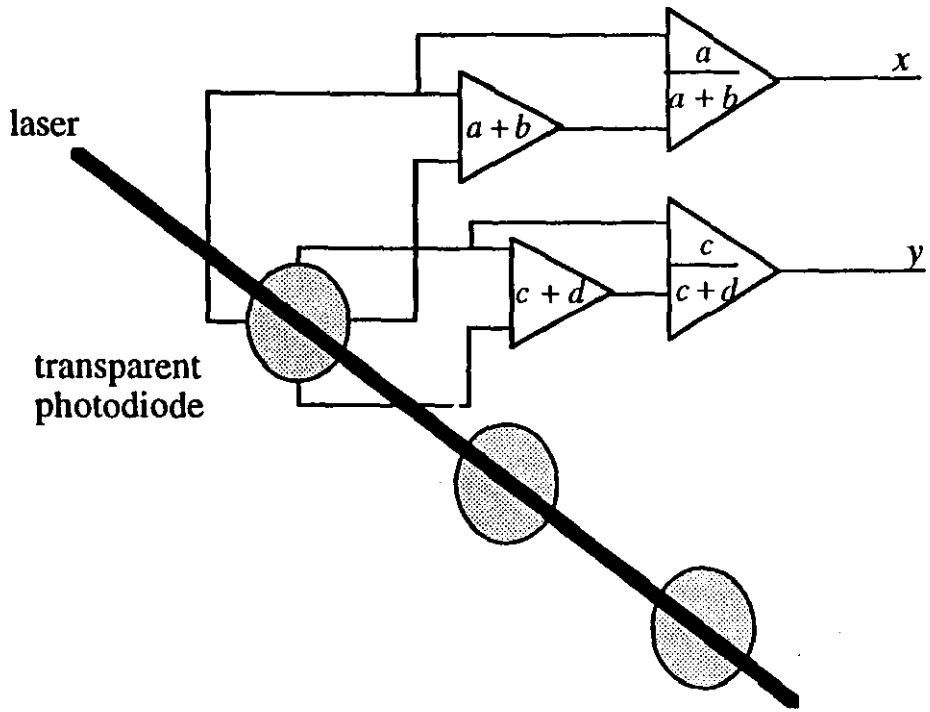
laser
transparent
photodiode
a + b
c + d
a
a + b
c
c + d
x
y

What has been accomplished

Two photodiodes are in the process of being made for 1060 nm light

Future Planned Tasks

Measure

Transmission coefficient

Position resolution

Position linerarity

Position jitter

A. Korytov

Multi-point Alignment Schemes

11/18/1992

A. Korytov
M.I.T.

STRETCHED WIRE:

HIGH RANGE + HIGH ACCURACY

(JUST AN IDEA)

1. Why should we consider multi-point schemes?

– To exclude θ-gaps in the Barrel.

2. Does it work in frame of the projective alignment approach?

– Yes. (LSDT-type scheme, A. Ostapchuk

3. What's bad about a stretched wire

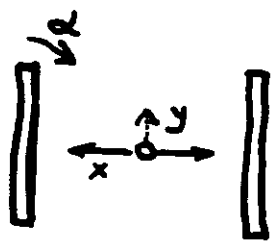

× range ~ 10 mm
× accuracy ~ 10 μm

10^{-3} accuracy

(calibration!,
non-liniarity!,
requirements on y, α!,
noise)

4. What could we do with that?

(*) 2 sensors $\longrightarrow$ 20 sensors

This relaxes requirements:

$10^{-3} \rightarrow 10^{-2}$

(*) noise is not a problem;
it can be killed by statistics

5. IDEA:

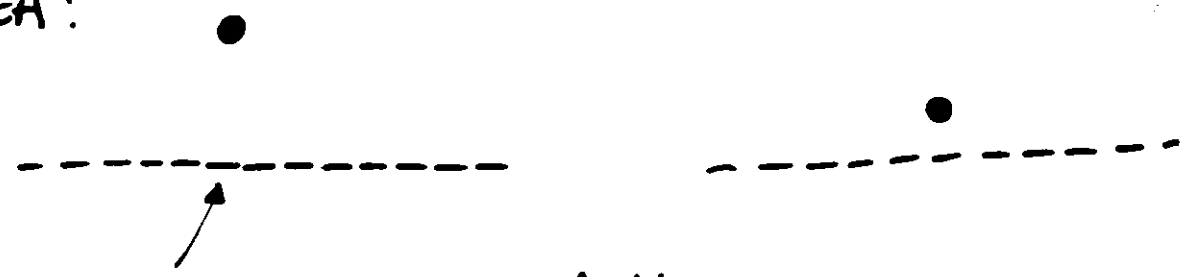

1mm strips, 20 of them

1) Error due to calibration error:

$$\delta x \sim \sqrt{\frac{N/2}{6}} \cdot \varepsilon \cdot a \sim 10\,\mu m$$

for $\varepsilon \sim 1\%$

2) Distribution width give y displacement

3) Should not be sensetive to y in wide range.

4) So nice for CSC's:
alignment "microstrips" on the same board as major strips $\Rightarrow$ no transfer points.

R. Sawicki

Laser/Lens R&D at LLNL

Laser alignment monitors

- Inspiration for considering laser alignment monitors came from the apparent need for multipoint sensing
  - PAS strategy may obviate need for multipoint sensing
  - LED/lens monitors are preferred for 3 point monitors
    - less expensive and simpler

- Potential appplications that remain
  - redundant alignment system
    - backup for failed PAS
    - data corroboration
  - global position monitor

- Laser testing at LLNL has shown that sub 25 micron measurment accuracy is achievable at 12 meters distance
  - two important concerns
    -- pointing stability of the laser
    - air turbulence (also relevant to LED/lens performance)

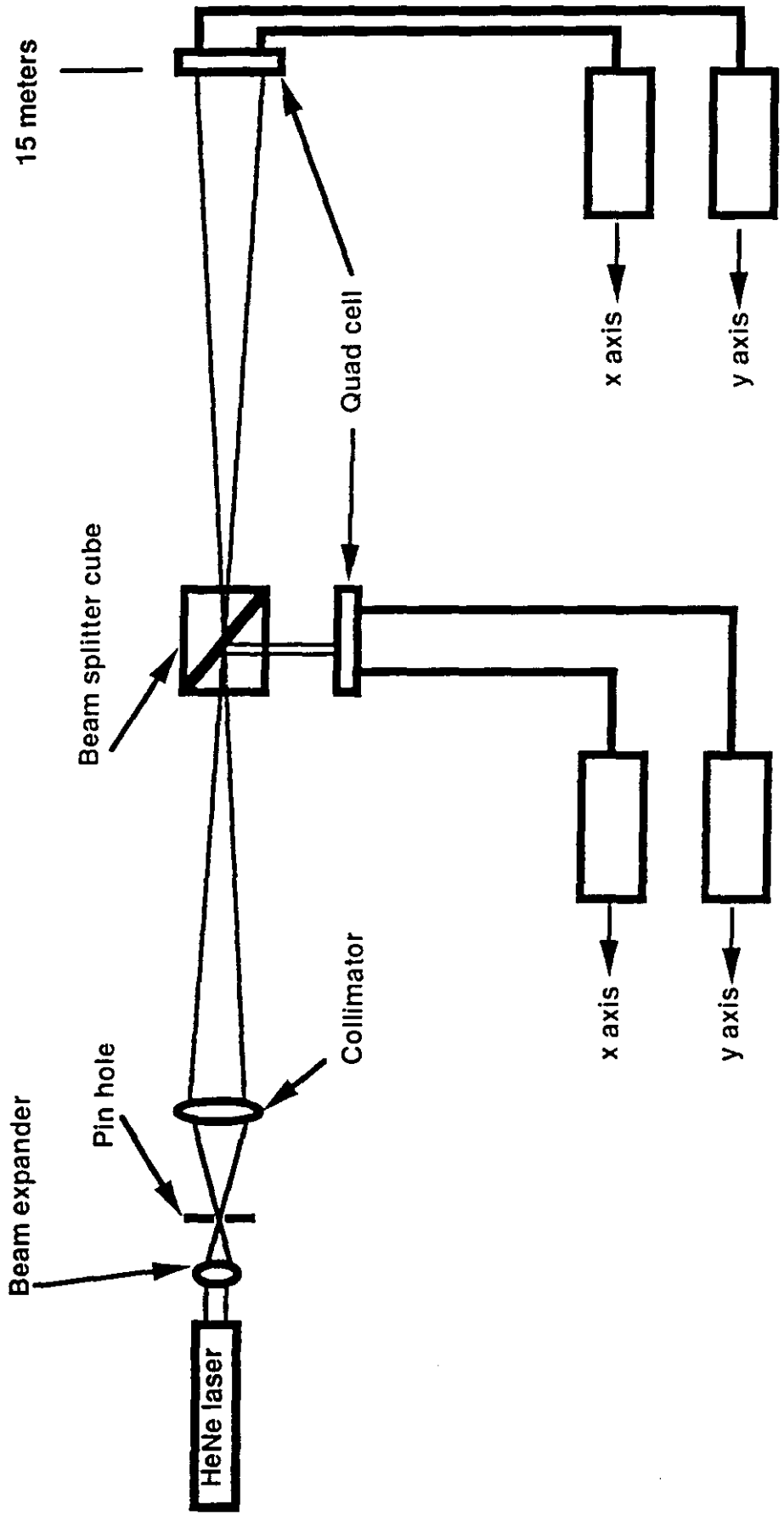

Figure 2. Test setup

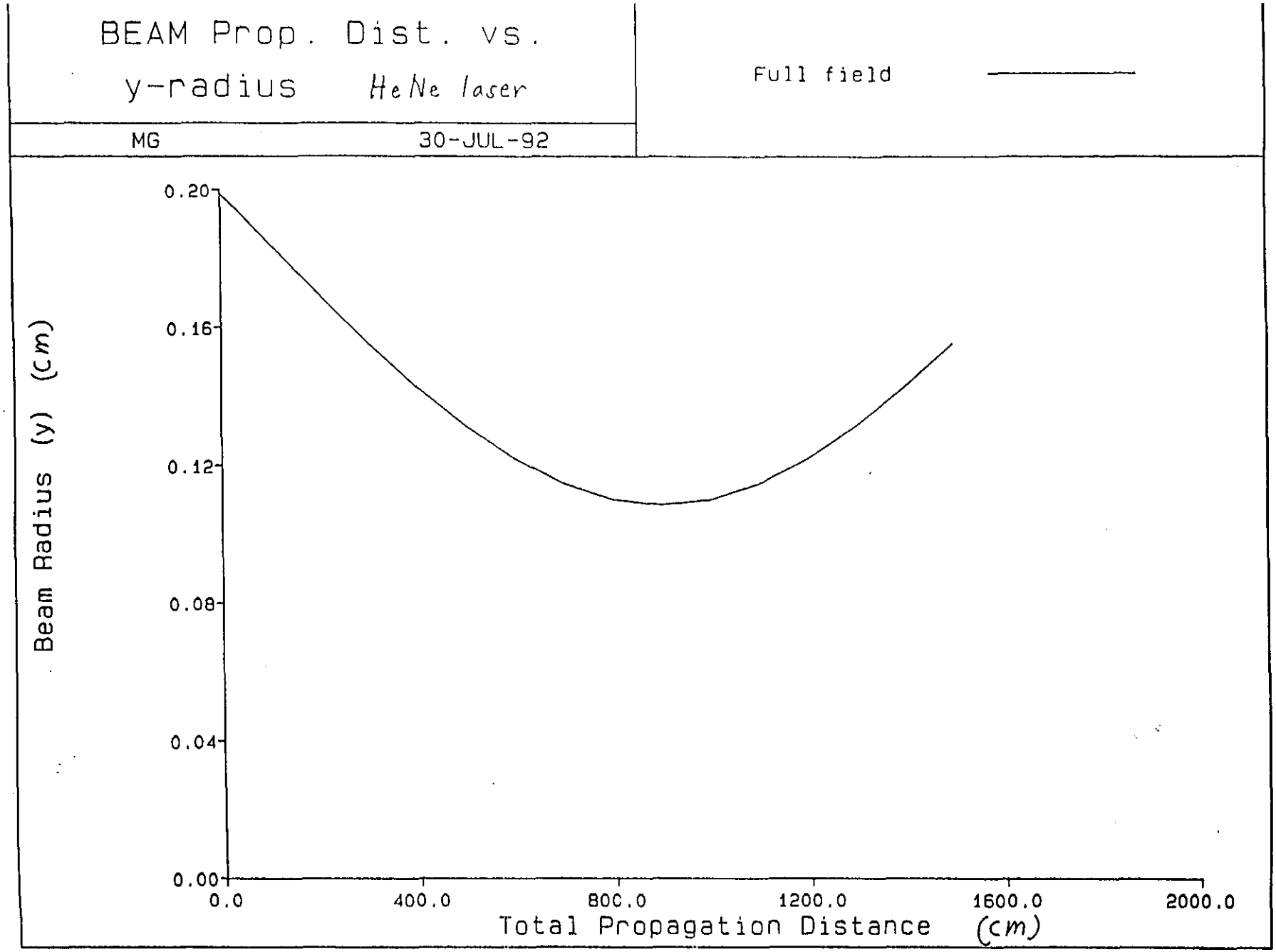

FIGURE 1. BEAM SIZE CONTROL OVER A 15 METERS

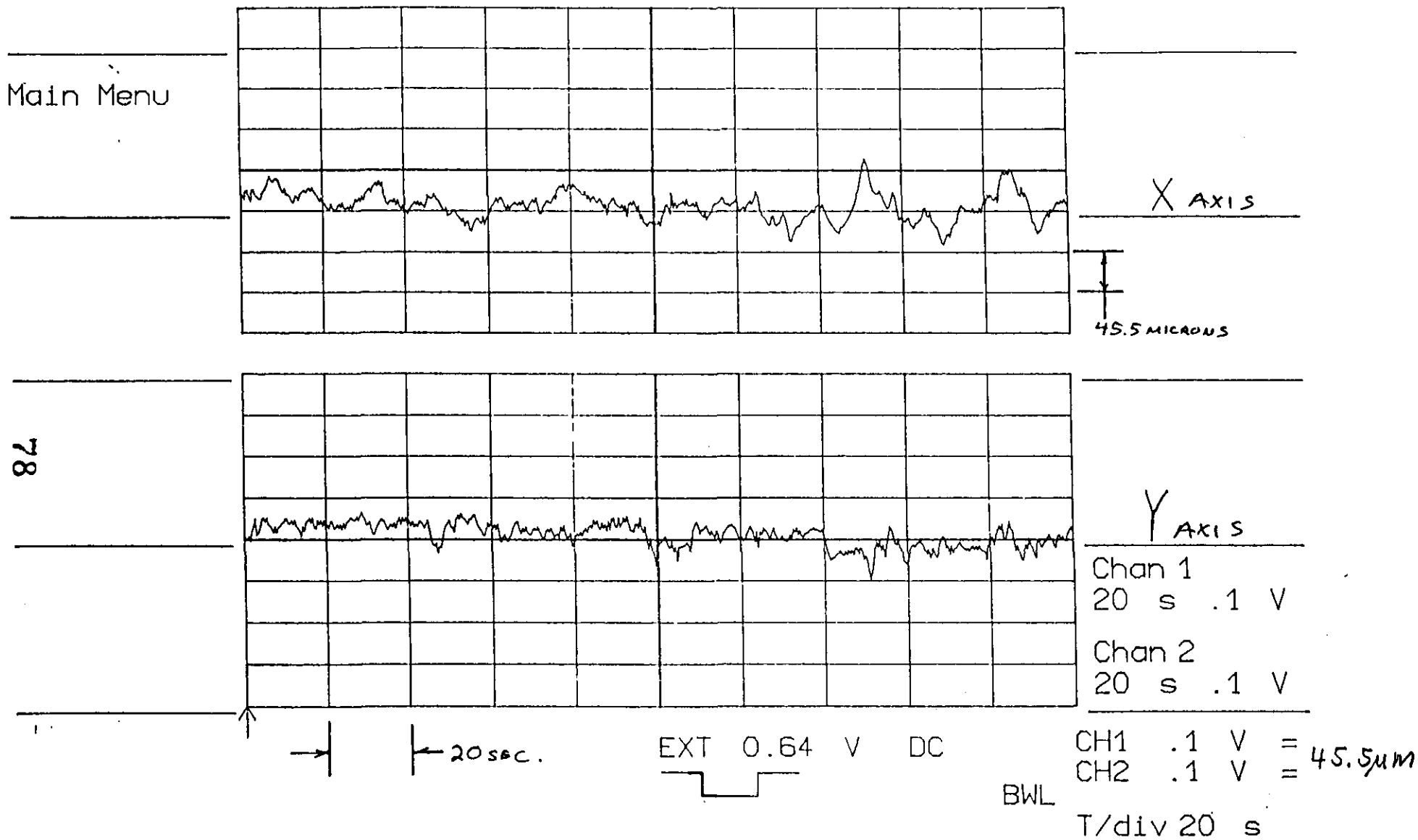

FIGURE 3. QUADCELL NOISE @ 15M

All doors closed A/C off 72°F

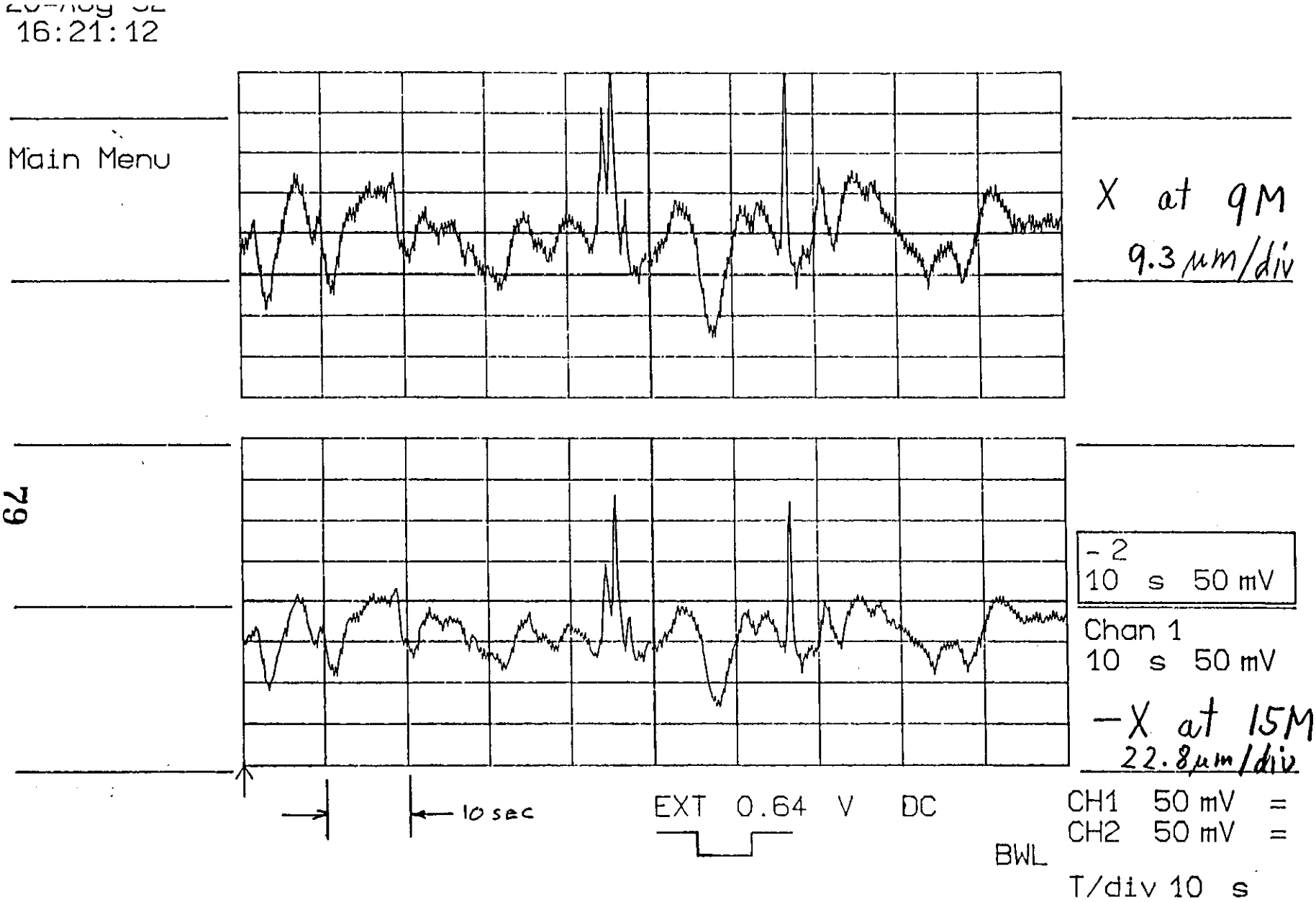

All doors closed

A/c off

Noise

FIGURE 4. CORRELATION BETWEEN NOISE AT 9 AND 15M

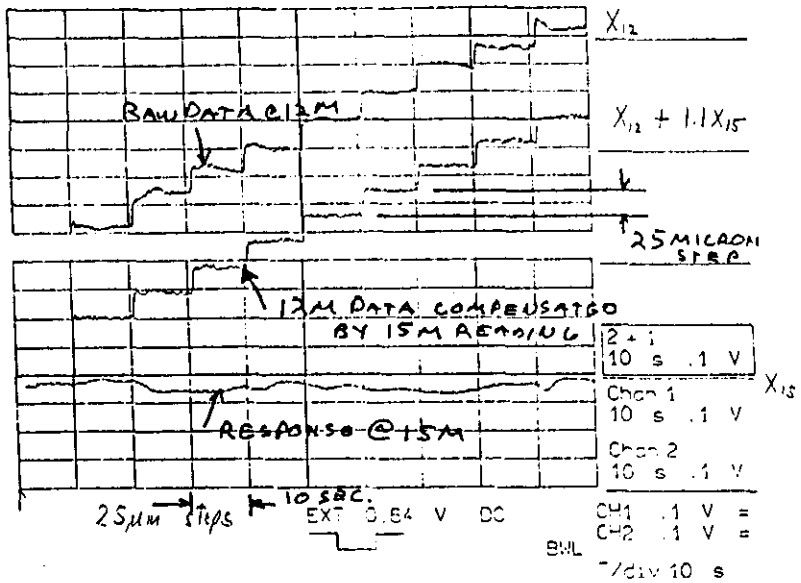

12 M

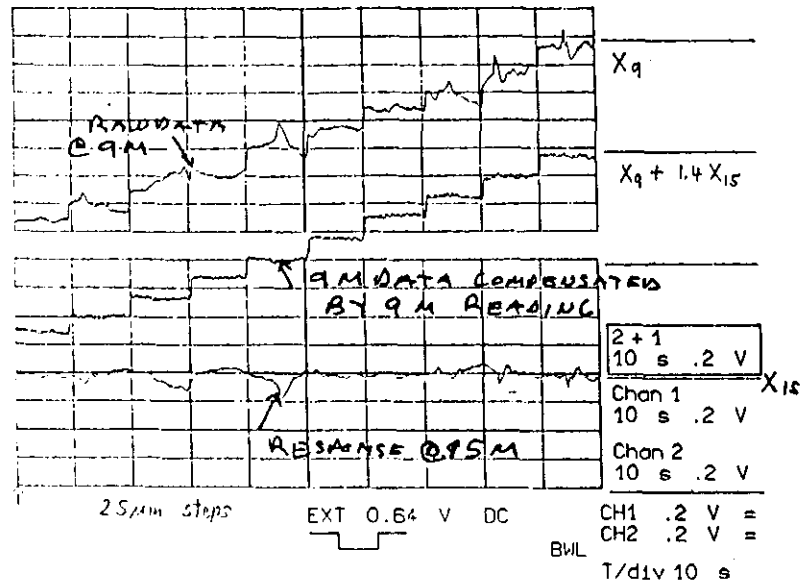

9 M

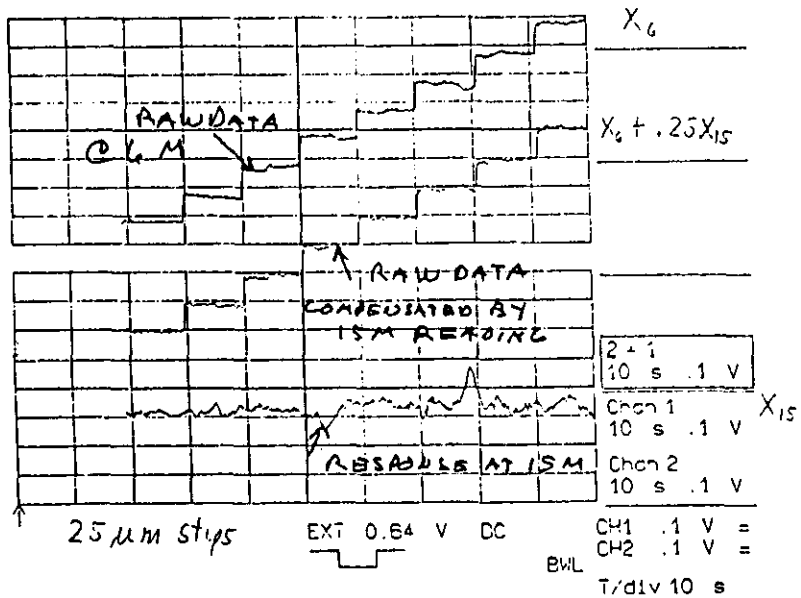

6 M

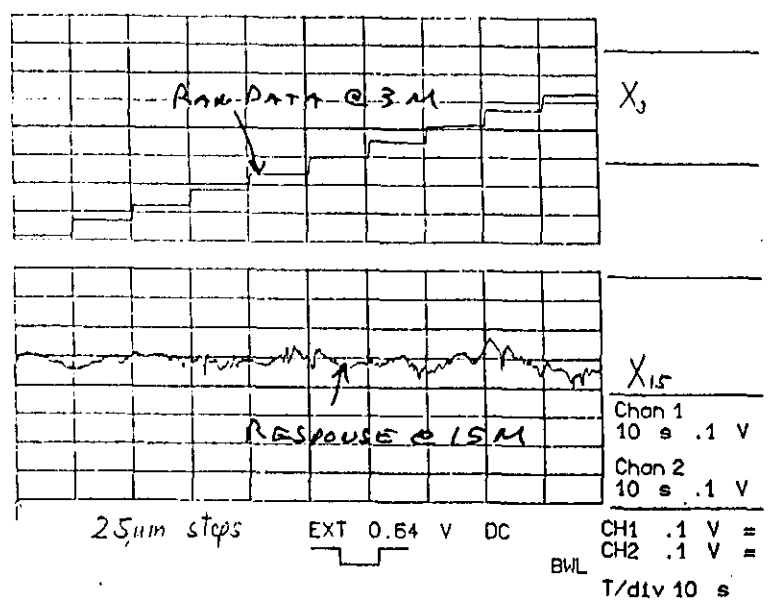

3 M

FIGURE 5. QUAD CELL RESPONSES AT DIFFERENT DISTANCES

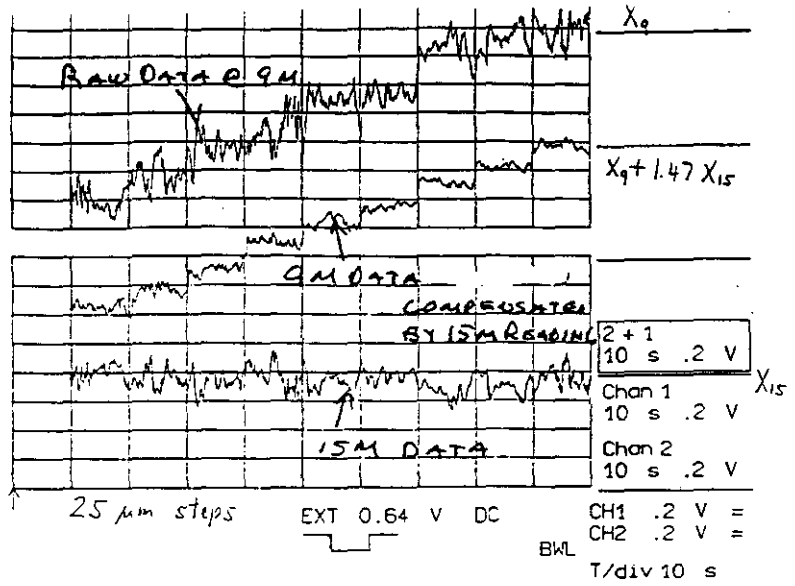

NO ELECTRICAL FILTERING

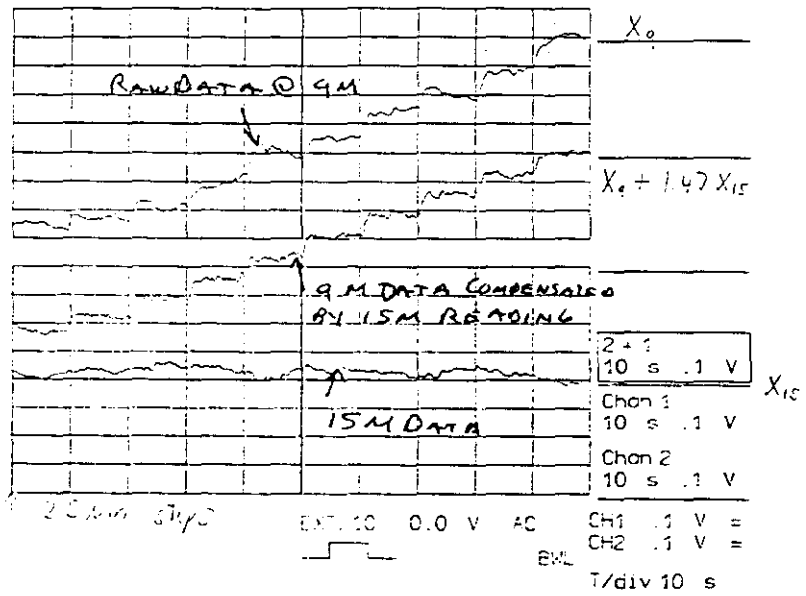

OUTPUT FILTERED WITH R-C FILTER τ 1.1 SEC

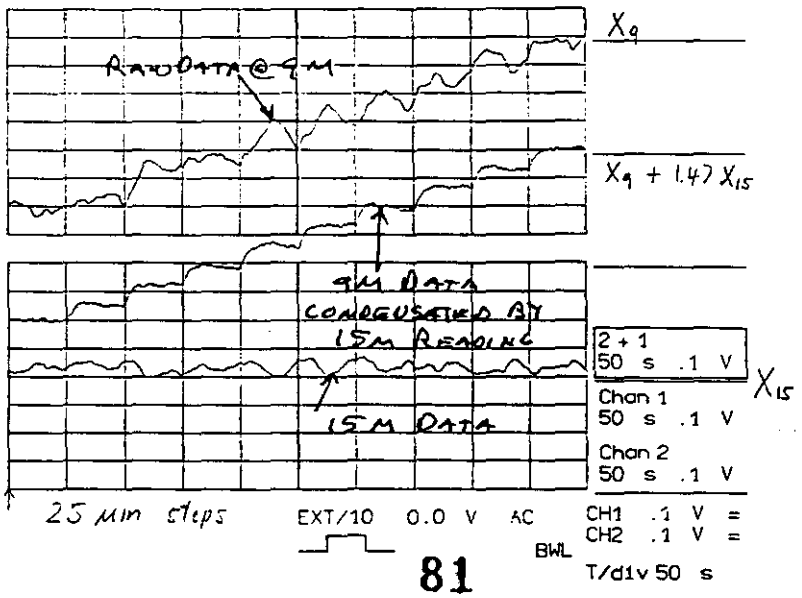

OUTPUT FILTERED WITH R-C FILTER τ 11.0 SEC

FIGURE 6. DETECTOR RESPONSE AT 9M WITH FULLY TURBULENT AIR CONDITIONS

Laser alignment evaluation conclusions

- Multipoint precision alignment monitoring can be achieved using off-the-shelf laser equipment
  - better then 25 micron accuracy demonstrated up to 12 meters

- Control and/or compensation for air turbulence and laser pointing drift is required
  - laser pointing correction demonstrated
  - low pass filtering is probably required
  - beam tubes may be required

- Need overall alignment strategy which defines the specific application for laser technology

A. Vorobyov

X-ray Alignment for CSCs

ON A POSSIBILITY TO USE THE 36 KeV X-RAY BEAM FOR CHECKS OF THE GLOBAL ALIGNMENT OF THE END-CUP CSCs

A.Vorobyov
Petersburg Institute of Nuclear Physics

The 36 KeV X-ray beam offers a remarkable possibility to perform complete tests and calibration of the CSC superlayers to a pricision of 10 micron. This idea was discussed in the GEM note TN-92-136. Since then a test was performed with the BNL light source (G.Smith) using a small CSC filled with 90% Xe + 10% CO2 at 1 to 4 atm pressure. The position resolution was measured as a function of the X-ray energy. Fig 1 shows the the results. One can see that the space resolution that could be achieved with a narrow 36 KeV X-ray beam is about 100 microns (FWHM). That means that the center-of-gravity of this distribution could be easily determined with 10 microns precision.Still more studies are required to understand the background effects under real conditions.

Meanwhile a special X-ray tube with a Pr-anticathode and with a crystal monochromator is under construction at PNPI (Fig 2).The first tube is expected for tests in Dec 92. The primary goal is to construct a pilot X-ray station using a high precision moveable (0.5m * 0.5m) table for first tests of the CSC superlayers at PNPI (Fig 3).
The next step will be construction of a full size (up to four meters) X-ray station at SSCL using a high precision moveable table from LLNL.

Now the question is if the X-ray beam could be used also for global alignment of the CSC modules. Technically it looks doable at least for the end cups. One option is to perform the X-ray tests of the whole end cup muon system when it is moved away from the central detector (Fig 4).Placing the X-ray tube in front of the end cup one can calibrate the whole system to a high precision: 10 microns in the first superlayer, 20 microns in the last superlayer. Still we have here some problems to solve:

- The power of the X-tube should be considerably higher than in the X-ray table tests especially because of essential absorbtion of the X-rays in the superlayer. This can be achieved in the new X-ray tube now under designing.Also it is planned to reduce strongly the absorbtion in the CSCs by decreasing the width of the G10 plates and by removing the most absorbtive element from these plates.
- The expected divergency of the X-ray beam is 50 microrad. That means that the FWHM of the beam will be 100 microns in the first superlayer, 200 microns in the second, 400 microns in the third superlayer. The goal is to determine the center-of-gravity of the beam with 10 to 20 microns precision.That requires the knowledge of the beam shape to a good enough accuracy. The beam shape can be measured precisely but the question is how stable will be this shape during the calibrations. This should be investigated.
- When the end cup is in its permanent position, still it is possible to send the X-ray beam from behind (Fig 5).Though might be some problems with some dead zones due to mechanical structures of the end cup support. An interesting question is if the X-ray tube can operate in the magnetic field.This is a question of shielding of the tube.

A realistic application of the X-ray beam is to check the "six-point interpolation technique" which is now considered for the alignment procedure in the muon system. This possibility was analised in details in a recent GEM note by A.Ostapchuk and V.Schegelsky.

In conclusion, the 36 KeV X-ray beam might provide a very useful check of the alignment of the CSCs in the end cups thus increasing the relyability of the high resolution measurements of the muon trajectories in the muon system.

BNL light source

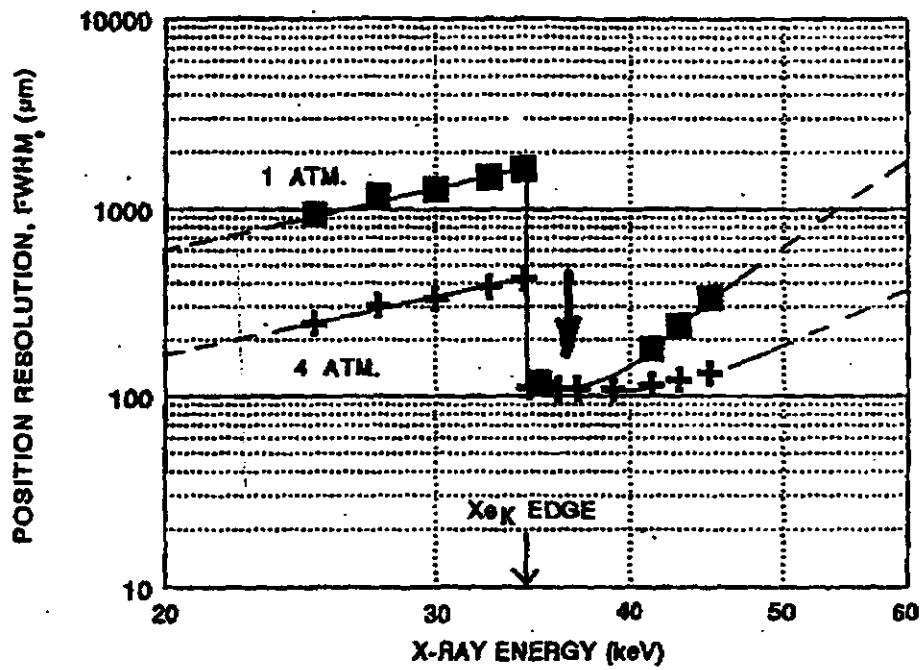

90% Xe + 10% C

BNL

G. SMITH

FIG. 1

FROM:physics NOV 26, 1992 8:58PM P.05
TO: 5104238686

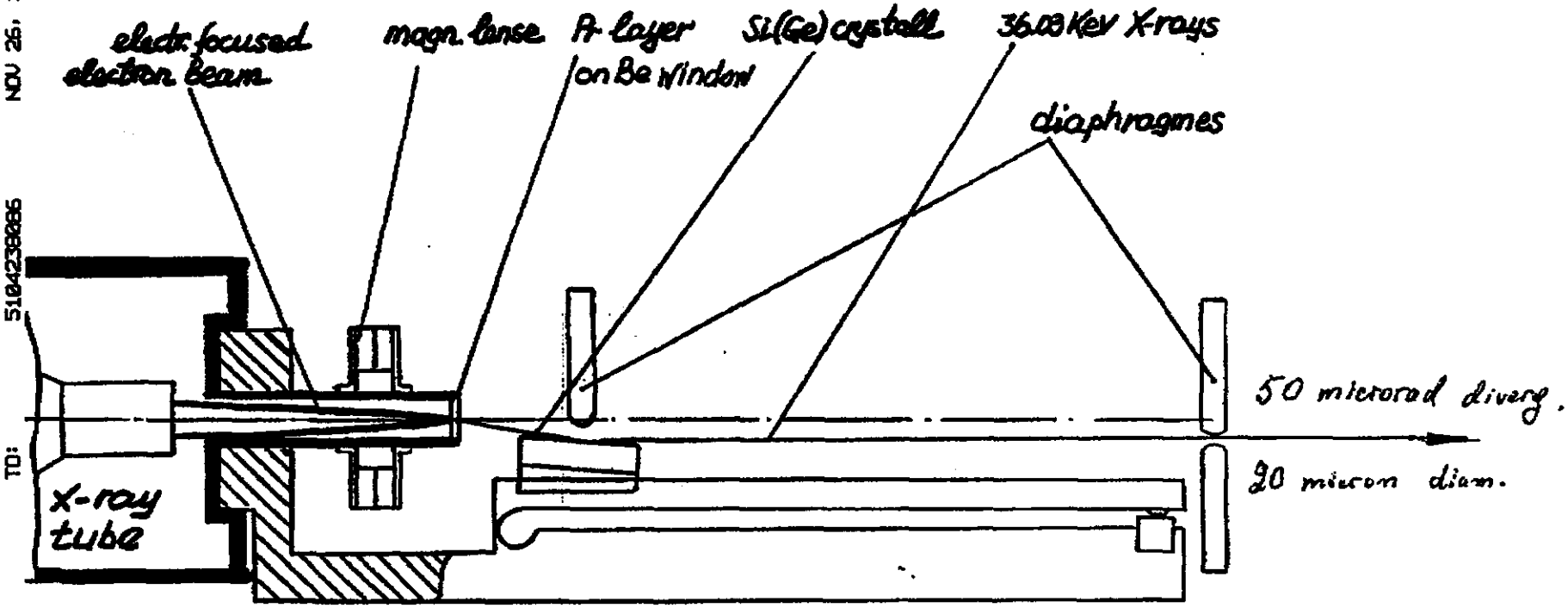

FIG. 2

Small X-ray test stand

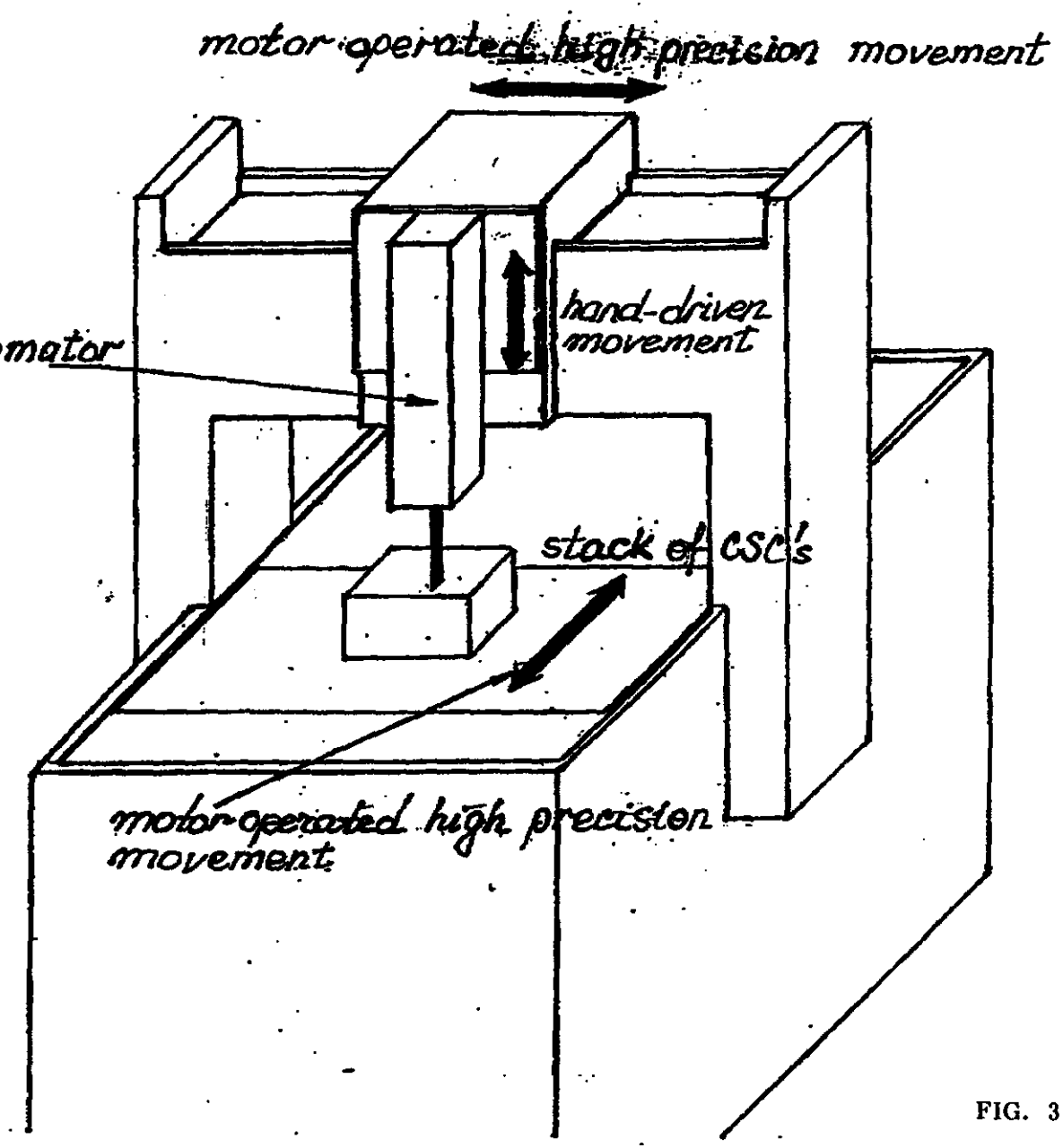

FIG. 3

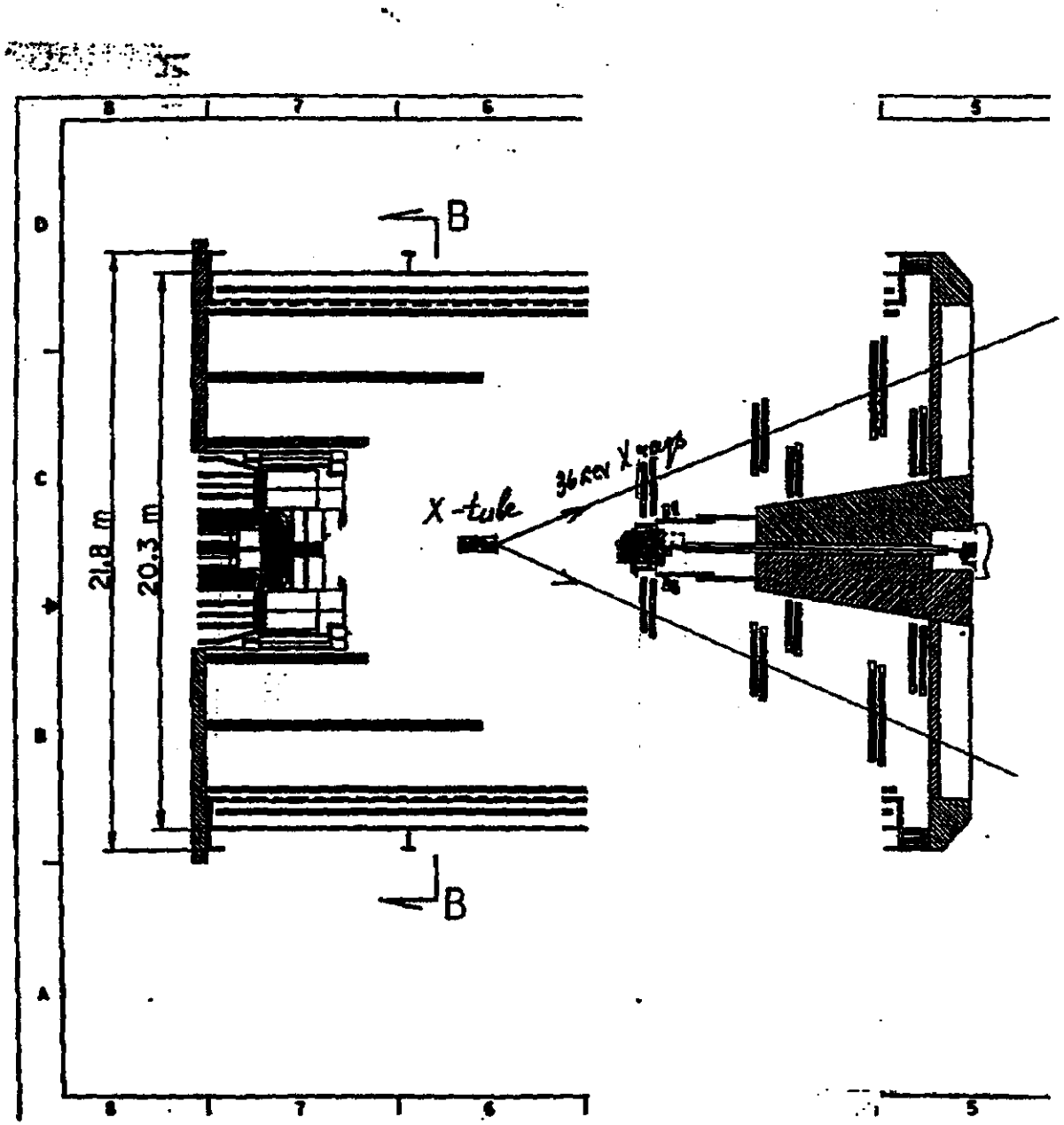

FIG. 4

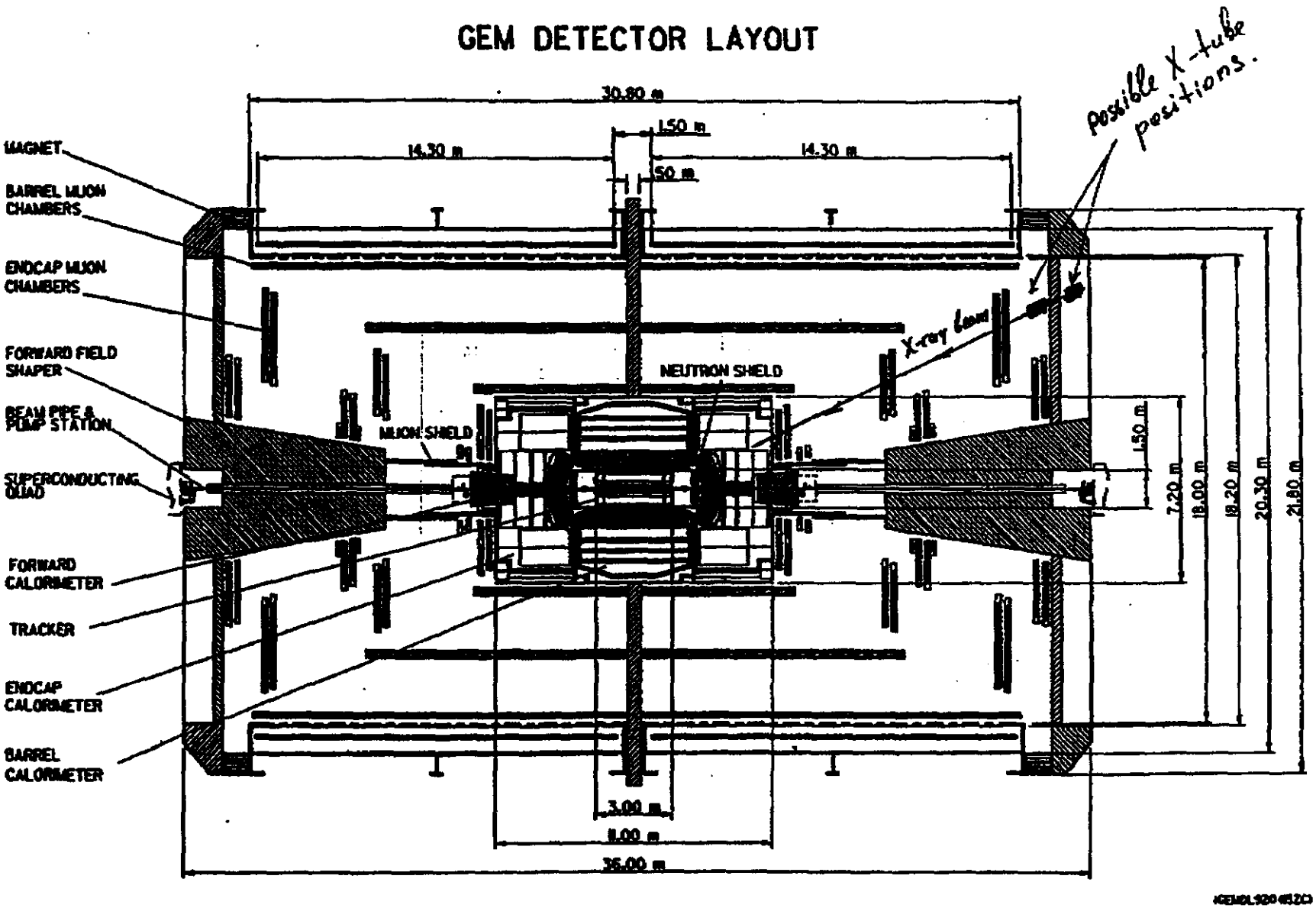
GEM DETECTOR LAYOUT
MAGNET
BARREL MUON CHAMBERS
ENDCAP MUON CHAMBERS
FORWARD FIELD SHAPER
BEAM PIPE & PUMP STATION
SUPERCONDUCTING QUAD
FORWARD CALORIMETER
TRACKER
ENDCAP CALORIMETER
BARREL CALORIMETER
MUON SHIELD
NEUTRON SHIELD
30.80 m
1.50 m
14.30 m
14.30 m
.50 m
1.50 m
7.20 m
18.00 m
18.20 m
20.30 m
21.80 m
3.00 m
8.00 m
36.00 m
Possible X-tube positions.
X-ray beam

FIG. 5

TEST OF GEM ALIGNMENT SCHEME WITH CATHODE STRIP CHAMBERS AND X-RAY SOURCE

A.Ostapchuk, V.Schegelsky

November 17, 1992

93

1 Possible methods of GEM alignment scheme test

A MODEL OF GEM MUON DETECTOR TOWERS COULD BE CONSTRUCTED WITH RELEVANT OPTICAL SYSTEM. ANOTHER WAY TO TEST THE ALIGNMENT SCHEME PRINCIPLES IS TO USE MUON CHAMBER PROTOTYPE AS DETECTING ELEMENT OF ALIGNMENT SYSTEM.

CHARGE PARTICLES COULD BE USED FOR SUCH TEST. BUT SIMPLE EVALUATION SHOWS THAT THE COSMIC RAYS FLUX IS TOO SMALL FOR THIS PURPOSE.

FIX-TARGET ACCELERATOR BEAMS DON'T SIMULATE DIVERGENCE OF PARTICLES FROM THE COLLIDER INTERACTION POINT , AND WE NEED TO MOVE CHAMBER SET RELATIVE TO THE BEAM DIRECTION FOR SIMULATION OF THIS EFFECT. REQUIRED TOLERANCES ARE NOT VERY SEVERE, BUT TEDIOUS.

WE PROPOSE TO RESOLVE THESE DIFFICULTIES BY USING X-RAYS FOR SIMULATION OF HIGH-MOMENTUM MUON TRAJECTORIES (SEE LAPINA L. ET AL.,"X-RAY TEST STATION FOR CATHODE STRIP MUON CHAMBERS", GEM INTERNAL NOTE TN-92-136).

2 X-ray test bench

2.1 Geometrical layout and requirements for X-ray source

THE POSSIBLE GEOMETRICAL LAYOUT OF THE X-RAY TEST BENCH IS SHOWN IN FIGURE. THREE CATHODE STRIP CHAMBERS OF DIMENSIONS 50CM X 50CM ARE POSED IN PARALLEL PLANES WITH SEPARATION OF 30CM. ANGLE ϕ IS EQUAL TO 22.5^0 TO CORRESPOND TO GEM SECTOR ANGLE $(360^0/16 = 22.5^0)$. X-RAY SOURCE IS SITUATED ON THE DISTANCE

$$h = 120cm$$

FROM THE FAREST CHAMBER.

WHAT ARE THE REQUIREMENTS FOR X-RAY SOURCE?

IF WE REQUIRE ERROR DUE TO THE BEAM DIVERGENCE TO BE NEGLECTED IN COMPARISON WITH THE CHAMBER INTERNAL ERROR AND ASSUME THAT:

$$\sigma_{int} \simeq 100\mu$$

WE OBTAINE THE REQUIREMENT FOR α_{div}:

$$\alpha_{\mathbf{div}} \leq \mathbf{50mkrad}. \tag{1}$$

MONTE CARLO CALCULATIONS SHOW THAT FOR THIS LAYOUT THE REQUIREMENT FOR X-RAY DIRECTION ACCURACY σ_θ:

$$\sigma_\theta \leq \mathbf{5mrad}. \tag{2}$$

THE REQUIREMENT FOR THE ACCURACY σ_ϕ:

$$\sigma_\phi \leq \mathbf{6mrad}. \tag{3}$$

2.2 Preliminary plan of test

PROCEDURE OF TEST SHOULD BE FOLLOWING. X-RAYS ARE DIRECTED TO THE APPOINTED PLACES NEAR THE PERIMETER OF THE OUTER CHAMBER AND FALSE SAGITTAS, MEASURED BY CATHODE STRIP CHAMBERS, ARE CALCULATED. THIS IS THE SIMULATION OF STRAIGHTNESS MONITORS READINGS. THEN X-RAYS ARE DIRECTED INSIDE THE TOWER SOLID ANGLE, AND MEASURED FOR THESE DIRECTIONS FALSE SAGITTAS ARE COMPARED WITH THE VALUES OF THE QUADRATIC INTERPOLATION FUNCTION, CALCULATED FROM "MONITORS READINGS" (SEE MITSELMAKHER G. AND OSTAPCHUK A.,"NEW APPROACH TO MUON SYSTEM ALIGNMENT", GEM INTERNAL NOTE TN-92-202).

WE PROPOSE TO STUDY THE FOLLOWING EFFECTS:

- **chamber shifts and rotations relative to different axes(chambers are moved);**
- **chamber temperature expansion/contraction (chambers are heated);**
- **chamber torsion (chambers are bent);**
- **chamber gravitational sag (chambers are loaded);**
- **non-projectivity of monitor directions and particle trajectories;**
- **necessary number of straightness monitors.**

3 Conclusions

PROPOSED PROCEDURE TO TEST BASIC PRINCIPLES OF GEM ALIGNMENT SCHEME LOOKS REASONABLE: REQUIREMENTS TO X-RAY CSC TEST FACILITY DO NOT EXCEED EXPECTED PERFORMANCE PARAMETERS (**beam divergence of 50mkrad, direction angle accuracy of 5 mrad**). EVIDENTLY A FULL SCALE PROTOTYPE IS REQUIRED TO INVESTIGATE TECHNICAL ASPECTS OF ALIGNMENT SCHEME IMPLEMENTATION. HOWEVER WE EXPECT THAT ITS CRUCIAL FEATURES CAN BE DEMONSTRATED IN THE NEAREST FUTURE EVEN WITH USE OF EXISTING CSC PROTOTYPES.

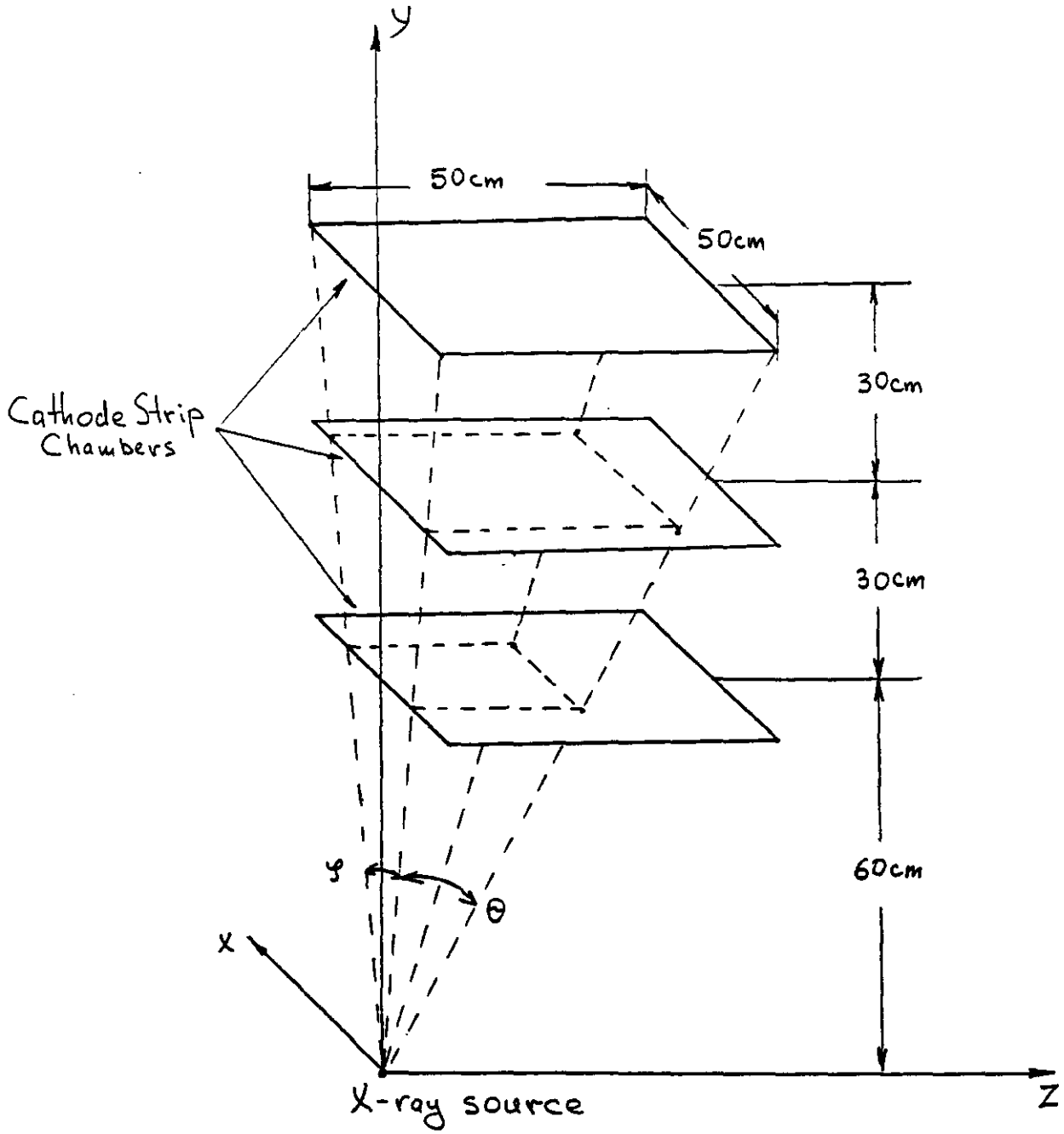

Fig.1 Geometrical Layout of X-ray CSC Test Bench

L. Collins

U-AVLIS Alignment, Control Systems and Diagnostics

Atomic Vapor Laser Isotope Separation (AVLIS) process

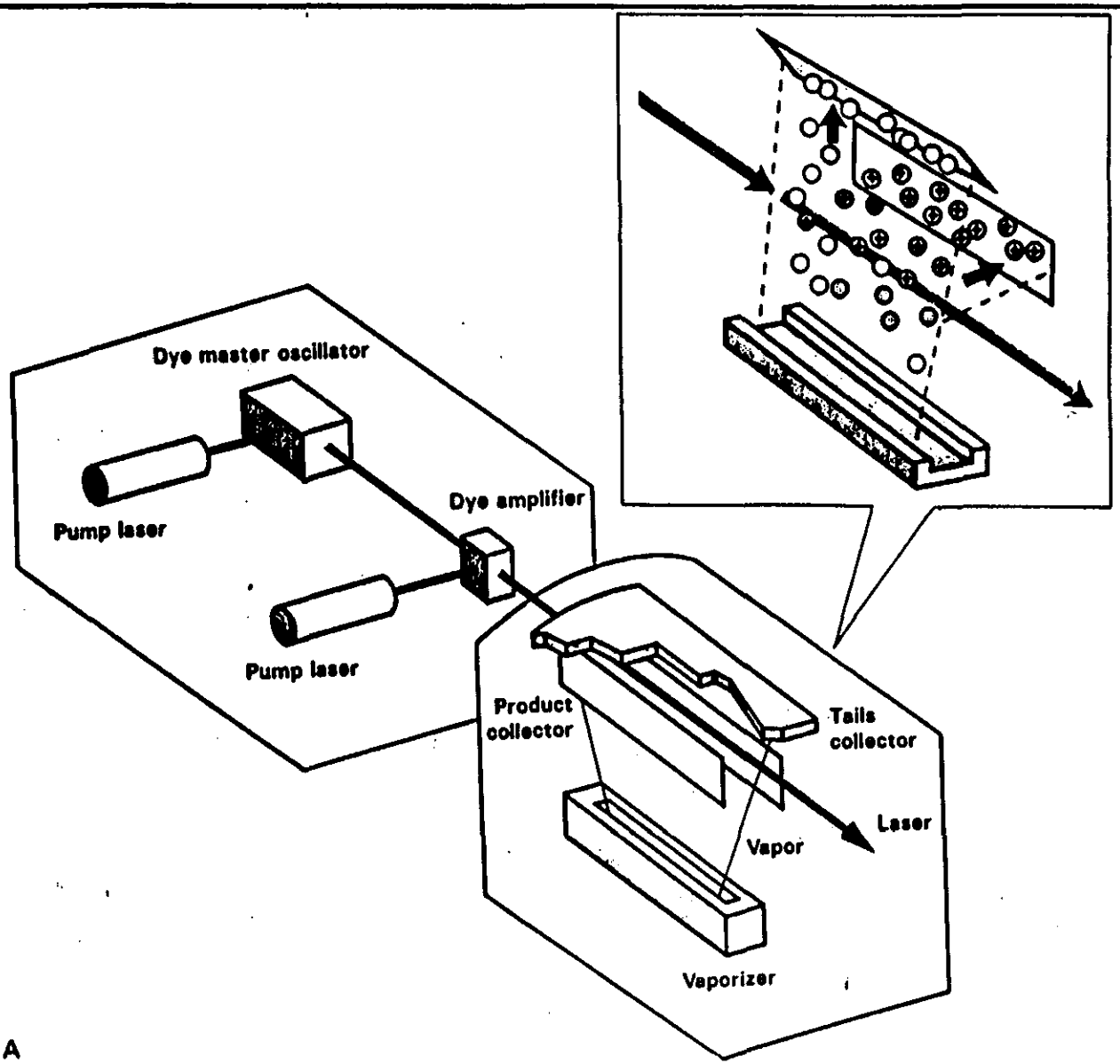

30-00-0685-2462A

9/85

U-AVLIS Demonstration Facility at LLNL

MARTIN MARIETTA

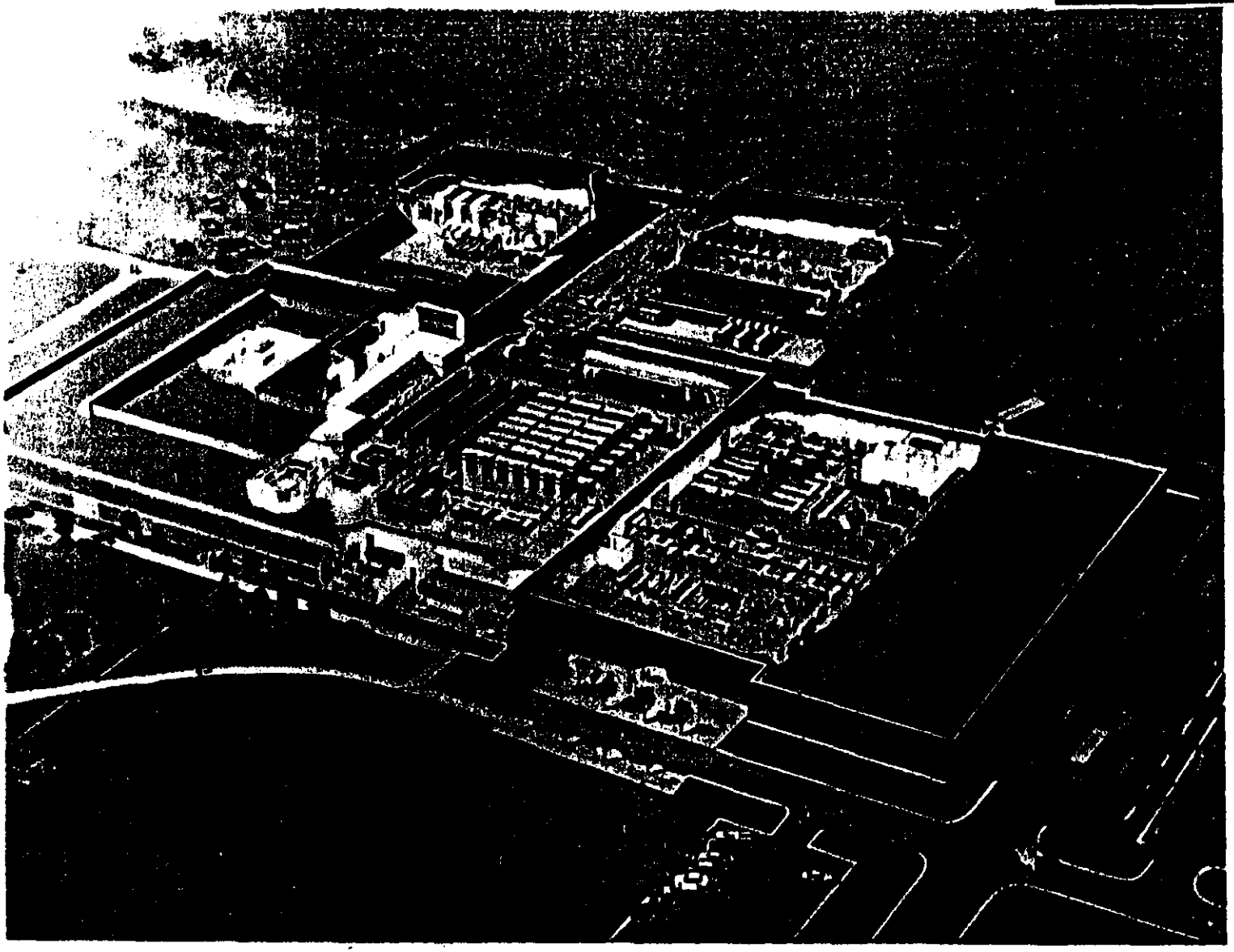

1.0.0890.2492A
8 SAJ

Major components of the beam alignment system

MARTIN MARIETTA

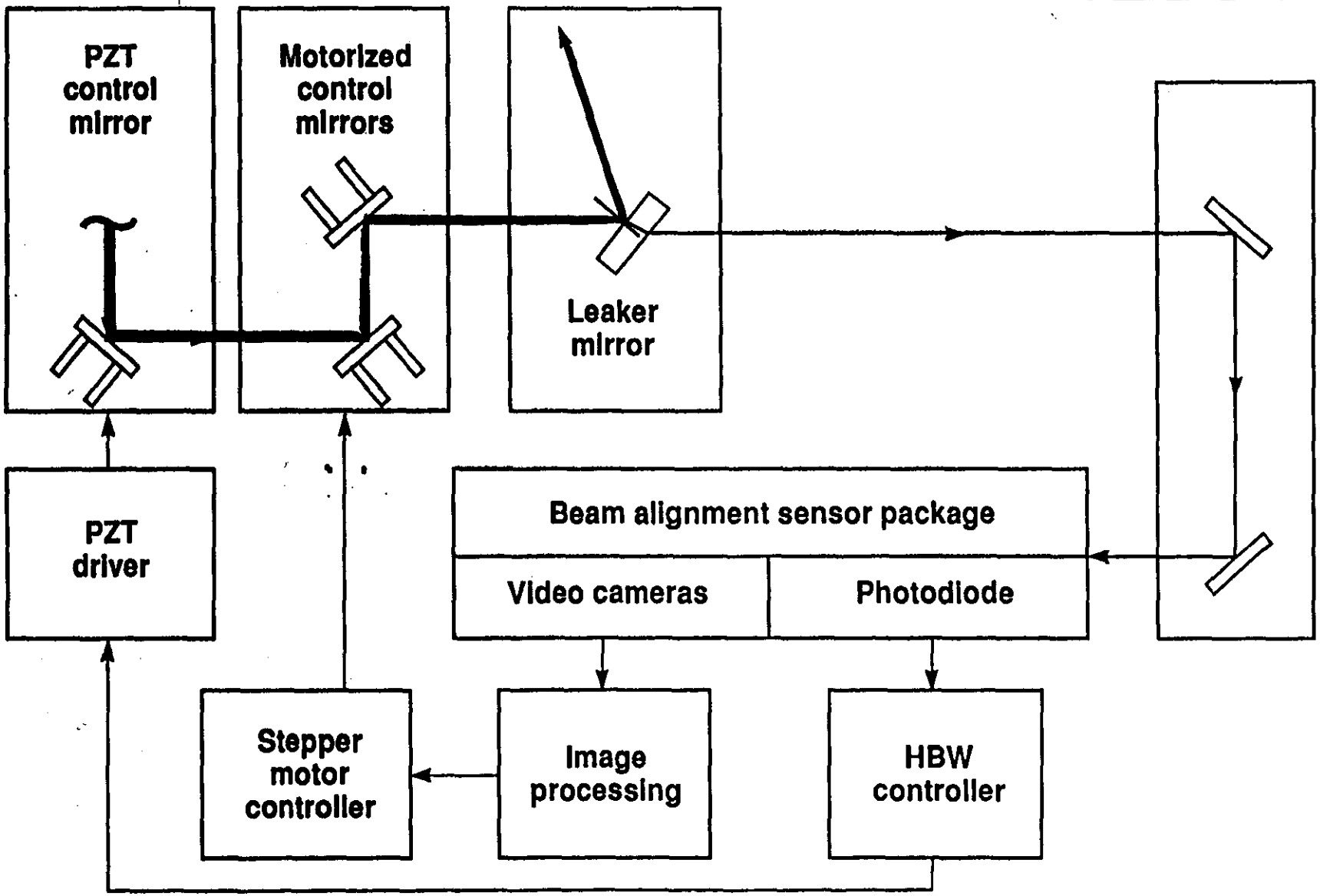

1.1.3.0692.1793
25WJR/mh

Pointing (far field imaging) sensor

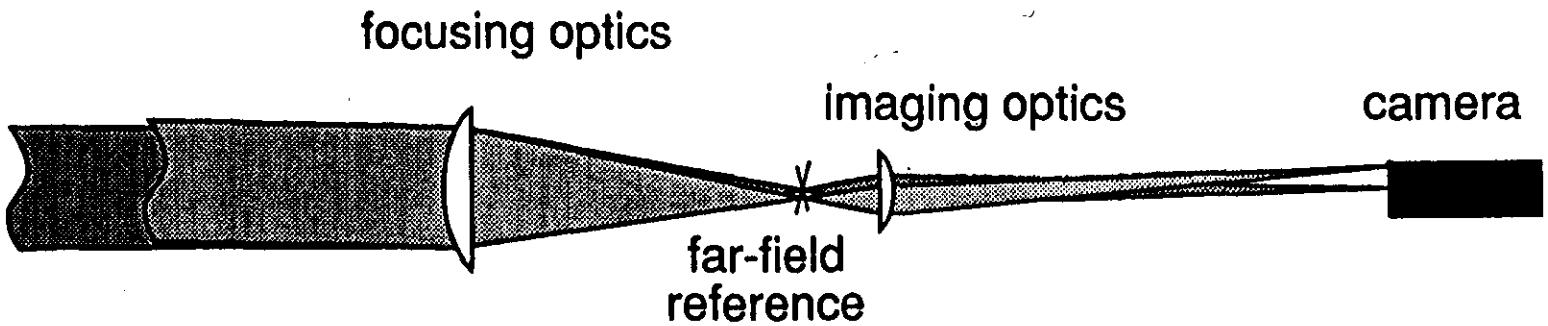

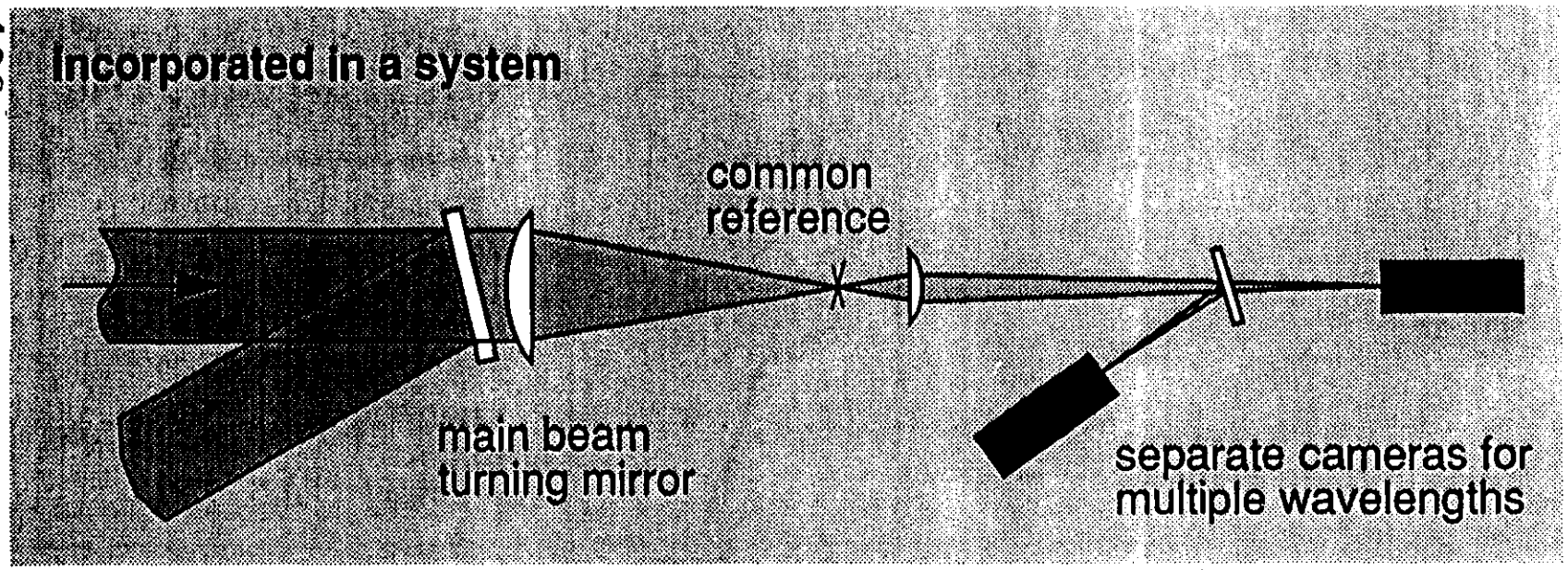

ESB 030891-3

Centering (near field imaging) sensor

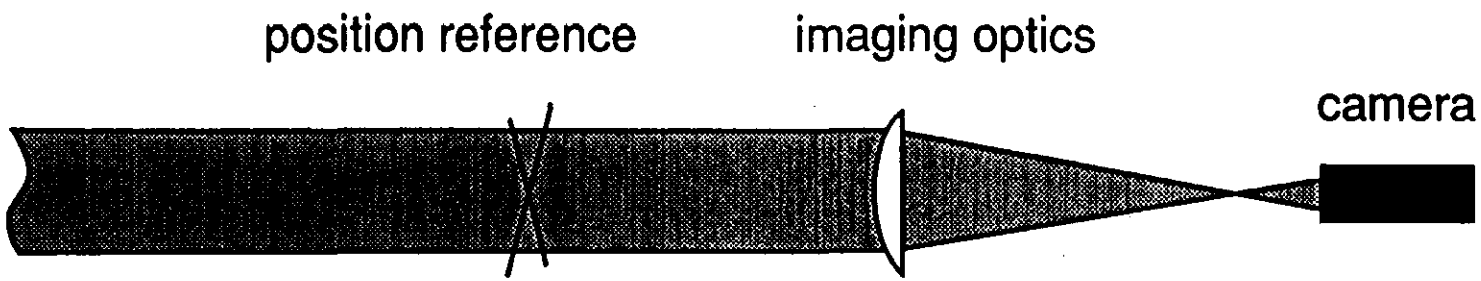

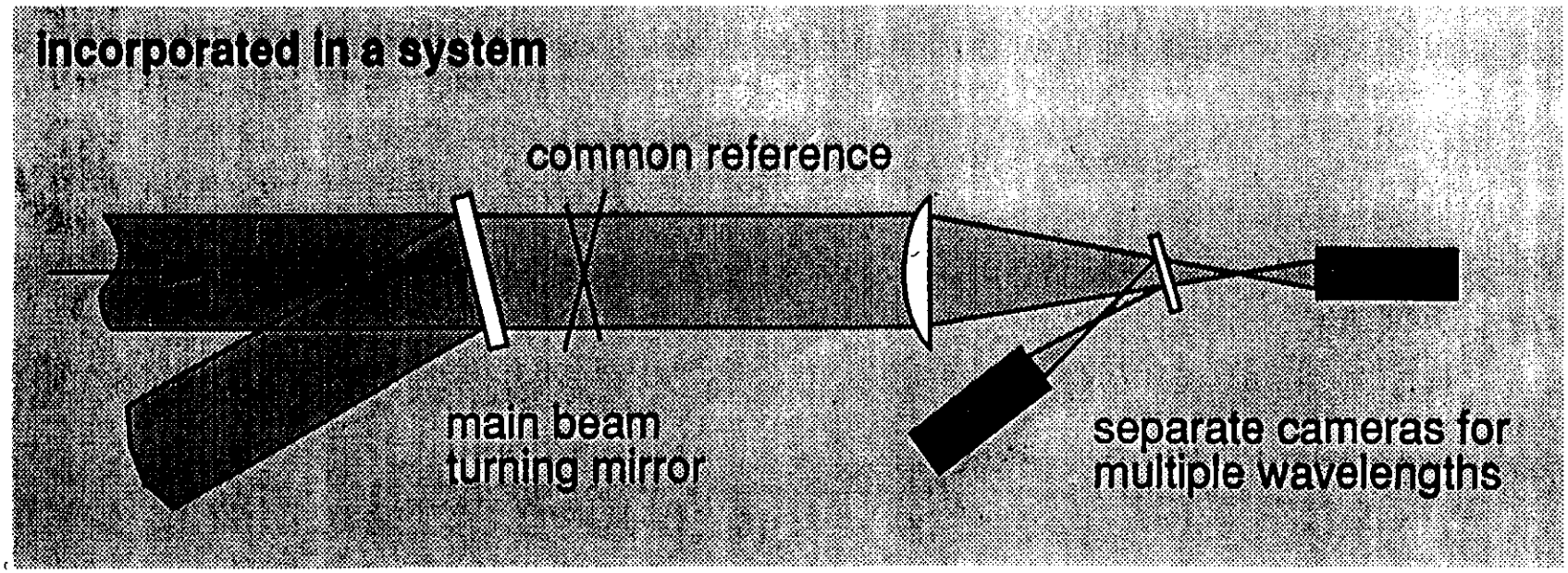

ESB 030891-2

Beam alignment sensor package optical schematic

MARTIN MARIETTA

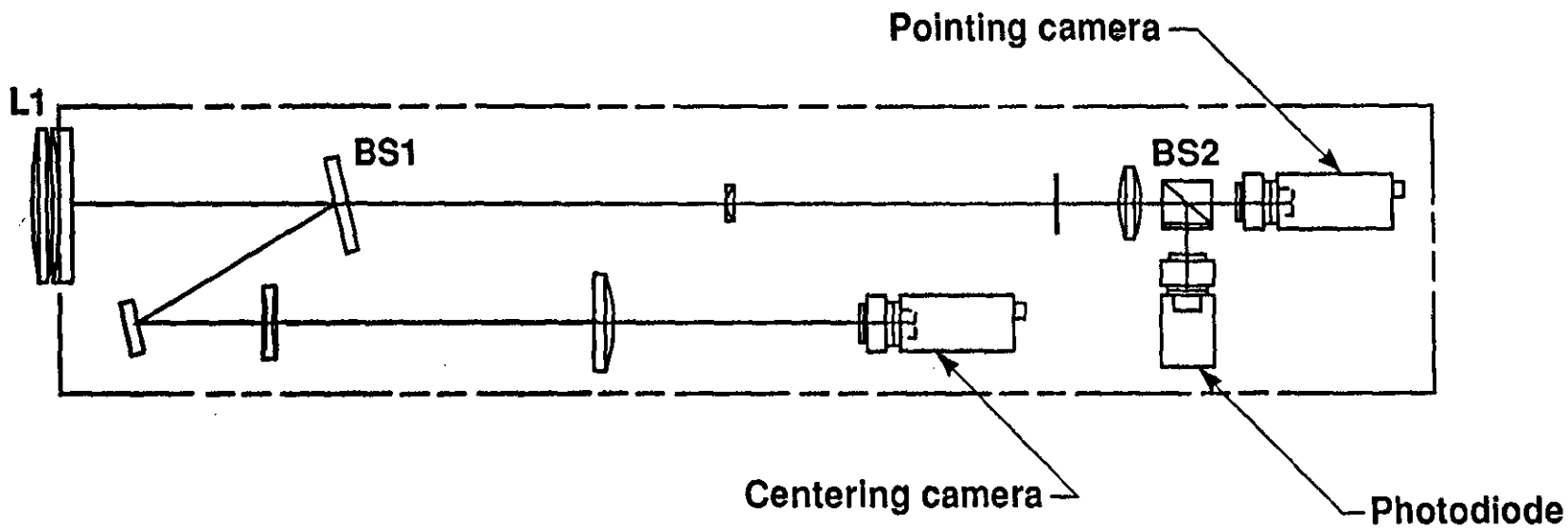

1.1.3.0692.1797

Beam alignment sensor package

MARTIN MARIETTA

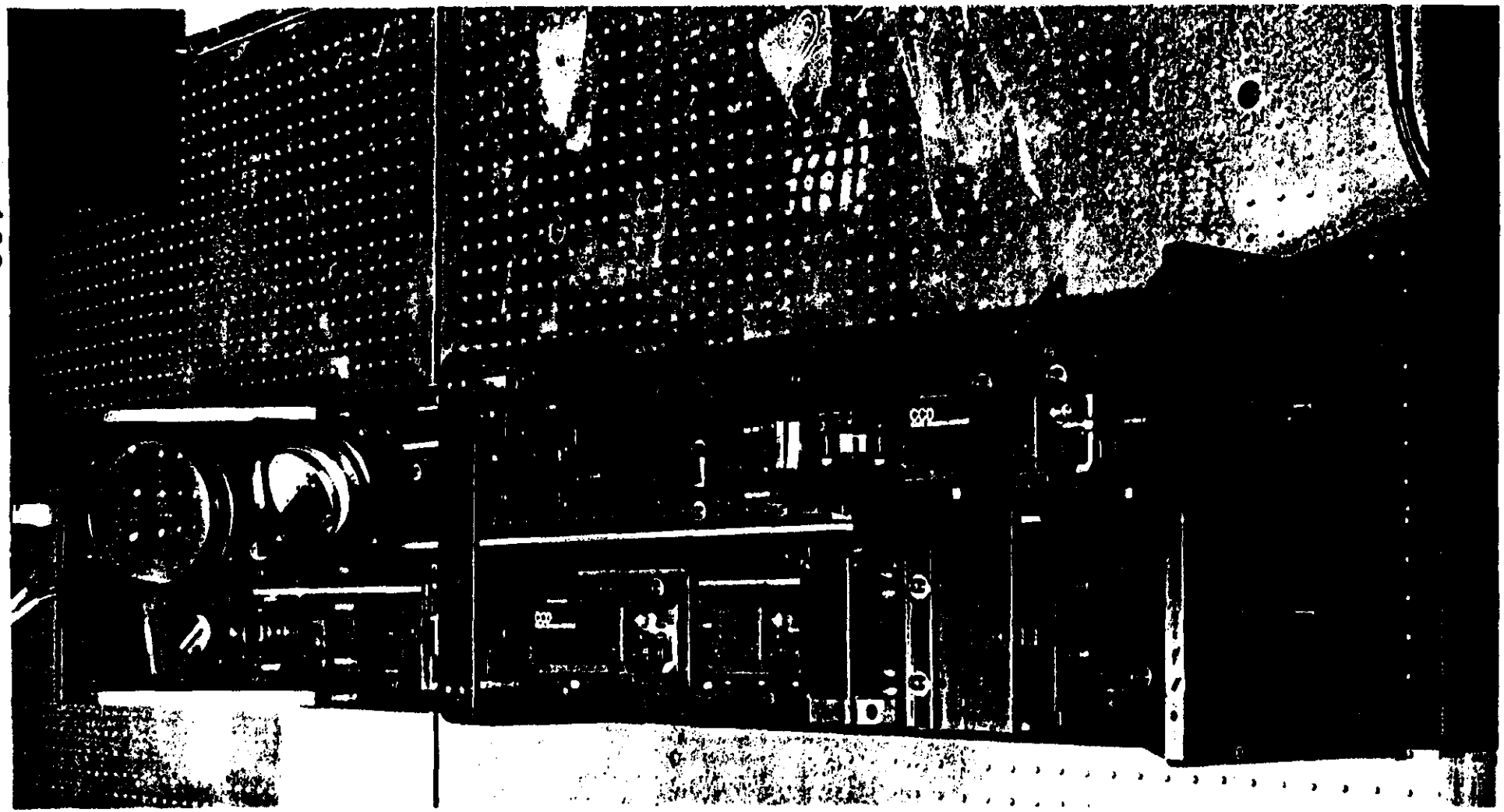

c.1.3.1191.3950
12ERB

Low bandwidth alignment data is standard video

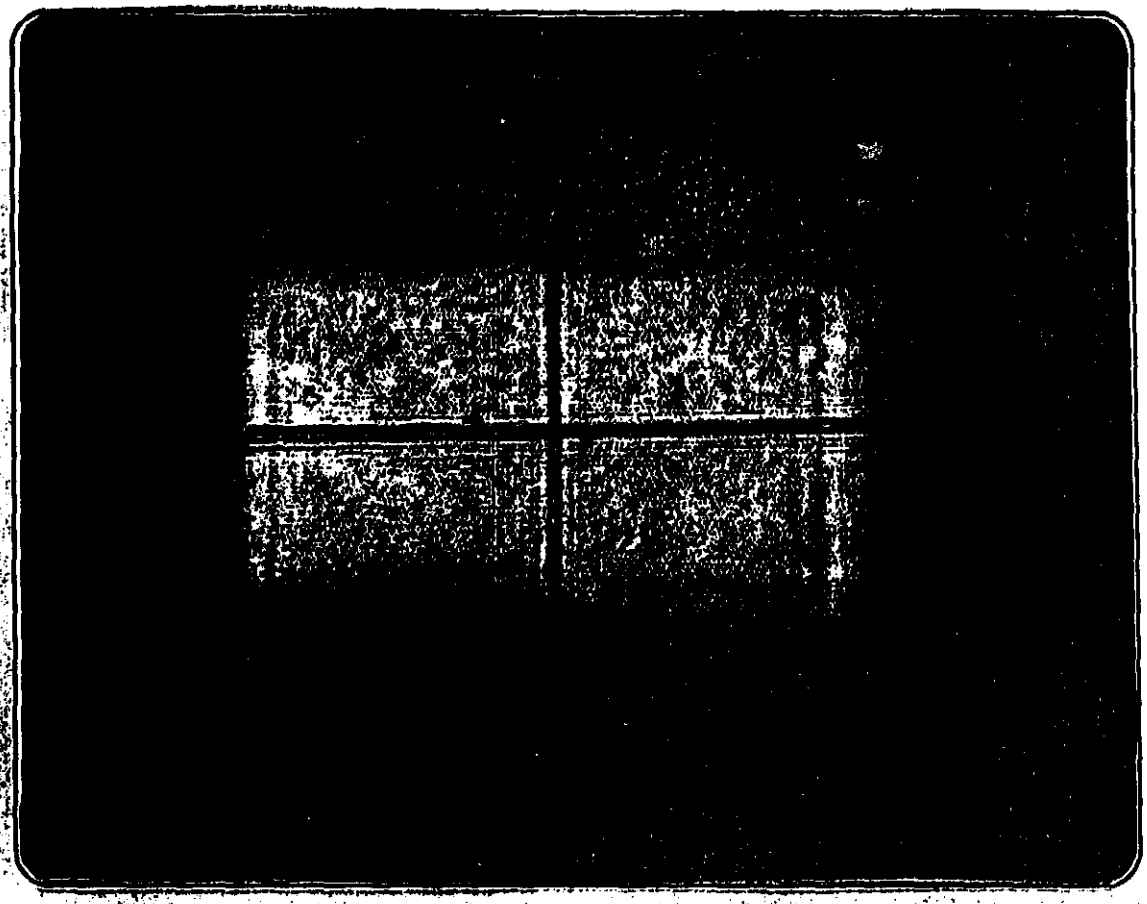

Dye beam centering image

Photo-Lateral Diode & Diode Signal Conditioning

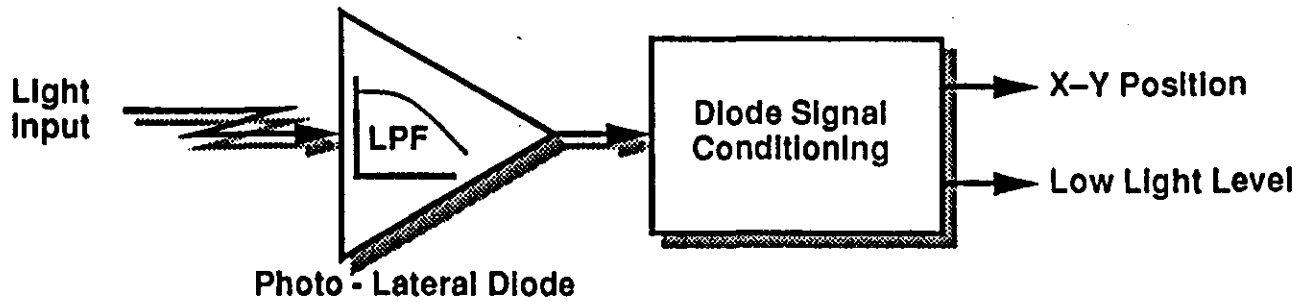

- Roll-off filters will remain part of the diode electronics package
- Filtering of the pulsed light signal from the Dye Lasers is required
- Control the skew of the data from the diode signal lines
- Incorporate the response of the diode and signal conditioning electronics into the HBW control law
- Maximize the dynamic range of the diode output for low light level operation
- Provide a low light level indicator for the controller and for the ODC
- Provide buffered analog outputs of diode data for maintenance, vibration monitoring and calibration aids

Module optics high bandwidth alignment loop (6" LLNL mount)

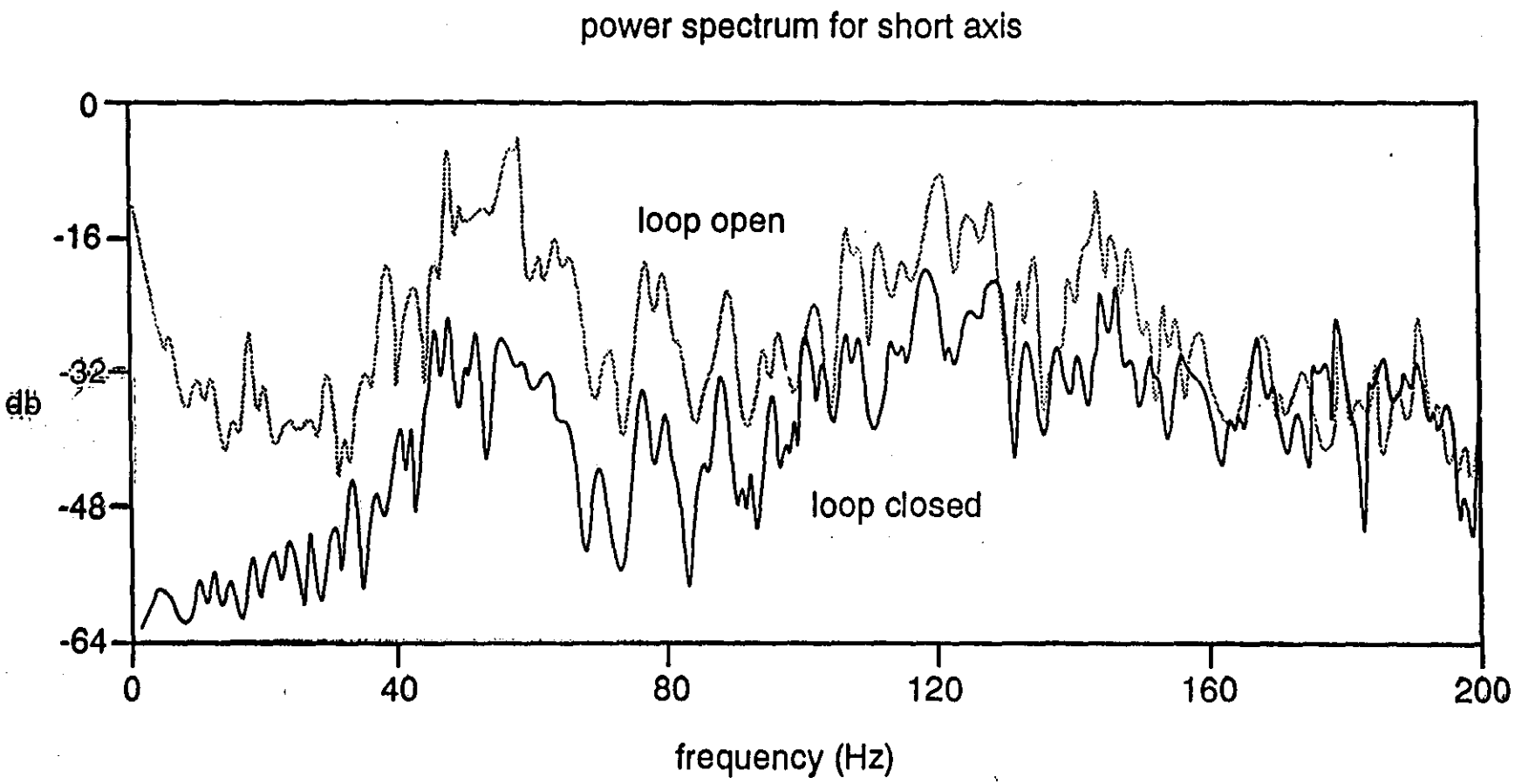

ESB09
3092-1

Beam alignment system—performance

MARTIN MARIETTA

• Pointing sensitivity calibration	0.8 μr/pixel
• Pointing control for a three-pixel deadband	2.4 μr
• Centering sensitivity calibration	0.2 mm/pixel
• Centering control for a three-pixel deadband	0.6 mm
• Control rate for a dual-video camera loop	15 Hz
• Disturbance rejection rate for diode loop (>10 dB)	200 Hz
• Number of pointing and centering loops deployed	22
• Number of operating hours to date	1,000 h

Interferometer (self referencing Mach-Zehnder)

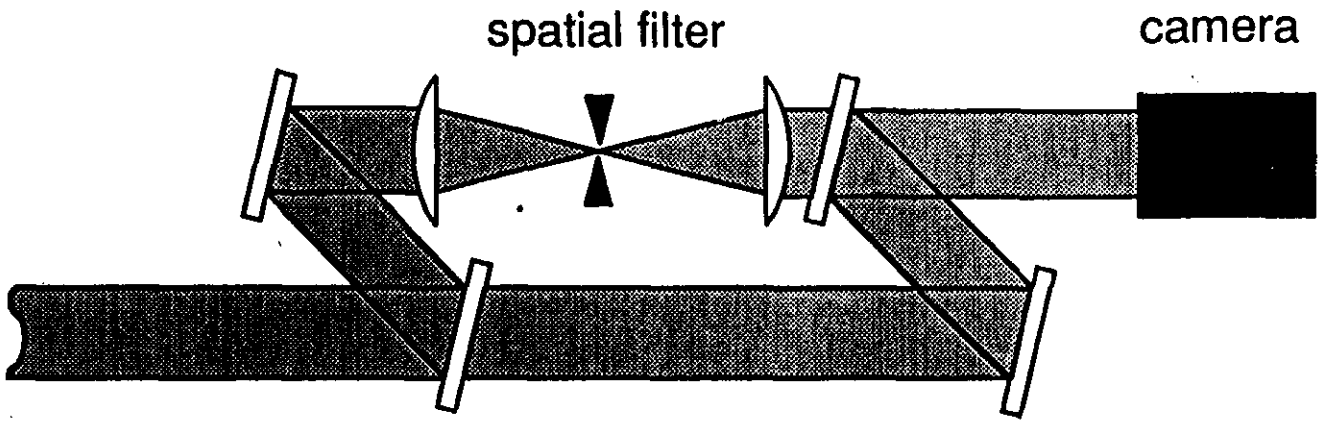

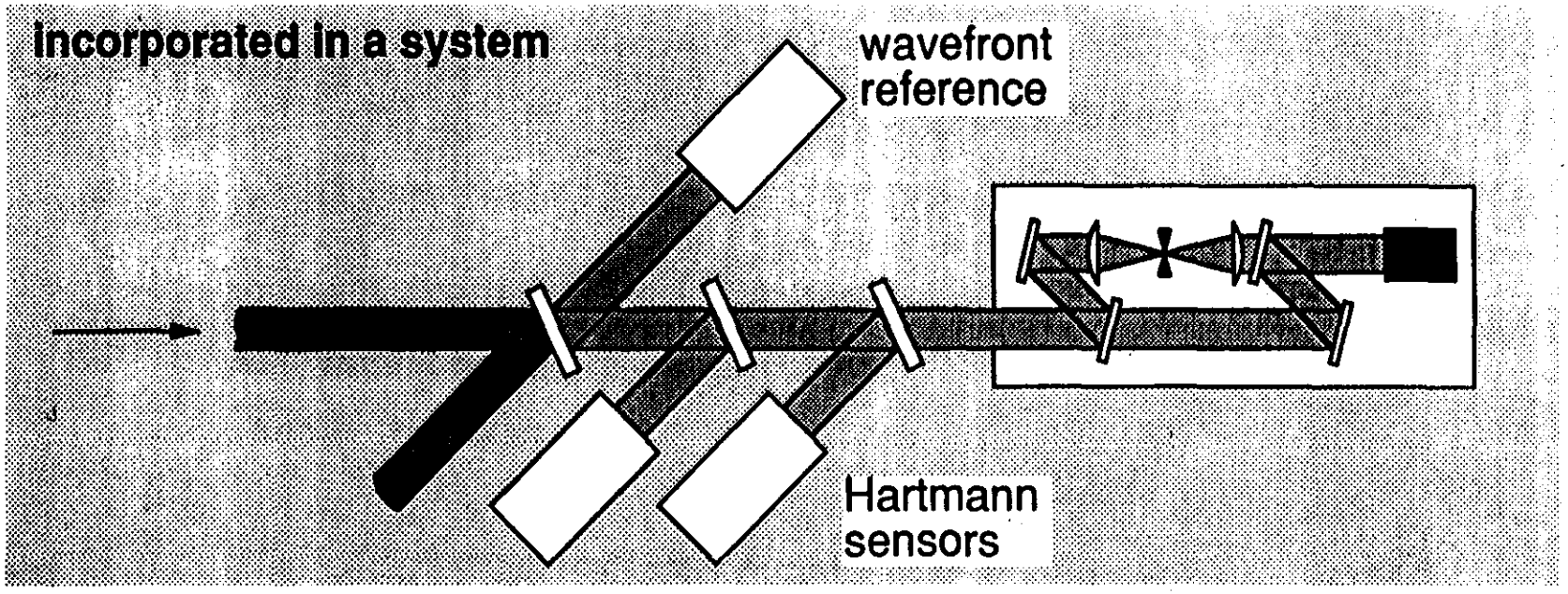

ESB 030891-5

Hartmann sensor measures local wavefront tilt

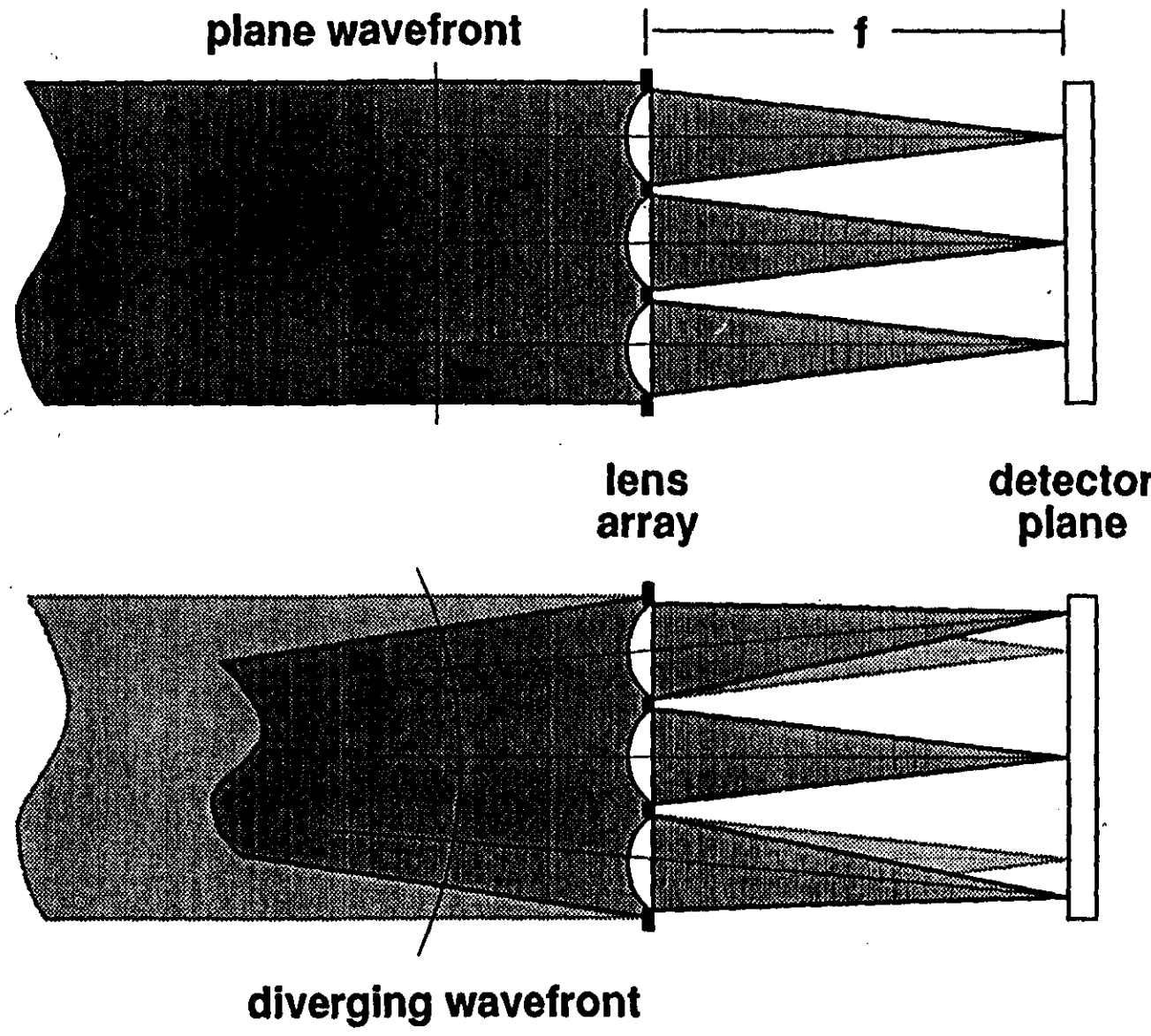

spot displacement
proportional to tilt

ESB 030891-4

Piston deformable mirror

Prerun wavefront correction using deformable mirror guided by a Mach-Zehnder interferometer

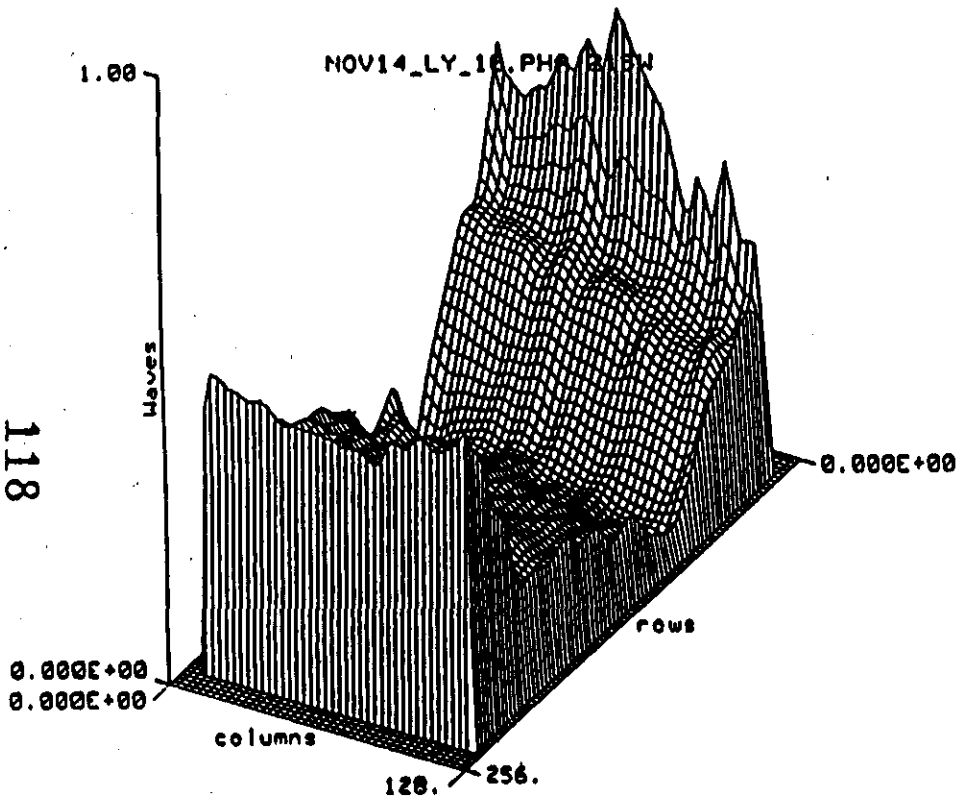

Before correction

Peak-valley	0.76 λ
RMS	0.12 λ
X curvature	0.0 λ
Y curvature	0.31 λ

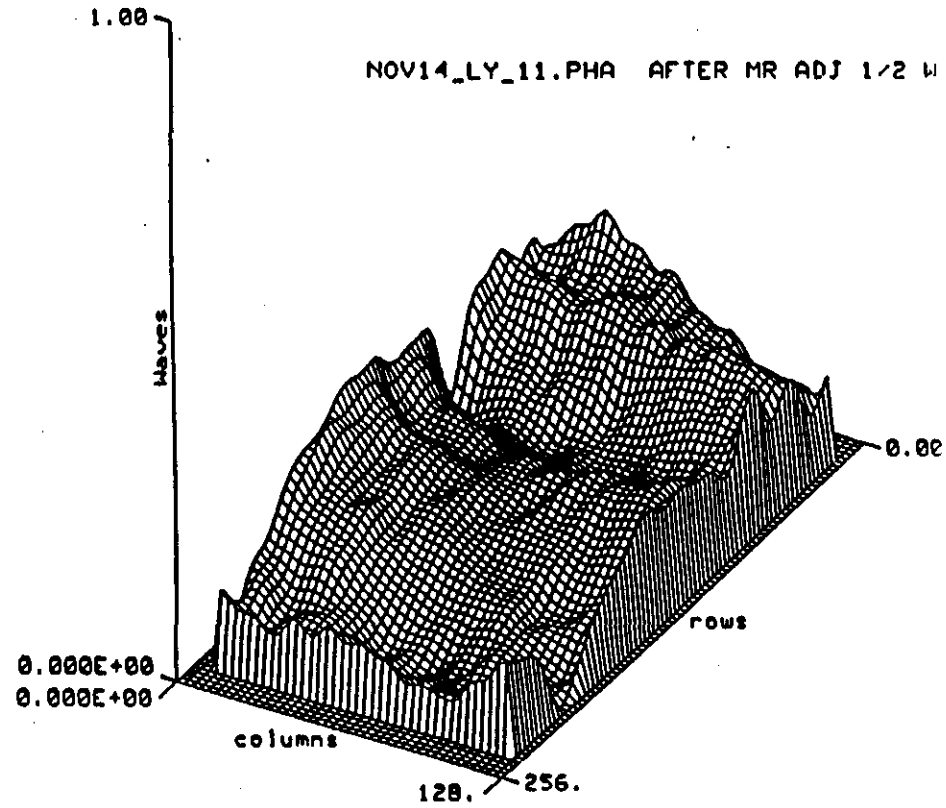

After correction

Peak-valley	0.28 λ
RMS	0.05 λ
X curvature	0.04 λ
Y curvature	–0.01 λ

0.1.3.0790.1882
3MP

Multiple closed loops optically in series

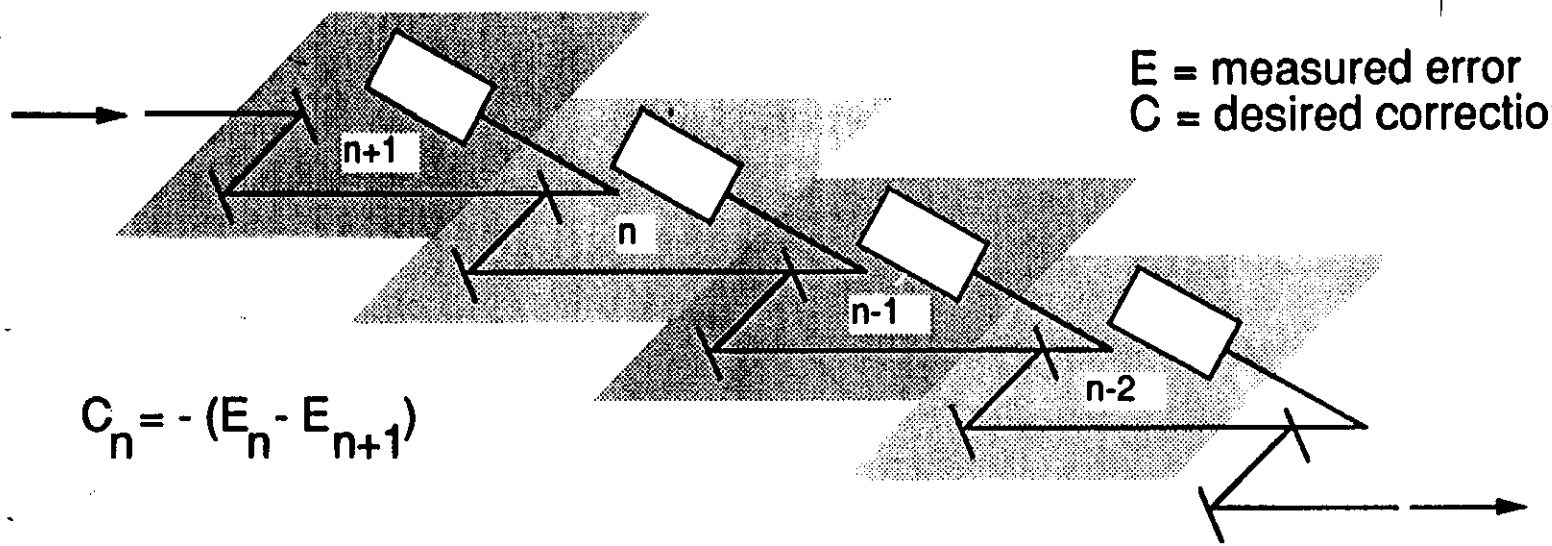

E = measured error
C = desired correction

$$C_n = -(E_n - E_{n+1})$$

- Correct loops one at a time from output toward input.
  Motors can run longer before they influence subsequent frame grabs.

- Correct only that part of the error detected by the current loop but not by the one immediately upstream.
  Avoids correcting for errors which will be corrected by other loops.

Launch Wall / Module Optics Screen 1

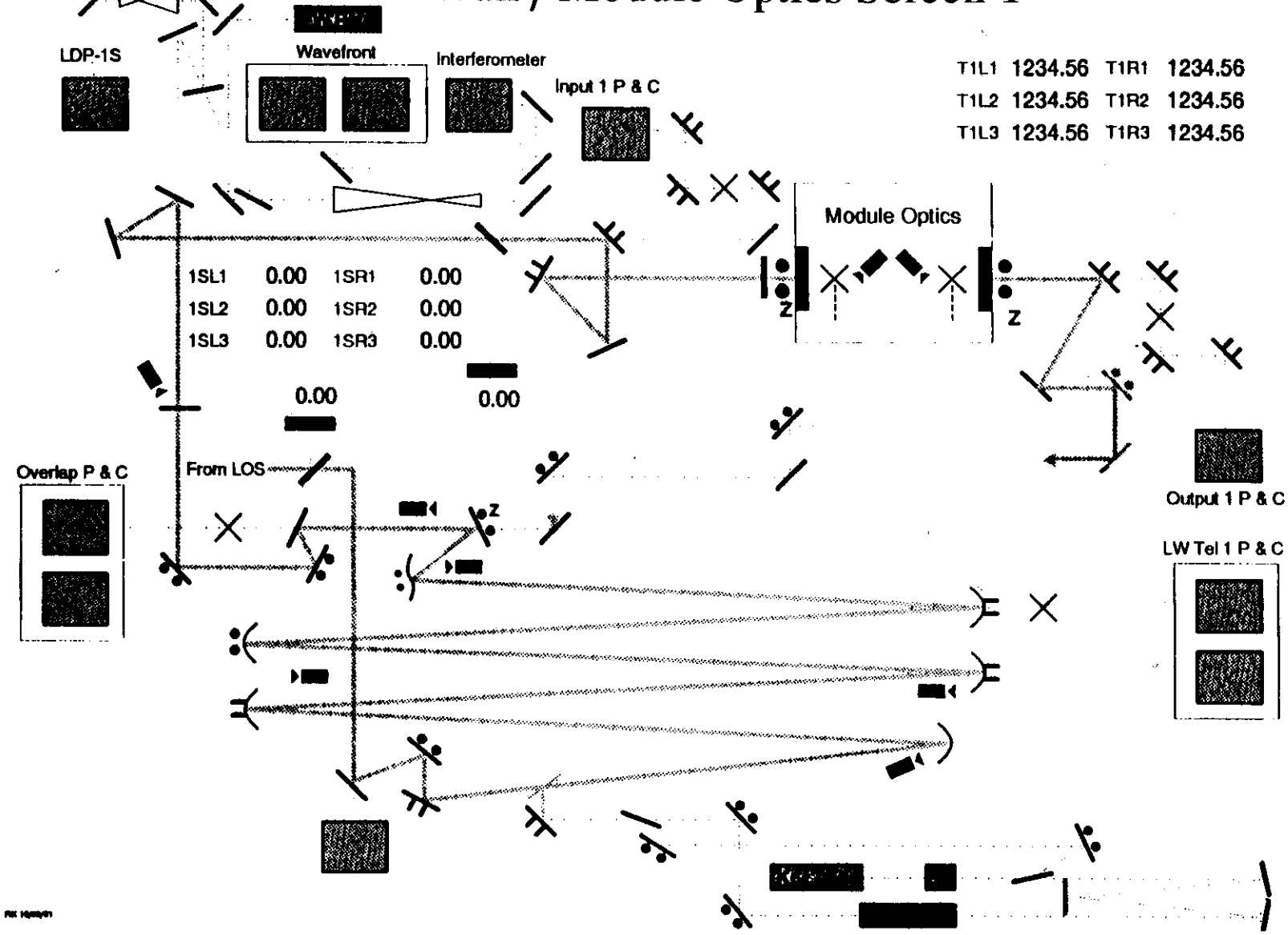

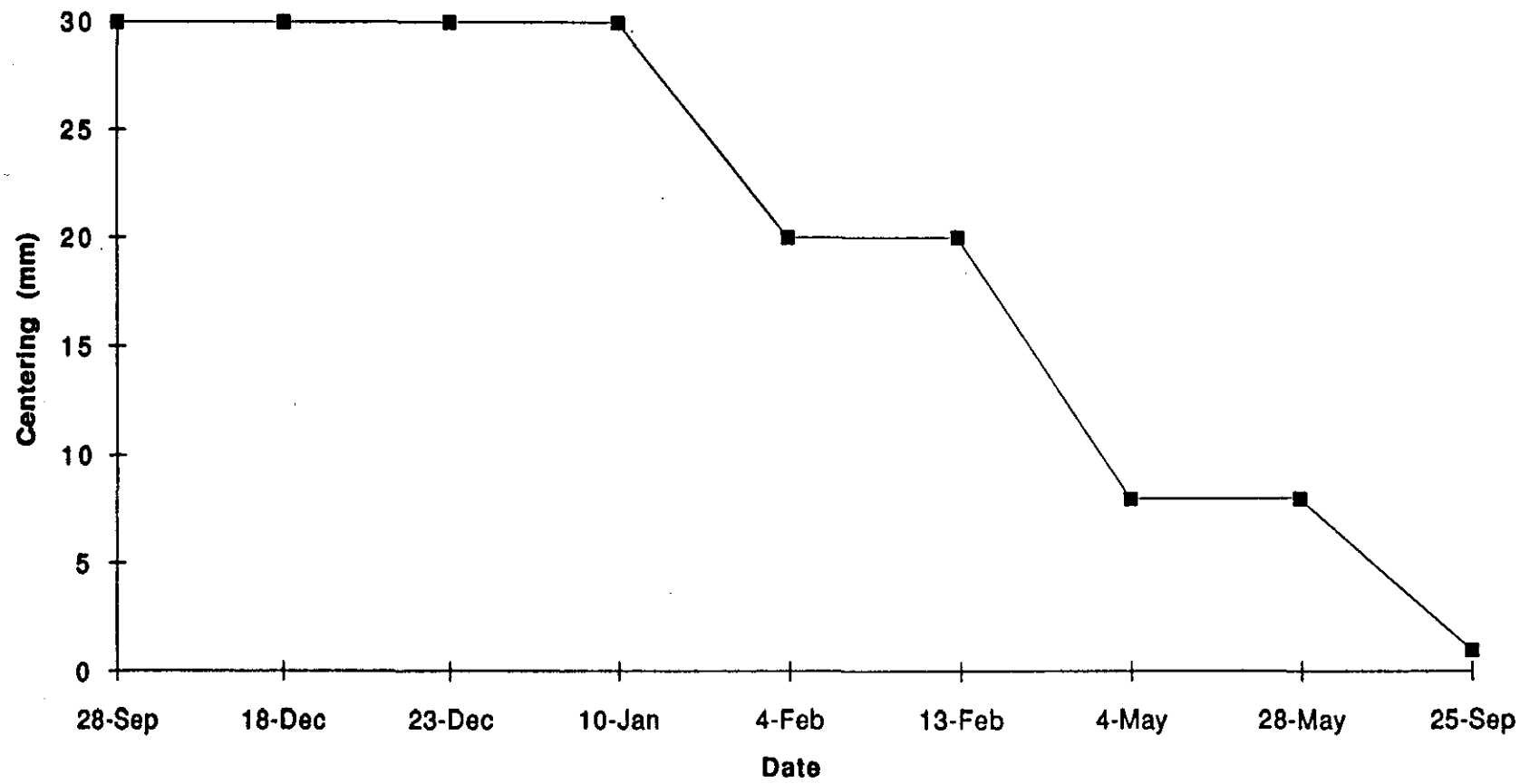
30
25
20
15
10
5
0
Centering (mm)
28-Sep
18-Dec
23-Dec
10-Jan
4-Feb
13-Feb
4-May
28-May
25-Sep
Date

INTERPOLATION SCHEMES FOR ALIGNMENT

A.Ostapchuk

November 17, 1992

1. Quadratic interpolation scheme

QUADRATIC INTERPOLATION SCHEME WAS PROPOSED BY G.MITSELMAKHER AND A.OSTAPCHUK AT MUON ENGINEERING STATUS MEETING-M.I.T. JULY 13,1992 (GEM-TN-92-134), AND DESCRIBED IN THE WORK BY MITSELMAKHER G. AND OSTAPCHUK A.,"NEW APPROACH TO MUON SYSTEM ALIGNMENT", GEM TN-92-202.

THE PRINCIPLES OF THIS SCHEME ARE FOLLOWING:

- TO CONTROL ALL KINDS OF MUON CHAMBER SHIFTS AND ROTATIONS IT IS NECESSARY TO MEASURE AT LEAST SIX VALUES OF FALSE SAGITTA FOR EVERY RECTANGULAR SOLID ANGLE OF MUON SYSTEM, WHICH DOES NOT HAVE CHAMBER GAPS INSIDE;

- SUITABLE INTERPOLATION INSIDE THIS SOLID ANGLE IS QUADRATIC INTERPOLATION ON OPPOSITE X-EDGES AND THEN LINEAR INTERPOLATION ALONG Z-AXIS.

IT WAS SHOWN, THAT THIS SCHEME ALLOWS TO SOFTEN THE REQUIREMENTS TO CHAMBER PLACEMENT SO MUCH, THAT PLACEMENT REQUIREMENTS ARE COMPLETELY DETERMINED BY DYNAMIC RANGE OF MONITORS.

THIS QUADRATIC INTERPOLATION SCHEME HAS DIFFERENT REALIZATIONS. NOW WE ARE GOING TO CONSIDER TWO EXTREME CASES: ONE-TOWER-PER-CHAMBER GEOMETRY AND ONE-TOWER-PER-SECTOR GEOMETRY.

2. One-tower-per-chamber geometry

ADVANTAGES:

- control of chamber deformations;

- moderate requirements to projective monitor accuracy;

- immediate measurement of false sagitta, no error transfer.

DISADVANTAGES:

- necessity to have projective alignment paths for every projective tower of chambers, possible coverage loss.

STUDY OF THIS GEOMETRY SHOWS THAT THE REQUIREMENTS TO MUON SYSTEM PERFORMANCE ARE:

- MUON CHAMBER SHIFTS IN ANY DIRECTION $\leq \pm 5mm$;

- MUON CHAMBER ROTATIONS AROUND ANY AXIS $\leq \pm 3mrad$;

- PROJECTIVE MONITOR ACCURACY $\sigma \leq 30\mu$;

- PROJECTIVE MONITOR "DEFOCUSING" $\leq \pm 3mrad$;

- PROJECTIVE MONITOR FOCUS SHIFT $\leq \pm 30mm$;

- UNIFORM THERMAL EXPANSION/CONTRACTION $\leq 100^0C$;

- TORSION DEFORMATIONS OF MUON CHAMBERS $\leq 3mrad$;

- Z-COORDINATE MEASUREMENT ACCURACY $\sigma \leq 15mm$;

3. One-tower-per-sector geometry

ADVANTAGES:

- projective alignment paths are only at the borders of sector , no coverage loss.

DISADVANTAGES:

- control of chamber deformations is more complex, if not impossible;

- more strict requirements to on-layer monitor accuracy;

- more difficult procedure of false sagitta measurement, error transfer.

THE REQUIREMENTS TO GEM MUON SYSTEM PERFORMANCE ARE MORE RESTRICTIVE THEN IN THE CASE OF ONE-TOWER-PER-CHAMBER GEOMETRY:

- MUON CHAMBER SHIFTS IN ANY DIRECTION $\leq \pm 2.5mm$;

- MUON CHAMBER ROTATIONS AROUND ANY AXIS $\leq \pm 1.5mrad$;

- PROJECTIVE MONITOR ACCURACY $\sigma \leq 30\mu$;

- ON-LAYER MONITOR ACCURACY:

MIDDLE SL $\sigma \leq 10 \sim 15\mu$;

INNER AND OUTER SL $\sigma \leq 20 \sim 25\mu$;

- PROJECTIVE MONITOR "DEFOCUSING" $\leq \pm 1.5 mrad$;

- PROJECTIVE MONITOR FOCUS SHIFT $\leq \pm 15 mm$;

- Z-COORDINATE MEASUREMENT ACCURACY $\sigma \leq 15 mm$.

4. Conclusions

All these estimations were done with some typical tower of GEM muon system. Now we have MonteCarlo program, which can simulate GEM muon system as a whole, and we are intend to investigate detail requirements to every part of barrel and end-caps sectors.

The other task of this program is to study the global alignment of GEM muon system.

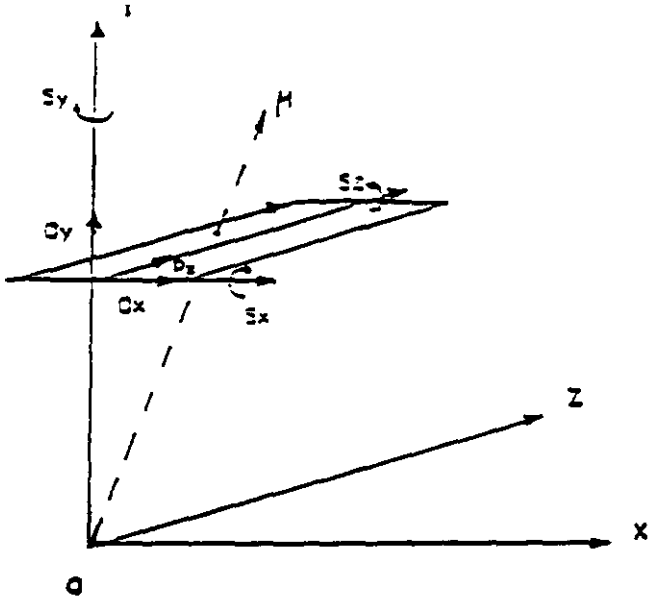

Fig.1 Coordinate System

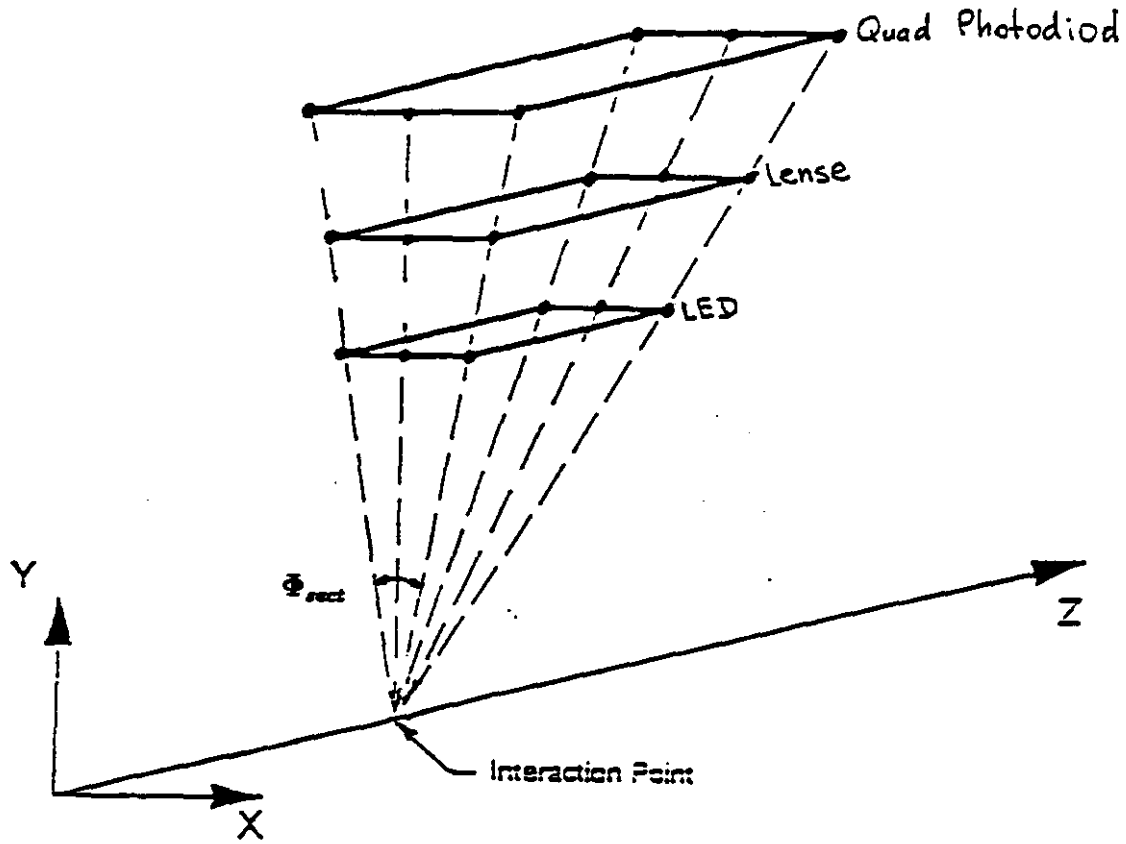

Fig.2 Muon Tower

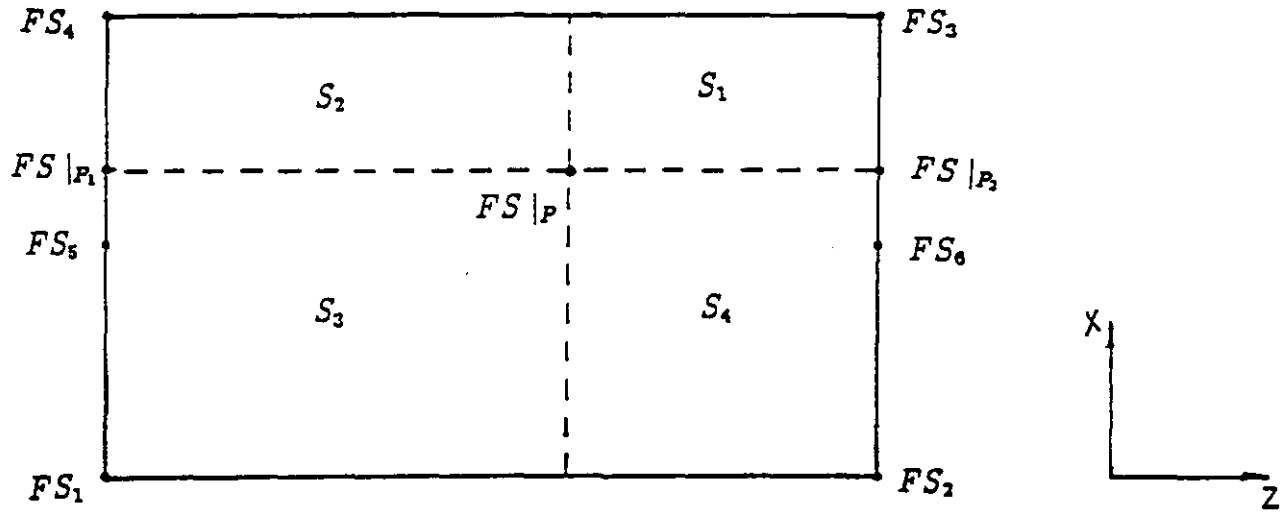

Fig.3 Geometrical Representation of Interpolation Formula

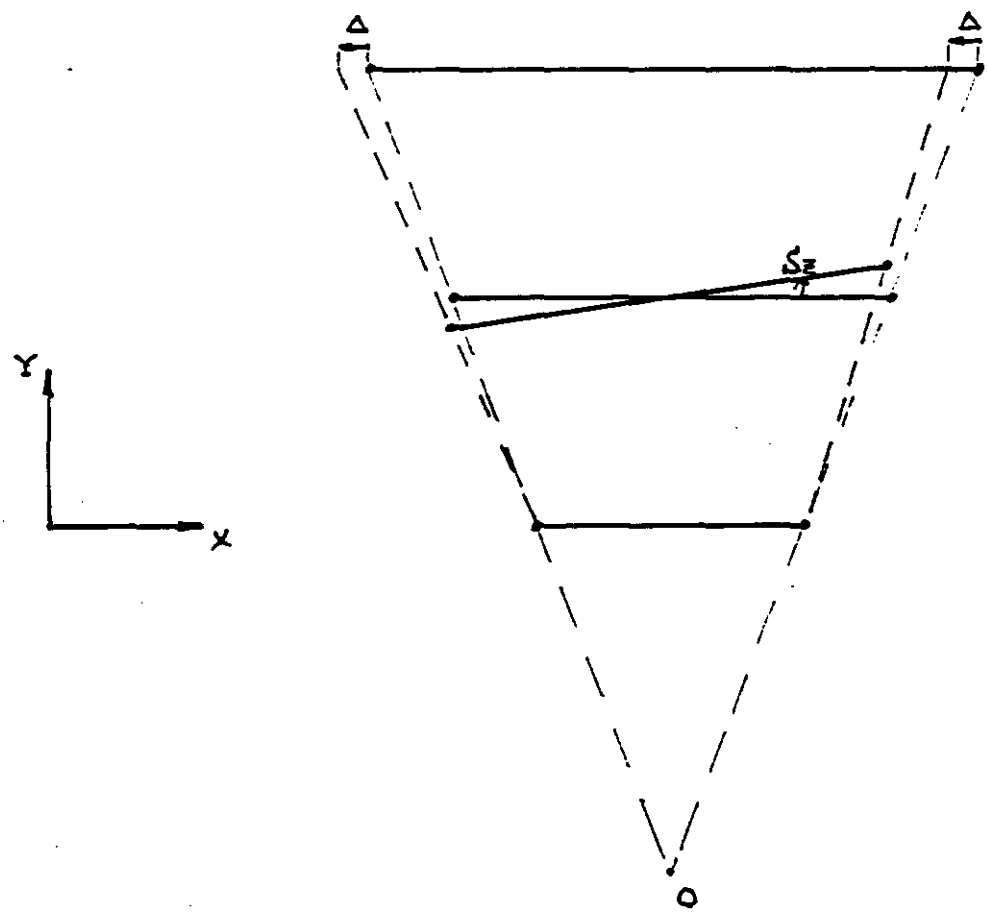

Fig.4 Insufficiency of 4-Point Option

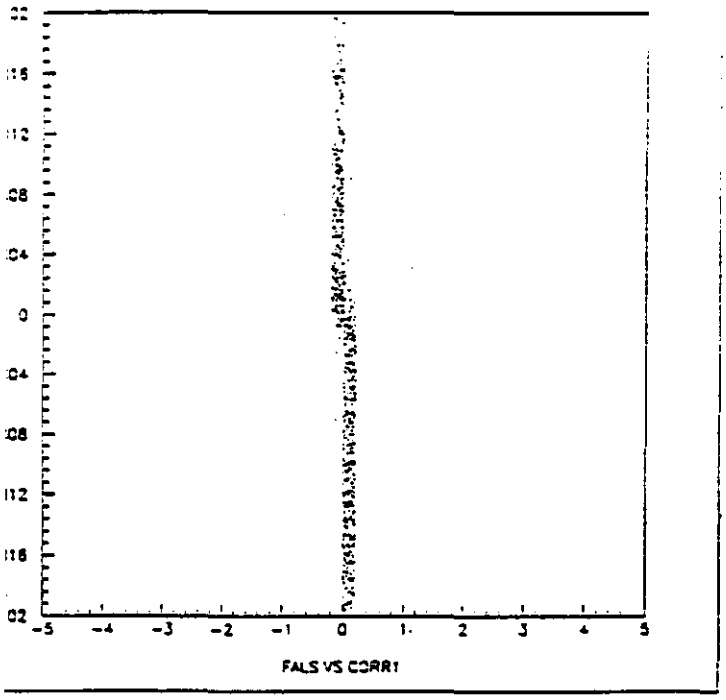

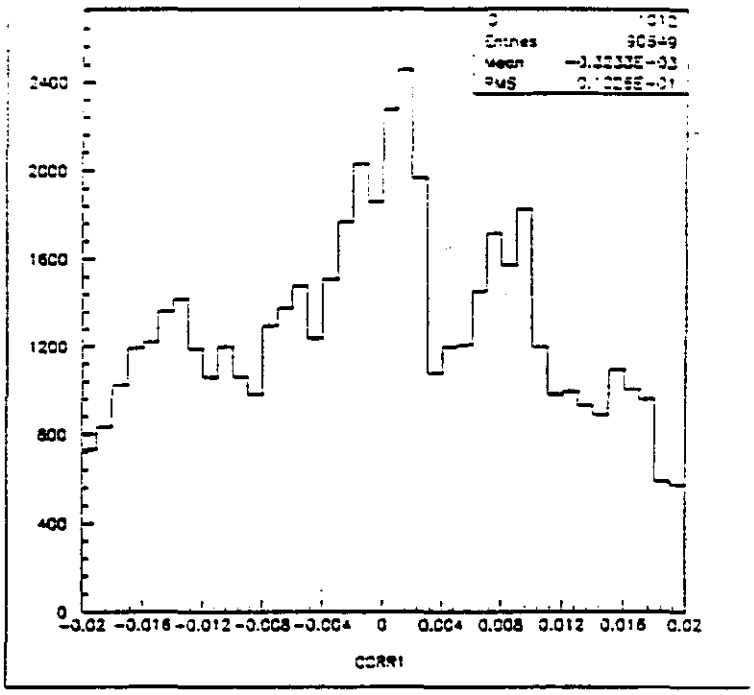

)a Corrected Sagitta(cm) vs False Sagitta(cm)

Fig.9b Corrected Sagitta(cm)

Rotations of Muon Chambers: $Sz \leq \pm 3mrad$; 4-Point Option

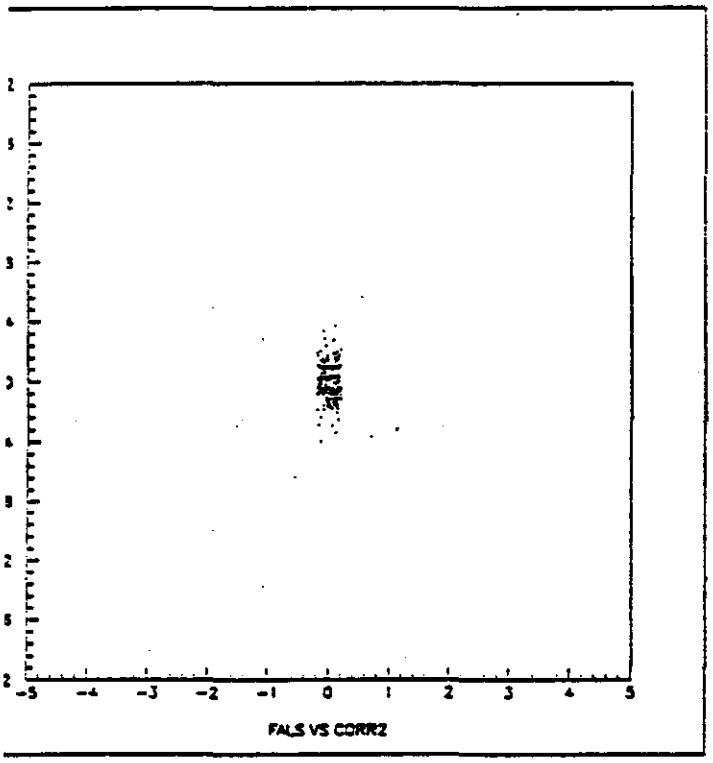

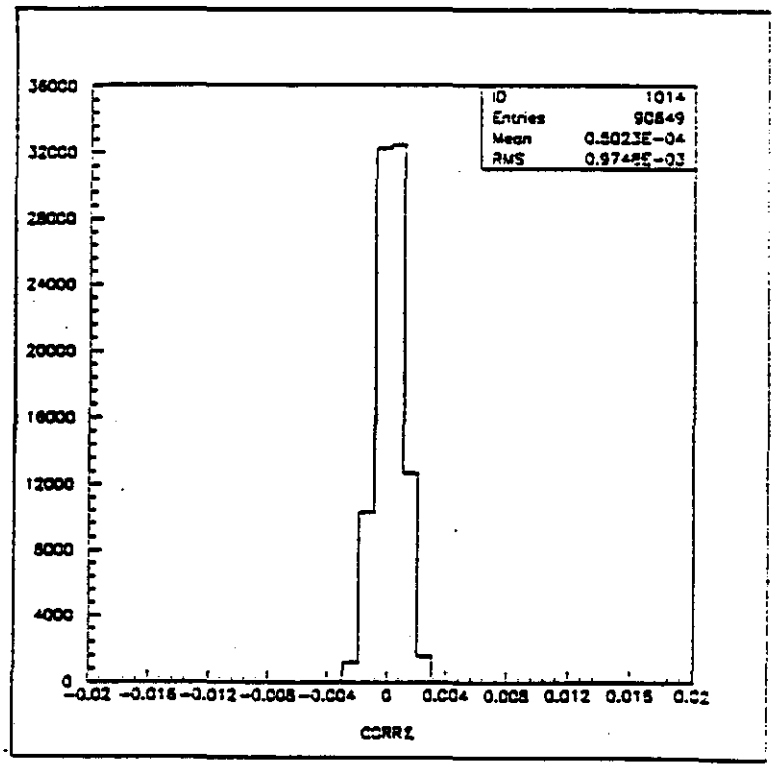

)a Corrected Sagitta(cm) vs False Sagitta(cm)

Fig.10b Corrected Sagitta(cm)

Rotations of Muon Chambers: $Sz \leq \pm 3mrad$; 6-Point Option

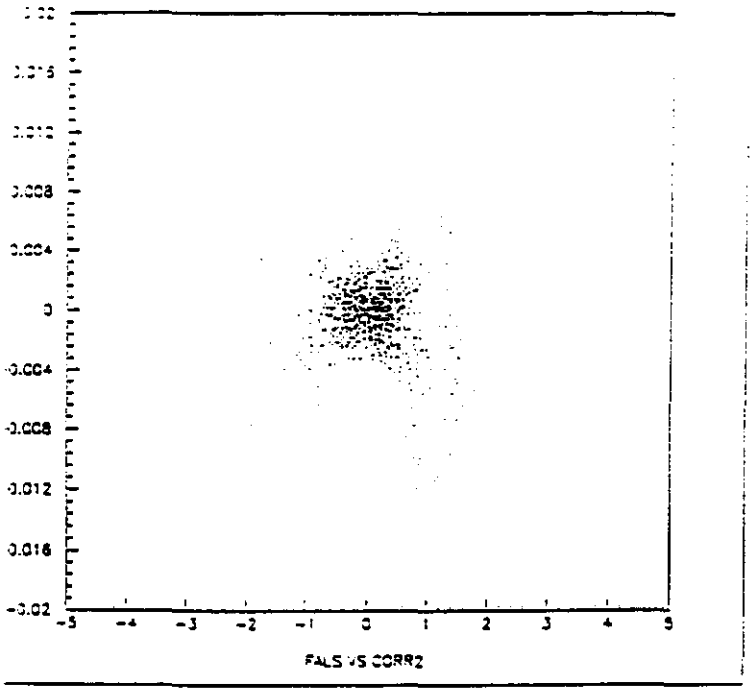

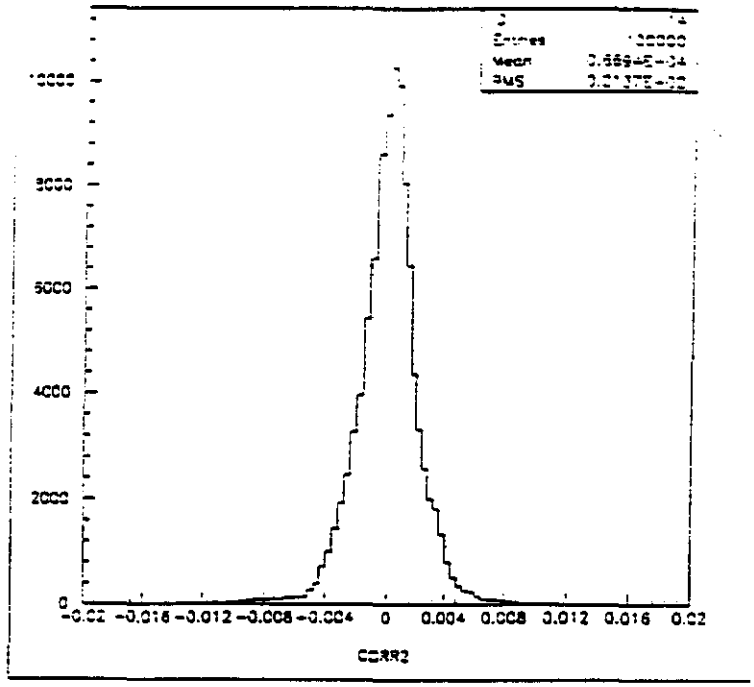

.14a Corrected Sagitta(cm) vs False Sagitta(cm)

Fig.14b Corrected Sagitta(cm)

Shifts and Rotations of Muon Chambers: $Dx, Dy, Dz \leq \pm 5mm$; $Sx, Sy, Sz \leq \pm 3mrad$

Deformations of Muon Chambers: $\Psi_{torqe} \leq \pm 3mrad$, $\Delta t^0 \leq \pm 5^0$

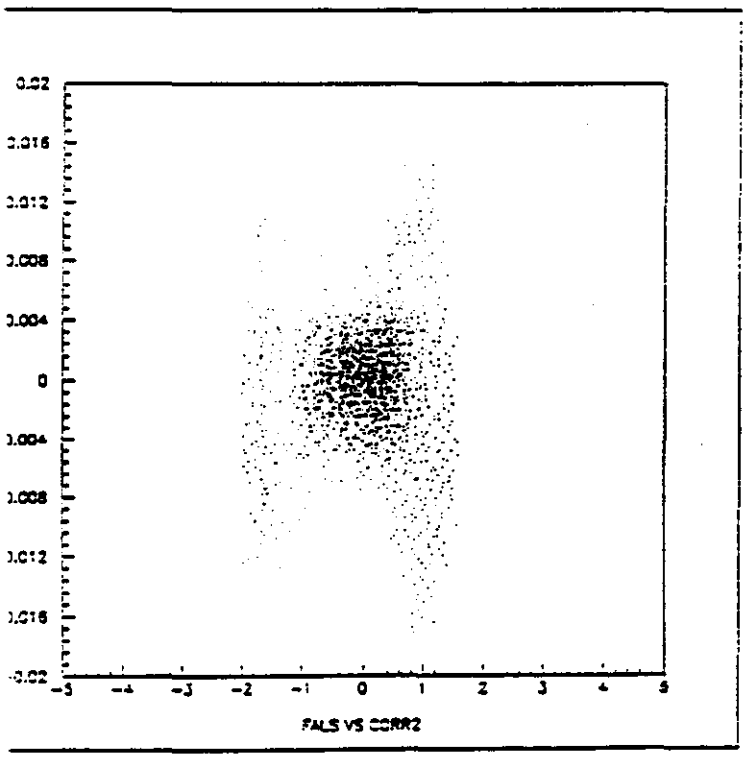

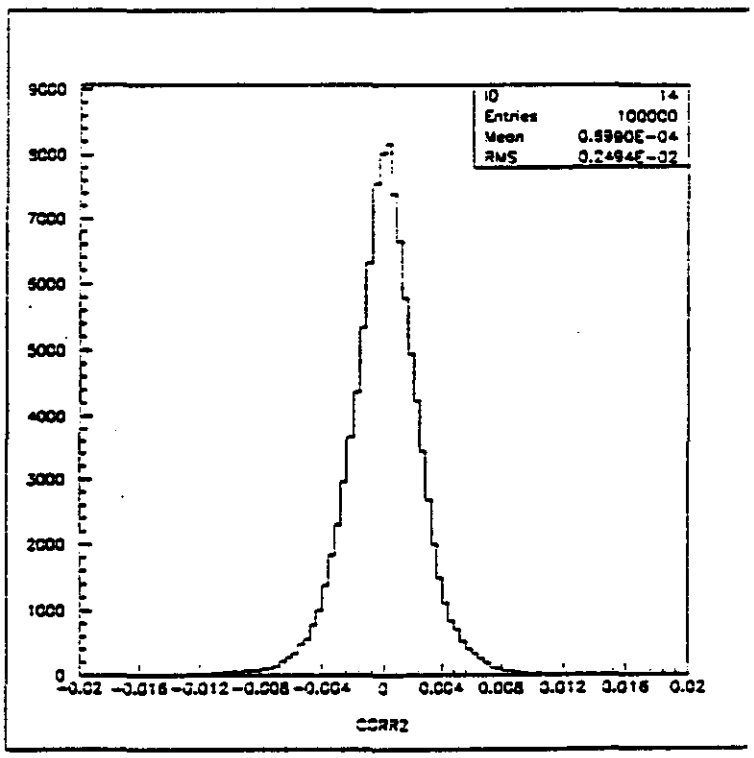

.15a Corrected Sagitta(cm) vs False Sagitta(cm)

Fig.15b Corrected Sagitta(cm)

Shifts, Rotations and Deformations of Muon Chambers as for Fig.14

Non-Projectivity of Particle Trajectory: $\Delta X_{IP} \leq \pm 1cm; \Delta Z_{IP} \leq \pm 5cm$

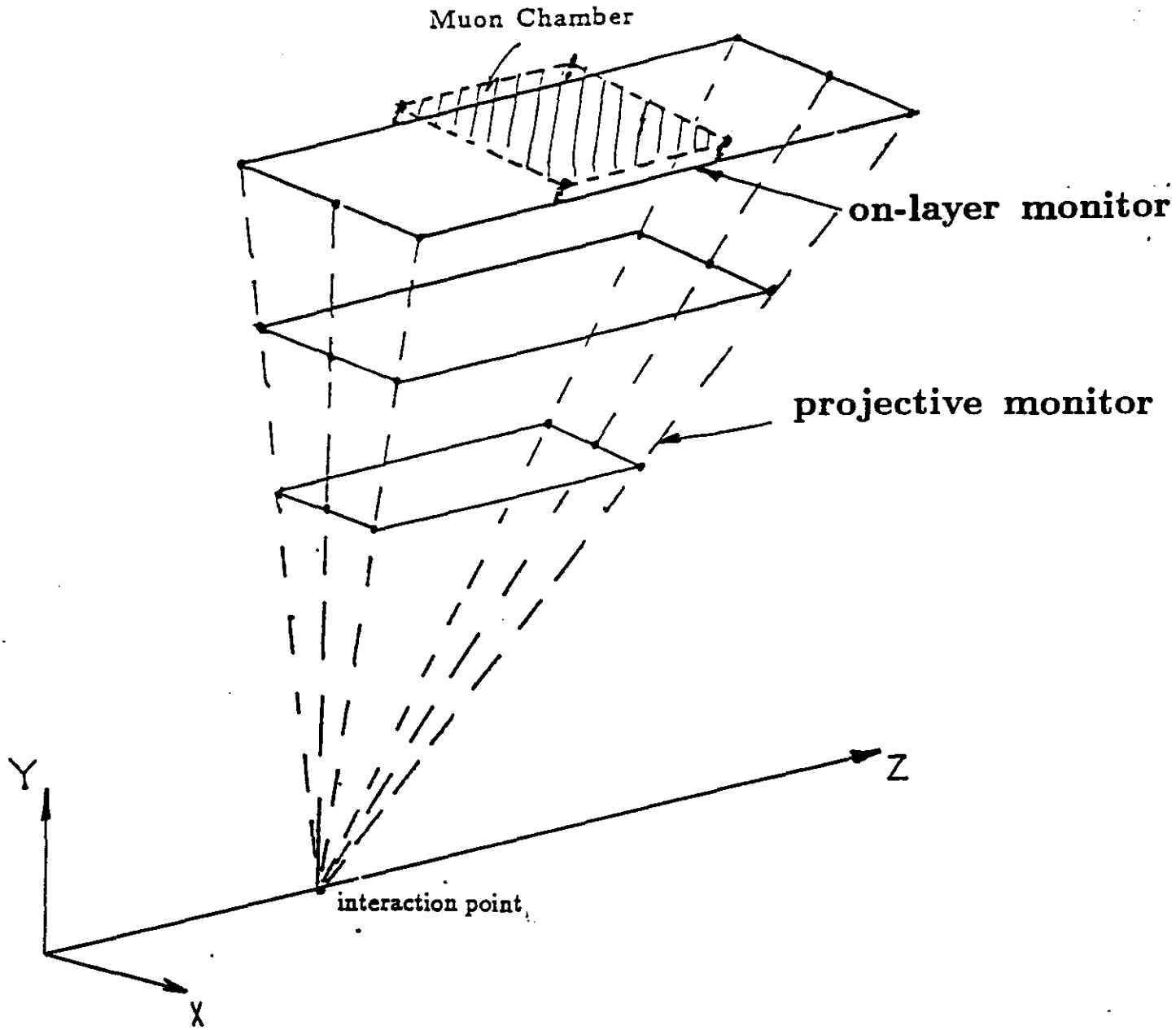

One-tower-per-sector geometry

J. Paradiso

Interpolation Schemes for Alignment

Alignment Analysis

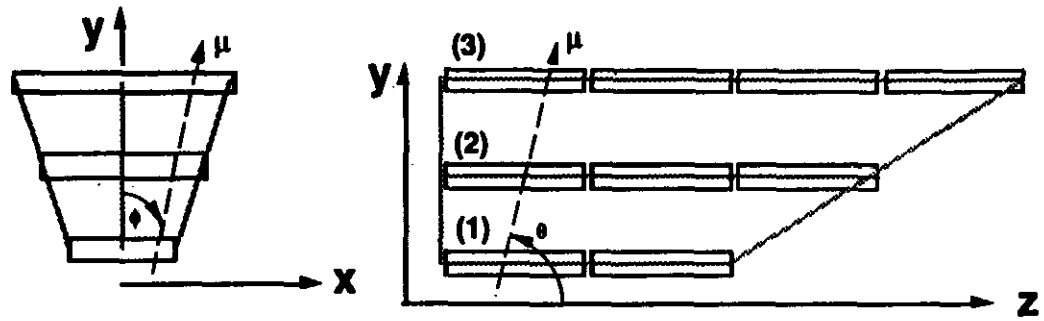

- MATLAB program completed to verify alignment scheme.
- Assume six projective 3-point lines ($\phi = 0, \pm 11.25°, \theta = 90°, 30°$), and multipoint lines along z (pick up each chamber edge relative to endpoints, where projective lines run).
- Three hierarchies of transformations implemented:
  - Rotate each chamber about its center in 3 axes, and translate.
  - Rotate each layer in 3 axes, and translate.
  - Rotate entire hexant relative to IP and translate.
- Straight lines from IP (infinite momentum muons) detected in displaced chambers.
- Alignment measurements taken (multipoint SWAT and nested SM assumed for z-axis).
- Sagitta corrected through linear (z) quadratic (tan ø) interpolation of alignment data, as with Ostapchuk et. al.; corrections investigated.

GEM

Analysis Assumptions

- **Goal of analysis is to view shape of alignment residual**
  - **Ascertain presence/nature of reconstruction inaccuracies**
- **Straightness monitors are modelled in 3-axes:**

$$\vec{\Delta}_a = (\vec{r}_{12} \times \vec{r}_{13}) \times \vec{r}_{13}$$

$\vec{r}_{13}$ = Vector from source to receiver

$\vec{r}_{12}$ = Vector from source to lens

$$m = \vec{\Delta}_a \cdot (\vec{z} \times \vec{r}_{13})$$

Sagitta coordinate

$$q = \vec{\Delta}_a \cdot (|\vec{r}_{13} \times \vec{z}| \times \vec{r}_{13})$$

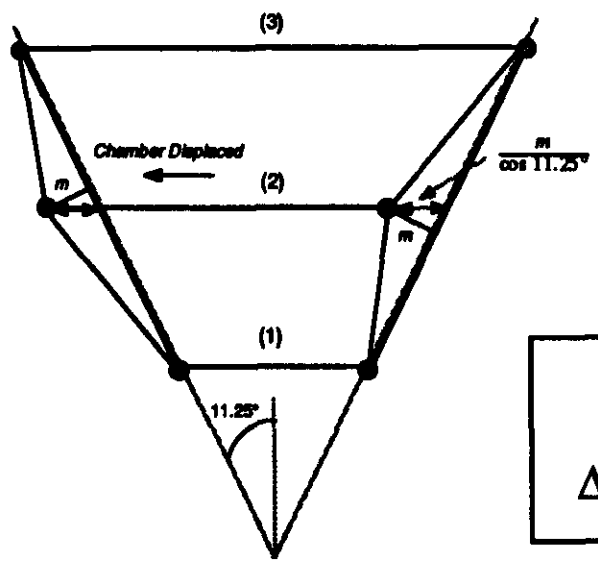

Must divide by cosine of alignment axis inclination to get sagitta projection in chamber plane (as seen by muon)

(Source of small errors...)

Muon Sees:

$$\Delta x = (x2 - x1) - (x3 - x1)\,(y2 - y1)/(y3 - y1)$$

GEM

Some Error Sources

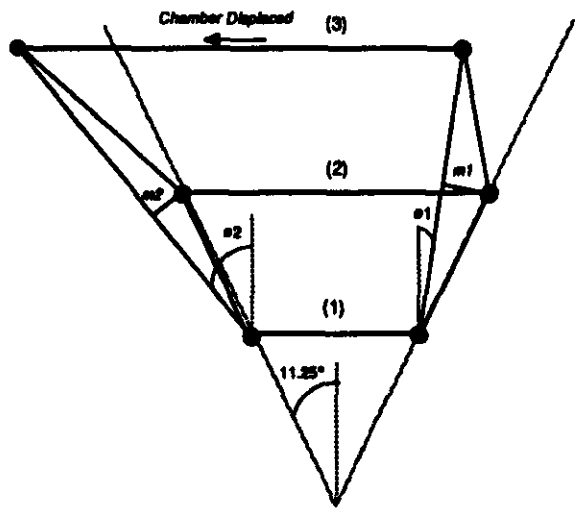

- Top or bottom layer displaced; unequal monitor corrections (incorrectly interpreted as a chamber rotation)

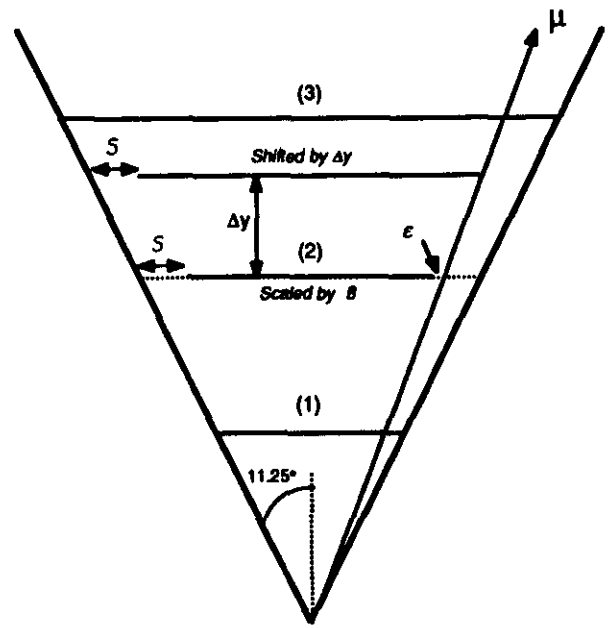

- Correction for vertical displacement of middle chamber and uniform scaling of middle chamber are different, even though monitors may yield identical measurements

Reconstruction for scaling and y-shift are different!

These errors are small, but can become significant for large (circa 5 mm) alignment corrections under this scheme

GEM

Chamber Z-Rotation

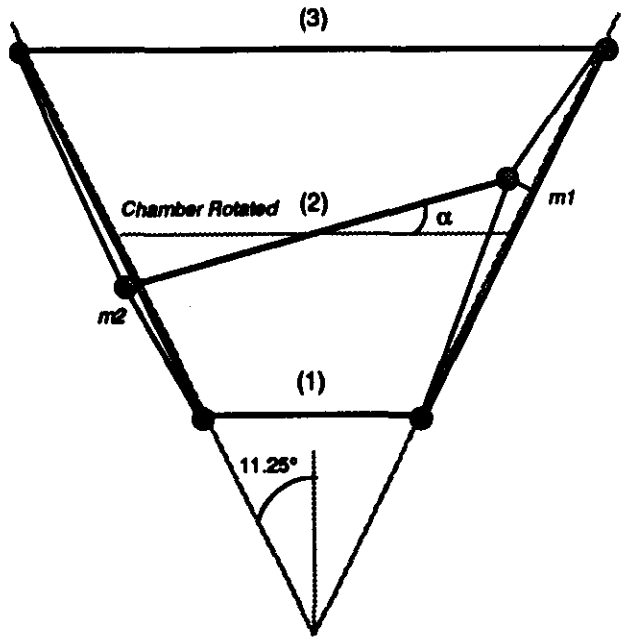

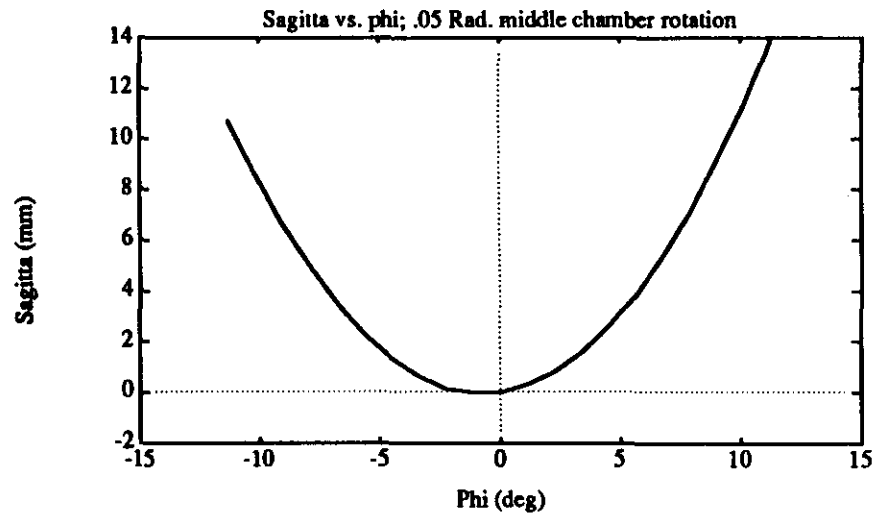

$$\Delta x_{hit} \approx \Delta y \tan\phi + \Delta x_0 = y_2 \left[\tan^2\phi \tan\alpha + \tan\phi\,(1 - \cos\alpha)\right]$$

- Quadratic as seen by Gena et. al.

GEM

Some Higher-order schemes...

- Exact "location" of alignment fixtures becomes ambiguous when chamber rotated; i.e. sagitta gradient produced with chamber coordinate.

  - Motivated by examples where sagitta errors were present at the location of the alignment fixtures.

    => Redefine fixture locations; i.e. ordinates of quadratic fit:

$$q_i = (x_{i(2)} + s_i)/y_2$$

Add the measured sagitta into the fixture location when computing the (tan ø) ordinate of the quadratic fit.

Helps for Δy offsets

$$q' = (y_2 \tan ø + \tfrac{1}{2}\Delta x)/y_2$$

$$\Delta x = Aq'^2 + Bq + C$$

Add half of the originally calculated sagitta into the sensor positions for the quadratic term

Helps for z rotations

- Role of corrections is arbitrary; help for some misalignments, hurt for others => Net information is limited (use optimal estimator?)

GEM

Z-Interpolation with Multipoint Monitors

- Baseline I configuration assumed; i.e. inter-layer alignment measurements are propagated across the superlayers (in z) via multi-point monitors

  - Not necessarily supporting this scheme; necessary at that time because projective paths unable to be defined at intermediate theta

Several interpolations Performed:

- Chamber superlayers first "straightened" analytically along z

  - Shifts subtracted between separate chambers and line between inter-layer alignment paths at 90° and 30° (as measured by multipoint monitor) at each side of the chamber (x and y measured and corrected); linear interpolation used.

- Inter-layer alignment measurements linearly interpolated across superlayer in z.

  - Sensitive to rotations in x & y; i.e. "locations" of alignment fixtures become ambiguous as discussed previously (plus no decoupled z-alignment measurement for correction)

- Quadratic interpolation then carried out with tan ø

Example; "Random" deflection of chambers and layers

3-Point Monitors

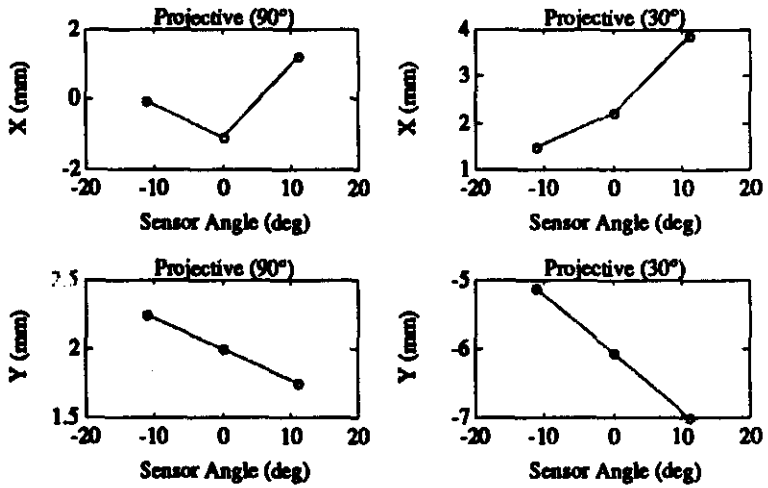

Multipoint Monitors

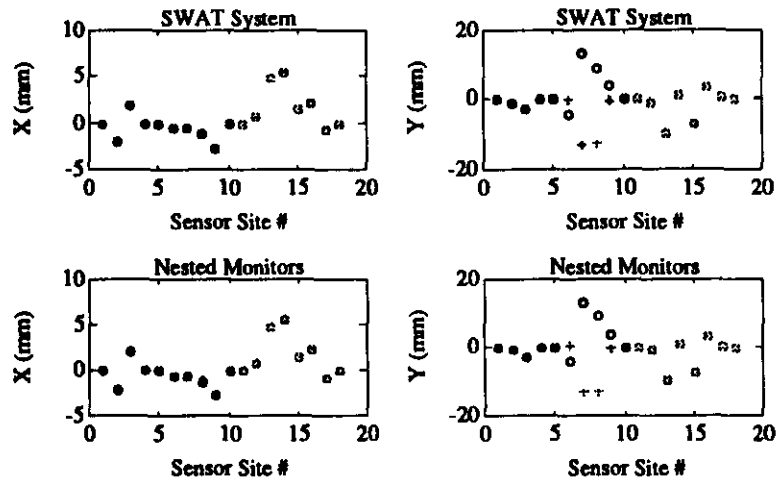

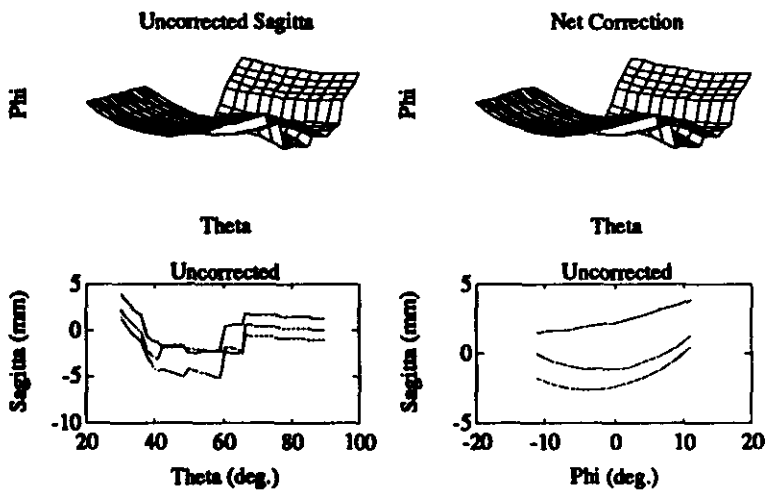

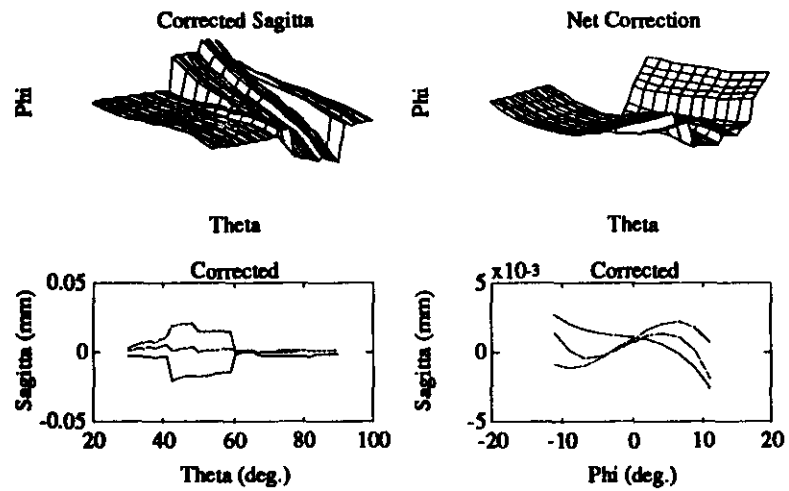

Uncorrected muon sagitta **Corrected muon sagitta**

Worst-case 20 μm reconstruction error from z-interpolation (initial positioning < 20 mm)

GEM

Example; Rotate all superlayers

3-Point Monitors

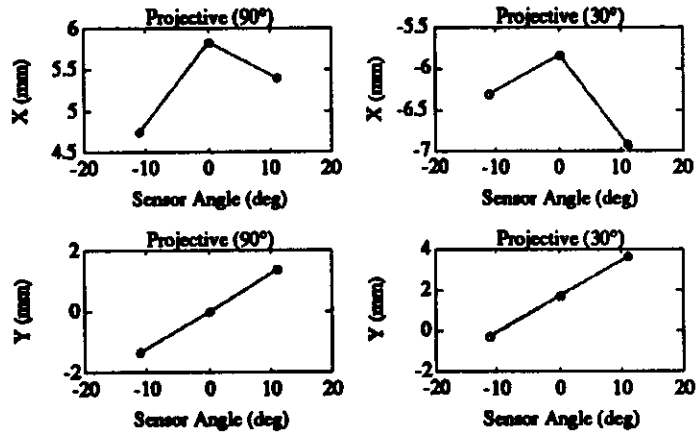

- Rotate outer SL by 1 mr (y), middle SL by 5 mr (z), inner SL by 1 mr (x)
- Projective monitors all within 7 mm (no multipoint; individual chambers unmoved)
- Sagitta residual drops from max. of 7 mm (before correction) to max of 15 μm (after correction)

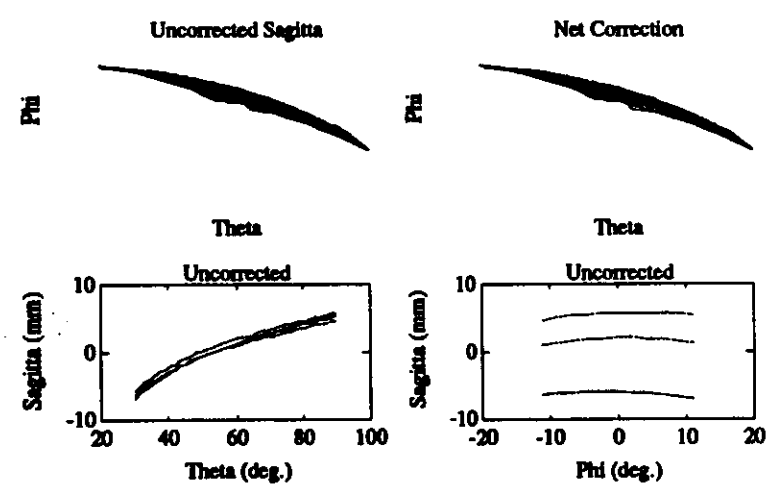

Uncorrected muon sagitta

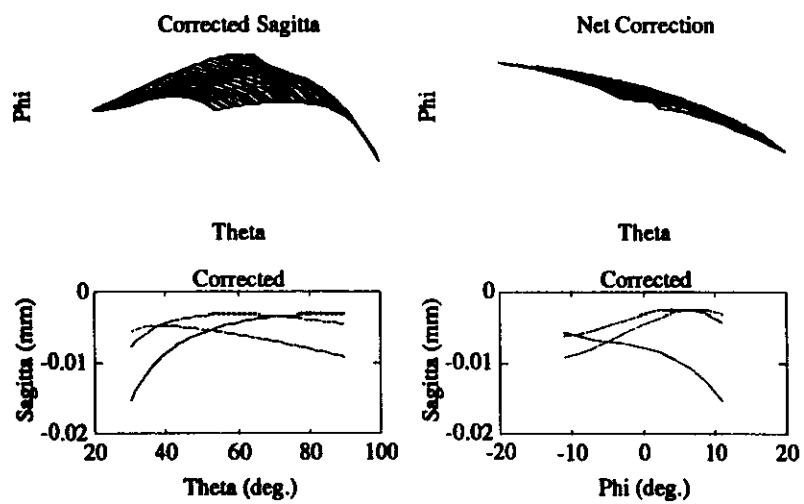

Corrected muon sagitta

146

GEM

Example; Displace projective lines

No offset; Projective case

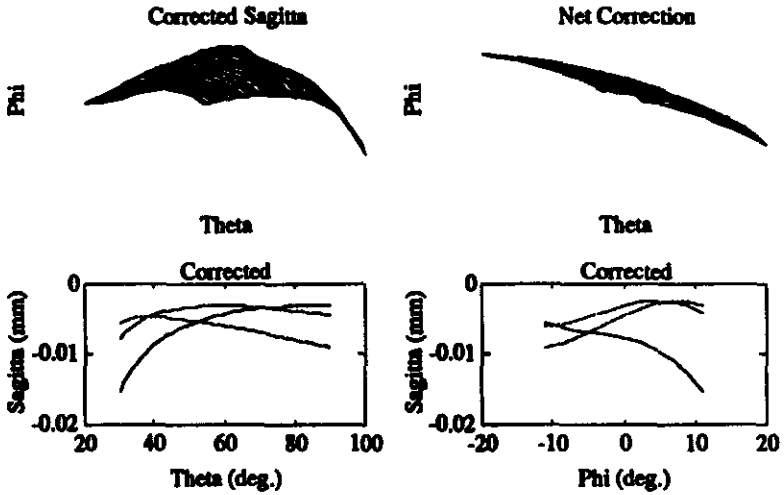

IP offset by 5 cm in x

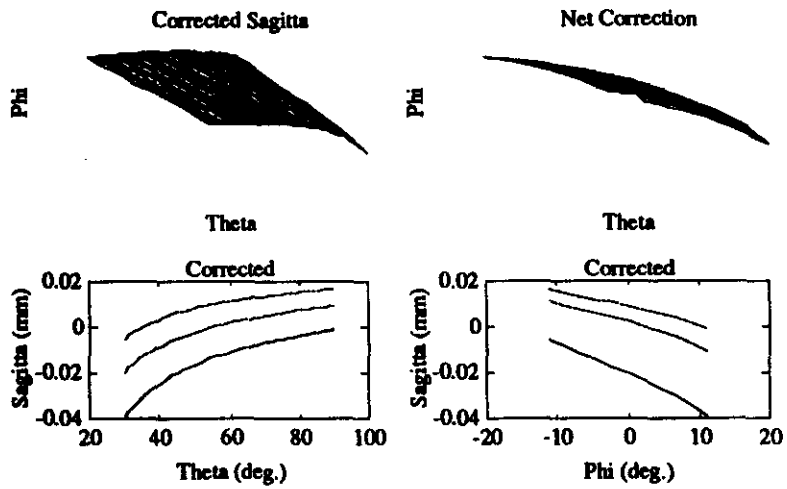

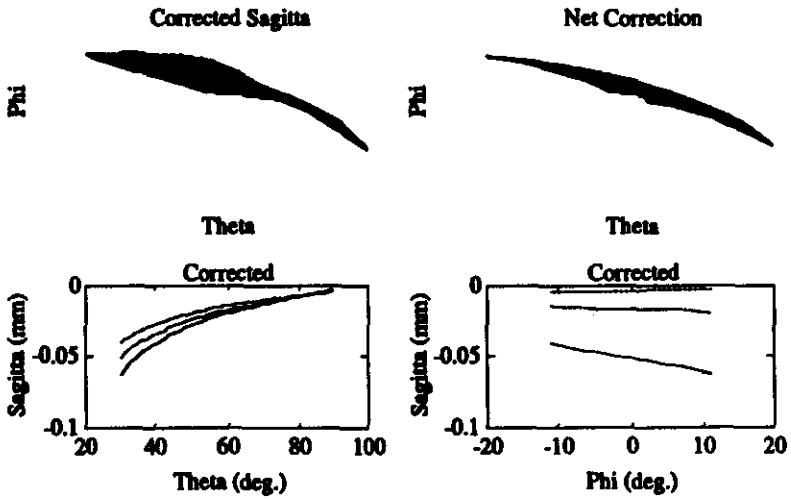

IP offset by 5 cm in y

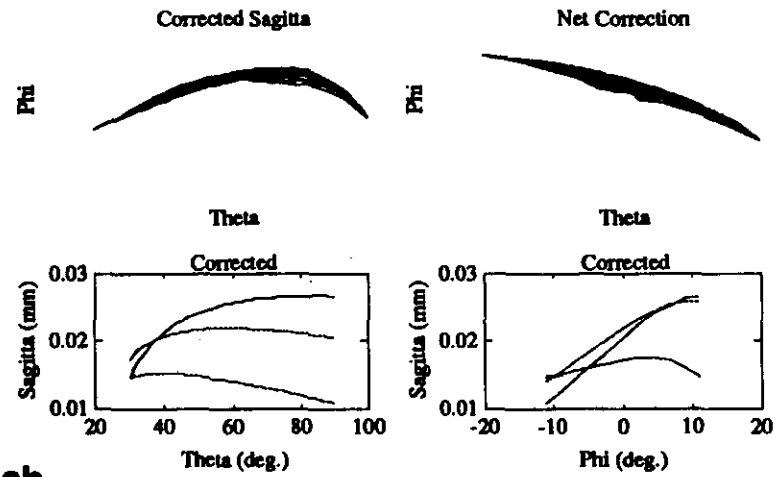

Bunch smear? → **IP offset by 5 cm in z**

Same superlayer rotations as previous case; residuals degrade w. projective loss

GEM

Some Analysis Conclusions...

- Much more detail and more examples in GEM-TN-92-150
- Z-axis multipoint monitors gave perfect compensation of chamber displacements in a superlayer; errors arise when interpolating sagitta errors from projective monitors (gradient-inspired errors; i.e. sensor "location" ambiguity).
- Projective monitors can correct to percent or permil levels, depending on nature of chamber misalignments
- Corrected residuals for large chamber displacements (i.e. 5 mm or above) could begin to approach uncomfortable (i.e. 20 μm) levels, particularly with projectivity of alignment lines displaced by 5 cm.

  => Keep chamber displacements at mm-level, rotations at mr-level; then residuals are adequately limited.

  - Servo inner chamber to keep this range, or use optimal estimator to reduce ambiguities...

  Perhaps I'm being conservative.... (i.e. mean error not tracked, etc.)
- A next step is to determine how chambers warp/deflect, and interpolate these errors into a believable structural model.

R. Sawicki

Global Alignment

Global alignment status

- There is no strategy or reasonably detailed plan yet formulated and agreed to by a concensus of the muon collaboration!!!

- Using background muons may provide vertex location during operation but supportive calculations have not been performed
  - accuracy is unknown

- An external system which transfers muon chamber position to either the tracker or beam postion monitor has not yet been formulated

- Global alignment placement requirements may be relieved by reprogrammable triggering software
  - not yet determined to be feasible
  -

mean position of the composite chambers (the chambers themselves are allowed to have a 50 μm alignment scatter (in ϕ), provided that the superlayer reference is taken at the mean).

Local Alignment (between superlayers)		*Global Alignment (to IP)*
Muon Barrel		
MEASUREMENT ACCURACY	PLACEMENT	PLACEMENT / MEASUREMENT ACCURACY
Bending Coordinate (ϕ): 25 μm	≈ 5mm	ϕ: 5 mm (200 μm goal)
Radial Coordinate (r): ~~60 μm~~		r: 10 mm
Beamline Coordinate (z): ~~1 mm~~		z: 5 mm
Muon Endcaps		
Bending Coordinate (ϕ): 25 μm	≈ 5mm	ϕ: 5 mm (200 μm goal)
Radial Coordinate (r): ~~1 mm~~		r: 4 mm
Beamline Coordinate (z): ~~125 μm~~		z: 10 mm

ALIGNMENT REQUIREMENTS MUST BE REEVALUATED TO REFLECT PAS STRATEGY

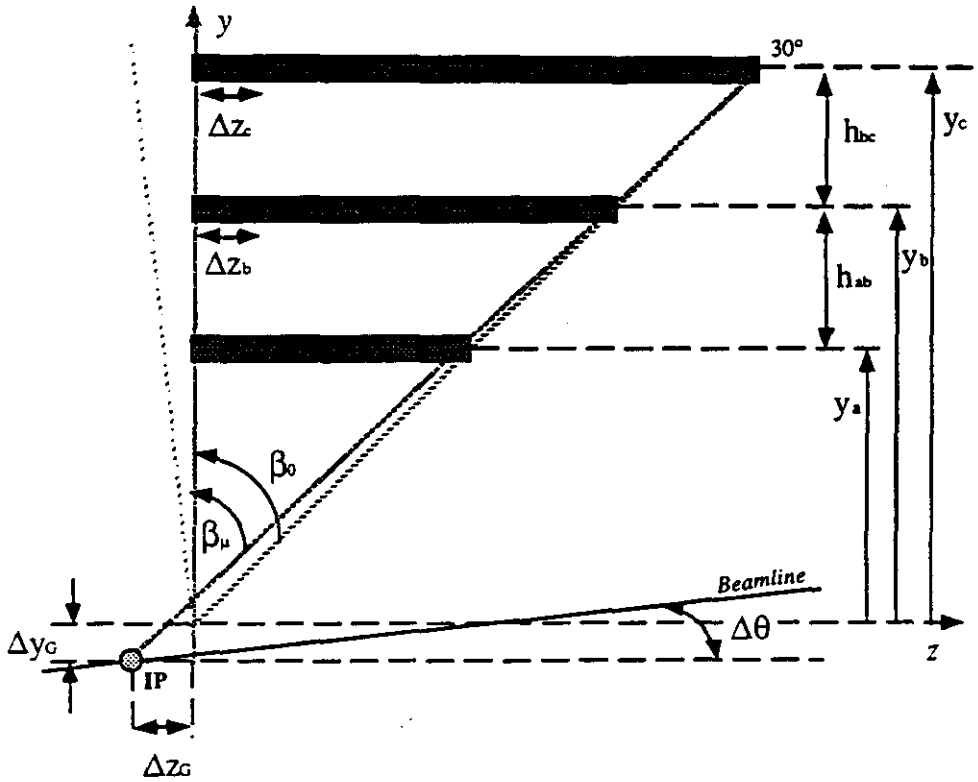

Figure 1: Barrel Requirements Definition; rθ

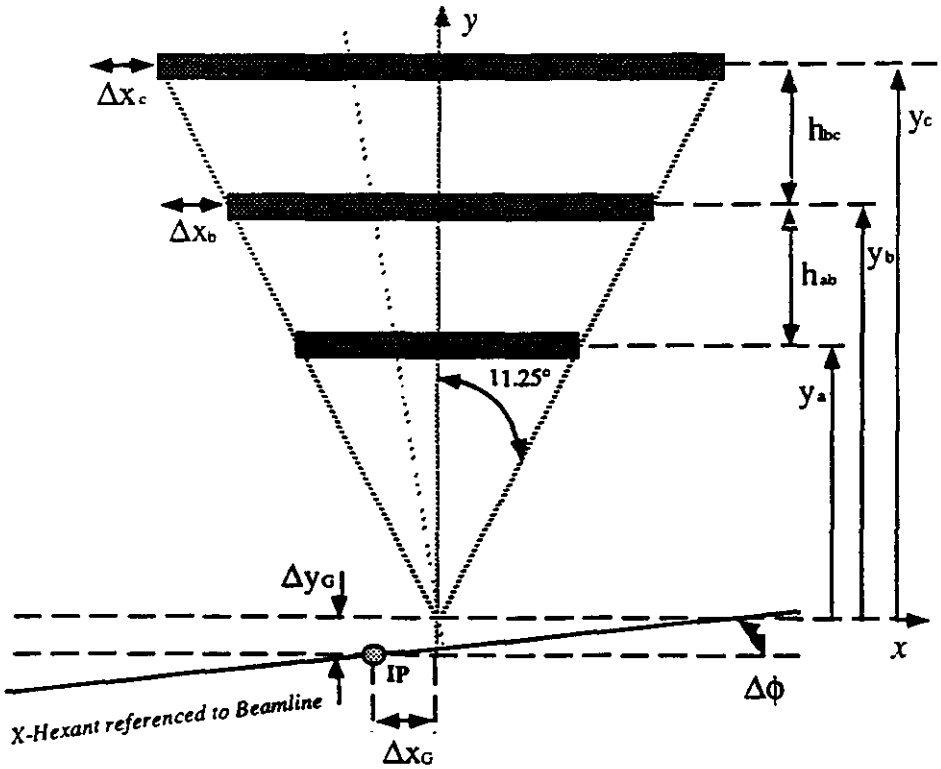

Figure 2: Barrel Requirements Definition; rϕ

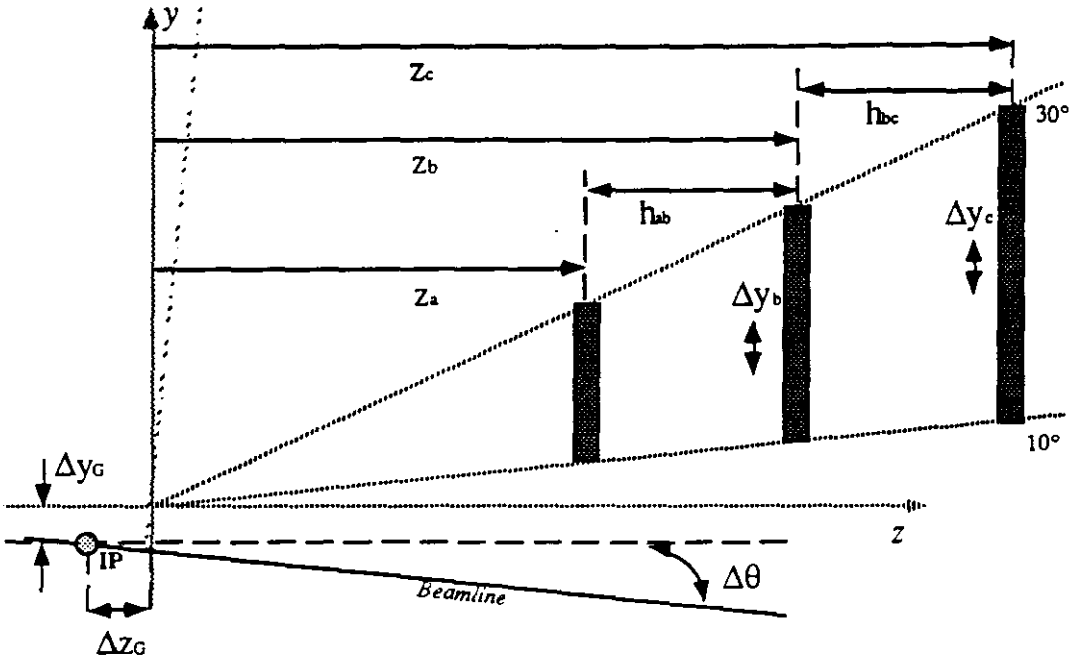

Figure 3: Endcap Requirements Definition; rθ

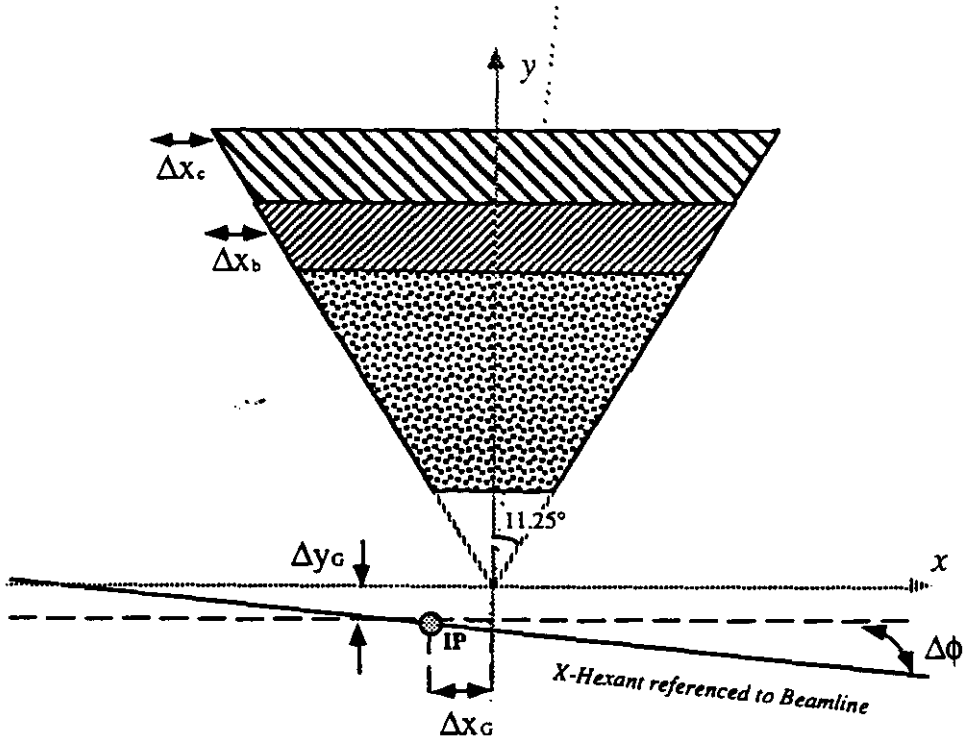

Figure 4: Endcap Requirements Definition; rϕ

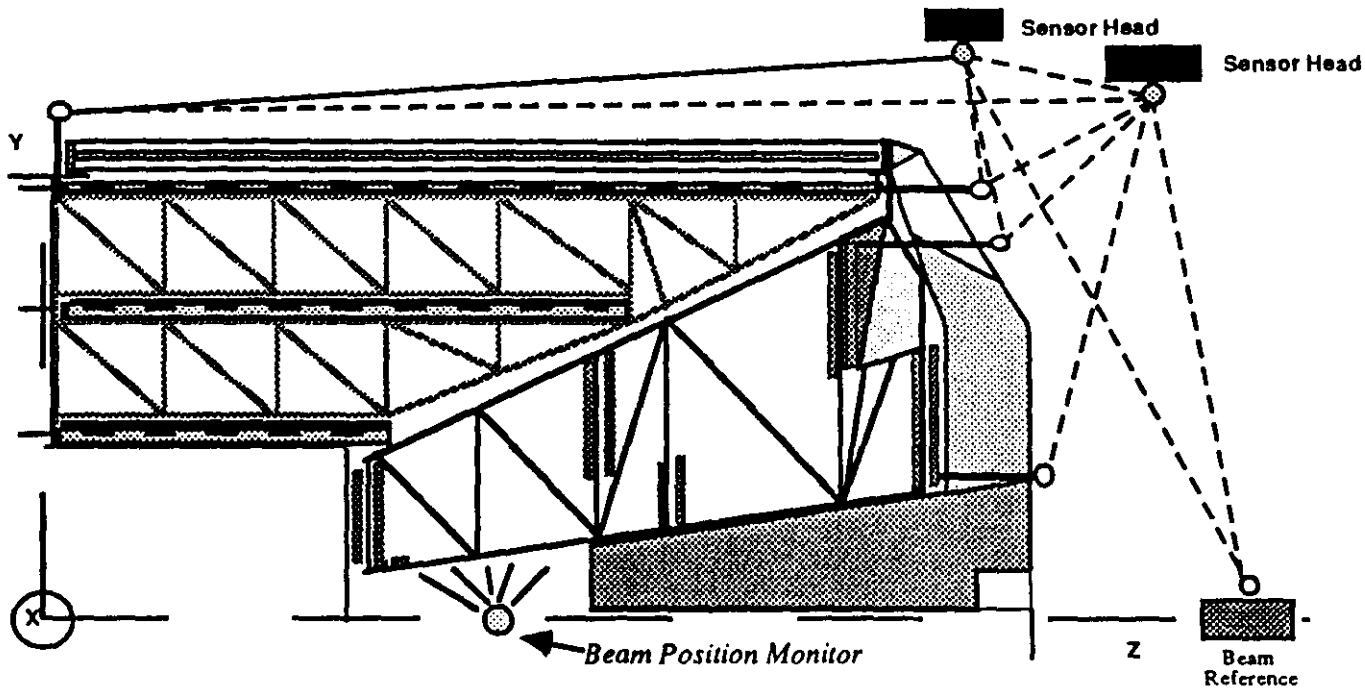

Figure 8: Strategies for Measuring Global Muon System Alignment

on the cathode plane and Hexcell laminate, which will provide a stable reference to the spacepoint measurements. If needed, a measurement of the differential torque between upper and lower chamber layer components (middle, outer layers) can be determined by using bubble levels, of the sort employed in the L3 octant tests[1]. If required, measurements of chamber offsets in the z direction (which couple into the momentum measurement, and must be determined to within 125 μm[14]) can be made with simple mechanical techniques, as suggested for determining the radial chamber spacing in the barrel, or with optical range measuring systems (again, since the alignment lines are

Global placement measurement concepts

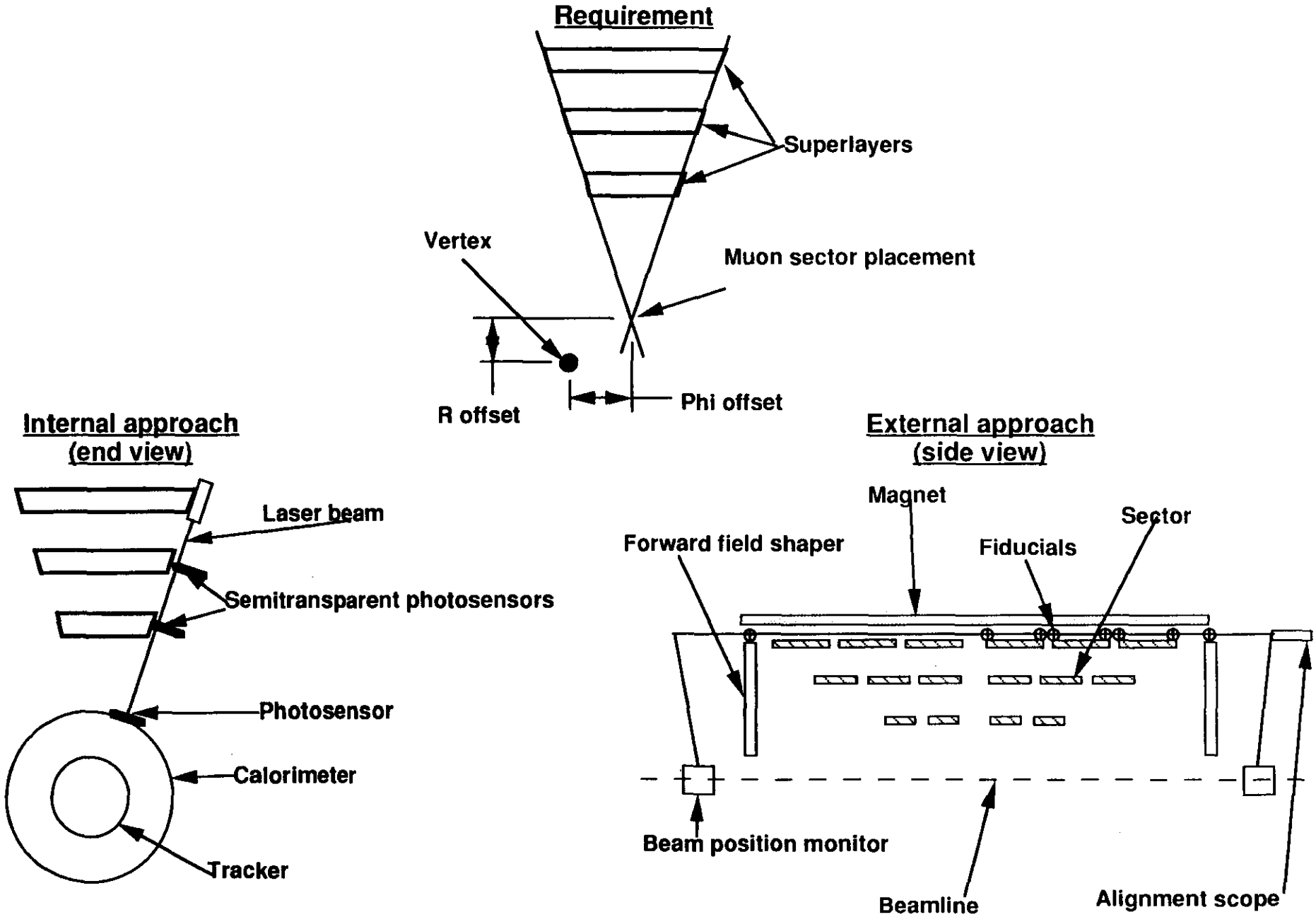

Global placement - in experiment hall

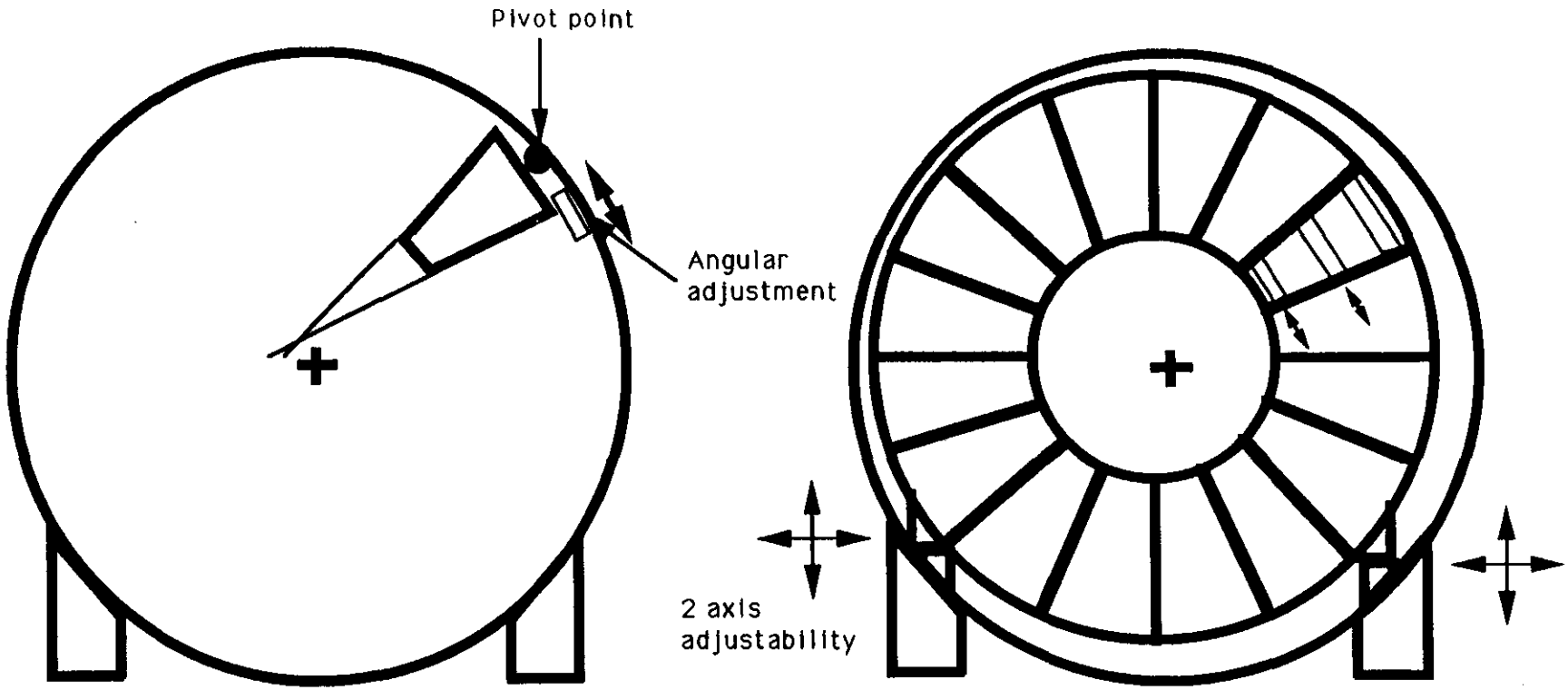

Sector

Global placement is provided by two adjustments on each sector

Bigwheel

Global placement is achieved primarily by Bigwheel adjustments at the four support points. Individual sectors are adjusted by moving superlayers

Near term global alignment effort

- Analysis
  - background muons for vertex location
  - real time reprogrammability of trigger roads
  - global structural deformation analysis (vibration and thermal)
  - global alignment requirements (relative to vertex and other systems)

- Design
  - develop plan for verifying global alignment during installation
    - -- in surface facility
    - -- in magnet
  - conceptualize hardware for real time global alignment monitoring (backup plan)
  - coordinate plans with Geodesy group
  - develop design for global adjustment mechanisms

- Test and development
  - contingent upon results of analysis and design

G. Mitselmakher, A. Ostapchuk

Muons for Global Alignment

BACKGROUND MUONS FOR ALIGNMENT

G.Mitselmakher, A.Ostapchuk

November 18, 1992

1 Single muon events for alignment

MAIN PROCESSES PRODUCING SINGLE MUON ARE:

$$pp \to b\bar{b}, c\bar{c} + X;$$

$$pp \to W^{\pm} + X;$$

$$pp \to Z^0 + X;$$

$$pp \to t\bar{t} + X;$$

$$pp \to \mu^+\mu^- + X \ (Drell\ Yan).$$

THE SINGLE MUON RATE R_μ DEPENDS ON THE p_T^μ-THRESHOLD AND FOR A LUMINOSITY $L = 10^{33} cm^{-2} s^{-1}$ IT IS APPROXIMATELY EQUAL TO:

$$R_\mu \sim 10^3 H : p_T^\mu \geq 20 GeV/c;$$

$$R_\mu \sim 10^2 H : p_T^\mu \geq 50 GeV/c;$$

AND

$$R_\mu \sim 10 Hz : p_T^\mu \geq 100 GeV/c;$$

POSSIBLE WAYS TO USE SINGLE MUONS FOR GEM GLOBAL ALIGNMENT:

Multiple scattering of 100 GeV particle in calorimeter

$\Delta\theta \sim 2$ mrad, $\Delta x_{vertex} \sim 2$ mm for 100 particles ~ 0.2 mm.

- TO SEW TRACK IN MUON SYSTEM TOGETHER WITH TRACK IN CENTRAL TRACKER;
- TO STUDY THE SIMMETRY OF ANGLE DISTRIBUTION FOR EVERY TOWER.

2 Di-muon events for alignment

MAIN PROCESSES PRODUCING DI-MUON EVENTS ARE:

$$pp \rightarrow Z^0 + X;$$

$$pp \rightarrow b\bar{b}, c\bar{c} + X, \ including\ J/\Psi,\ \Upsilon;$$

$$pp \rightarrow \mu^+\mu^- + X\ (Drell\ Yan);$$

$$pp \rightarrow t\bar{t} + X.$$

THE DI-MUON RATE $R_{\mu\mu}$ FOR THE SAME LUMINOSITY IS ESSENTIALLY GIVEN BY Z-DECAYS:

$R_{\mu\mu} \sim$ SEVERAL HZ FOR $p_T^\mu \geq 20GeV/c$.

DI-MUON EVENTS COULD BE USED FOR DIFFERENT TOWER OF MUON SYSTEM RELATIVE ALIGNMENT.

$Z^0 \to \mu^+\mu^-$ DECAY FOR GEM GLOBAL ALIGNMENT

G.Mitselmakher, A.Ostapchuk

November 18, 1992

1 $Z^0 \to \mu^+\mu^-$ decay as a tool for detector calibration

THIS IS THE UNIQUE PROCESS:

- WELL MEASURED VALUES OF Z-BOSON MASS AND WIDTH:

$$m_Z = 91.173 \pm 0.020 GeV$$

AND

$$\Gamma_Z = 2.487 \pm 0.010 GeV;$$

- LARGE BRANCHING RATIO FOR TWO MUONS MODE:

$$Br(\mu^+\mu^-) = (3.34 \pm 0.04)\%$$

- HIGH PRODUCTION CROSS SECTION AT SSC ENERGY:

$$\sigma(pp \to Z^0 X \to \mu^+\mu^- X) \geq 10^3 pb; (p_T^\mu \geq 25 GeV/c)$$

SO, THE RATE OF $Z^0 \to \mu^+\mu-$ EVENTS WILL BE 1-2 HZ, AND IN 10^7S (THE USUAL ONE YEAR RUN) MORE THAN 10 MILLIONS MUON PAIRS COMING FROM Z PARTICLES CAN BE PRODUCED AND USED FOR GEM CALIBRATION.

2 Di-muon mass resolution factors

GEM MUON SYSTEM MEASURES THE FOLLOWING PARAMETERS OF A PARTICLE:

- p_T - TRANSVERSE MOMENTUM OF PARTICLE;
- ϕ - POLAR ANGLE;
- θ - AZIMUTHAL ANGLE;

WE HAVE TO EXPRESS THE VALUE OF DI-MUON MASS IN TERMS OF THESE PARAMETERS:

$$m^2_{\mu_1\mu_2} = 4p_{T_1}p_{T_2}(sin^2\Delta\phi + \frac{sin^2\Delta\theta}{sin^2\Theta - sin^2\Delta\theta}),$$

WHERE

$$\Delta\phi = \frac{\phi_1 - \phi_2}{2},$$

$$\Delta\theta = \frac{\theta_1 - \theta_2}{2},$$

AND

$$\Theta = \frac{\theta_1 + \theta_2}{2}.$$

POLAR AND AZIMUTHAL ANGLES ENTER IN THIS EXPRESSION BY DIFFERENT WAYS,BECAUSE TOTAL MOMENTUM DEPENDS ONLY ON AZIMUTHAL ANGLE:

$$p_{tot} = \frac{p_T}{sin\theta}.$$

FACTORS AFFECTING DI-MUON MASS RESOLUTION ARE:

- TRANSVERS MOMENTUM RESOLUTION;
- MULTIPLE SCATTERING IN THE CALORIMETER;
- INTRINSIC ϕ AND θ RESOLUTION OF THE MUON SYSTEM;
- GLOBAL MISALIGNMENT OF THE MUON SYSTEM.

TRANSVERSE MOMENTUM RESOLUTION DOMINATES OVER MULTIPLE SCATTERING AND INTRINSIC ANGLE RESOLUTION OF THE MUON SYSTEM.

3 $Z^0 \to \mu^+\mu^-$ for GEM global alignment

THE FEATURES OF THIS DECAY ALLOWS TO DEVELOP THE PROCEDURE FOR GEM MUON SYSTEM BOOTSTRAP.

WE PROPOSE TO USE THREE TYPES OF MUON TOWER ALIGNMENT:

- ALIGNMENT OF MUON TOWER RELATIVE TO GEM GLOBAL FRAME;
- ALIGNMENT OF MUON TOWER RELATIVE TO THE REST OF GEM MUON SYSTEM;
- ALIGNMENT OF MUON TOWER RELATIVE TO OTHER MUON TOWER.

$P_{Z_0} = 50\ GeV/c$

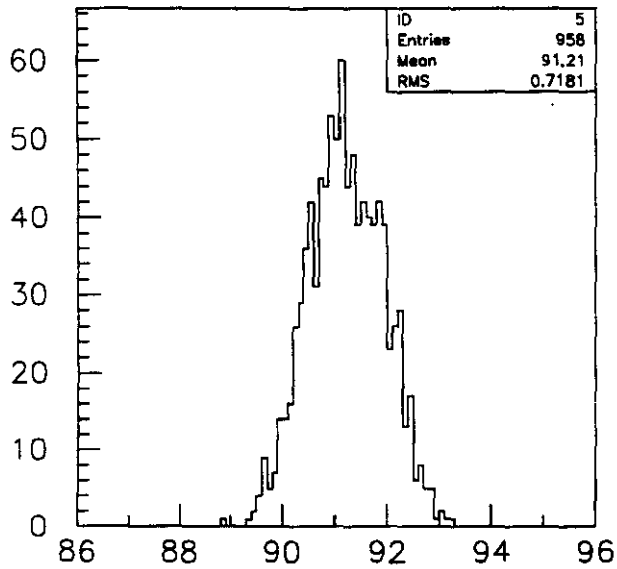

Z0 MASS Pt SMEARING

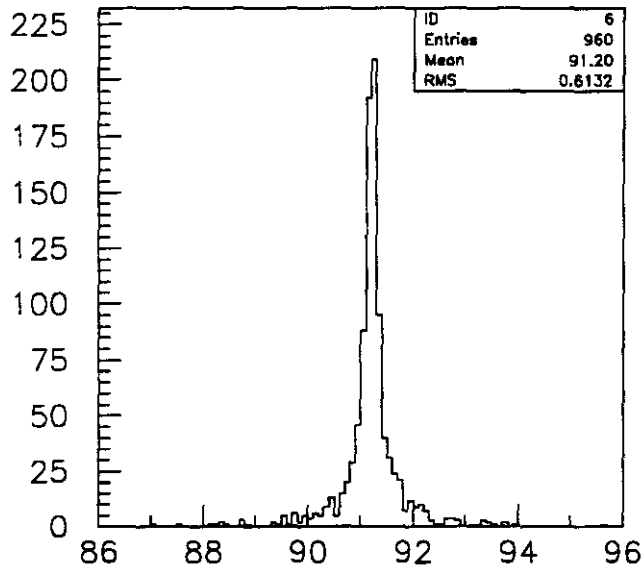

Z0 MASS THETA MULT. SCATT.

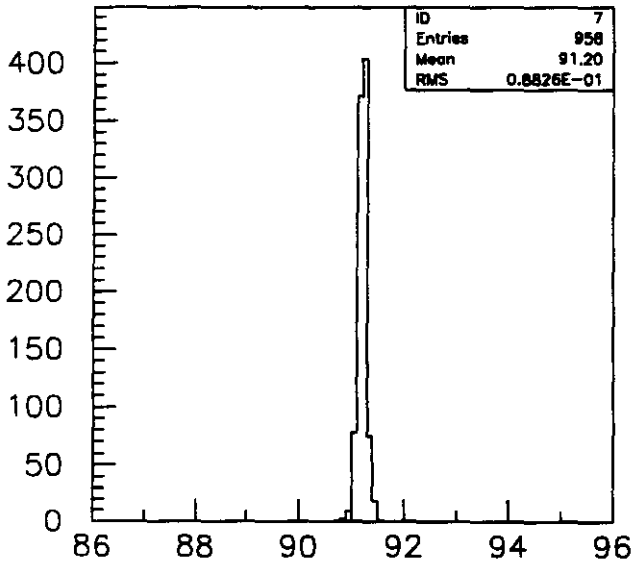

Z0 MASS PHI MULT. SCATT.

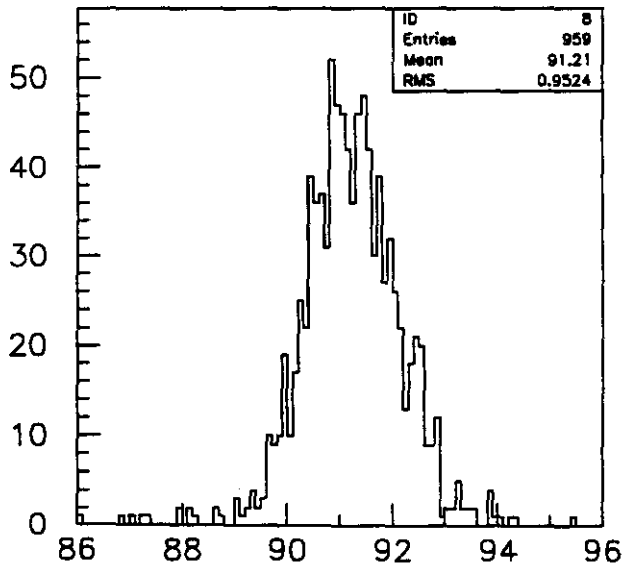

Z0 MASS ALL THREE FACTORS

$P_{Z_0} = 100\,GeV/c$

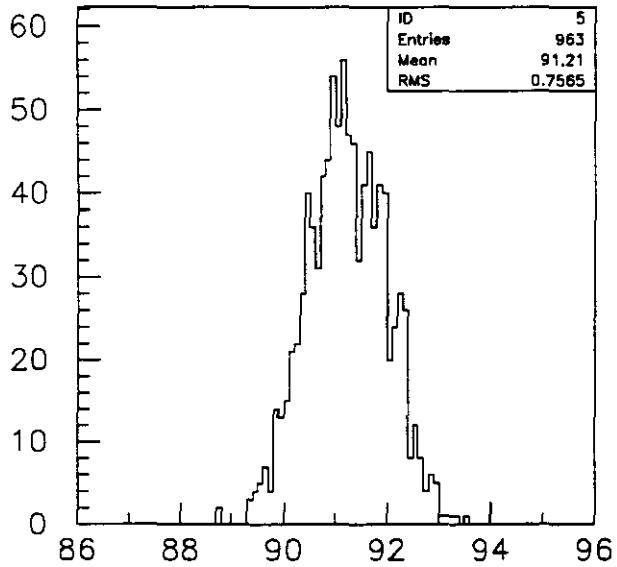

Z0 MASS Pt SMEARING

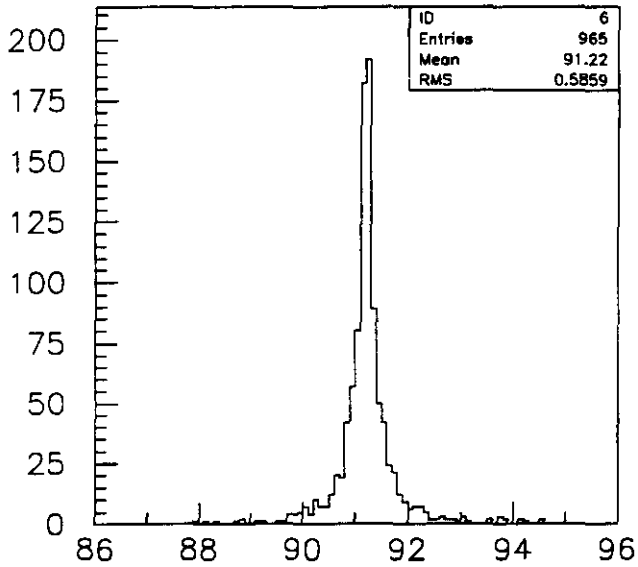

Z0 MASS THETA MULT. SCATT.

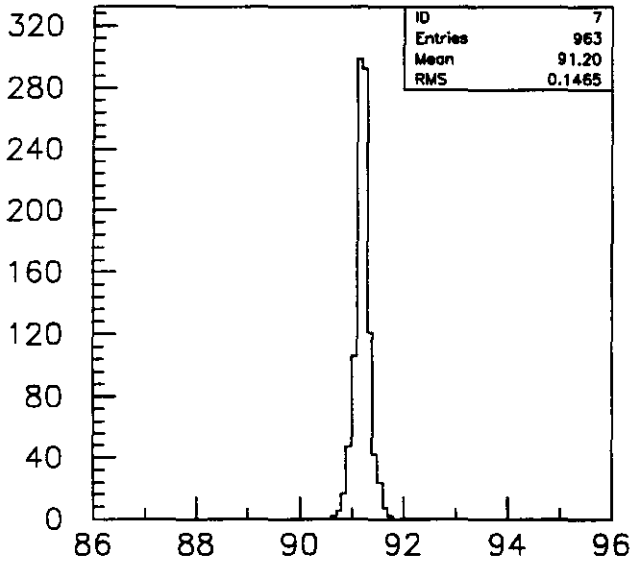

Z0 MASS PHI MULT. SCATT.

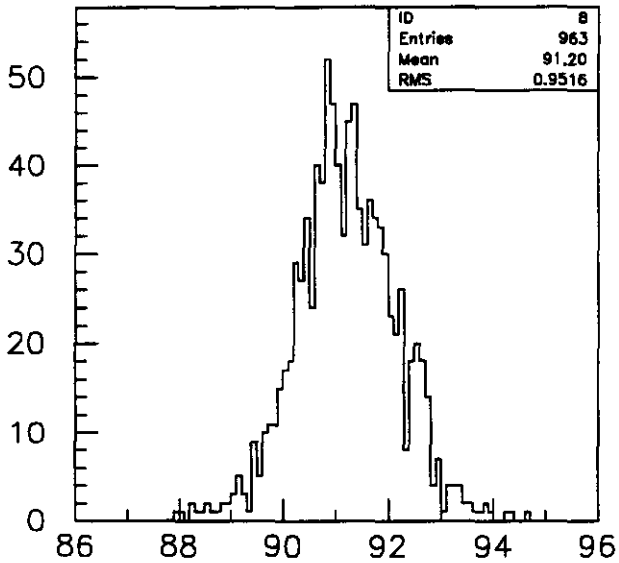

Z0 MASS ALL THREE FACTORS

$P_{Z_0} = 400 GeV/c$

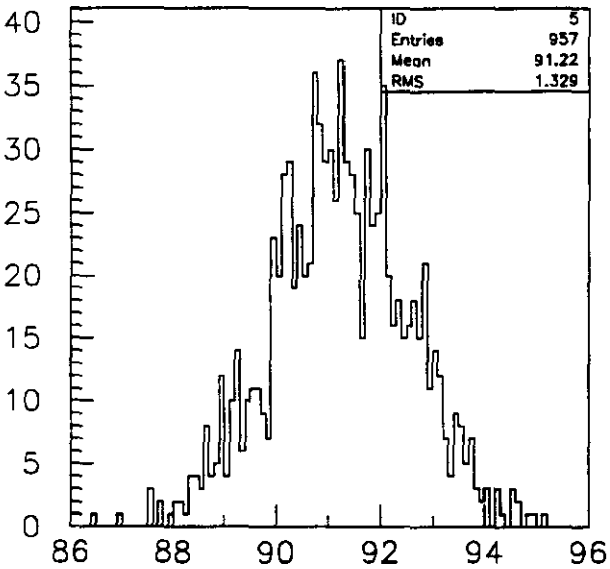

Z0 MASS Pt SMEARING

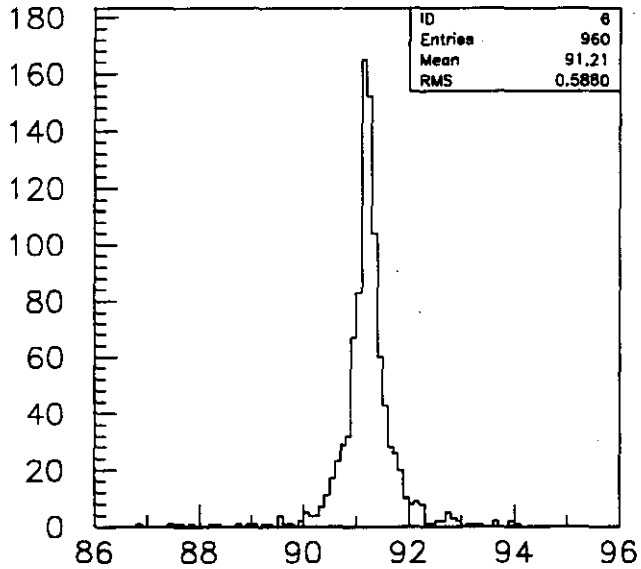

Z0 MASS THETA MULT. SCATT.

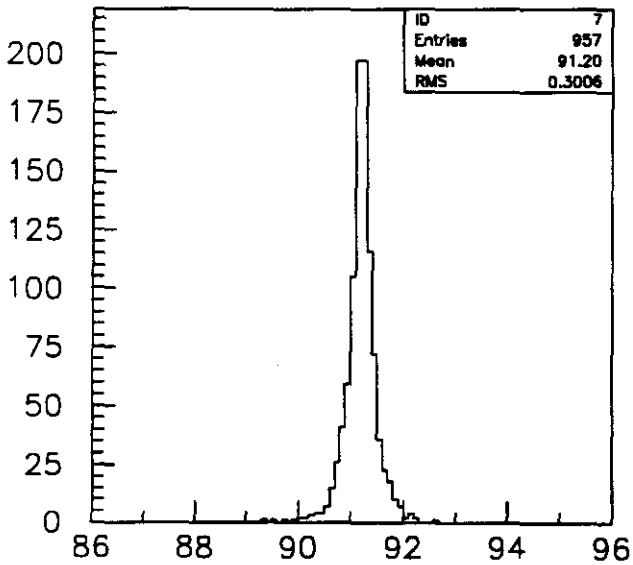

Z0 MASS PHI MULT. SCATT.

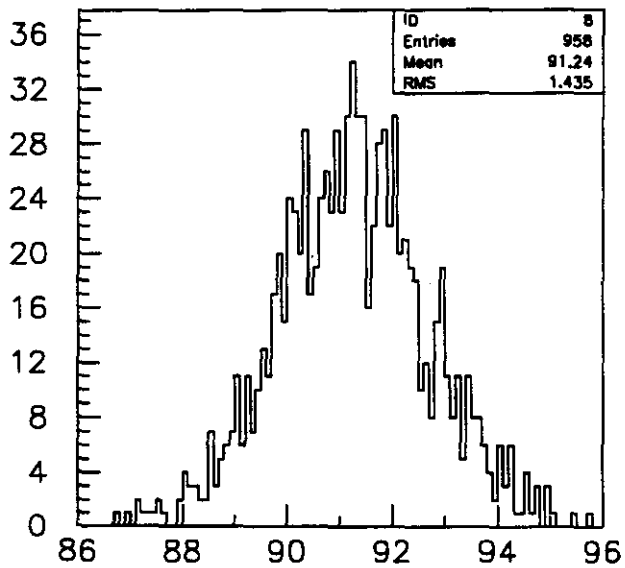

Z0 MASS ALL THREE FACTORS

$P_{Z^0} = 50\,GeV$

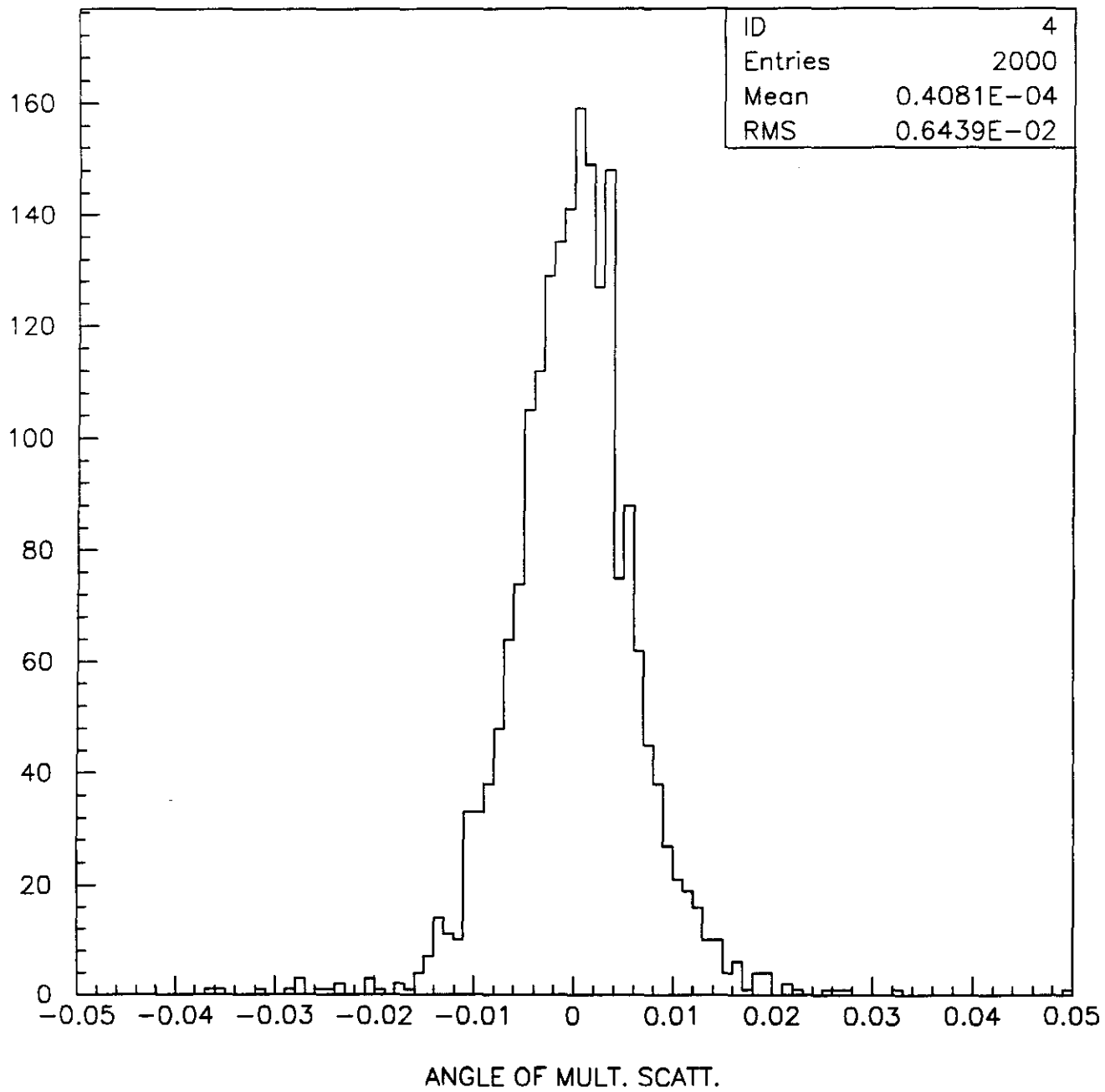
ID 4
Entries 2000
Mean 0.4081E−04
RMS 0.6439E−02
160
140
120
100
80
60
40
20
0
−0.05 −0.04 −0.03 −0.02 −0.01 0 0.01 0.02 0.03 0.04 0.05
ANGLE OF MULT. SCATT.

$P_{\pi^0} = 100 GeV/c$

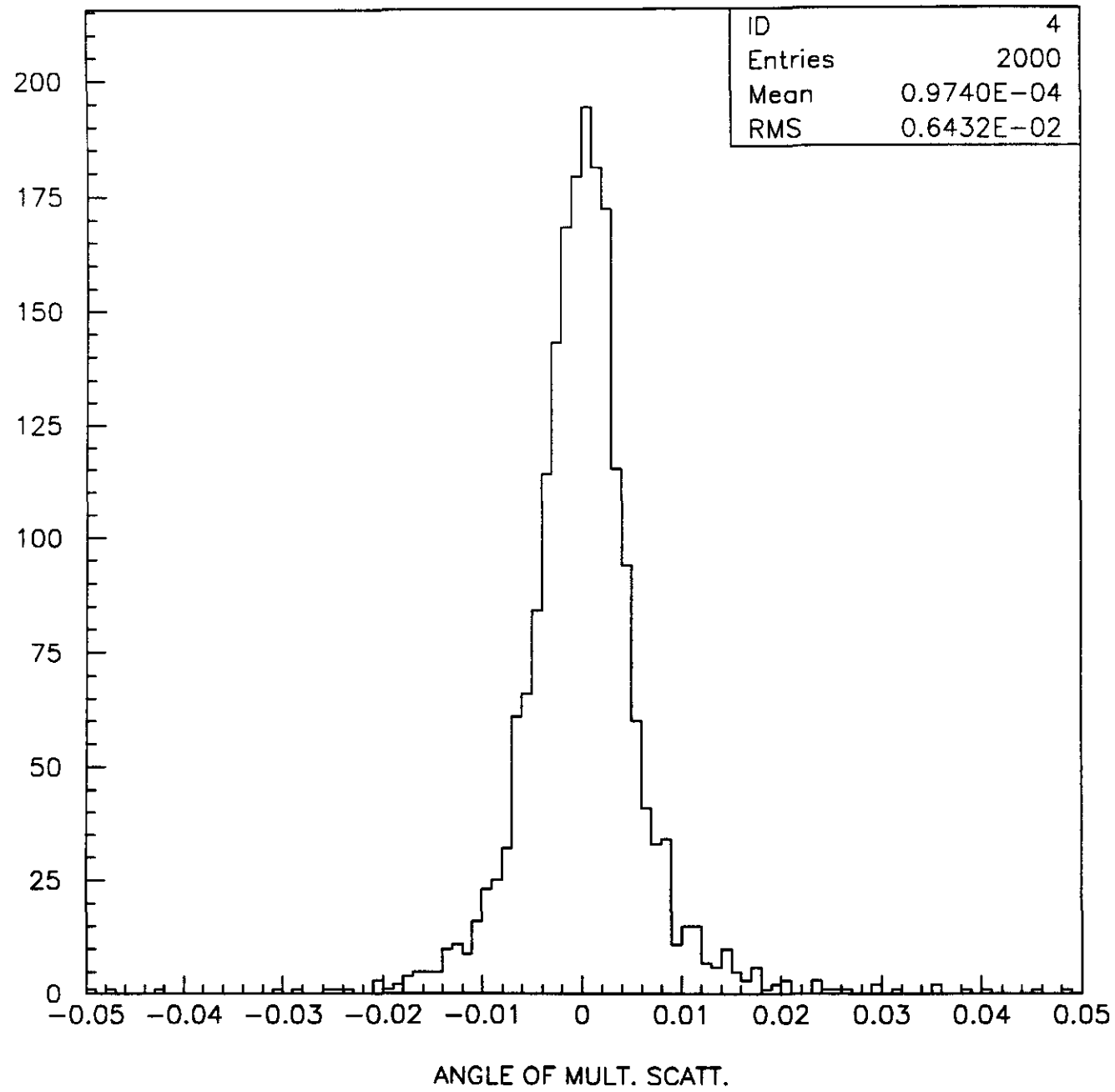

$P_{Z^0} = 400\ GeV/c$

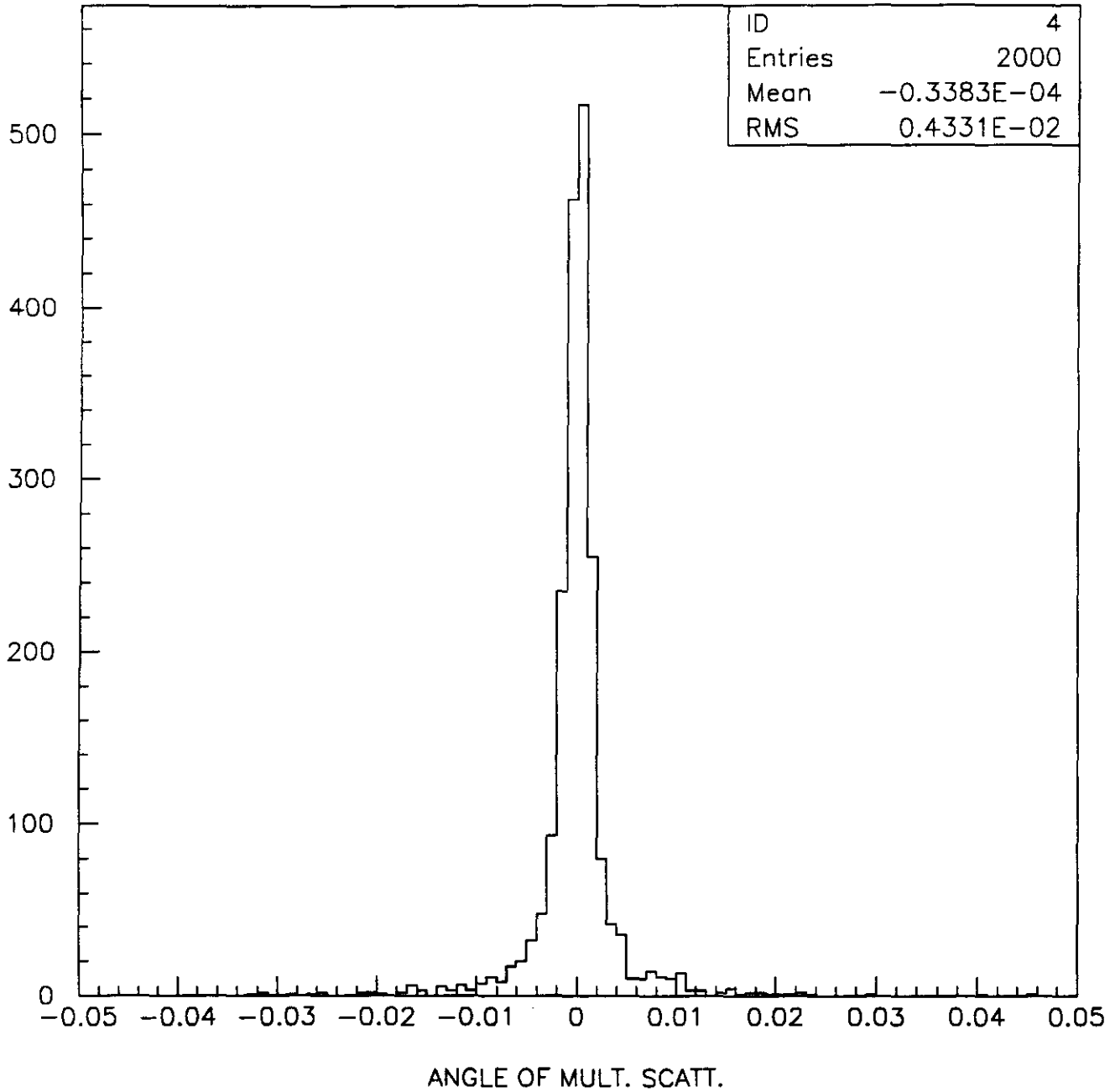
ID 4
Entries 2000
Mean −0.3383E−04
RMS 0.4331E−02
500
400
300
200
100
0
−0.05 −0.04 −0.03 −0.02 −0.01 0 0.01 0.02 0.03 0.04 0.05
ANGLE OF MULT. SCATT.

$P_{Z^0} = 100 GeV/c$

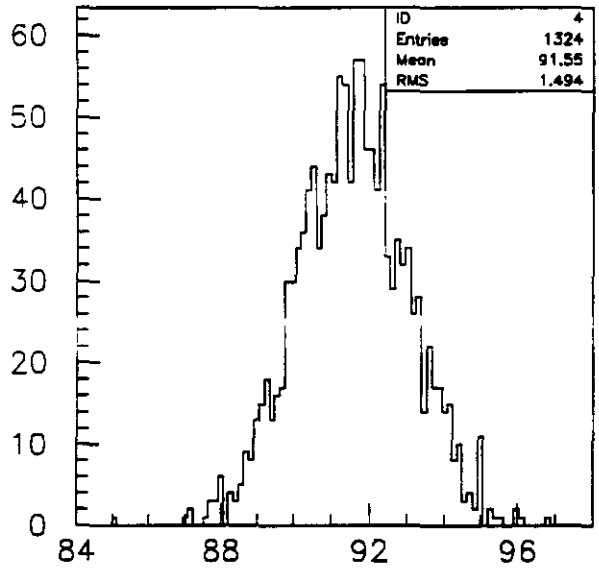

M Z0 DELTA THETA 2 MRAD

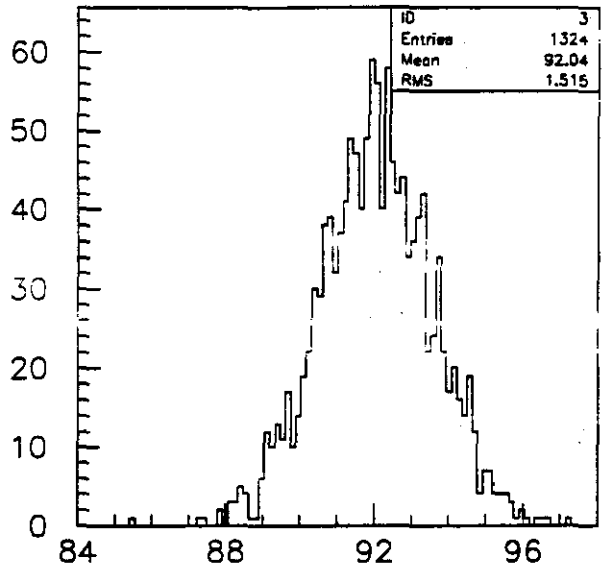

M Z0 DELTA THETA 5 MRAD

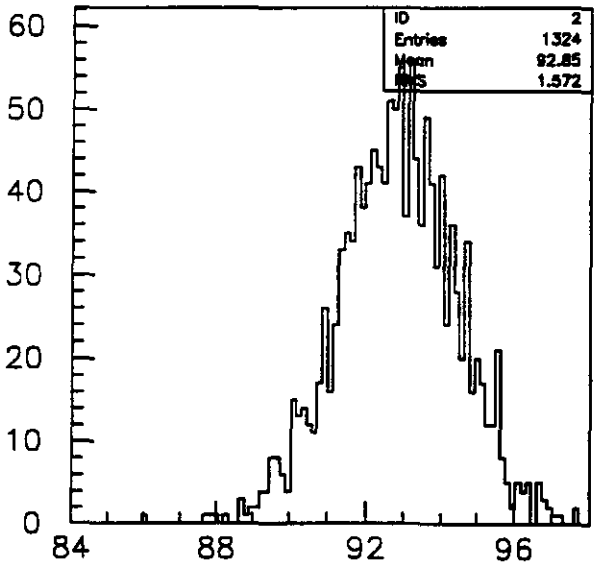

M Z0 DELTA THETA 10 MRAD

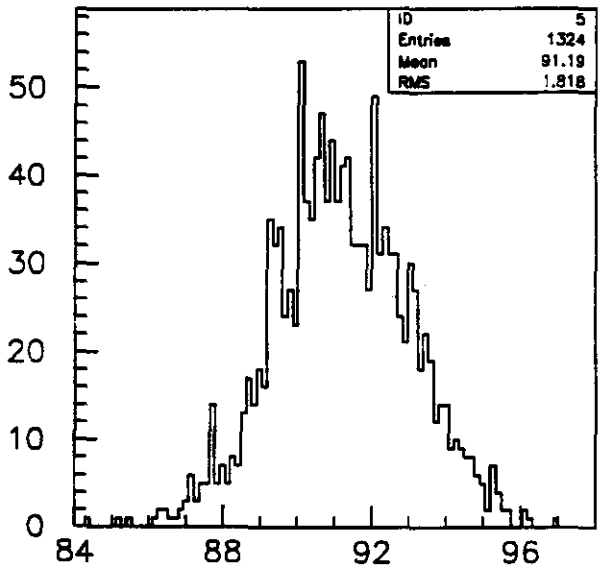

M Z0 DELTA PHI 10 MRAD

G. Mitselmakher

More on X-ray Alignment

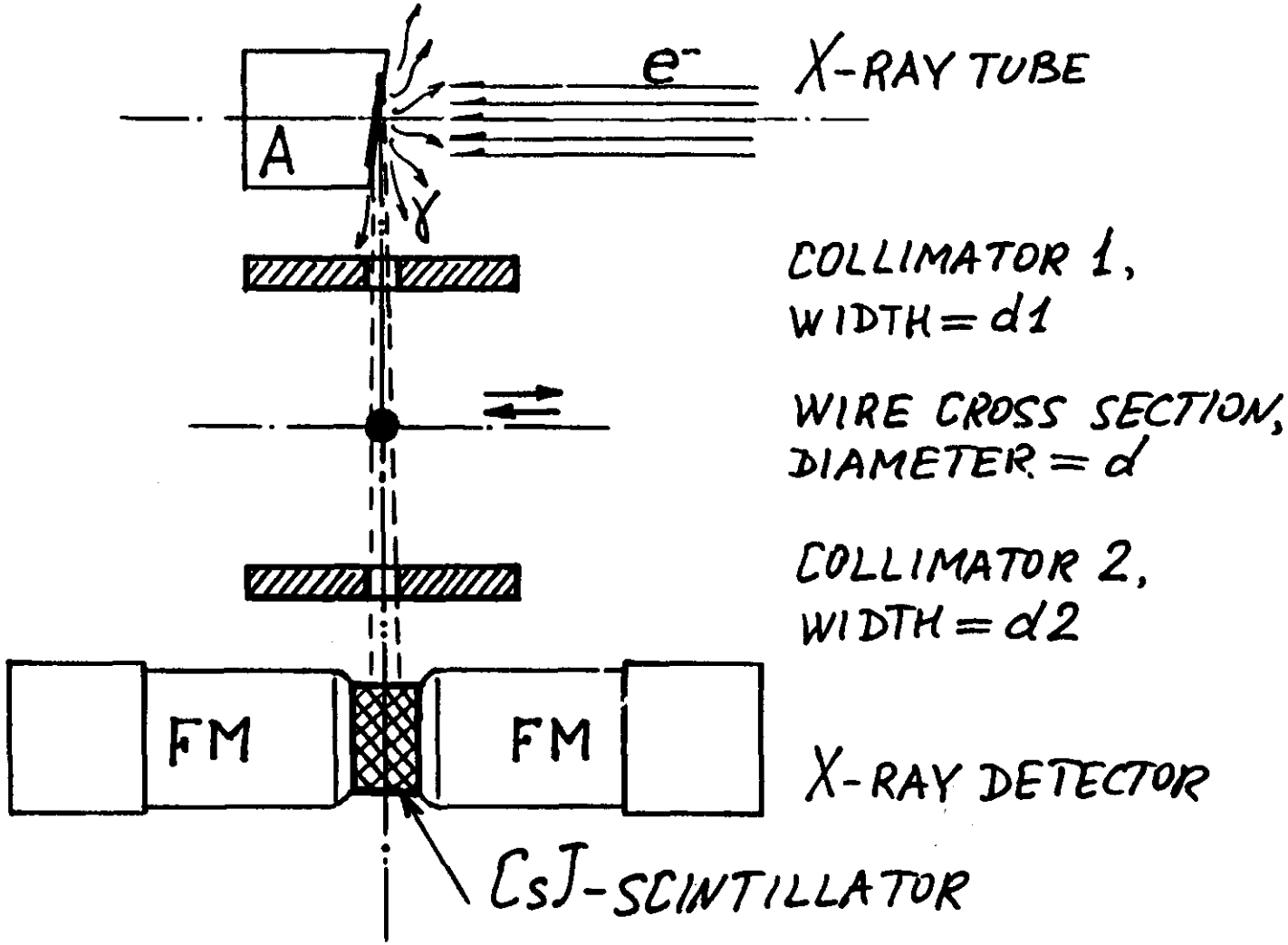

$d1 \simeq d2 \simeq d = 50 \div 80$ MICRONS

Fig. 1. Dubna, 1989

Dubna, 1989

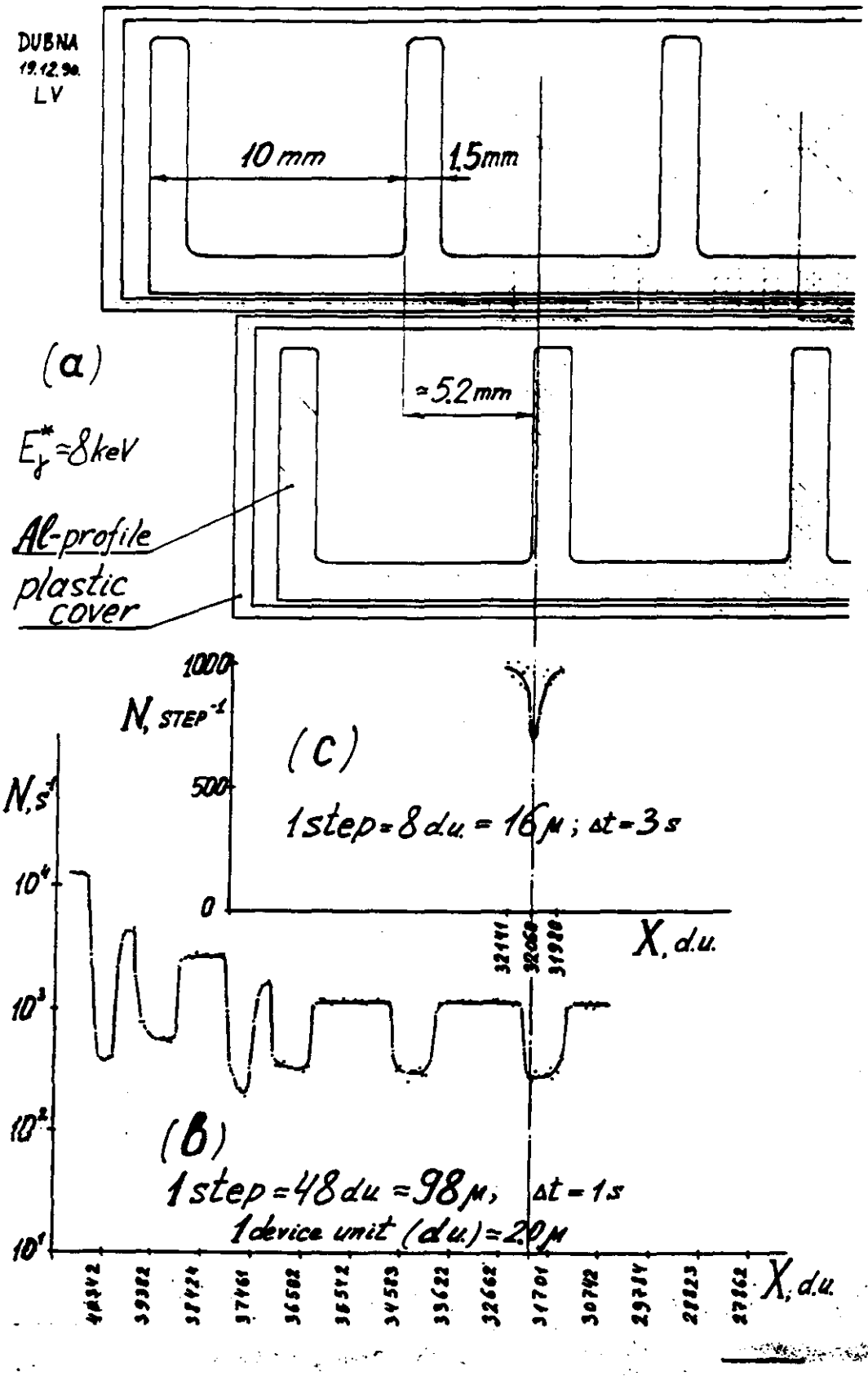
DUBNA
19.12.90.
LV
10 mm
1.5mm
(a)
≈5.2mm
$E_\gamma^* \approx 8$ keV
Al-profile
plastic cover
1000
N, STEP^{-1}
500
0
(c)
1step = 8 d.u. = 16 μ ; Δt = 3 s
X, d.u.
N, s^{-1}
10^4
10^3
10^2
10^1
(b)
1 step = 48 du = 98 μ, Δt = 1 s
1 device unit (d.u.) = 2.0 μ
X, d.u.

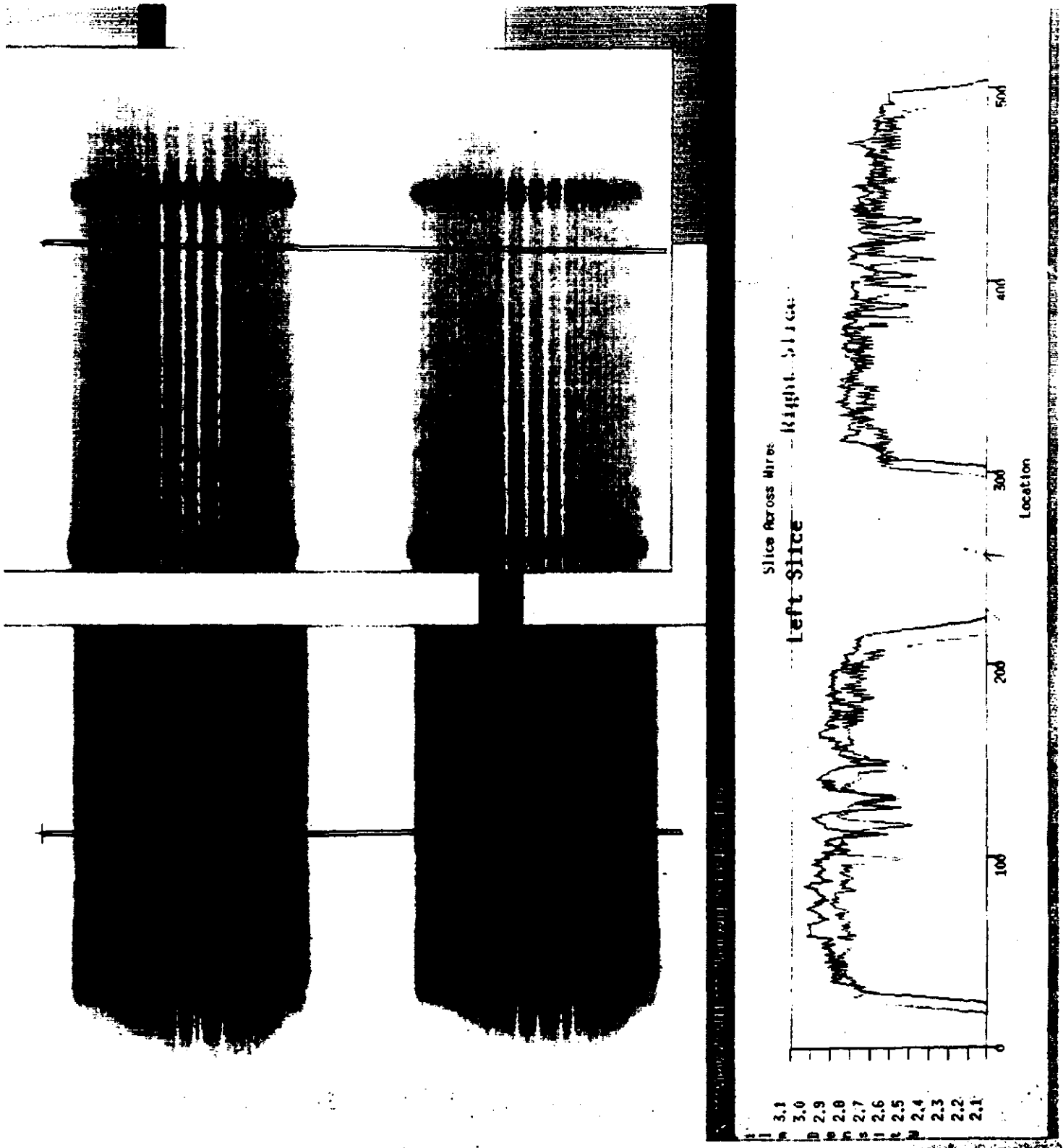
Slice Across Wires
Left Slice
Location
0
100
200
300
400
500
3.1
3.0
2.9
2.8
2.7
2.6
2.5
2.4
2.3
2.2
2.1