GEM-TN-92-222

DRAFT

GEM Magnet

SAFETY EVALUATION

October 29, 1992

DRAFT

Prepared by

Richard Guthrie PRD
Chad Price PRD

Approved by

Ronn Woolley
PRD ES&H Manager

Date

DRAFT

Table of Contents

TABLE OF CONTENTS iii

LIST OF TABLES iv

LIST OF FIGURES iv

1.0 INTRODUCTION 1

1.1 Purpose and Method of Safety Evaluation 1
1.2 Safety Assessment and Conclusion 2

2.0 SUPERCONDUCTING SOLENOID MAGNET 3

2.1 System Description 3
2.2 Major Structural Elements 3
2.2.1 Solenoid Magnets 3
2.2.2 Field Shapers 5
2.2.3 Detector Supports 5
2.3 Supporting Systems 5
2.3.1 Power/Protection System 5
2.3.2 Cryogen Supply Systems 7
2.3.3 External Vacuum System 7
2.3.4 Control Systems 7

3.0 SPECIFIC HAZARDS 11

3.1 Electrical Hazards 11
3.2 Structural Hazards 11
3.3 Magnet Hazards 11
3.4 Noise Hazards 11
3.5 Egress Hazards 11
3.6 Environment Hazards 11
3.7 Fire Hazards 11
3.8 Material Handling Hazards 12
3.9 Radiation Hazards 12
3.10 Oxygen Deficiency Hazards 12
3.11 Mechanical Hazards 12

4.0 POTENTIAL HAZARD MITIGATION 13

4.1 Design Safeguards for Minimum Risk 13
4.2 Electrical Design Safety 13
4.3 Mechanical Design Safety 14
4.4 Access Control and Hazardous Warning Devices 14
4.5 Fire Protection 14

DRAFT

Table of Contents (Continued)

4.6 Medical Certification for ODH 15
4.7 Safety Training 15

REFERENCES 16

APPENDIX A HAZARD ANALYSIS A-1
A.1 Methodology A-1
A.1.1 Purpose A-1
A.1.2 Conceptual Hazard Analysis Criteria and Guidelines A-1
A.1.3 DOE Design Safety Criteria for Risk Reduction A-2
A.1.4 Risk Assessment A-2
A.1.5 Responsibilities A-3
A.2 Hazard Data Worksheets A-4
A.3 GEM Magnet Hazard Summary A-4

APPENDIX B ACRONYMS B-1

List of Tables

Table A-1 GEM MAGNET Hazard Summary A-5

List of Figures

Figure 2-1 GEM Magnet Subsystems 4
Figure 2-2 Cold Mass Supports 6
Figure 2-3 GEM Magnet Nitrogen Flow Schematic 8
Figure 2-4 GEM Magnet Helium Flow Schematic 9
Figure 2-5 Control System Block Diagram 10
Figure A-1 Risk Assessment Matrix A-3
Figure A-2 Severity of Consequences A-4

DRAFT

1.0 Introduction

The Superconducting Super Collider Laboratory (SSCL) is a high energy physics research laboratory operated by the Universities Research Association (URA) under contract from the Department of Energy (DOE). The GEM (Gamma, Electron, Muon) Collaboration has established a design for the GEM Magnet. Details of the design and rationale for selection of various aspects are given in GEM TN-92-110, GEM Magnet Technical Design Report.

This document presents a Safety Evaluation (SE) for the GEM Magnet. The GEM Magnet will located at the experimental hall of IR 5.

1.1 Purpose and Method of Safety Evaluation

From the outset, basic design concepts and design reviews of the GEM Magnet have included safety considerations and safeguards for personnel, the environment, property, and equipment. The purpose of this SE is to document the identified potential hazards and present the methods used to prevent or control hazards to the degree necessary to operate and maintain the GEM Magnet in a safe manner. One principal goal of the SE is to assure, by its review, that all environmental protection, safety, and health matters have been identified and, even more important, have been adequately addressed in the design and future operation of the GEM Magnet.

An SE presents a basic safety analysis of potential hazards associated with systems and operations. Their mitigation and control actions and requirements are also documented. Some 22 potential hazards have been classified and analyzed by the laboratory team. For convenience, the primary hazards in the hazard analysis have been divided into three categories - electrical, general, and mechanical.

Documentation of potential hazards and risks was provided by those engineers responsible for the systems and equipment. This method served as a primary means for hazard identification and influenced the different measures taken to mitigate or control the potential hazards through the design and installation phases. Since the design is at a relative early stage, the identification of hazards was focused at the system level of detail.

The provision of safe working conditions for employees and prevention of damage or loss to Laboratory property is of paramount importance to the SSCL, DOE, and the public.

The following report sections include: (2.0) an overview of the GEM Magnet, its subsystems and principal structure; (3.0) a discussion of specific hazards; and (4.0) an explanation of proposed mitigation methods for those hazards which can be controlled. A summary of each hazard is enclosed in Appendix A. Appendix B contains abbreviations and acronyms of safety related terms.

DRAFT

1.2 Safety Assessment and Conclusion

This report describes the objectives, physical layout, and specific function of the GEM Magnet. It is the primary safety evaluation and assessment document for this system. The GEM Magnet is found to be a low risk system (as defined in DOE 5481.1B, Chapter II, paragraph 5) at the system level of this evaluation. It is concluded that the GEM Magnet is safe as designed and is safe to operate as planned.

As the GEM Magnet design becomes more established, the emphasis of this evaluation will also become more specific and detailed. It is anticipated that there will be several iterations of the safety evaluation process to reflect the design process through the construction and operating phases.

Extensive safety review of the design and operation is demonstrated by the hazard analysis included in the body of this evaluation and in Appendix A. Safety is an inherent part of the equipment design process and operational planning review. Risks have been minimized to an acceptable level by design safety features, development of operational safety procedures, development of supplemental emergency procedures, and planned training and administrative controls.

DRAFT

2.0 SUPERCONDUCTING SOLENOID MAGNET

The GEM magnet will provide the 0.8 T solenoidal magnetic field within which all of the other detector subsystems will operate. The field is uniform throughout the bore of the magnet, a cylinder 18.2 m in diameter and 30 m long. The direction of the magnetic field is parallel with the local SSC beam axis. Figure 2-1 shows the major subsystems that comprise the magnet. A detailed description of the magnet is found in GEM-TN-92-116, Magnet Technical Design Report, dated July 2, 1992.

2.1 System Description

The magnet subsystem is composed of five major structural elements and five supporting systems; the major structural elements are:

- two solenoid magnets
- a central detector support
- two forward field shapers

The supporting systems include:

- Control systems
- Power and protection systems
- Liquid nitrogen supply
- Liquid helium supply
- External vacuum system

2.2 Major Structural Elements

2.2.1 Solenoid Magnets

The coil assemblies consist of superconducting windings contained in large annular vacuum vessels and the hardware required to enclose and physically support them. The two independent solenoid magnets are separated near the centerline of the detector by the central detector support structure. Each coil assembly is approximately 21.6 m dia. x 15 m long, weighing approximately 1500 tons.

The coil assemblies are supported by conventional saddles, which in turn are supported from specific locations on the floor of the hall. Each coil assembly will be individually movable in the "z" direction during long accelerator shutdowns, to provide access inside the detector. This movement is accomplished on rollers or fluid bearings that are installed under the vessel supports.
In operation, the coil assemblies experience a force of 50-60 MN, compressing the two halves toward each other. At the midplane, they bear against each other via compression posts which penetrate the central detector support, but are not connected to it.

Each coil assembly is composed of six elements; cold mass, the thermal radiation shields, the vacuum vessels, the cold mass supports, the internal cryogen piping, and the vapor-cooled current leads.

Each cold mass is composed insulated, aluminum sheathed, cable-in-conduit superconductor, wound in 1.2 km sections inside a support cylinder called a bobbin. The completed cold mass is composed of 12 coil segments that are individually wound and joined into an assembly. The weight of each cold mass is 525 t.

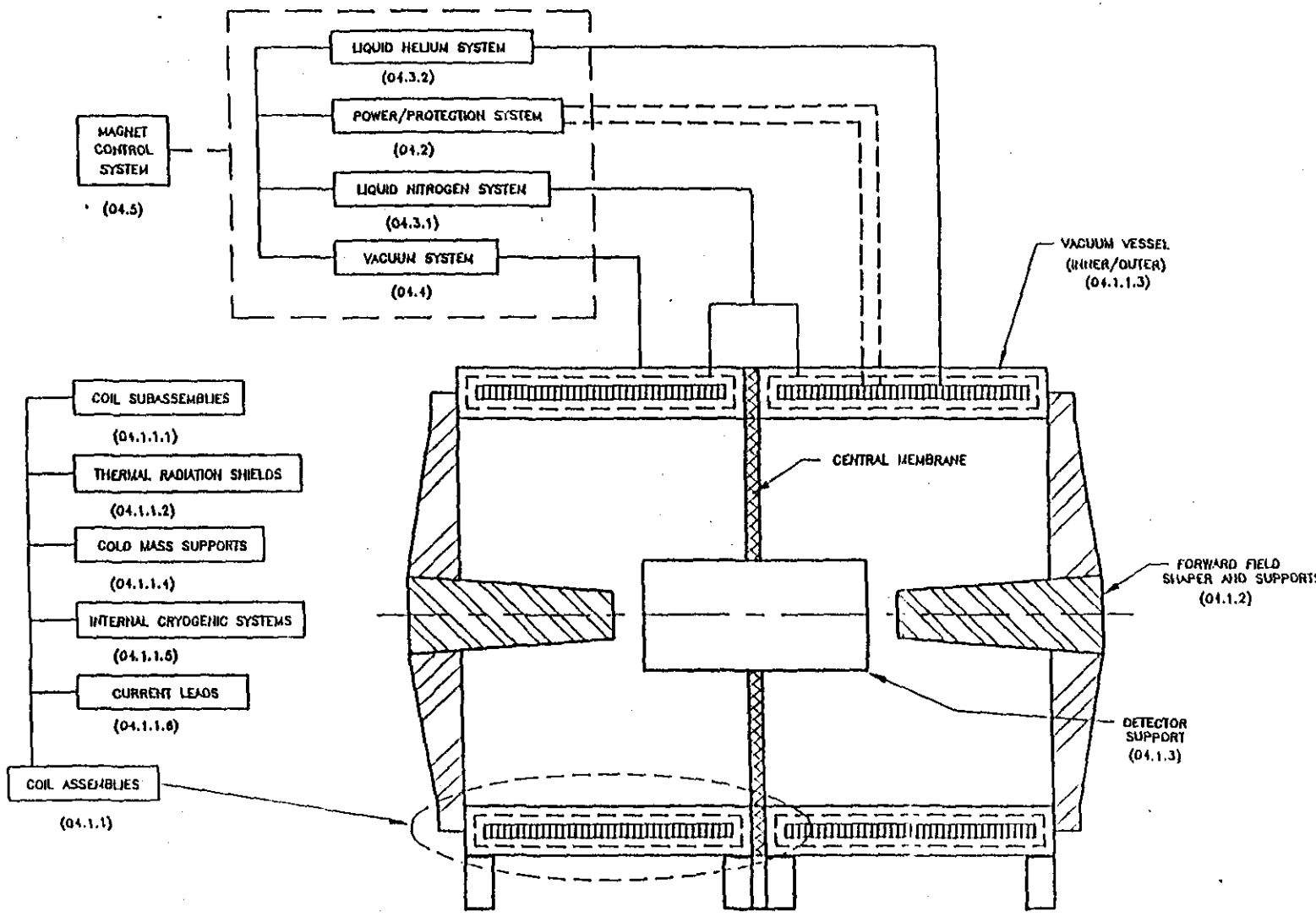

Figure 2-1 GEM Magnet Subsystems

DRAFT

DRAFT

Thermal radiation shields are made up of longitudinal segments that when installed form of two concentric liquid nitrogen cooled cylinders. These act as radiation barriers between the 300 K inner and outer vacuum vessel walls and the 4 K magnet coil.

Each of the two vacuum vessels provide vacuum thermal isolation for the coil subassemblies, as well as structural support for the coils and thermal shields. The vacuum vessels also provide physical support for the muon detector subsystem. Each of the two vessels is annular, consisting of an inner vessel, an outer vessel, and two end rings. The inner vessel is a simple cylinder, 2.5 cm thick, and weighs approximately 170 t. The outer vessel 5 cm thick with reinforcing ribs. To support the axial magnetic forces, eight longitudinal T-section beams are included. The total weight of the outer vessel plus stiffening rings and beams is approximately 700 t. The end rings also serve as the mounting location for the muon subsystem.

The vacuum vessels are supported by relatively conventional 120° saddles at two locations. Since the two vessels must translate to provide access inside the detector, the two saddles on each vessel are linked together axially to provide the required restraint. Each vessel is moved on rollers or grease pads; two tracks are provided on the floor for this purpose.

The cold mass supports (Figure 2-2) secure the cold mass assembly to the vacuum vessel. They are designed to support the weight of the cold mass (525 t per coil half), withstand the axial magnetic body force on the conductor, and allow for movement of the cold mass due to thermal contraction of the magnet. The cold mass will shrink approx. 6 cm in the radial dimension and 5 cm axially.

Two pairs of current leads are required for the two coil halves. The current leads are rated at 50 kilo-amps and are vapor cooled .

2.2.2 Field Shapers

There is one field shaper in each magnet half. Each field shaper consists of 1000 t of ferromagnetic steel with a conical outer envelope having an included angle of about 17° and truncated at each end. The nominal length of the flux concentrator is 9.5 m, and the inner end is located axially at z=8.5 m. The ID of the flux concentrator is about 20 cm to accommodate the beam tube which runs through it concentrically.

The support for each flux concentrator is a welded fabrication. The structure is bolted to the vacuum vessel at the OD and to the flux concentrator at the ID. The weight of each support structure is about 650 t. The support is ultimately mounted to a support frame and installed on a roller and track system in the assembly hall.

2.2.3 Detector Supports

The detector support in the center of the assembly hold the 2000 t central detector in position. It is a free standing welded structure that does not move form its fixed position at the center of the detector. The weight of the support structure is about 650 t.

2.3 Supporting Systems

2.3.1 Power/Protection System

This system provides the electrical current for the magnet, as well as protection systems to discharge the magnet in the unlikely event of a quench. This equipment (with the exception

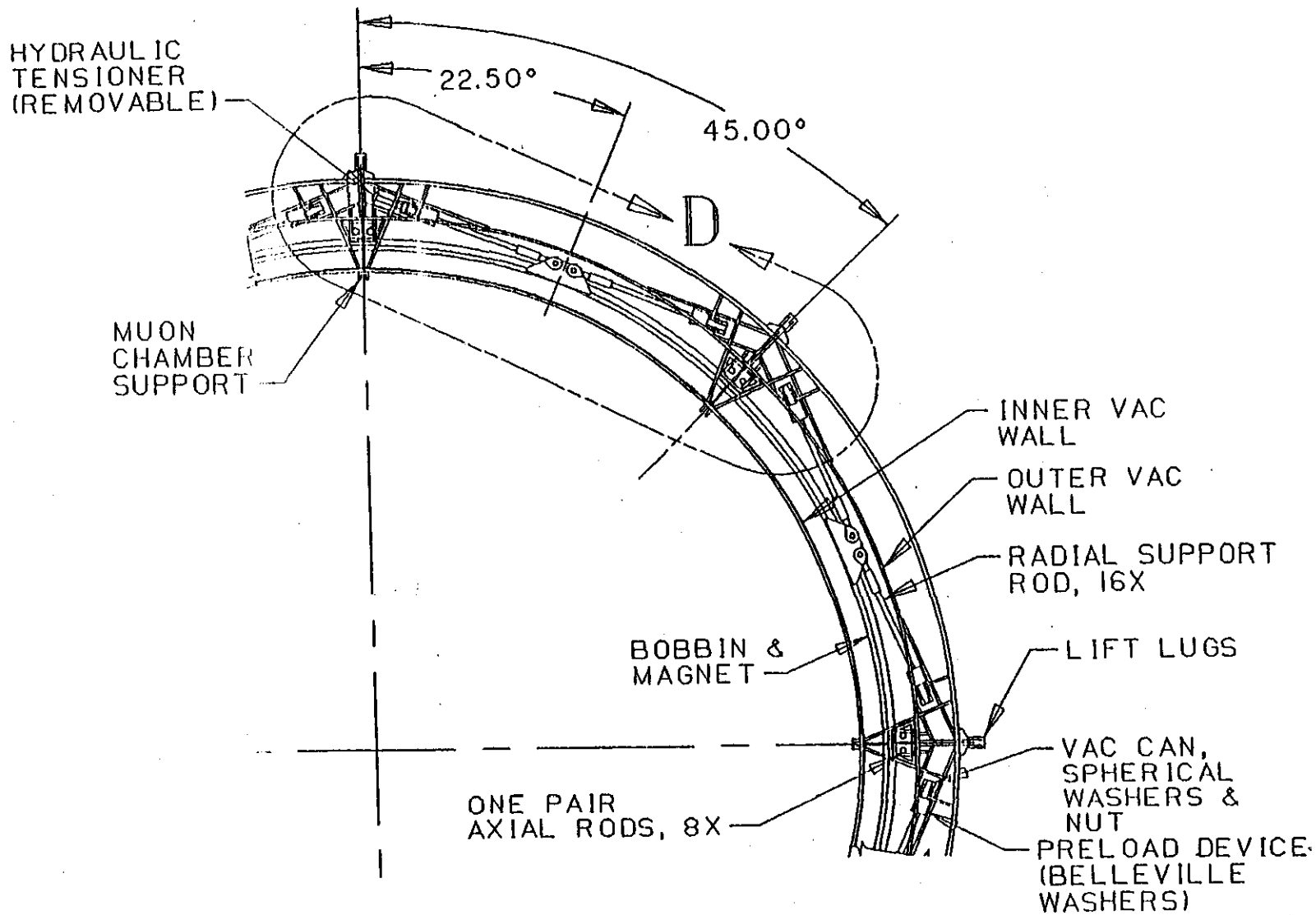

Figure 2-2 Cold Mass Supports

DRAFT

of the warm current busses) is located above-ground, in the utility building. The power/protection system is required to charge the magnet to full current in 8-10 hours. Normal discharge time will also be 8-10 hours, after which the magnet can be immediately re-charged, if desired. In an emergency situation, the magnet can be discharged in 5 min., using a dump resistor, but this rapid discharge results in warming of the cold mass, which delays the possibility of restart until it can be re-cooled.

The power supply connects directly to the site 4160 V 3-phase power line, and provides 52.5 kA DC current at a maximum of 20 V. It is connected to the cryogenic current leads on the magnet by a set of water-cooled, aluminum buss bars. The estimated length of the buss, from power supply to magnet and back, is 280 m. The buss is water-cooled (to reduce the heat load to the hall HVAC), cooling is required even in the event of loss of site power. The warm busses connect to the two coil halves separately, and the local connections are demountable, to provide for moving the magnet halves for internal access.

In the event of an emergency discharge, the current is switched through a dump resistor. The DC breakers and dump resistor are located adjacent to the power supply in the utility building. The breaker may be either a solid-state or a mechanical device and its function is to quickly interrupt the 50 kA current. The dump resistor is required to have the capacity to absorb the stored energy of the magnet, approximately 2.5 GJ. The dump resistor consists of a large number of parallel conductors, submerged in a tank of water. The dump resistor is positioned below the warm busses, adjacent to the breaker and power supply. It connects directly to the warm buss.

2.3.2 Cryogen Supply systems

The cryogenic system consists of a dewar-supplied LN2 system and a 4.0 kW LHe refrigeration system. The LN2 system (Figure 2-3) is supplied by a 160,000 liter storage dewar which is located above ground in or near the cryogenics building. Approx. 60 m of 50 mm diameter vacuum insulated aluminum piping is used to transfer the LN2 from the storage dewar to the feed bayonets on the vacuum vessel. A small amount of LN2 is used in the LHe refrigerator for heat exchanging with the gaseous helium return gas.

The LHe refrigeration system (Figure 2-4) consists of a 4.0 kW refrigerator that feeds a 60,000 liter storage dewar located in the cryogenics building adjacent to the LHe refrigerator. Stainless steel vacuum insulated piping is used to transfer the LHe from the cryogenics building to the vacuum vessel. LHe used to stabilize the superconductor is fed from the pressurized supply side of the LHe refrigerator through a subcooler located inside of the 60,000 liter dewar to the conductor. Boil-off from this circuit is returned to the local dewar for recirculation.

2.3.3 External Vacuum System

The magnet vacuum system is required for evacuation of the magnet vessels, prior to cooldown, and for maintaining the vacuum during operation. The cold mass and the thermal shields will provide excellent (cryo)pumping capability for everything except helium, once they are cooled. The vacuum system for each vessel consists of diffusion dumps, backed by a roots blowers mechanical pumps. The mechanical pumps are assumed to be above-ground.

2.3.4 Control Systems

Control of the magnet and operator interface is handled by the GEM "slow control" system. The magnet subsystem will contain local programmable controllers, to handle the

DRAFT

lowest-level control functions. (Figure 2-5) Also, local electronics for quench detection/diagnostic functions will be required. Controls are required for the power/protection system, the cryogenics system, and the vacuum system.

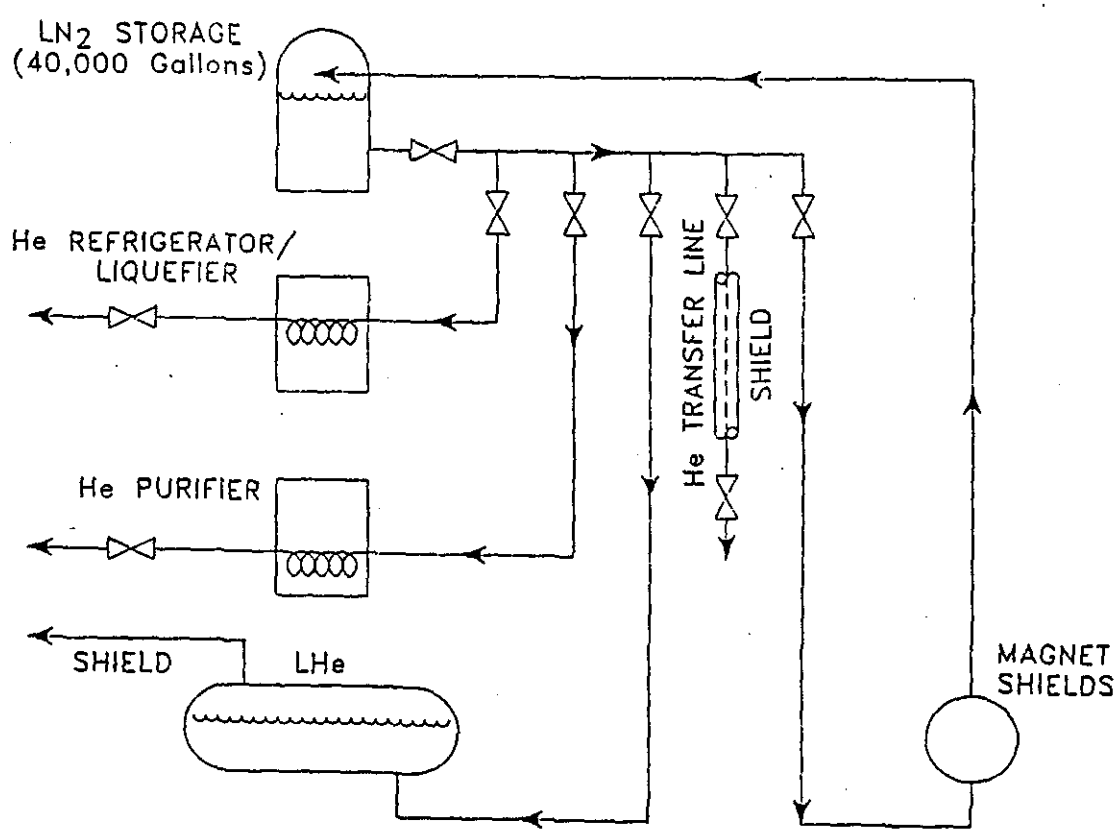

Figure 2-3 GEM Magnet Nitrogen Flow Schematic

DRAFT

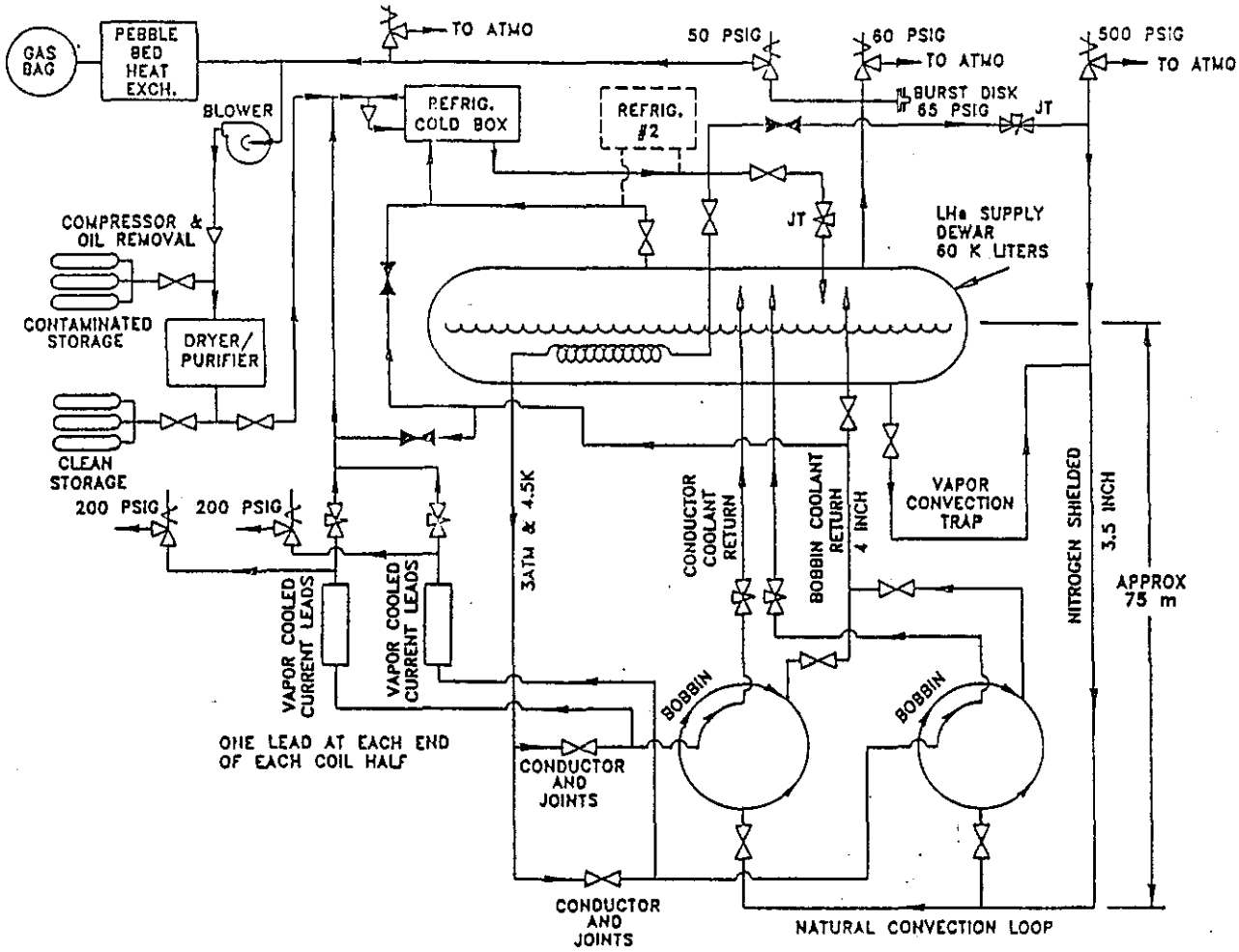

Figure 2-4 GEM Magnet Helium Flow Schematic

DRAFT

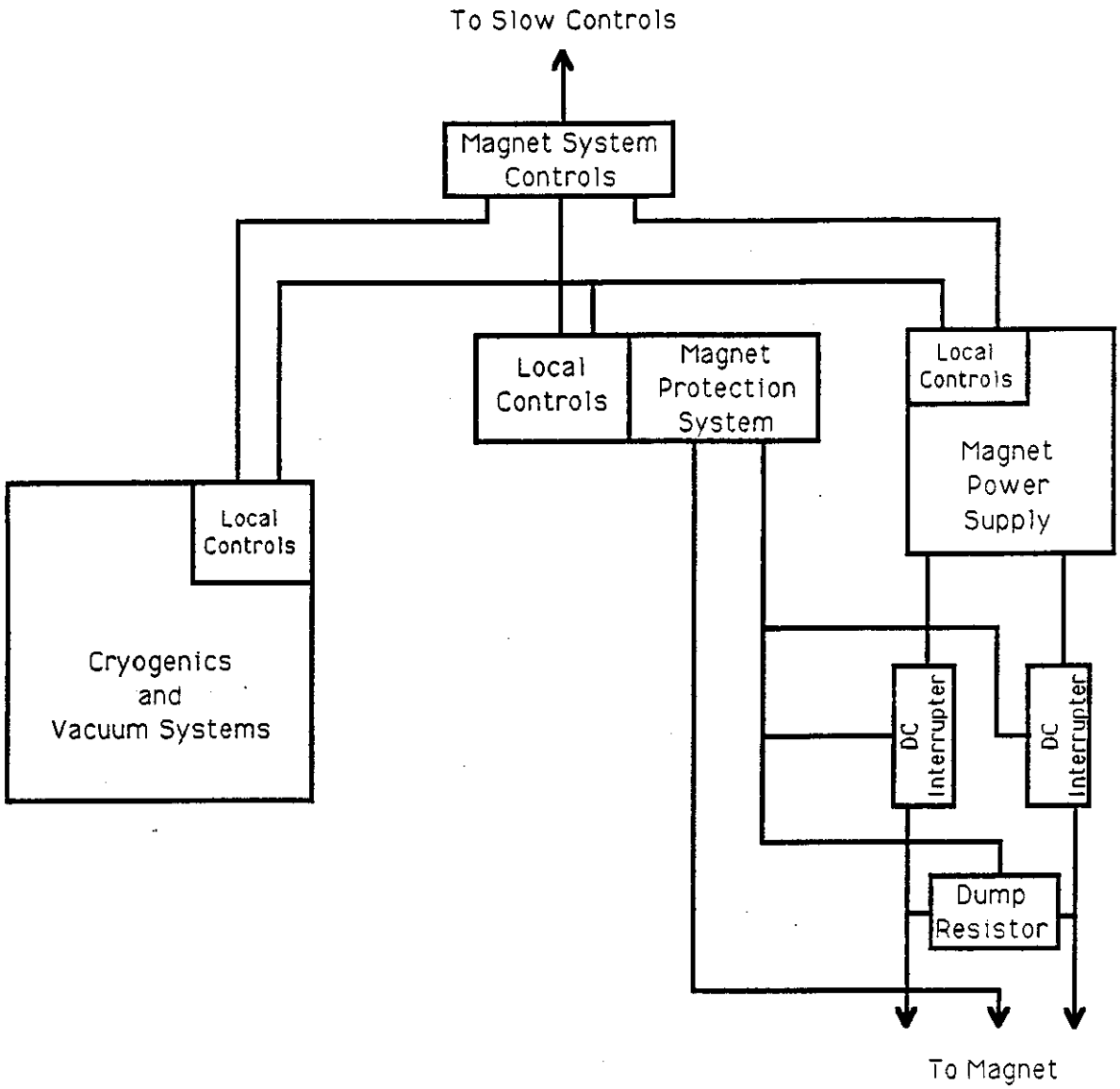

Figure 2-5 Control System Block Diagram

DRAFT

3.0 Specific Hazards

3.1 Electric Hazards

Potential electrical hazards are encountered in the power supplies, power switch, and associated data acquisition modules. The primary potential hazard associated with this equipment is electrical shock at high voltage, or burn (i. e. arcing), and the possibility for overload, equipment damage, and fire. The GEM Magnet shall comply with the requirements of the National Electric Code.

3.2 Structural Hazards

The GEM Magnet is an integral part of the structural support for the GEM Detector. There are inherent hazards associated with providing structural support for the size and weight of the various detector components.

3.3 Magnet Hazards

Magnetic field strength falls within the assessment envelope of the SSC Final and Supplemental Environmental Impact Statements (Reference GEM-TN-92-190, Supplemental Environmental Analysis of the GEM Magnet) Pacemaker Warnings shall be posted as required. Personnel shall not be permitted near the magnet during operation.

3.4 Noise Hazards

There are no significant noise hazards is anticipated with the GEM Magnet.

3.5 Egress Hazards

The egress related hazards shall be addressed at the GEM Detector or experimental hall level. It is outside the scope of the safety evaluation for the magnet. The facility and egress scheme shall meet NFPA 101 Life Safety Code.

3.6 Environment Hazards

The GEM Magnet is not anticipated to be releasing any EPA controlled gases. Any chemicals or toxic substances used during maintenance will be strictly monitored, handled, and tracked. All GEM Magnet aspects shall be in accordance with applicable environmental local, state, and federal regulations, and laboratory environmental policy. The GEM Magnet shall comply with the requirements of EPA and NFPA. It is SSC Laboratory policy to prevent, eliminate and control any environmental hazards.

3.7 Fire Hazards

The GEM Magnet does not use any flammable gases. The only anticipated fire loading will be in the electrical cabling.

DRAFT

Fire protection and suppression equipment will be determined by the needs and requirements of the entire GEM Detector and the experimental hall.

The GEM Magnet shall comply with the requirements of the Life Safety Code, National Fire Codes and the National Electric Code.

3.8 Materials Handling Hazards

Potential for materials handling hazards is greater during maintenance and installation activities than during the operational testing. OSHA regulations for material handling will be followed. Equipment damage and personnel hazards unique to GEM Magnet are those material handling activities related to lowering the components into place. GEM Magnet personnel receive the greatest exposure to these potential hazards during equipment installation. Special considerations will be given to movement, installation and removal of the test components.

Crane operators will be qualified through SSCL approved gantry training. Pre-lift inspections and planning shall be required before any lift operation is performed.

3.9 Radiation Hazards

Radiation hazards shall be addressed at the GEM Detector and experimental hall level. Procedures and equipment for work in any radiated GEM area shall comply with SSC Laboratory policies and procedures.

Radiation badges and dosimeters shall be issued and worn by all personnel working in any radiated area.

3.10 Oxygen Deficiency Hazards

An Oxygen Deficiency Hazard (ODH) analysis shall been performed for the entire detector when the design becomes finalized.

An ODH rating of zero is anticipated for the detector during normal maintenance actions. A different rating or procedure may be found during filling and emptying cycles of the various GEM Detector cryogens.

ODH monitors and alarms shall be located as required. If needed, staff will undergo ODH medical screening and training. Personnel handling cryogens shall take a mandatory cryogen handling course.

3.11 Mechanical Hazards

The energy source of the vacuum chamber for the GEM Magnet presents a potential mechanical hazard. The magnet will be design to the ASME Boiler and Pressure Vessel code but will not be code-stamped. A finite element analysis shall verify adequacy of vacuum vessel design.

DRAFT

4.0 Potential Hazard Mitigation

The best hazard mitigation is safe system design. Design analyses are an important element in the identification and prevention of potential hazards. This SE identifies potential hazards, and it describes actions taken to reduce or mitigate those hazards which can be controlled through the system design, operation, and maintenance.

During the planning process the basic philosophy is:

* Design to minimize probable risk
* Provide warning devices
* Develop safety procedures and safety training
* Provide protective equipment.

4.1 Design Safeguards for Minimum Risk

During the GEM Magnet conceptual design phase, safeguards are being incorporated to control hazards. The design philosophy is that, if a potential hazard cannot be prevented or an identified hazard cannot be eliminated, then reduce the associated risk to an acceptable level as defined by DOE. The GEM Magnet design follows applicable DOE and SSCL orders, codes, engineering standards, and safety design criteria.

Application of SSCL approved Engineering Standards and Guidelines is one factor contributing to safe designs. Reliability and safety requirements also influenced the design. Design standards, such as NEC, ASME, and ANSI are being prudently employed, along with OSHA and EPA rules, to ensure that systems are designed and constructed with inherent safety. This includes the control of hazardous energy as required by OSHA Standard CFR 1990.147 for any source of significant stored energy: electrical, mechanical, hydraulic, pneumatic, chemical or thermal. Important design considerations are documented below for three areas: electrical, cryogenic, and mechanical.

4.2 Electrical Design Safety

The control and instrumentation systems comply with DOE/EV-0051/1, Electrical Safety Criteria for Research and Development Activities, Exhibit E Instrumentation and Control Systems. Equipment and personnel safety was improved by the following design actions:

*Perform concept stage hazard analysis
*Isolate open voltage taps
*Incorporate adequate fault protection
*Follow electrical design standards, i.e. National Electric Code NFPA 70 and NFPA 79

DRAFT

*Comply with DOE 6430.1A, General Design Criteria, Section 16, Electrical System
*Follow DOE/EV-0051/1, Electrical Safety Criteria for R and D Activities
*Comply with ANSI / IEEE C-2, National Electrical Safety Code

Pre-operational acceptance testing will include:

*Verify electrical design integrity through testing prior to installation
*Verify software by simulations and preliminary tests
*Provide operational safety procedures

In addition are the continuing methods for electrical hazard mitigation during operations:

*Provide electrical safety training
*Operational testing prior to full system operation
*Follow maintenance requirements including periodic calibrations

4.3 Mechanical Design Safety

Particular attention was placed on the design approach for mechanical items.

Hazards associated with the crane and other auxiliary systems are mostly mechanical in nature, dealing with heavy loads, gas plumbing. Procedures will be developed to protect the power supplies, electrical buses, and gas lines from damage, and to protect personnel from injury related to handling heavy objects.

4.4 Access Control and Hazardous Warning Devices

Access to the GEM Detector will be strictly controlled. Visitors entering the area will be escorted. The SSCL staff escorts will be trained in safety requirements and familiar with the equipment and test operation of the experimental hall.

4.5 Fire Protection

The most essential purpose of fire protection is life safety. GEM Magnet and Detector shall meet the general SSCL design requirements for new buildings under applicable NFPA codes. Common sense rules play a large role in mitigating fire hazards. This means simply that isles must be kept clear, egress from the laboratory be easy and never be obstructed. Access to emergency shut-off switches must remain available.

Emergency response will be provided in accordance with the SSCL Emergency Response Plan. Operational fire hazard mitigation will include policies, programs and procedures developed by ES&H Oversight and the Fire Protection Section of the ES&H Department. These will include programs to control normal operating hazards such as flammable/combustible liquids, smoking, portable heaters, system impairments, electrical hazards, and other fire hazards through scheduled and unscheduled inspections.

DRAFT

The ES&H Fire Protection Program provides for acceptance testing, as well as periodic inspection, testing and maintenance of all fire protection equipment. Acceptance testing of all Fire Protection equipment will be performed in accordance with applicable NFPA Standards and records shall be maintained.

4.6 Medical Certification for ODH

Employees assigned to work in the GEM Magnet may require an ODH physical. Also, the need for ODH monitors and alarms shall be determined for the entire GEM Detector and experiemental hall.

4.7 Safety Training

In addition to the ES&H training of all SSCL employees, the following training shall be required of employees assigned to the GEM Magnet:

*Lockout / tagout procedure
*Electrical / electronic shock hazards
*Crane and rigging training for crane operators
*Fire Extinguisher training
*GEM Detector emergency procedures
*Lifting procedure
* Radiation Safety training
* Compressed Gas safety training

DRAFT

References

1. Environment, Safety & Health Manual, SSC Laboratory, (staff), SM/1/LC/lgr, dated 2/24/92

2. MEDL Safety Evaluation, Gene Cunningham, Aaron LaBasrge, and Frank Greer, MD-ENG-92-L-002, dated 3/6/92

3. Supplemental Environmental Analysis of the GEM Magnet, Ronn Woolley, GEM-TN-92-190, dated 5/13/92

4. System Safety Engineering and Management, Harold E. Roland and Brian Moriarty, 2nd Edition, John Wiley & Sons, Inc., 1990

5. GEM Magnet Technical Design Report, R. Stroynowski, GEM-TN-92-116, dated 7/2/92

DRAFT

APPENDIX A HAZARD ANALYSIS

A.1 Methodology

A.1.1 Purpose

The purpose of this practice is to establish a uniform process for conducting the initial or "Conceptual" hazard analyses and risk assessments for the GEM Magnet. The hazard analysis process documents specific hazards, risks and mitigation actions (planned or implemented) to prevent or eliminate hazards. The hazard analyses also facilitates early identification of hazards allowing for hazard prevention, elimination, and/or control. Risk assessment and mitigation actions are products of a thorough hazard analysis and safety review process. A summary of the hazard analyses becomes an integral component of the Safety Evaluation.

Consistent with the DOE Safety Analysis and Review System, hazards which can cause death, injury, or occupational illness, or damage to facilities, systems, subsystems or equipment must be identified. Risks will be assessed, and mitigation actions taken to reduce hazards to acceptable risk levels. The hazard analysis addresses the adequacy of the preventive or mitigative design features and administrative controls provided to limit the probability of adverse occurrence or the severity of a hazard.

A.1.2 Conceptual Hazard Analysis Criteria and Guidelines

When evaluating hazards and determining adequate mitigation action, safety design and operational requirements were investigated by the design engineers. The following order of precedence for satisfying system safety requirements in the conceptual and technical selection process.

1) **Design for Minimum Risk.** From the first, design to eliminate hazards. If a hazard cannot be prevented or an identified hazard cannot be eliminated, reduce the associated risk to an acceptable level (as defined by DOE Orders)

2) **Incorporate Safety Systems and Safety Devices.** If the design cannot feasibly reduce risk to an acceptable level, provide the use of inherent safety systems and/or fixed, automatic protective safety design features or devices. Testability provisions shall be made for periodic functional checks of safety devices and safety systems when applicable.

3) **Provide Warning Devices.** When neither design, safety systems or safety devices can adequately reduce associated risk, devices shall be designed and used to detect the condition and to produce an adequate warning signal to alert personnel of the hazard and allow personnel to avoid hazards.

   Human factors considerations shall be included in the design schemes to prevent confusion and human errors. Warning

signals and their application shall be designed to minimize the probability of incorrect personnel reactions to the signals, alarms, cues, or other methods which shall be standardized between the different types of systems, whenever possible.

4) **Develop Safety Procedures and Safety Training.** Where it is impractical to adequately reduce the associated risk with safety and warning devices, or procedures, training shall be used. Technical and safety training shall be provided to cover all tasks which have been determined to be hazardous.

Considerations for training and procedures shall be validated and verified by working groups and safety committees. To provide inadequate training or to write procedures which are not followed or enforced will have negative results. Training must be thorough. Procedures must have a step-by-step checklist with the applicable precautions, warnings, and notes on operating limitation and emergency procedures. Procedures are to be clear and must be task-oriented. Procedures may include the use of personnel protective equipment. Special Safety procedures shall be written. Both Tasks and activities judged to be critical by DOE or PRD ES&H Management may require certification of personnel proficiency.

A.1.3 DOE Design Safety Criteria for Risk Reduction

Department of Energy Orders addressing ES&H and General Design Criteria are applicable to safety applications. When determining design safety criteria and requirements, the cognizant engineers use these and other required safety documents and engineering standards.

Many design standards and guidelines, such as applicable sections of ANSI, IEEE and ASME codes have safety related criteria. These will be evaluated to determine applicability to the GEM Magnet designs. Codes that are not directly applicable or suited to the specific technology of the GEM Detector are being evaluated on a case-by-case basis to determine if the design criteria is applicable. Applicable criteria will be considered as requirements or guidelines in the areas of safety technology. Use of many specific engineering standards and commercial codes will help ensure that best engineering practices and safety design practices are followed.

A.1.4 Risk Assessment

The Risks Assessment Matrix and the Severity of Consequences, Figures A-1 & A-2, was provided to assist in the hazard analysis process. It is used to classify hazards by severity, frequency of occurrence, risk levels of acceptability or unacceptability. This matrix was used by the engineers when analyzing and assessing the risk of each identified hazard. Hazards which fall in the medium to high level of risk must be reduced to a low level of risk. In no cases are

unacceptable risks permitted. The matrix was designed in accordance with DOE 5481.1B and associated references.

A.1.5 Responsibilities

The SSC Laboratory ES&H Manual clearly spells out the safety policy of the Laboratory Director and the safety responsibility of Supervisors. The Associate Director of PRD is responsible for the design safety of detectors (hardware, software, personnel, procedures). The ES&H Oversight Office is responsible for ensuring compliance with DOE requirements. The ES&H System Safety Group is responsible for coordinating the safety hazard analysis and review effort and assisting in the development of methodologies and techniques required for development of the SE.

	A Frequent	B Probable	C Occasional	D Remote	E Improbable	F Impossible
1 Catastrophic						
2 Critical	1		2			
3 Marginal				3		
4 Negligible						

FIGURE A-1 RISK ASSESSMENT MATRIX

Severity of Consequences

	Descriptive Word	Personal Illness/ Injury	Equip-ment Loss(s)	Test Unit Downtime	Data Compromise	Environmental Effect
1	Catastrophic	Death	>500K	> 4 months	Data never recoverable or primary program objectives lost	Long-Term (5 yrs or greater) environmental damage or requiring $500K or more to correct and/or in penalties
2	Critical	Severe injury or severe occupational illness	100K to 500K	2 weeks to 4 months	Repeat of last program	Medium-term (1-5 yrs) environmental damage or requiring $100K-500K to correct and/or in penalties
3	Marginal	Minor injury or minor occupational illness	1K to 100K	1 day to 2 weeks	Repeat of last period	Short-term (less than 1 yr) environmental damage or requiring $1K-100K to correct and/or in penalties
4	Negligible	No injury or illness	< 1 K	< 1day	Repeat data point or data requires minor manipulation or computer rerun	Minor environmental damage that readily can be repaired or requiring less than $ 1K to correct and/or in penalties

Probability of Mishap

Level	Descriptive Word	Definition
A	Frequent	Likely to occur repeatedly
B	Probable	during life cycle of syst.
C	Occasional	Likely to occur several times in life cycle of syst.
D	Remote	Likely to occur sometime in life of system.
E	Improbable	Not likely to occur in life cycle of system.
F	Impossible	Possi. of occurrence cannot be distinguished from 0. Physically impossible to occur

Risk Zones

Code		Action
1	HIGH	Imperative to suppress risk to lower level
2	MEDIUM	Operations requires written, time waiver endorsed by Mgmt
3	LOW	Operation permissable

Note: PERSONNEL must not be exposed to hazards in Risk Zones 1 and 2

* Adapted from MIL-STD-882B

Figure A-2 Severity of Consequences

A.2 Hazard Data Worksheets

Specific hazards are summarized from the Hazard Data Worksheets provided. They are grouped according into several categories: electrical, fire/explosion, personnel and general. Results of the Hazard Data Worksheets are summarized in the Safety Evaluation sheets at the end of Appendix A.

A.3 GEM MAGNET Hazard Summary

Results of the Hazard Data Worksheets are summarized in Table A-1.

DRAFT

Hazard Summary

HAZARD CLASSIFICATION	TOTAL HAZARDS	Before Mitigation Risk Zones High	Med	Low	After Mitigation Risk Zones High	Med	Low
ELECTRICAL	9	6	3	0	0	0	9
GENERAL	6	4	2	0	0	0	6
MECHANICAL	7	2	5	0	0	0	7
TOTAL	22	12	10	0	0	0	22

Table A-1 Magnet Hazard Summary

ITEM	SYSTEM/UNIT	EVENT/PHASE	HAZARD DESCRIPTION	RISK	RECOMMENDED ACTION	RISK	REMARKS/STATUS
EL 1	Magnet Magnet power supply Buswork	Magnet quench	Voltage insulation levels of magnet system components exceeded during a quench cycle resulting in high current arcing.	I B Risk: 1	Size quench resistor to limit voltage to less than 1 kilovolt during maximum quench current flow; quench resistors grounded to center to limit voltage to < 500 volts; magnet system components will have voltage insulation comparable to the above levels.	I E Risk: 3	Open.
EL 2	Magnet Magnet protection system Quench detection	Magnet quench	Excessive heating due to failure of quench detection	I B Risk: 1	1. Magnet Protection system will contain redundant quench detection circuitry .2. redundant DC current interrupters will be installed to divert magnet current to the quench resistor. 3. The quench resistor will be sized to remove the stored energy within the specified time limit. 4. Protective actions will be initiated via direct wiring between subsystem control points at the lowest level in the Magnet Control System.	I E Risk: 3	Open.
EL 3	Magnet Electrical	During installation and maintenance	Personnel shock from energized power lines	I C Risk: 1	1. Power supply primary AC circuit terminations will be contained in an enclosure; 2. Access panel to primary AC connections will be interlocked to the primary power distribution circuit breaker; 3. Access panel will be prominently posted with high voltage warning signs; 4. Ground hooks for safing the primary AC circuit will be installed at the power supply; 5. Use lock-out tag out	I E Risk: 3	Open.
EL 4	Magnet	During installation and maintenance	Inadvertent command performs emergency quench.	I C Risk: 1	Include verification codes for all critical commands or provide two of three signaling for critical commands.	I E Risk: 3	Open.

DRAFT

ITEM	SYSTEM/UNIT	EVENT/PHASE	HAZARD DESCRIPTION	RISK	RECOMMENDED ACTION	RISK	REMARKS/STATUS
EL 5	GEM Magnet Electrical	All	Excessive amperage.	I C Risk: 1	Include adequate circuit protection.	I E Risk: 3	Open.
EL 6	GEM Magnet Electrical	All	Electrical Fire.	I D Risk: 2	Provide circuit protection; Provide circuit monitoring; Keep fire loading to minimum by using fiber optics	I E Risk: 3	Open.
EL 7	GEM Magnet Electrical	All	Inadequate ground potential.	I C Risk: 1	Have redundancy in ground attach points.	I E Risk: 3	Open.
EL 8	GEM Magnet Magnetic	All	Electromagnetic interference with controls, instrumentation, computer monitors, etc.	II C Risk: 2	Vital electrical equipment shall be be insensitive to or shielded from the effects of the magnetic fringe field.	II D Risk: 3	Open.

ITEM	SYSTEM/UNIT	EVENT/PHASE	HAZARD DESCRIPTION	RISK	RECOMMENDED ACTION	RISK	REMARKS/STATUS
EL 9	GEM Magnet	Installation	Quench.	II C Risk: 2	NbTi "cable-in-conduit" to provide stability against quench. *Use stainless steel conduit to provide hot spot protection.*	II E Risk: 3	Open.
GN 1	Magnet Vacuum Vessel	Installation or maintenance	Magnet failures release cryogens causing ODH.	I C Risk: 1	Tag vessel ports during inside vessel operations; use lock out and tag out procedures; use oxygen monitors in required areas; safety training; use work monitors; enforce enclosed space procedures.	I E Risk: 3	Open.
GN 2	Magnet All Sub-Assemblies	Installation, Assembly or Maintenance	Rigging fails to prevent large equipment from bouncing, twisting, dropping, lower at too high rate of decent, etc. during lift.	I C Risk: 1	Approved rigging procedures; certified and trained personnel; certified and tested equipment; design reviews; pre-lift inspections; and pre-lift planning reviews.	I E Risk: 3	Open.
GN 3	GEM Magnet Environmental	All	Radiation hazards.	I C Risk: 1	Only trained radiation workers and appropriate equipment allowed in area during cool down; Monitor exposure for all workers; Control access to area as required.	I E Risk: 3	Open.

ITEM	SYSTEM/UNIT	EVENT/PHASE	HAZARD DESCRIPTION	RISK	RECOMMENDED ACTION	RISK	REMARKS/STATUS
GN 4	GEM Magnet Magnetic	Maintenance or operation.	Transportation of loose ferrous objects causing physical damage or electrical short circuit.	II C Risk: 2	Establish procedures to ensure thorough inspection of area prior to start-up; Establish accountability for tools and equipment.	II E Risk: 3	Open.
GN 5	GEM Magnet	Installation	Fire hazard due to welding operations.	I C Risk: 1	Welding operations to be keep to a minimum in the Experimental Hall; Protect equipment as necessary; Use certified welders	I E Risk: 3	Open.
GN 6	GEM Magnet Experimental Hall Components	Maintenance	Structural support and crane support are permanently magnetized	II C Risk: 2	Reverse polarity of magnet; Control access for individuals with pacemakers; Display warnings as appropriate	II E Risk: 3	Open.
ME 1	GEM Magnet Structural Frame	All	Structural failure of frame.	I D Risk: 2	Size equipment to appropriate loads: static, dynamic, cryogenic, seismic, vibration, etc. Loads shall include reasonable "growth" of detector weight.	I E Risk: 3	Open.

DRAFT

ITEM	SYSTEM/UNIT	EVENT/PHASE	HAZARD DESCRIPTION	RISK	RECOMMENDED ACTION	RISK	REMARKS/STATUS
ME 2	GEM Magnet Structural Foundation	All	Foundation inadequate for support or transportation of magnet	II C Risk: 2	Foundation shall be sized to accommodate GEM detector (to include appropriate safety factor); Loads shall include reasonable "growth" of detector weight.	II E Risk: 3	Open.
ME 3	GEM Magnet Structural	All	Excessive corrosion of support structure.	I D Risk: 2	Use corrosion protection as required; control humidity in experimental hall.	I E Risk: 3	Open.
ME 4	Magnet Muon Assembly	During installation and maintenance	Interference of muon assembly against inside magnet.	I C Risk: 1	Clearance between components shall be sized to accommodate a sliding fit; guides or rails to prevent unwanted contact between components.	I E Risk: 3	Open.
ME 5	GEM Magnet Cryogens	All	Vacuum loss.	II C Risk: 2	Used certified welders; Non-destructive inspection of all weldments.	II D Risk: 3	Open.

DRAFT

ITEM	SYSTEM/UNIT	EVENT/PHASE	HAZARD DESCRIPTION	RISK	RECOMMENDED ACTION	RISK	REMARKS/STATUS
ME 6	GEM Magnet	Installation	Debris falls into calibration hall damaging magnet components.	I C Risk: 1	Have guard rails and toe boards at top of shaft; Enforce housekeeping policy; control access to vulnerable areas; Cover or protect shaft opening when not in use.	I E Risk: 3	Open.
ME 7	GEM Magnet Magnet Coil Cooling	Installation	Failure of the cooling system	II C Risk: 2	Natural-convection liquid helium thermosyphon system. Each half-coil is enclosed and is cooled by liquid nitrogen	II E Risk: 3	Open.

DRAFT

DRAFT

Appendix B Definitions

Accident - A mistake, error, unusual occurrence or event having safety implications, or leading to an unsafe condition or event. (see Mishap)

Effect on System - The detrimental effects inflicted on the system or personnel.

Effects of Recommended Action - The effects of the action in lowering risk.

Hazard - Any existing or potential condition that can result in a mishap or accident.

Hazard Description - A brief description of the hazard and cause.

Hazard Severity - A qualitative assessment of the worst potential consequence, defined by the degree of injury, occupational illness, property damage, and/or equipment damage/effects.

Hazard Probability - The likelihood that a hazard will occur.

Hazard Tracking and Risk Resolution System - A method of ensuring severe hazards/risks are documented, tracked, communicated and resolved in a timely manner.

Mishap - An unplanned event or series of events that result in death, injury, occupational illness, or damage to or loss of equipment or property. (see "accident")

Mitigating Action - The action required to eliminate or control the hazard.

Recommended Action - The action required to eliminate or control the hazard.

Remarks - Any relevant comments relating to the hazard.

Risk - A quantitative or qualitative expression of possible loss in terms of hazard severity and hazard probability that a hazard will cause harm and the consequences of that event.

Risk Assessment - An evaluation of the hazard severity and probability and the determination of acceptability/unacceptability based upon mitigation actions to reduce risks.

Risk Zone - A classification of low, medium or high risk: 1 is high and unacceptable; 2 requires management evaluation, decisions, approval; 3 is low and is acceptable risk)

Safety Evaluation (SE) - A comprehensive safety assessment. A documented process to systematically identify systems and operational hazards, to describe and analyze the adequacy of the measures taken to eliminate, control, or mitigate identified hazards, and evaluate potential mishaps and their associated risks. SARs identify hazards, assess risks and means for their elimination and control, and document the approval for various stages of facility design, construction and operation.

Status - Status of actions to implement the recommended, or other, hazard controls.

System Safety - The systematic application of proven engineering and management processes to optimize safety within the constraints of operational effectiveness, time, and cost throughout all phases on the system life cycle.

System Event(s) Phase - Phase of operation (maintenance, testing, beam on, all, *etc.*).

System/Subsystem/Unit - The particular part of the system that is analyzed.

DRAFT

Appendix B Acronyms

ACGIH ..... Amer. Conf. of Gov. Industrial Hygienists
ANSI ..... American National Standards Institute
ASME ..... American Society of Mechanical Engineers
CFR ..... Code of Federal Regulations

DOE ..... Department of Energy
DOT ..... Department of Transportation
EPA ..... Environmental Protection Act
ES&H ..... Environmental, Safety & Health

GEM ..... Gamma, Electron, Muon Detector
HVAC ..... Heating, Ventillation and Air Conditioning
ID ..... Inside Diameter
IEEE ..... Institute of Electrical & Electronic Engineers

LN2 ..... Liquid Nitrogen
LHe ..... Liquid Helium
NFPA ..... National Fire Protection Association

OD ..... Outside Diameter
ODH ..... Oxygen Deficiency Hazard
OSHA ..... Occupational Safety and Health Admin.
PRD ..... Physics Research Division

QA ..... Quality Assurance
R&D ..... Research and Development
SE ..... Safety Evaluation
SOP ..... Standard Operating Procedure

SSC ..... Superconducting Super Collider
SSCL ..... Superconducting Super Collider Laboratory
TLV ..... Threshold Limit Value
UL ..... Underwriters Laboratories

UBC ..... Uniform Building Code
URA ..... Universities Research Association