GEM TN-92-207
Draft

Mechanical Engineering Evaluation of the Muon Chamber Technology Options

R. Sawicki (Chairman) - Lawrence Livermore National Laboratory
M. Gamble, C. Johnson - SSC Laboratory
F. Nimblett - C. S. Draper Laboratory
R. Humphreys - Martin Marietta Science Systems

October 1, 1992

Abstract:

This report summarizes an engineering evaluation of the technologies that are being proposed for the barrel muon subsystem of the GEM detector. A summary of the status of each option is presented along with a comparison of the relative strengths and weaknesses of each design.

DRAFT

DRAFT

Mechanical Engineering Evaluation of the Muon Chamber Technology Options

R. Sawicki, chairperson
M. Gamble
R. Humphreys
C. Johnson
F. Nimblett

October 1, 1992

Abstract:

This report summarizes an engineering evaluation of the technologies that are being proposed for the barrel muon subsystem of the GEM detector. A summary of the status of each option is presented along with a comparison of the relative strengths and weaknesses of each design.

Table of Contents

Page

1.0 Introduction 3
2.0 Evaluation Process 4
3.0 Cathode Strip Chambers 5
4.0 Limited Streamer Drift Tubes 11
5.0 Pressurized Drift Tubes 16
6.0 Resistive Plate Chambers 22
7.0 Engineering comparison 30
8.0 Summary 38

Appendix A - Cathode Strip Chamber engineering report

Appendix B - Limited Streamer Drift Tube engineering report

Appendix C - Pressurized Drift Tube engineering report

Appendix D - Resistive Plate Chamber engineering report

1.0 Introduction

There are presently four different technologies that are being considered for detecting and tracking muons in the GEM detector. These technologies have been studied by different groups of GEM collaborators in the past and are presently being prototyped for performance evaluation in the Texas Test Rig. A decision will soon be made which will select the option that will become the GEM baseline. An important ingredient of that decision is an engineering evaluation of each of the proposed candidates. In order to provide that input into the decision making process an engineering evaluation team was assembled and assigned the charter to review each of the muon chamber technologies from a mechanical engineering perspective and report the findings to the collaboration. This report summarizes this effort.

The intent of this report was not to judge which technology is to be preferred. Instead, the objective was to review the engineering status of each technology, collect all available information, compare the relative strengths and weaknesses of each design and to point out significant engineering concerns or issues. This information combined with the physics performance evaluation that is being performed in a parallel effort provides the necessary information to make a well-informed baseline decision.

The primary mission of the muon system is the precision measurement of muon momentum in the magnetic field bend direction. In order to achieve the required layer resolution three critical placement requirements must be achieved: 1) 50 micron wire-to-wire (random), 2) 50 microns layer-to-layer in a superlayer (random) and 3) 25 microns superlayer-to-superlayer (systematic). This review focused on the ability of each system to satisfy these requirements although not to the exclusion of other issues. Consequently, precision manufacturing and assembly, alignment and stability were central issues that were discussed in detail with the technology leaders and internally within the review group. This report summarizes the findings on these topics in the different sections of this report.

There are four different technologies that were considered: cathode strip chambers (CSC), limited streamer drift tubes (LSDT), pressurized drift tubes (PDT) and resistive plate chambers (RPC). This evaluation focused on the barrel region of the the muon detector system only since neither LSDT's or PDT's are currently being considered in the end cap region. Resistive plate chambers can be used as the triggering device for both the PDT's and LSDT's. For this reason this technology has been reviewed and evaluated independently . However, the baseline LSDT design, as presented in this review, does not use RPC's, instead internally mounted z-chambers provide for basic triggering capabilities. This report evaluates the LSDT design assuming this baseline configuration.

The members of this engineering evaluation team attempted to review the engineering status of each option in as much detail as possible. It should be pointed out, however, that none of the technology teams have finished a detailed engineering design which is complete with drawings, supporting analysis, performance test results, utility designs, and documentation. Instead, most designs are preliminary even though prototype units have already been constructed. There is a significant engineering effort required to be performed no matter which option is selected. This evaluation effort, consequently, was provided preliminary and incomplete information. As a result some conclusions of this report are speculative and are based on the engineering experience of the review panel.

2.0 Evaluation Process

The evaluation process commenced on Sept 1, 1992. At that time four panel members were assigned the responsibility to conduct the review. They were R. Sawicki (chairperson), R. Humphreys, C. Johnson and F. Nimblett. M. Gamble was added about one week later. On Sept 2, 1992 a memorandum was distributed to the leaders of each of the technologies which identified the process to be conducted. To acquaint all of the panel members with each technology, there was an information transfer of the status of the designs from the technology leaders to the review group. This data "dump" consisted of two parts. First there was a meeting during which each leader presented vugraphs summarizing the engineering design. The presentations were structured to cover a set of topics defined by the review panel. They were design, manufacture/assembly, alignment, structural performance, coverage, cost and schedule. The meetings were conducted in a manner which permitted and encouraged questions and discussions to facilitate the rapid transfer of information. Secondly, each leader was required to submit a written summary of his design which documented the presentation and responded to any unanswered questions which surfaced at the meeting. These reports are contained in the appendices of this document. The CSC report was not received by the review panel in time to be included as part of this review. In the appendix the vugraphs presented at the oral review are provided instead.

Following the technology presentations each panel member was assigned the responsibility of evaluating a particular technology and writing a summary of that evaluation. After the drafts of these summaries were completed, the panel convened and collectively reviewed all of the summaries. Each panel member was given the opportunity to incorporate his comments or concerns regarding any technology. Discussion then followed that evolved a consensus of opinion that is documented in this report.

3.0 Cathode Strip Chambers

3.1 Evaluation

3.1.1 *Design*

3.1.1.1 General Design Concept

CSCs are being proposed for both the barrel region and the endcaps as illustrated in Figure 3.1.1-1. The current baseline configuration proposed for the barrel system has three super layers with chamber gaps of 8,4,4. The active areas in the z--theta plane are illustrated in Figure 3.1.1-2 and the phi overlap concept in Figure 3.1.1-3. The chambers have been oriented to minimize the combined effect of track inclination and Lorenz angle. The 16 sector configuration was selected with each sector having four chambers in the outer layer. The chambers are combined to form two towers in each sector giving a total of 32 towers. Chamber sizes and the total count for each size in the barrel region are identified in Table 3.1.1-1.

3.1.1.2 Chamber Mechanical Design

The overall chamber design (Fig. 3.1.1-4) includes four wire layers and four cathode strip layers. The cathode strips are the primary sensing element with the wires providing z-coordinate measurements. The chambers are designed to be fabricated in layers. Each layer is composed of a laminate plate backed with a nonmetallic honeycomb material for strength. Using a lithographic process, the cathode strips are placed upon the laminate plate prior to bonding with the honeycomb. The end closures are glass-loaded polyester (Fig. 3.1.1-5). This layered construction permits the wires to be installed prior to stacking of the next layer. To provide additional stiffness and to maintain gap precision, spacers are placed midwidth and periodically down the length of each chamber.

The relationship of the cathodes and wires is illustrated in Figure 3.1.1-6. The cathode spacing is approximately 5 mm. Between two readout cathodes (which are held at ground) there are two other strips connected to ground through the use of a large resistor. Thus each strip is approximately 1.3 mm wide with a 0.3 mm gap between strips. Optimization of this spacing is in progress to reduce electronics costs.

3.1.1.3 Weight

Chamber weight varies from 73 to 100 kg depending on size (Table 3.1.1-1). The total chamber weight for the barrel section is approximately 117 Mt. Further optimization based upon structural analysis may reduce this weight.

3.1.1.4 Wire/Strip Support

The wires traverse the width of the chambers which are a maximum of 1.32 m and therefore require no intermediate supports. The copper strips are supported by the laminate plates with honeycomb backing.

3.1.1.5 Gas System

The gas environment for each wire is a nonflammable 50-50 mixture of CO_2 and CF_4 at a pressure slightly above atmospheric. Each chamber has a single manifold which provides gas to all wire cells within the chamber. Details of the gas supply system have not been developed, but it is expected to be a conventional low risk system.

Table 3.1.1-1 Size and quantity of CSC Barrel Chambers

Length (m)	Width (m)	Number of Chambers
3.506	0.96	512
2.415	1.32	512
3.052	0.74	128
2.928	0.74	128

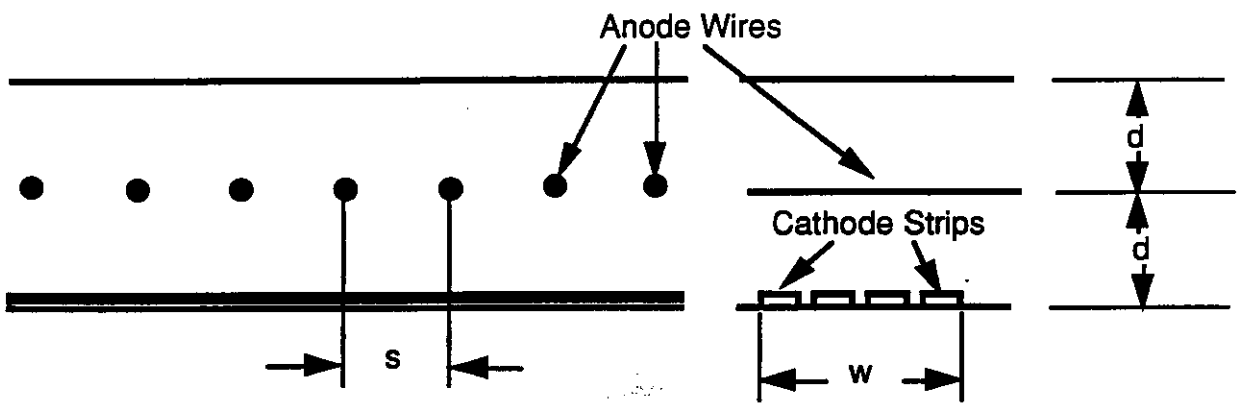

Figure 3.1.1-6 Geometry of the CSC Basic Cell

3.1.1.6 Impact on Truss Structure Design

There are no significant impacts to the truss structure. As a result of the relatively narrow width of the chambers it will be necessary to structurally join the chambers within a sector and attach the ends of these integrated chambers to the structure. Chamber mounting points located at the midpoint of the sector width will have to be provided to support the coupled chambers unit.

3.1.1.7 Superlayer Configuration

Since the chambers are designed with four layers of strips and wires, the eight layers for the inner chambers will be obtained by stacking with overlapping in the phi direction (Fig. 1-3). To maximize coverage in the phi direction (tilt and overlap chambers) and the desire to orient the chambers to minimize the combined effect of track inclination and Lorenz angle, it is necessary to tilt the chamber strip planes with respect to the radial line through their center.

3.1.1.8 Electronic Packaging Requirements

The number of electronic channels in the 8,4,4 configuration is approximately 800,000 cathode elements and less than 100,000 wire readout channels. In the CSC scheme the readout, beyond the initial amplifier and slow and fast shaper, is highly multiplexed. The large number of channels and the need to minimize noise pickup dictates that the electronics be chamber mounted. The cathode electronics have been proposed as standard chamber cards of 64 channels. Even though chamber mounted, they are removable for repair.

3.1.1.9 Size Limitations

Even though it is desirable to make the chambers as large as possible to improve the schedule and to decrease the loss of acceptance due to edges, chamber size is limited by a number of factors:

1) The width of the chambers is limited to less than 1.5 m since the onset of electrostatic instability occurs at this length for the 30 micron wire used in the system,

2) The length of chambers is limited to 4 m since the capacitance of each strip is about 35 pf per meter. To reduce front-end noise, it is desirable to keep the capacitance of each readout strip close to 100 pf.

3) The laminate plates used in the construction of cathode planes is currently limited in size to 3.6 by 1.2 m. However, there are indications that these limits can be raised in the future if needed.

3.1.1.10 Utility Routing

No utility routing has been developed at this time. There appears to be no exceptionally difficult problems in this area. The gaps between the chamber ends is expected to be approximately 10 mm plus any space required for alignment.

3.1.1.11 Failure Tolerance

Since there is a single manifold supplying the gas to an entire chamber, the shut down or replacement of the entire chamber may be necessary should a significant leak develop. The copper strips are basically printed circuit boards and should have high reliability. However, their susceptibility to thermal gradients needs to be evaluated. The wires in the system are short and are not the primary sensing element. The loss of a single wire in a chamber would not be significant. Since the wires are not physically isolated from each other, however, a broken wire could impact adjacent wires and potentially cause the loss of an entire layer.

3.1.2 Manufacture

3.1.2.1 Manufacturing Approach/Philosophy

CSC chambers of 3 m x 1.5 m were fabricated in Russia approximated ten years ago, but they did not have the same accuracy requirements as the current chambers. Chambers up to 2 m x .75 m and having equivalent accuracy requirements have been fabricated in the United States in small quantities. The key difference for the GEM muon subsystem will be requirement for large quantities.

The manufacturing plan calls for the components to be fabricated/procured in the United States and shipped to an assembly location perhaps in Russia. The desire is to use an assembly team with prior experience and understanding of these types of equipment. Assembly is a reasonably straight forward layering process. Access to the wire attachment surface is clear so that the wires can be transferred in large numbers (probably an entire chamber at a time) from a wire holding mechanism, tensioned, and accurately soldered and glued in place.

3.1.2.2 Component Fabrication

The CSC team is currently working with several vendors to confirm that the components can be mass produced to the desired tolerances at relatively low cost. The most difficult item to fabricate, considering tolerances, will be the cathode strips on the laminate boards. However this fabrication technology is a well established photo-etching process used in the printed circuit board industry. Costly machining operations will be avoided, depending more on pultrusion processes whenever possible. There are currently no indications of any fabrication problems.

3.1.2.3 Precision Requirements

The following accuracy requirements have been stated for the CSC chambers:

1) Strip-to-strip placement accuracy - 50 microns
2) Strip parallelism (layer to layer) - 50 microns
3) Strip flatness over 1 meter length - 50 microns
4) Strip straightness - 50 microns
5) Wire-to-strip placement accuracy - 50 microns
6) Knowledge of strip sag - 100 microns

In order to achieve these accuracies precision components and assembly processes will have to be maintained. In addition, monitoring of the flatness of the cathode panel will have to be provided to assure that external influences have not caused out of plane deformations greater than acceptable tolerances.

3.1.2.4 Manufacturing Technology Development Requirements – The technology required for manufacturing of the CSC chambers currently exists. However, fabrication of the cathode strip boards requires a scale-up in the application of this technology. The CSC team is currently working with several vendors to assure this can be accomplished. This does not appear to pose any real problems or significant risks.

3.1.2.5 Vendor Availability
Several vendors are available for the components including production of the laminate material for the cathode strip boards and for the photo-etching process.

3.1.2.6 Assembly Procedures
The process requiring the most precision is the fabrication of the cathode strips and determining their location with respect to the fiducials which are to be externally visible. This is accomplished with the photo-etching process. The laminate boards are made slightly longer than the internal dimensions of the chamber so the fiducials and cathode strips can be accurately placed on the boards from a master as part of the same process. The fiducials remain visible after the chambers are assembled. The most critical part of the assembly process is the vertical alignment of the strips to 50 m. Current plans call for this to be accomplished using large flat washers attached to the four corners of each chamber. These washers align each chamber in a fixture, allowing the four layers to be stacked and aligned very quickly. To assure that the relationship of the cathodes and wires is maintained, a 50 m flatness requirement over 1 m is being imposed during the assembly process. The precision of the chambers can be verified by filling the chambers with xenon gas and using an X-ray source. Preliminary results show this verification technique provides the required precision.

3.1.2.7 Fixturing And Tooling Requirements
Two fixturing/Tooling requirements have been identified in association with the fabrication/assembly of the muon CSC muon chambers. To obtain the necessary accuracy in the cathode strip fabrication process, an extremely accurate photo-etching template or master must be made. An accurate fixture must also be provided to layer-to-layer cathode strip alignment during the chamber stacking process.

3.1.2.8 Size Limitations
Chamber size limitations have been identified previously. The only limitation which was considered restrictive was the cathode plate width which is currently limited to 48 in (1.2 m). There is a desire to fabricate some chambers with a width of 1.32 m. Investigation of other vendors providing the laminate indicates that this material can be made in widths up to 60 in (1.6 m). Therefore there should be no manufacturing size limitations which are considered restrictive.

3.1.3 Alignment

3.1.3.1 Internal - Wire/Wire, Plane/Plane
The relationship of the cathode strips to the external fiducial will be a known quantity for each cathode strip plane established by the photo etching template. Plane-to-plane alignment will be established in the stacking process as explained in Section 3.1.2. No estimates of sensitivity to chamber twist have been considered.

3.1.3.2 External - Superlayer/Superlayer
Details of the external alignment have not been established, however, it is assumed that multiple three point LED/lens monitors. If the Mitselmahker interpolation scheme is employed six straightness monitors will be required for each muon tower. Figures 3.1.1-2 and 3.1.1.3 define 8

towers per sector which would result in 48 monitors per sector. As noted above, other monitors are required in addition to measure the straightness of individual chambers during operation.

3.1.3.3 Fiducialization

The process of locating the fiducials has been described previously in Section 3.1.2.

3.1.4 Structural performance

3.1.4.1 Stiffness Requirements

Limited structural analysis has been performed to confirm that the honeycomb provides the structural support and flatness required for the cathode planes. The analysis performed for a honeycomb plate with no edge supports predicted a sag of approximately 200 microns over a span of 2 m. Knowledge of this sag to better than 100 microns is needed to satisfy alignment requirements.

3.1.4.2 Dimensional Stability

No data was available regarding thermal and vibrational stability.

3.1.5 Coverage

The concepts presented in Section 3.1.1 were developed to maximize phi coverage and result in very little loss in this direction. Some loss will occur as a result of the spacing between chambers which could not be build to cover the full width. No estimate of this spacing was available. There will also be some loss in the theta direction as a result of the space at the end of the chambers which is estimated to be approximately 10 mm plus any space required for alignment and attachment to the structure.

3.1.6 Cost

No cost estimates have been prepared for the CSC chambers in the barrel region. However, the cost estimates presented in the GEM cost book for the CSC components in the endcap region is considered valid for the barrel region technology and have been scaled to obtain the total barrel region cost estimate. Total cost of the barrel region CSC chambers is estimated to be 16,028 K$. This is based on an area cost of $4770/m2 and the area requirements defined in Table 3.1.1-1. The total number of labor hours, 25.6 person years, was estimated by I. Golutvin. An average labor rate of $25/hour was assumed.

3.1.7 Schedule

3.1.7.1 Long Lead Components and Materials

No long lead items have been identified.

3.1.7.2 Component Fabrication Time

No component fabrication times were available.

3.1.7.3 Assembly Time

Assembly time is estimated to be approximately 48 hours per chamber with a production rate of 1 chamber per day.

3.1.7.4 Installation Time

No estimates of installation time were available. However, one could reasonably expect the installation and alignment time for the CSC concept with 32 towers to be larger than those concepts with only 16 towers.

3.1.7.5 First Availability

No estimates were available of when the first chambers could be available after an order to proceed. Three years or less appears to be a reasonable estimate.

3.2 Issues and concerns

3.2.1 Cathode Strip Plate Manufacturing – Even though the technology associated with producing the CSC plates is well known, it has not been demonstrated at the sizes required for the muon subsystem. Prior to a final decision on the appropriate technology, the photo etching process should be demonstrated at full scale. This could be an expensive activity since it requires the fabrication of an accurate template.

3.2.2 Assembly Accuracy – The assembly of the CSC chambers must not only be accurate, but it must also be suitable for mass production. This process should also be demonstrated to confirm viability of the concept.

3.2.3 Structural Performance – Since flatness and maintenance of parallelism between cathode layers is critical to the performance of the CSC chambers, confirmation of their structural performance is essential. Analytical calculations should be performed and actual measurements of the prototype should be conducted to confirm the analytical predictions.

3.2.4 Large Number of Electronic Channels – The number of electronic channels for the CSC technology appears to be a factor of 10 higher than the other technologies. Even with a significant amount of multiplexing, a careful evaluation of the difficulties associated with so many electronic channels including cost, heat dissipation, and cable routing needs to be evaluated.

3.2.5 Large Number of Towers – The selection of 32 towers appears to provide improved performance but adds significant complexity to the installation and alignment processes. There appears to be a clear need for a trade between performance and the added complexities associated with 32 towers. If 32 is the clear winner, then it needs to be compared to the other technologies which may not require this complexity.

4.0 Limited Streamer Drift Tubes

4.1 Evaluation

4.1.1 Design

4.1.1.1 General design concept:

The basic design is a simple square cross-sectioned drift chamber with a central wire. The cells are arrayed in four planes per gas box (chamber), alternated by one half of a cell width. The cells are manufactured from Al angles bonded to a base plate to form a plane of three sided cells, as long as the chamber. The wire anodes are positioned in the center of these cells by insulating bridges that provide the placement accuracy with respect to fiducials located on the reinforcing L shaped frame outside of the total gas box of the chamber. These cell assemblies are stacked four deep, with the base plate of the subsequent layer becoming the forth side of the preceding cells. The upper most layer is closed off with an independent "Z" plate that reads the Z location of the ionization trail through the chamber. All of the Al sheets are 0.010 inch thick, and are at ground potential.

4.1.1.1.2 Weight:

The chambers are estimated to range in weight from 110 kg to 250 kg , with a total of 126 Mt of chambers in the complete barrel section of GEM. These chambers are designed to be from 0.7 to 1.2 meters wide and from 3.8 to 7.6 meters long. There is nothing in the design philosophy that precludes shorter chambers, as required, except that the lost measuring length increases. The width is practically limited by the wire supports and should be considered carefully.

4.1.1.1.3 Wire Support:

The anode wires are supported along their length by insulating bridges made from a machinable ceramic-like material called Mycalex. The wire position accuracy is controlled by the accuracy of the machining of the bridges, their stability, and the positioning of the bridges. The dependence on tension to minimize position variation due to sag varies with the Z spacing of the bridges.

4.1.1.1.4 Gas System:

The chambers are run in the "Limited Streamer" mode, as opposed to "Proportional Drift" mode. In the limited streamer mode the electron signal that reaches the wires has a very steep rise time and can be measured as a step function with potentially simpler electronics than the signal from proportional drift. In addition. the drift time for limited streamer mode is shorter, about 400 nanosec as opposed to 500 to 1000 nano sec for the proportional drift mode. This allows more time for the bunch crossing tagging to be incorporated into the first level trigger. In principle either mode can provide the necessary information to the trigger calculations, making the use of RPCs unnecessary. This has not been completely demonstrated to date. The gasses demonstrated to date for the limited streamer mode have all been flammable. There is the possibility of a non-flammable mixture being identified but this is still to be demonstrated. There is no gas system design nor details of the requirements for such a system.

4.1.1.1.5 Chamber Structure:

The chambers are a stack-up of several layers of components. The precise elements are the bridges that support and position the wires. These are bolted into a precise groove in one side panel and slide along their length on precise pins extending inwards from the other side panel. The two side panels are joined to two end panels to form a rectangular box. The box is closed off with top and bottom panels to provide a gas enclosure. These are honeycomb sandwich panels that provide some of the structural stiffness of the assembly. The cathode plane structures, made from the angles bonded to base planes, are stacked on the chamber bottom and made rigid to the side panels. The Z plate, with transverse strips that will respond to the charge gathered on the anode wire, covers the upper most cathode box plane and has a foam gap filler to the top panel. The gas box is reinforced across its width by a "L" bracket at the location of each bridge. This is in essence an external reinforcing rib that is bolted on to the gas box. The L bracket is also the transfer mechanism for the alignment of the wire/bridge assemblies. There is a design

for an adjustable vertical support to run down the center of the chamber to support the bridges at their mid-points.

4.1.1.1.6 Impact on truss structure design:

The major impact on the design of the truss structure will be the inherent width limitations. The chambers will have to be joined into super layer like assemblies to be supported by the truss structure. This is similar to the PDT concept. The design team also expects the truss structure to provide support at the width ends of each of the L stiffening brackets. This will require truss attachment, and presumably adjustment, points at intervals along the chamber length. This interval varies with the dependence on tension for wire location accuracy but could be every 2 meters along the chamber length. The response of the chamber to deformations of the truss system has not been described and must be considered. This partially offsets the relative advantage of LSDTs being free to be as long as can be built, transported, and installed.

4.1.1.1.7 Superlayer configuration:

The chambers will have four measuring layers. If a super layer requires eight measurements, two layers of chambers will need to be joined to each other rigidly so as to appear to be a single unit to the alignment system. The rectangular chambers can be overlapped in the bend direction the same as any other rectangular chambers. The physics does not require that the chamber planes be tilted with respect to a radial line through their center. The width limitations of not much wider than one meter will require more than one chamber width. These will be overlapped in the bend direction within a superlayer segment to provide complete coverage.

4.1.1.1.8 Electronics packaging requirements:

The electronics are expected to be supported by card extensions to the ends requiring about 50 to 75 mm of space. A successful prototype has been built but did not address minimizing the length. The final design has not been done but is not perceived to be a problem.

4.1.1.1.9 Size limitations:

There is no limitation in length imposed by the physics. There will be a stability consideration that must be addressed by supporting the chamber at regular intervals along its length, possibly every two meters. There is an inherent width limitation of not much more than one meter, like possibly 1.2 meters. This is both a limitation on practical lengths of the bridges and overall chamber rigidity/stability. The thickness is controlled by the addition of the stiff top and bottom plates, the inherent cell dimensions, and the width stiffener across the bottom of the chamber.

4.1.1.1.10 Utility routing:

There is no design at this time but it does not look like a major design limitation.

4.1.1.1.11 Failure tolerance:

The design is very tolerant of the loss of a single wire, though that is not a likely failure mode. All cells in a chamber are in a common gas envelope, making any gas problem fatal to the entire chamber. In super layers requiring eight measuring planes such a gas failure would be tolerated with the remaining four layers intact. The bridge material appears to be stable, once in place, but a failure of one of them or their attachment points would be detrimental to an entire layer. The alignment appears to be very dependent on temperature stability, especially on minimizing temperature gradients.

4.1.2 Manufacture/assembly

4.1.2.1 Manufacturing approach/philosophy:

The manufacturing concept is similar to other successful chamber designs like Iarocci tube detectors. The mechanical assembly is routine with the wire placement being automated in a standard manner. Wire tension determination is easily accessed as each layer of wires is completed. The wire tension is maintained with soldered joints. The wires will be positively located in the notches in the bridges and secured with a drop of adhesive. The wire spacing and location with respect to fiducials will also be measured at this time using a traveling microscope.

4.1.2.2 *Component fabrication:*

The critical fabrications are the bridges and their support/alignment features. The bridges were machined for the prototype by a local Boston company on a CNC machine. The prototypes were accurate to 10 microns. The grooves in the mating metal parts are not challenging to a good machine shop. All other parts or components are available with routine manufacturing techniques.

4.1.2.3 Precision requirements:

The wire positions must be known precisely with respect to the external fiducials. The two components of this knowledge are the wire tension and the mechanical component stack ups. The wire tension should be easy to measure directly but we have no data on aging of solder tension systems to compare with. There is a concept of measuring each wire with respect to the fiducials as each plane of wires is completed. This can produce the required knowledge if it is in a form that can be used. The mechanical component stackups as shown are questionable. There are many parts with tolerances on the order of 20 microns that add, some how, to the final accuracy. The individual tolerances now are shown as 25 microns. The prototype bridges have been measured to better than this but may not represent the production items. The mechanical tolerances will probably have to be tightened for production, with added cost. There is not enough data now to quantify this concern.

4.1.2.4 Manufacturing technology development requirements:

There do not appear to be any developments required.

4.1.2.5 Vendor availability:

There appear to be several choices available for everything, including the insulating bridge materials. The machining does not appear to be limiting.

4.1.2.6 Assembly procedures:

The assembly sequence seems to have been well thought out and does not appear to be demanding. Care must be taken, as in all systems, but not watch maker delicacy. The wire machine should be a variation of any of several that are readily available, but the soldering should be automated. Both of these should be very off-the-shelf technologies.

4.1.2.7 Fixturing and tooling requirements:

Several machines and sets of tooling must be designed and built. These include the multiple wire dispenser and tensioner, the multiple solderer, the automatic wire position monitor, and the automatic wire tension indicator. None of these are difficult but must be accounted for in time and budget considerations.

4.1.2.8 Size limitations:

The proposed chambers are large enough to require dedicated facilities of considerable size but should not be impossible to build. The larger chambers will be in the half ton range so lifting and transport systems must be considered. Again these are not fatal but must be considered.

4.1.3 Alignment

4.1.3.1 Internal-wire to wire; plane to plane:

The wires will be related to the external fiducial independently. The wire placement of the prototype has been measured to have positional accuracy of 20 microns in the wire plane. This was discussed in the precision section, above. These measurements will be made at every bridge, and are applicable only in that bridge plane. These measurements are in a single line and it is not clear how twists or bends of the bridge plane will be detected or what their influence will be to the final accuracy. Some other alignment system will be required to relate each bridge plane to the others. The assumption is that the bridge plane is a rigid plane. The length of each bridge and the adjustable center support bring this into question.

4.1.3.2 External-superlayer to superlayer:

The design team expects that "standard" external alignment schemes will be used to relate each chamber to other chambers in a superlayer. No details have been provided although the following concept has been verbally transmitted. Six radially projective straight line monitors will be located at the ends of the muon sector (3 per end). Connecting these alignment paths will be 9 axial, multipoint monitors, 3 at each superlayer. These monitors will measure both the straightness of the chambers and the chamber position relative to the end points. This concept is very preliminary and subject to detailed evaluation.

4.1.3.3 Fiducialization:

An external fiducial has been proposed for the one end of each bridge plane and the outside corners of the endplates. The prototype was built with precision bushings in the L bracket at the level of each bridge in the R direction.

4.1.3.4 Structural performance

4.1.3.4.1 Stiffness requirements:

The prototype has been measured to have lateral stiffness (in the 1 meter direction) of better than .001 inch deflection. It sagged about 3/16 inch in the depth direction (over a 4 meter span). The combination of the adjustable bridge center support to compensate for bridge sag and the truss structural support at 2 meter intervals are thought to be adequate to accept these stiffness performance measurements, although straight line monitoring will be required.

4.1.3.4.2 Dimensional stability-thermal and vibration:

No information was presented on this but the design shows a large bolted and glued assembly of metal and not-metallic parts. This should be susceptible to vibrations with low frequencies but was not evaluated. The location accuracy depends on the thermal stability of the Mycalex bridges and the Al side panels. These should be very sensitive to both temperature variations and gradients.

4.1.4 Coverage

4.1.4.1 Acceptance in phi and theta:

The chambers can be easily overlapped to manufacture the super layers so that there is complete phi coverage in the first two super layers. The outer superlayer will be wider than practical chambers so that it will also be a candidate for overlapping in phi, within a sector. There has been no work on phi coverage between sectors. In theory, it is possible to achieve some degree of phi coverage between sectors but the layout work is just beginning as of this writing.

The theta coverage will be dominated by the needs of the truss support structure, with nominal allowance for electronics and connections. If there is 100% phi coverage, it is presumed that there cannot be 100% theta coverage.

4.1.5 Cost:

The cost estimates in the cost book are considered very realistic because they represent standard pieces and materials many of which have already been fabricated.

4.1.6 Schedule

4.1.6.1 Long lead components and materials:

None are identified.

4.1.6.2 Component fabrication time:

Estimated at less than one year. No back up to estimate but realistic.

4.1.6.3 Assembly time:

Estimated at 4 years with one factory. No details but again probably close.

4.1.6.4 Installation time:

The individual attachments at each bridge plane of each chamber will increase the installation into the sectors or monolithic structures above ground. They will probably also increase the final alignment and tuning time below ground but not quantified.

4.1.6.5 First availability:

The first chamber could be available within 3 years of the order to proceed.

4.2 Issues and concerns

4.2.1 Design

This is the most complicated of the proposed designs. It has taken a basic old physics concept that was never built for accuracy and forced the pieces to be manufactured accurately enough to get overall system accuracy. The dependence on truss support at each bridge location will be a major design problem with adjusting through kinematic joints. Non-flammability of 9.5% isobutane gas mixture must be confirmed by GEM safety team.

4.2.2 Manufacture/assembly

The piece parts are easy to manufacture and the chamber is easy to assemble. The only issue is the required accuracy of the bridges and the support interfaces. The only realistic back-up will be measuring each individual wire in each plane. This can be automated but must be included in the evaluation.

4.2.3 Alignment

The alignment will be very complicated with the requirements for many additional straight line alignments per chamber. In addition, these will be very sensitive to temperature variations and gradients. 100 micron rotational alignment will be difficult to verify.

4.2.4 Structural performance

The box structure is large and flexible. The design features that could help make it more rigid will add metal material with both weight and radiation length penalties.

5.0 Pressurized Drift Tubes

5.1 Evaluation

5.1.1 Design

5.1.1.1 General Design Concept

The basic pressurized drift tube (PDT) design concept utilizes gas-filled tubes, arranged in rectangular arrays and containing concentrically located sense wires. These 50 micron diameter. wires are held at a different electric potential from the 38mm-ID aluminum tubes held at ground. The PDT baseline design specifies a maximum of 8 layers of tubes in one chamber.
Precise location of the wires as well as gas manifolding is accomplished by high precision end plates approximately 1.3m long. The position of the wires is totally governed by their end boundary conditions. A wires' relationship to its tube is governed by placement using a precision "comb" and gluing or a jewel with a spherical feature to allow small rotations. The gas system for each chamber will be independent from other chambers and will allow operation at a maximum of 4 atm. of internal pressure.

5.1.1.2 Weight

Chamber masses range between 243 kg and 470 kg totaling approximately 55mt of total chamber payload per barrel half. Baseline chamber designs range from 1.55m to 3.46m in width, with 1.55m (about 40 tubes) as a practical handling constraint. Lengths range from 2.3m to 5.0m with 5m as a tube length constraint. Thicknesses range from 0.25m to 0.4m.

5.1.1.3 Wire Support

Anode wires are secured at each end without any intermediate support. They are soldered then glued. Crimping is a possible means of wire fixity but is not the baseline. 300g of tension allow approximately 200 micron of sag, well within the operation specification for this system. At this tension, long term creep is not an issue.

5.1.1.4 Gas System

Non flammable Ar-CO_2 or Ar-CF_4 gas is the PDT baseline choice. At a pressure between 2 and 4 atms. muon momentum resolution can be achieved to within 5% at 500 GeV. The speed of these gases at these pressures can probably meet 1st level trigger requirements. Butane enriched gases, if allowed, would guarantee this trigger capability for the PDT's. Current leak rates have been measured to be 14% per day. The specific cause of this leakage has not been pinpointed. For future chambers, water immersion leak checking or equivalent should be performed. An outer gas enclosure encompassing each chamber has been proposed to contain the leakage. The design of this barrier is conceptual at this time.

5.1.1.5 Chamber Structure

Tubes are layered up between the manifold plates and side stops, structural epoxy is placed between the tubes and between the tube layers. The epoxy cures overnight securing the tubes into a single package which, by construction, is perfectly matched to the manifold spacing. A foam spacer is later glued to the surface of the tubes and a 1/4" hexcell cover is then glued completely around the chamber to form the second gas barrier and to protect the tubes from accidental damage. The chamber rests on the two manifold end plates and is stiff enough so that little or no sag is noted in the center of the package. The chamber can be easily lifted from eyes which bolt onto the manifold plates with no specific precautions to limit flexing as the package is quite stiff in all dimension.
The PDT chamber design is very flexible in its ability to accommodate various azimuthal segmentation. Both the 16 and 32 azimuthal sector solutions are acceptable. The 32 segmentation solution will provide for smaller more maneagable chambers but at the expense of additional alignment monitors. The present baseline is 16 segmentation to simplifiy the alignment

design. The final evaluation of this tradeoff has not been completed. The mating of chamber edges in azimuth can be accomplished with little or no loss of acceptance and with only minor losses in efficiency compared to the center of each chamber. It is also quite feasible to make the tubes conform to the surface of a cylinder while keeping the endplates rectangular, the holes would be located on a circular arc. While this option would be adopted only if it were necessary for physics reasons, it does show the flexibility of the PDT design to meet the GEM criteria.

5.1.1.6 Superlayer Configuration

8-8-4 is the baseline configuration for PDT's. The chamber stacking will be straight forward because of the chambers' rectilinear cross-sections. Eight wire planes in a single superlayer can be achieved with precision machining of the endplates; coupling of two 4 layer chambers is not required.

The overlap capability of the Superlayers can be interpreted to be very good based upon information in the previous chamber structure section.

5.1.1.7 Electronics Packaging Requirements

The PDT electronics will locate amplifiers and discriminators on the chamber while the digital signals will be carried off the chambers via cabling. These custom electronics circuits will be based upon recent application in high energy physics and will be compactly located on the surface of each end-plate (the amplifiers and discriminators will not extend beyond the readout boards as they do in the prototype). Each channel of electronics will consume about 300mW of 5 volt power. Since there are just over 100k channels, cooling for approximately 30kW of power must be provided. Since this will be spread out nearly 300 chambers, one needs to provide each chamber with about 100W of cooling. The individual circuits will be cooled with a closed air flow system for each chamber or group of chambers which will have the heat removed via heat exchangers out of the detector hall.

5V power supplier will be located near the chambers. This will require that AC power to be brought into the detector and properly shielded. HV supplies are not as serious as the power requirements will be much lower and longer runs of supply cable can be accommodated.

5.1.1.8 Size Limitations

There is no physics limitation on length except by the accuracy of predicting the sag of the wire.. Practical handling and production limits for width and length are 1.5m and 5m respectively. The manifold plates are precision hardware and no U.S. vendor has been identified to produce these parts in lengths greater than 2m.

5.1.1.9 Utility Routing

The average chamber will have about 20 signal cables each with 17-twisted pairs. Twenty cables have a cross sectional area 1" thick by 2" wide. There will be 600 sq. in. of cable for the barrel PDT system. 1/4" diameter piping is adequate for gas flow rates through each chamber but the size of the manifolds must increase to a total of 15 sq. in. (two 3" diameter pipes) for the inlet and outlet gas lines.

5.1.1.10 Failure tolerance

The PDT concept using a jewel wire positioning device has a considerable advantage in that replacing a broken wire is trivial. However, the probability of this being required is minimal. The breakage of one wire has no effect on the other wires because of mechanical and electrical isolation. A leaking gas manifold would be difficult to repair if not detected prior to chamber deployment. A gas failure would presumably disable an entire chamber.

5.1.2 Manufacture & Assembly

5.1.2.1 Manufacturing Approach/Philosophy

The manufacture of PDT's is well known. The tasks are repetitive and require a low level of technical skill. Wire fixity is accomplished by soldering and gluing one wire at a time in each tube. Gas introduction and regulation is accomplished by the end plate manifolds. Leak testing of individual tubes and assemblies should be done by immersion in water. O-ring seals are used to

provide the pressure barrier required to operate the chambers at 4 atms. Radiation hardness and elasticity of these O-rings must be balanced.

5.1.2.2 Component Fabrication

The precision manifolds are the singular critical components for fabrication. End plugs which have been machined in the past will be molded and may require touch-up machining to achieve a secure gas seal. In the case of "comb" wire placement a precision comb will be required for assembly.

5.1.2.3 Precision Requirements

Wires must be placed with respect to each other and to the endplate fiducials with an accuracy of 25 microns. Error analysis that has been performed indicates that this is achievable aver a span of about 12.5 m. Full width accuracies have not yet been demonstrated and verified. Utilization of a precision "comb" may also be considered if tolerance stackup allocations turn out to be difficult to satisfy in a production environment. The comb fixture would be precision machined and verified and thereafter be used to provide for highly repeatable wire placement.

5.1.2.4 Manufacturing Technology Development Requirements

None required.

5.1.2.5 Vendor Availability

The baseline manifold requires that two end plates be joined together to span a section. Though the splice plate bridge planned for this is not elegant, it will allow machining smaller manifold plates. This will provide vendor selection flexibility.

5.1.2.6 Assembly Procedures

The following table provides this information and is also the basis for the forthcoming cost estimate:

PDT Average Chamber Assembly: 396 Tubes
16 Sector, 1.5 IN DIA

Operation	Persons	Unit Time (Hrs.)	Total Manhours
Inspect tubes	2	0.02	15.8
Cut tubes to length	2	0.02	15.8
Debur tubes	1	0.02	7.9
Clean tubes	1	0.02	7.9
Flair tube ends	2	0.01	7.9
Inspect plugs	1	0.01	7.9
Put O-rings onto plugs	1	0.01	7.9
Crimp plugs into tubes	2	0.02	31.7
Pressure test tubes	1	0.05	19.8
Inspect test tubes	2	2	4.0
Assemble Manifold Plates	2	5	20.0
Setup Assembly Table	2	8	16.0
Assemble tubes into Manifold	2	0.02	15.8
Insert Wires into tubes	2	0.1	79.2
Seal plug ends	1	0.02	7.9
Install gas fittings	1	1	1.0
Pressure test assembly	2	8	16.0
HV test	2	0.02	15.8
Test wire tension	2	0.02	20.0
Assemble Case	2	10	20.0
Prepare Readout Boards	1	1	12.4
Test Readout Boards	1	0.5	6.2
Assemble Power Buses	2	4	8.0

Assemble R.O. Boards	1	1	12.4
Assemble HV Boards	1	1	12.4
Final testing	2	8	16.0
Package for Shipping	2	8	16.0
Total			418

5.1.2.7 Fixturing and Tooling Requirements
The light weight chambers will require modest lifting and position capability. The use of the comb will require a CNC machine to position the comb or multiple combs accurately in height for wire placement. The combs are light weight and should present no handling problems.

5.1.2.8 Size Limitations
The chambers are light weight but bulky. They will require typical machine shop high bay clearance for their 5m length.

5.1.3 Alignment

5.1.3.1 Internal, wire-wire/plane-plane
The PDT wire alignment is solely a function of the manifold plates accuracy. 25 microns hole placement accuracy is required. External fiducials are used for superlayer to ,superlayer alignment. This must be measured and monitored with 25 micron accuracy. The PDT's are structurally stiff because of the external tube glue bond acting to unitize the assembly. If bridging two chambers together is required, local alignment equipment will be required to initially align the two and perform alignment monitoring.

5.1.3.2 External Superlayer/Superlayer
Standard LED/lens techniques used at CERN and CDF will be used for this alignment. Six alignment monitors per tower will be required. If the PDT chambers are deployed in full sector widths then 3 towers and 18 alignment monitors will be required per sector.

5.1.3.3 Fiducialization
No details of fiducialization for PDT's were transmitted.

5.1.4 Structural Performance

5.1.4.1 Stiffness Requirements
The PDT design is inherently stiff because of its glue bond. No intermediate support is required to support the chambers in the 3-3-3 scenario. The amount of chamber (not wire) sag has been calculated and measured to be about 100 microns which is less than the tube/wire concentricity requirement, about 500 microns.

5.1.4.2 Dimensional Stability - Thermal and Vibration
The alignment structure will be susceptible to thermal variations in its environment. Fabrication should be done and certainly alignment performed at operating temperature. The PDT's are not more or less affected by thermal gradients than LSDT's. Low expansion metals are not feasible for this application

The vibration frequency of the wires is near 30Hz. This may couple to culturally-induced sources on the detector. This frequency is proportional to the wire stress. More stress would increase the frequency but at the expense of higher wire pullout risk.

5.1.5 Coverage

5.1.5.1 Acceptance - phi and theta
Chamber overlap will accommodate full theta coverage. The manifold end plates will not allow full phi coverage. The loss of the coverage has not been quantified..

5.1.6 Cost

The cost estimate based upon prototype production labor and materials, except where changes will be introduced, source quotes, and estimates has a firm foundation.
The detailed cost numbers are presented below.

PDT COST ESTIMATE - 16 SECTORS

Number of Chambers: 288
Number of Channels: 114000

Item	Required (K)	Cost ($)	Note	Total ($K)
Tubes	114	29.92	2	3411
Plugs	228	1.70	1	388
Wire guides	228	1.50	1	342
Wire (m)	570	0.20	2	114
Manifold plates	0.57	2500	2	1440
Case	0.288	300	2	86
R.O. Boards	3.563	50	3	178
Test/assy Equipment			3	200
Total components				6159
Labor	130	25	4	3250

Notes:
1. Based on estimate from source
2. Based on prototype, no allowance for quantity discount or alternate methods
3. Estimate
4. Estimate (450 hrs/chamber)

5.1.7 Schedule

5.1.7.1 Long Lead Components and Materials

None

5.1.7.2 Component Fabrication Time

No details presented but there do not appear to be any serious considerations for long fabrications time.

5.1.7.3 Assembly Time

Based upon the labor estimates presented earlier, the Dubna facility can produce 3-5 chambers per week. This represents 3-4 years total for manufacture and assembly of all chambers.

5.1.7.4 Installation Time

May be less than other technologies if full sector width chambers are constructed.

5.1.7.5 First Availability

No specific data provided.

5.2 Issues and concerns

5.2.1 Gas system

Gas leakage which has been measured in the prototype to be 0.5% per hour must be understood and controlled. Comprehensive leak testing procedures must be established for production units.

5.2.2 Endplate manufacture

The precision machining of full width endplates has not yet been demonstrated. If the endplate is segmented, which is likely, the precision coupling technique must also be proven.

5.2.3 Wire pullout

Cathode wires are under high and pullout of the wires at the solder joints has been a problem in the past. Redundant epoxying of the wires may help this problem but a technical evaluation of the concept should be performed.

5.2.4 Thermal distortion

The PDT chamber is basically an all aluminum structure which has a high thermal expansion coefficient. No analysis was presented that quantified the expected thermal distortion with respect to the positional alignment requirements. This must be performed to determine if temperature or displacement monitoring is required.

6.0 Resistive Plate Chambers

6.1 Evaluation

6.1.1 Design

6.1.1.1 General Design Concept:

The basic design concept of an RPC is a thin rectangular chamber of 11.0 mm nominal thickness with a sensitive gas gap thickness of 2.0 mm. The remainder of this thickness is comprised of two layers of bakelite (.015" thick with relatively low bulk resistivity ,10^{11}ohm centimeters) with a thin conductive layer of Aquadag® graphite paint on the back side of each to which the 10 KV high voltage connections are made; two layers of rigid foam (insulators, 4 mm thick each); two aluminum ground planes (0.010" thick) and two layers of mylar with aluminized backing formed into rectangular capacitive pickup strips. The 2 mm gap is maintained by PVC spacers 10 mm in diameter and 2 mm thick spaced every 10 cm. resulting in coverage of 99%. The particular design proposed for the GEM barrel muon trigger system utilizes two of these layers with the position of the spacers being staggered to result in 100% coverage and 99% redundancy of tracks. It is expected, but not shown, that the rate limit of this configuration will be better than 1000 Hz/cm^2.

This design has no precision wires or conductors within the sensitive gas gap. An ionizing particle passing through this gas gap while there is a high voltage potential across the gap, causes an electrical discharge, a spark, which discharges in a few nanoseconds. This discharge is capacitively coupled to the aluminized strips resulting in signals 0.5 volts high and a rise time of 2 to 3 ns. The design, measures both bend plane and non-bend plane coordinates. Conditions which are critical to the operation of the RPC are 1) stability of the materials used (bulk resistivity of bakelite), 2) stability and uniformity of the gas mixture and 3) the mechanical uniformity of the sensitive gas gap (±200 microns). Note that this tolerance is only on the local gap tolerance not the overall flatness of the detector! Some limited testing has been done by lifting one corner of a 2 x1 meter chamber by 10 cm with no measurable change in performance.

Surrounding the perimeter of these two measurement layers is a "U-shaped" aluminum frame which ties the package together. In addition it serves as convenient attachment points to the drift chambers and also provides space for plumbing and the electrical connections but not the cabling.

6.1.1.2 Weight:

Weights supplied for the RPC system assume the two layer configuration described above arranged into three superlayers with the RPCs attached to the selected drift technology on the outer surface of the drift chambers. The information presented assumed that there was a significant overlap of chambers in the "z- direction", parallel to the beam line. If z-overlap is implemented, the net result will be close to a wash. The combination of a slight reduction in weight due to a reduction in z length will be compensated by an increase in width to achieve phi coverage.

The weights of the RPC chambers as presented have been dramatically reduced in weight and appear to contribute only 1000 pounds per sector (16 sectors per end) including the weights of cables, connectors and miscellaneous brackets. However, the weight calculations do not appear to include the three aluminum ground planes (each 0.010"thick aluminum). This will add an additional 12,200 pounds to the total RPC system weight or 380 pounds per sector. Individual chamber weights range from 97 to 200 pounds. These weights include a 38% increase for the weight for the ground planes which were omitted.

6.1.1.3 Strip Support:

As indicated in the above description, there are no wires to support and the aluminized mylar pickup strips are secured by adhesive to the foam spacers. The system for connecting to the strips and accurately relating these pickup strip positions to some external fiducials, which will be the only interface with outside, is not adequately described. This feature needs to be defined in

order to permit evaluation of the ability to meets accuracy goals. No serious technical problems are foreseen in accomplishing this task, but it should be explained!

6.1.1.4 Gas System:

A gas system design has been completed which appears appropriate for the job except for a few speculative concerns. The system is of the recirculating type due to the presence of Freon® in the baseline mixture. This baseline mixture for the RPCs uses a flammable gas mixture; 66:32:2, Ar:iso-butane:Freon®. In fact, the mixture is quite explosive. The percentage of n-butane, 32%, greatly exceeds the Lower Explosive Limit (LEL) of 1.9%. This could be a problem for anyone contemplating use of flammable gasses in excess of the LEL. In addition, the RPCs also currently require a 2% addition of a Freon ® which may create problems with ozone depletion regulations. There is a belief by the technology advocates that a safe gas mixture such as 49:49:2 ; CO_2:CF_4:Freon® will also function, but there is no experimental data to backup these beliefs. This should be evaluated as soon as possible!

Another serious concern about this gas may be the availability of the "Freon®" which has refrigerant designation number 13B1,Bromotrifluoromethane, $CBrF_3$. This material has a high ozone depletion number"10" where refrigerant R12 has a value of"1".

One other concern is that there doesn't appear to be any mention of possible contamination of the gas system by O^2 and N^2 and thus no indication of how to eliminate these contaminants in this recirculating system. The source of such leaks is of course the atmosphere and the significant partial pressure difference between the outside atmosphere and the chamber pressure which will only be in the order of 0.5 inches of H_2O pressure difference.

6.1.1.5 Chamber Structure:

The design of the chamber structure is not yet very advanced due to the minimal engineering effort to date. However, the basic concepts of construction described appear sound and are in no way stressing the state-of-the-art. Given some reasonable design engineering effort, there is nothing obviously risky in this design!

6.1.1.6 Impact on Truss Support Structure Design:

If the current phi overlap support structure design is maintained, then the RPCs in the middle layer cannot be overlapped along the z-axis as the advocates would like due to the presence of aluminum structural plates between the chamber ends; however, phi coverage of 100% can be achieved. In addition, the inner layer is difficult as well since hardware to tie the drift chambers to the structure would have to penetrate the RPCs which would lie on the outer radius of the chambers,between the drift chamber and the support structure. It is unclear how this will affect the theta coverage for the trigger if RPCs are used. Layouts addressing this potential coverage problem should be completed to better understand the impact of this potential problem.

6.1.1.7 Superlayer Configuration:

The RPC trigger system is arranged in three layers with each of the RPC layers mounted on the outer surface of the respective drift chamber superlayer to minimize the production of delta rays in front of the precision drift chambers. There are no layouts to indicate how the chambers interface with the drift chambers or how they affect or are affected by support structure options. It appears that the current RPC design could accommodate almost any drift chamber design, but layouts which integrate the selected technologies should be examined as soon as possible. Strip widths in the phi direction (bend plane) are 1.3 cm for all layers and variable in theta (non-bend plane) for each layer; 3.9 cm, 6.5 cm, 8.9 cm for the inner, middle and outer layer respectively.

The actual drift chamber layouts now under consideration, in particular the ones that permit 100% phi coverage, do not permit overlap in the "z-direction" for the middle layer due to plate structures between the chamber ends and for the inner layer due to chamber support hardware which creates a similar plate obstacle. Overlap in the "z-direction" does appear possible in the outer layer but since the RPCs are on the outer surface of the drift chambers, the added thickness of an additional double layer will further detract from the lever arm of the muon system.

6.1.1.8 Electronics Packaging Requirements:

There is no need for any electronics inside the magnet due to the high signal level (0.5 to 1.0 volts). Electronics Packaging will be limited to conventional electronics cards in standard racks mounted to the outside of the magnet.

6.1.1.9 Size Limitations:

The first indicated size restriction which may cause a problem is the limitation in the standard width of the bakelite material which faces the active spark gap. The 48 inch width limit requires that the widest chambers have two splices to make the necessary chamber width. A scheme of splicing utilizing a lap joint and adhesive is the suggested joining procedure. This scheme calls for joining the bakelite to the aluminized mylar pickup strips on the outside surface only, in effect leaving a crack between the two butted pieces of bakelite. In the descriptive text, there is a mention of "glue" but it is not clear how it is used nor how structurally secure it is expected to be. There is not a continuum across this gap and it should be shown that the other material in the layers in the laminate assembly contribute the major percentage to the overall laminate stiffness, otherwise the joint is suspect. This appears to be the potential for a weak link in the design. Bakelite joint development must be addressed to verify that the proposed scheme can fulfill the gap tolerance and stability requirements.

No mention was made of the availability of the 0.010" thick ground planes on the two outer surfaces and in the middle of the RPC sandwich in the necessary widths. Although this may be a problem, it is not clear that it represents any significant fabrication problem. Overlapping and or butt welding could be options if this aluminum sheet is not available in adequate widths.

Finally the aluminized strips on mylar also appear to limited to 48" widths so that wider chambers must be fabricated by placing one or two of these strips side by side and laminating with another layer of mylar which is no aluminized. In principle, I see nothing wrong with this process, but again there is a clear need for work to fully define the processes, develop the processes, fixturing, and alignment requirements of such an intermediate process.

6.1.1.10 Utility Routing:

High voltage and plumbing lines present no problems due to the small number of items involved. Signal cables are however a different story. Cable bundles will take up 69 in^2 which will either be a square bundle 8.3 inches on a side or wide flat bundles 1.1 x 66 inches. Where and how such a bundle would be attached to the RPC or the support structure is unclear. It was also an indicated verbally, that the length of the various signal cables was no longer a concern if all cables had the same type termination (matched impedance and therefore matched propagation times) This may give other routing options, but no others were described.

One suggested flow pattern for the gas system was described which is intended to equalize pressure drops through the system; it connects the inner layers in series. This would appear to be a good design except that it makes separation of the magnet halves more difficult by necessitating the breaking of all of these interconnects between muon sectors on opposite magnet halves. This problem of matching pressure drops for each portion of the gas system, can probably be easily accomplished with appropriate flow restrictors.

6.1.1.11 Failure Tolerance:

The fact that there are two measurement gaps in series, each with an area efficiency of 99% , creates an incredibly fault tolerant detector. Only a gas system problem, such as an overpressure situation, appears capable of causing a large portion of the detector to fail. It is the intent of the RPC advocates to run the two independent gaps as two independent detectors two minimize the potential for losing an entire superlayer in a given sector.

The possibility of aging of the bakelite material to the point where efficiency is dramatically reduced, due to the sparks at high particle rates is another failure mode which should be understood. Some recent test results from Irwin Pless at MIT, communicated verbally, indicate only a 1% decline in efficiency for an equivalent 5 SSC year exposure. More complete details on this data will hopefully be presented soon to give a little more substance to these test results which appear very significant.

6.1.2 Manufacture/Assembly

6.1.2.1 Manufacturing approach/philosophy:

The basic manufacturing approach is to build the largest possible area detector without compromising the few critical design parameters. These are 1) material stability (particularly in the spark gap), 2) stability of the gas parameters and 3) uniformity of the spark gap. Since all of the potentially important gaps in this sandwich-style detector are either filled with rigid foam or solid spacers separated as required, the spacing tolerances are easily maintained.

In principle, the detector could be deformed into a somewhat curved shape if it were beneficial. The RPC detector can tolerate 10 cm of deflection without any noticeable performance loss. In practice, the RPCs will probably be physically attached to the drift chambers. The deflection of the RPCs will then be dictated by the flexural characteristics of the drift chambers themselves and the nature of the attachment point locations.

Material issues to be addressed in the selection of the final materials for the RPCs are outgassing characteristics of the plastics, susceptibility to UV light, potential radiation damage and stability of bulk resistivity of bakelite. There should be some understanding of the potential for gas system contamination and then what effect this would have on the design of the gas system.

Long term experience utilizing these RPCs without degradation, under lower rate conditions than those expected at SSC, while encouraging, still leave many unanswered questioned which can only be addressed by additional testing probably on small RPCs at high particle rates to understand the potential for breakdown of the bakelite in the spark gap. A verbal description of some some recent preliminary aging results at MIT, described briefly in the previous section, are encouraging on this score

6.1.2.2 Component fabrication:

Fabrication of components seem to be routine except, as indicated before, for the splicing of the thin bakelite components and possibly the ±100 micron tolerances on the spacing between adjacent strips for any of the capacitive pickup strips as well as the width of the strips. This tolerance is only on the individual component that is, a given sheet of mylar and aluminized strips. However, if multiple strips are required for larger width or longer chambers, then this tolerance must also apply to aligning the separate sheets of material as well. It is believed that these tolerances within a given sheet of material are within the realm of possibility but do feel that verification of the ability to fabricate these elements in the sizes needed must be demonstrated. It is unclear how well one can assemble multiple width sheets of strips without some better definition of the processes. All other components are commercially available and represent no serious risks.

6.1.2.3 Precision Requirements:

The most severe tolerance requirement in the assembly is the ±100 micron tolerances on the spacing between adjacent strips for any of the capacitive pickup strips as well as the width of the strips. This is a reasonable mass-production tolerance for this sort of process ; however, it is still unclear that it is even required. The tolerance of the gas gap uniformity is 5% of the 2 mm gap or ±100 - 500 microns. This should be a trivial tolerance to produce in mass-production. After the strips are installed into the assembly, the tolerance on knowledge of the strip position goes up to ± 2mm. This appears to be in slight conflict with the desire to know strip locations in an absolute three degree of freedom sense to ± 1 mm An overall tolerance study and allotment of individual tolerance limits for the entire muon system, of which this is a portion, is needed.

6.1.2.4 Manufacturing Technology Development Requirements:

The process of developing a reliable splice in the bakelite sheets which performs well in a high rate spark gap, utilizing the thin (0.015" thick) bakelite sheet, clearly needs development and evaluation in a test RPC.Also, the process of joining the aluminized mylar strips together with sufficient accuracy needs to be developed and demonstrated. Manufacturing and assembly processes in general need to be better defined in order to really understand what needs to be developed!

6.1.2.5 Vendor availability:

At least one vendor already exists who could very likely fabricate the entire detector. The indication that General Technica of Colli, Italy is currently contracted to build some 400 RPCs for L3 at CERN is in fact a reason for both optimism and some concern. The capacity to fabricate these detectors must be understood as must be the willingness of General Technica to participate with SSCL and LEP in a fair manner. On the other hand, it is clear that other sources could fabricate these detectors, but there would have to be a period of development of the new source. Other such potential sources indicated are LLNL, MIT and Tsing Hua University in Beijing China.

6.1.2.6 Assembly procedures:

The description of the assembly is very limited with essentially no indication of precisely how these operations are to be carried out or what the tolerances associated the assembly process really are. There are no sketches of the processes or any indication of the fixturing required. What is described, which is basically a series of lamination steps followed by sealing these assemblies into a structural frame all appear feasible. It is unlikely that there are any show-stopping assembly issues given a reasonable effort to engineer this activity.

6.1.2.7 Fixturing and tooling requirements:

There was a statement that special tooling is not required for the RPC system. This appears rather optimistic. At minimum, there will be some albeit simple special handling fixtures, fixtures to accurately position gap spacers, adhesive application systems, some fixturing to address the splicing of the thin bakelite into a large sheet assuming that the design continues to utilize this material and finally some fixtures to position and hold the pickup strips with respect to the support frames which will contain the detector fiducial marks. Again this effort needs more engineering to define the work, but it is unlikely there are any show stoppers.

6.1.2.8 *Size Limitations:*

The size limitation to keep the chamber size less than 4 meters is limited primarily by handling considerations, weight, chamber sag and dimensions .Most of the concerns were described in the DESIGN, Size Limitations section above. It is somewhat difficult to separate the two area without details of the processes required to accomplish the various tasks. Given the completion of the assembly of these various laminate layers, inclusion of these layer into a structural frame appears to offer no serious technical risks. Although the assemblies can be quite large, they are not very heavy.

6.1.3 Alignment

6.1.3.1 Internal - wire/wire, plane/plane:

The tolerances indicated for strip to strip and plane to plane in a chamber are in the order of ±1mm. Within an individual chamber, there should be no difficulty achieving the accuracy. Elsewhere in the RPC input information, there was an additional accuracy requirement expressed for ±100 micron knowledge of the position of the pickup strips. No reason can be seen for such an accuracy level unless it is anticipated that these RPCs could be used for a higher accuracy sagitta measurement than is needed for the trigger function. This same comment applies to another ± 100 micron tolerance on the space width between adjacent pickup strips.

6.1.3.2 External - superlayer/superlayer:

Again the accuracy requirements are ± 1mm knowledge of the strip positions in the two layers. If the RPCs are piggy-backed onto the drift technology this accuracy can be attained in the process of aligning the drift tube technology.

6.1.3.2 Fiducialization:

No problem is seen placing the pickup strips to an accuracy of better than ±1mm with respect to an external fiducial mark placed on the edge of the aluminum RPC frame. There is a statement in the description indicating that ± 1mm knowledge in three degrees of freedom with respect to the drift chamber fiducial will be adequate. Ultimately, tolerances must be such as to achieve a few

mm (± 2 to 3)pointing accuracy of the tracking system with respect to the beamline. Depending on the nature of the error, allowable tolerances depend on where the specific chamber is positioned in the array because the pointing error has both a linear and angular component. The statement that ±1 mm is adequate in three degrees of freedom, in fact strains the ability of the surveying team to understand the position of the RPCs, exclusive of any errors which will arise from magnet activation. This ±1 mm tolerance in three degrees of freedom may in fact be quite difficult to achieve. If it isn't in fact necessary, then its specification can boost cost and risk.

6.1.4 Structural Performance

6.1.4.1 Stiffness requirements:

Structural stiffness appears adequate to achieve the performance goals of the RPCs. The possible future integration of the RPC with the drift tube structure, may improve the situation by permitting a sharing of structural rigidity of the two detector elements.

6.1.4.2 Dimensional Stability - thermal and vibration:

There is no indication of any thermal analysis. The fundamental frequency for a 3 x 4 meter chamber with 2 mm bakelite is estimated to be "less than 10 hz" (assume this means approximately 10 hz.). Stress levels calculated in the frame of such a chamber supported on four corners is somewhat high at 25ksi, however, since creep is not likely to be a serious problem for the RPC accuracy requirements, this is not a critical factor. Use of thinner and lighter bakelite will improve this already adequate stress situation.

6.1.5 Coverage

6.1.5.1 Acceptance - phi and theta:

The design of the RPC appears capable of covering the same area covered by the drift chamber technology. In the case of phi coverage, no problems are foreseen. Precise details indicating how the drift chambers and RPCs are integrated together must be addressed soon.

For theta coverage however, there may be a problem covering the same angular range as the drift chambers with the RPCs as the trigger. The fact that the RPC is mounted on top of the drift chamber combined with the fact that z-overlap is not possible with the structure design which permits 100% phi coverage, creates this situation. There is no indication of the angular loss due to this effect. Layouts of the entire integrated muon would help understand the problem, but the problem will not easily disappear. Inclusion of the fully projective six element tower alignment system will worsen this theta loss since RPC and alignment lines will interfere with each other.

6.1.6 Cost

The cost estimate submitted does not represent the same system used as the basic design which led to some impressively light weights and most likely low radiation lengths. In spite of this, it is still likely that the changes in design will have only a minimal effect on cost. If changes do occur, they will likely drop due to the very conservative nature of the estimate. Costing is based on vendor "quotes" and catalog prices which do not appear to account for quantity discounts. There is no indication of costing for design of detector hardware or fixturing or fabrication and evaluation of fixturing which will of course indicate lower costs. On the other hand, there are other included costs such a structural support cost of $300/m^2 which appear high.

6.1.6.1 Assumptions, basis:

The design described above was assumed. Labor rates applied are typically national average rates.

6.1.6.2 Equipment, material and labor:

There is no detail costing of any assembly support equipment, measurement devices, test systems. Costing to design, fabricate, procure and evaluate any support equipment was done with minimal knowledge of the hardware actually needed.

6.1.6.3 Development, engineering, procurement/fabrication, and assembly/installation:

This costing was extracted from the last cost estimate with some changes included for the worksheets supplied at the latest presentation to the engineering evaluation committee.

6.1.6.4 Cost uncertainties:

1) Actual system design costs, 2) Inclusion of adequate funding for chamber and support equipment design and development. 3) The cost of a potential RPC stiffening structure which isn't designed and quite frankly is not clear that this structure is even needed.

6.1.7 Schedule

6.1.7.1 Long lead components/material:

All material are stock items and can be acquired within 120 days.
Support equipment not addressed.

6.1.7.2 Component fabrication time:

RPCs — *Component Fabrication not addressed separately. Construction rate of 160* square meters per week, the average chamber is 10 sq. meters, 16 chamber per week, total of 288 chamber will take 18 weeks, 100% contingency makes this 36 weeks which is workable for any known schedule option. No detail schedule provided.

Gas System — All component parts assumed to be of the shelf.

Support Equipment — No details supplied.

6.1.7.3 Assembly time:

Gas System assembly time is assumed to be six months based on the assembly of a similar system at LLNL. Some coordination with the SSCL Gas System personnel is probably in order to better understand how this system will be integrated into the experiment.

6.1.7.4 Installation time:

It has been assumed that the installation time is dictated by drift chamber installation. An estimate of the actual time is needed to validate assumptions of installation time needs which to date have not included inputs from the RPC advocates.

6.1.7.5 First availability:

First production RPC January 1996.

6.2 Issues and concerns

6.2.1 General Design:

The general issues of concern in the overall design area are; 1) the potential effects on efficiency due to aging of the bakelite material in the spark gap; 2) suitability of the gas and stability and uniformity of the gas mixture and 3) mechanical uniformity of the gap when utilizing this lightweight and as yet unproven mechanical configuration.

6.2.2 Weight:

Failure to be able to construct the chambers utilizing the light weight construction techniques will result in a somewhat heavier RPC system which will place additional stiffness requirements on the attachments and support structures.

6.2.3 Gas System:

The issue of flammable gas with percentages above the lower explosive limit (LEL) of the proven gas mixtures and the lack of data on non-flammable options create a technical risk which in turn can lead to safety problems and additional costs. The potential problem for any low pressure gas system to be contaminated with O_2 and N_2 due to the significant partial pressure differences with respect to the surrounding air in conjunction with some leak paths must be addressed.

6.2.4 Size Limitations:

Although most of the proposed processes for assembling the RPC appear to reasonable extensions of existing assembly procedures, there has been no source analysis done to verify that manufacturers can in fact assemble these components to the desired accuracies. The most critical of these are the stability of the mechanical structure of the bakelite which interfaces with the spark gap and subassembly of multiple width pickup strip assemblies.

6.2.5 Component Fabrication:

Chambers wider than the typical normal material widths of 1.2 meters (48 inches) require cross-laminating multiple pieces to get the full widths. In the case of strips on mylar, tolerances between adjacent strips are ±100 microns. Within a given strip, this tolerance is not likely a problem. To put two pieces side by side and laminate them in a production process needs to be demonstrated. Other processes such as the bakelite, foam and mylar laminates must be demonstrated to have the necessary stability to maintain gap tolerances and demonstrate predictable performance characteristics.

6.2.6 Coverage in theta:

The problem of providing the same or better theta angular coverage than that achieved by the drift chambers with the RPCs as trigger chambers has not been demonstrated for current configurations of chamber layouts and muon support structure options.

7.0 Engineering comparison

From a mechanical engineering perspective each of the muon chamber technologies offer very different approaches. Precision wire or strip support mechanisms, alignment strategies, structural characteristics of the chamber assembly, assembly sequence, cost and other characteristics are quite different for each option even though the basic precision measurement requirements are similar. The details of these designs were presented in the previous sections. In this section a comparison of the engineering concepts are summarized to provide visibility into the relative strengths and weaknesses of each design. First a numerical table is presented to quantitatively compare the options in several different key categories. The following sections describe in a more qualitative manner how the designs differ relative to one another and which design have noteworthy strengths or weaknesses in each of the main topics of review.

7.1 Table summary

	CSC	LSDT	PDT	RPC
Max. chamber weight - kg	100	250	470	92
Total chamber weight - kg	117,000	126,400	55,000	20,560
Maximum chamber width - m	1.32	1.2	3.46	3.3
Maximum chamber length m	3.506	7.65	5.0	3.8
Maximum chamber thickness - m	.124	.22	.40	.03
# chambers/sector (1/16)	32	18	9	9
Total # chamber	1024	576	288	288
Inactive chamber edge zone - m	not defined	.065		.04
Phi overlap capable	Yes	Yes	Yes	Yes
Inactive chamber end zone (not including alignment)- m	0.01	0.015		.04
Projected wire-to-wire (strip-to-strip) placement accuracy (random) - microns	50		20	1000
Total power dissipation(internal to magnet)- W	100,000	10,000	30,000	NA
Proven performance with non-flammable gas	yes	yes (9.5% isobutane)	yes	no
Operating gas pressure - inches of water	0.1	0.1	30 - 60 (psig)	.25
Total gas volume - m^3	60	456	576	10.9
Total # electronic channels	1,000,000 (with multiplexing	110,000	114,000	33,000
Total material cost - K$	14,800**	3663**	5959	954
Total assembly labor cost - K$	1228***	3607	3450	1796
Total engineering and development cost - K$				1355
Total cost - K$	16028	7270	9409	5742
Total assembly time - person years*	25.6	38.1	62.7	24.7

* Based on 1920 worked hours per year and

1) CSC = 48 hr/chamber
2) LSDT = 127 hr/chamber
3) PDT = 418 hr/chamber

** no electronic costs included
*** based on $25/hr and 25.6 person years

Table 7.1-1. Engineering parameter table

7.2 Design, manufacture and assembly

7.2.1 Sector configuration

The proposed sector chamber configurations for each technology are shown in Figure 7.2.1-1. In each case phi overlap is assumed. It is judged by the review panel that all configurations can be achieved but it is also pointed out that none of the technology options presented any detail which defined the interfaces between the chambers and the supporting truss structure. Given the tight space constraints between chambers this will be a challenging design assignment regardless of the technology choice. Without the details there is no way to judge if any design could be implemented more easily. No overlap is assumed in the theta direction; this is to allow space for the radial stiffening members of the truss structure and for the alignment system lines-of-sight.

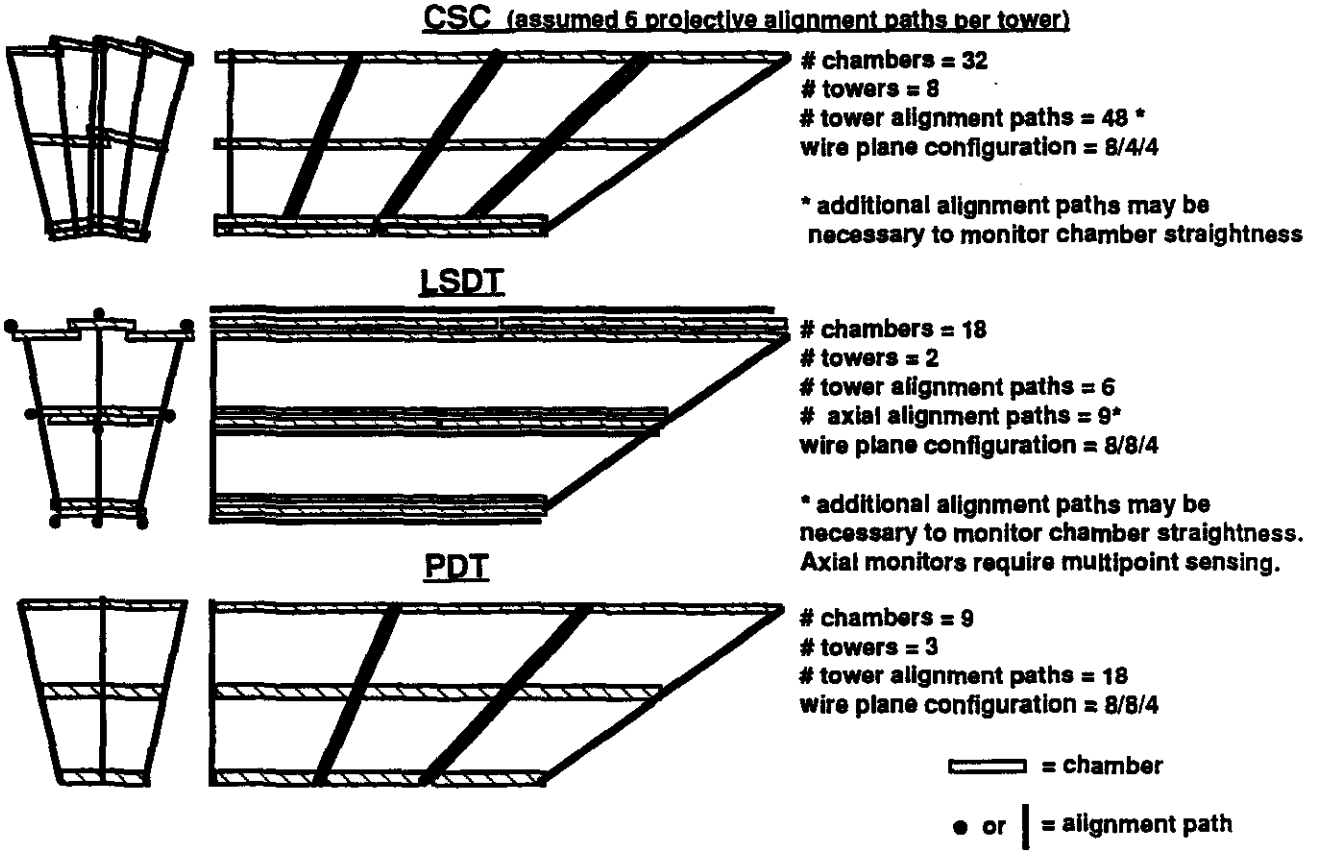

Figure 7.2.1-1. Sector configuration comparison

The number of chambers in a sector is the fewest for the PDT option, 9 compared to 32 and 18 for the CSC and LSDT,respectively. This is because a single PDT chamber can cover the full width of a 1/16 th sector and can support 8 full wire planes. The penalty that the PDT concept pays for this advantage is that a single chamber is much heavier, 470 kg compared to 100 kg and 250 kg for the CSC and LSDT, respectively. It is interesting to note, however, that the total weight of the PDT barrel system is the lightest of the 3 options, less than half of the weight of CSC and LSDT.

The number of alignment paths required is established by the number of towers within each sector, if the Mitselmahker interpolation alignment scheme is deployed. This strategy requires 6 projective alignment paths per tower as pictorialized in Figure 7.2.1-1 for the PDT and CSC's. This results in 48 paths for the CSC's and 18 for the PDT's. The LSDT concept proposes to use multipoint axial alignment monitors to compliment the 3 radial monitors located at each end. At each superlayer level, 3 stretched wire monitors are located to measure the straightness of individual chambers planes and the relative position of the points between the end planes at theta = 90 and 30 degrees. It is noted that not all of the individual LSDT chambers will have a straightness monitor attached and that the dimensional stability between chambers in a superlayer plane must meet stringent alignment requirements. The required stability has not been demonstrated.

7.2.2 Design/manufacture/assembly

7.2.2.1 CSC

From a design/manufacture/assembly perspective the CSC chambers offer a number of attractive features. The individual chambers are light weight and can be handled and installed relatively easily. Precision of the strip locations is established by the lithography process and includes fiducials which can be viewed external to the chamber. Once the lithography process is established strip planes should be capable of being produced with highly repeatable precision tolerances. Wire planes are quickly manufactured by wrapping a wire around a transfer frame, gluing the wires to the frame and then cutting off excess wire. Relative location of these wires to the cathode planes is dependent on the straightness of the edge frame (glass loaded polyester pultrusion). There is some concern that the straightness of the pultrusion will satisfy the alignment tolerances. This is not a major issue, however, since a simple but precise machining cut could easily correct the deficiency. Flatness of the cathode planes is established by vacuum platens that are used to hold the plane while they are being bonded to the honeycomb backing panel. This is a clever design feature that promises high precision and repeatability.

Assembly of the CSC chamber is potentially more rapid than either of the drift tube technologies. Cathode planes already bonded to the honeycomb panels and pultrusion will be stacked up one on top of the other. In between the wire planes will be glued into place. Referencing between cathode planes will be easily achieved using precision locating washers which are accurately placed at the cathode plane corners and which contact an alignment jig during assembly.

7.2.2.2 LSDT

The LSDT wire plane assembly has the potential for automation and maintaining reasonably low assembly times. Wires can be stretched over the mycalex bridges and soldered into place quite rapidly. However, there are many other components that must be assembled and aligned before the assembly is complete. In particular bridge supports located at the ends and middle of each bridge must be adjusted.

The mycalex bridges are fixed at one end and pinned at the other to permit thermal expansion of the bridge with respect to the support box structure. This is a good engineering concept in principle but requires attention to engineering details to properly implement. The pin and and its mating hole must precision toleranced and the placement of the hole must be accurately located relative the fixed end of the bridge so that spurious bending moments are not introduced.

The principal fiducials of the LSDT chamber are located on the L-bracket. Their locations are conveniently positioned near the bridges. Alignment transfer from the bridge to the fiducial can be done precisely. How these fiducials are registered to the radial and axial alignment paths has not been clearly presented. Since there are as many as four chambers joined together in a single superlayer this is a critical issue.

7.2.2.3 PDT

Although the operations involved will be quite simple, the assembly of the PDT arrays will be the most time consuming of any of the technologies. Individual wires will have to be threaded through long tubes and then individually soldered and bonded into place. Intense quality control monitoring will be required to assure that the proper tension in the wire is achieved during this process. These procedures have been worked out although they must be adapted and proven in a high rate production environment. Wire location is dependent on both endplate hole registration and tolerance stackup of wire support components. Convincing evidence has been presented which demonstrates that this approach is feasible. However, data has not been presented which verifies that the alignment tolerances have been achieved in an integrated full scale prototype. Extrapolating to the the full 3 m width will be a challenge requiring sophisticated machining processing and meticulous quality control.

The design feature of the PDT concept that is most attractive is that the wires are attached to the support structure only at their ends. If the wire tension can be maintained constant (experience at L3 and elsewhere supports this), then the precise position of the wire sag can be calculated with the required accuracy. With the LSDT and CSC designs, intermediate supports require additional alignment monitors and raise additional concerns regarding structural stability of both the chamber and the truss support structure. From this perspective the PDT option is a much simpler design.

7.2.2.4 RPC

The RPC design is the simplest of any of the technologies. Layers of rigidized foam, bakelite, and aluminized mylar sheets are stacked together with PVC spacers to maintain proper gap widths. Assembly tolerances are large in comparison with the other technologies and consequently production processes can be be quite simple and rapid. The design relies upon surface coating the bakelite with linseed oil prior to operation. Aging of this surface in the presence of electric arcs is an outstanding issue that must be addressed. Accelerated testing is presently being performed and preliminary results using static dispersive plastics are encouraging.

7.2.3 Size limitations

Because the CSC and LSDT chamber widths are limited to slightly more than 1 meter, chambers using these technologies must be coupled with a common, integral, stable structure in order to subtend a sector width. Although this seems reasonable it is a concern that no design was presented as to how this would be accomplished. Is there space for the required structure, how will alignment performance be affected, will additional alignment monitoring paths be required? These and other questions need to be addressed.

The PDT baseline design includes hybrid end plates that are bolted and bonded together to form *a single large, full sector width structure. The precision of this process has not been* demonstrated but, if successful, will eliminate the complicating requirement of chamber coupling.

RPC's also have width limitations. It is proposed that the thin bakelite and mylar panel be joined together by some yet to be proved process. A development effort is required to demonstrate the feasibility of satisfying this requirement.

In the length direction LSDT proposes the longest chamber, nearly 7.2 meters. This is an advantage from the perspective of reducing the number of radially projective straight line monitors but introduces the need for axial straightness monitors. CSC's have length limitations less than 4 m which coupled with its width limitations demands a high number of straightness monitors. PDT chamber lengths are proposed at 5 meters resulting in tripartitioning in the z direction.

7.2.4 Gas systems

It should be noted that only the RPC technology presented a design for the gas system. The other technologies only recognized the need and importance of developing these engineering details in the future. Consequently, we can only indicate our concerns rather than critique specific proposals.

From a gas perspective there are three general issues that are of concern : flammability (explosiveness), leakage and contamination.

The CSC and PDT baseline gas is a mixture of CO_2 and CF_4 which is nonflammable and highly desirable from a safety perspective. Neither LSDT's or RPC's have been demonstrated to achieve all of their technical requirements with a nonflammable gas (flammability of LSDT baseline gas is under review - 9.5% isobutane may be acceptable). In fact, the proposed RPC which includes n-butane and freon, as indicated in section 6.1.1.4, is explosive. Development efforts are required to obtain a safer gas or appropriate safety features must be implemented to permit their use.

Leakage in the PDT system was presented at 0.5 % per hour which corresponds to about 44 refills in one year. Although no design details were shown, it was proposed that a secondary gas containment barrier be constructed around the PDT tube array. This would sweep away the leaking gas and properly dispose of it. Unless a tighter gas system can be achieved this secondary system will be required complicating the design and adding cost.

Contamination of the gas streams in the low pressure technology is an issue that has not yet been carefully addressed. In low pressure systems other gases, particularly O_2 and N_2, can be introduced unless a careful gas system design is implemented which can compensate for ambient pressure conditions and still maintain the small but positive internal pressure. Sensitivity of each chamber design to these gas contaminants was not presented.

One final point regarding gas systems is that the CSC cathode planes that are bonded to the outermost panel will be deformed by the internal gas pressure. Since the pressure is low, and the panels are stiffened by internal spacers this may not be a problem. However, no calculations were performed to confirm that anticipated pressure fluctuations caused by varying environmental conditions did not cause deformations exceeding the precision tolerances.

7.2.5 Failure tolerance

The drift tube technologies have the obvious advantage that if a single wire breaks only a single channel of information will be lost. RPC's have no wires so they are immune to this failure. CSC 's are more significantly affected by wire breakage. A full plane of wires could be lost in the event of a single wire failure.

RPC's have a potential lifetime issue associated with the spark erosion of the oiled bakelite surface. No evidence was presented that this is or is not a problem. Testing must be performed, however, to resolve the concern.

7.3 Alignment

The alignment requirements as presented to this review panel by the technology leaders are as follows.

<u>CSC</u>

1) Strip-to-strip placement accuracy - 50 microns
2) Strip parallelism (layer to layer) - 50 microns

3) Strip flatness over 1 meter length - 50 microns
4) Strip straightness - 50 microns
5) Wire-to-strip placement accuracy - 50 microns
6) Knowledge of strip sag - 100 microns

LSDT

1) Wire placement accuracy - 25 microns (systematic)
2) Wire placement accuracy - 50 microns (random)
3) Wire plane placement accuracy (layer to layer) - 125 microns (radial)

PDT

1) Wire placement accuracy - 25 microns (systematic)
2) Wire placement accuracy - 40 microns *random)
3) Wire plane placement accuracy (layer to layer) - 50 microns
4) Wire/tube concentricity - 500 microns

RPC

1) Parallelism of gap walls - 200 microns
2) Strip straightness - 100 - 500 microns

The design of the PDT chamber approaches the precision requirements in the simplest way. Wires are stretched between two precision machined bulkheads. As long as the wire tension is maintained to specification the sag of the wire can be precisely determined and the wire placement accurately interpolated. Initial placement accuracy of the wire is also dependent upon the buildup of tolerances of the components which hold the wire in the bulkhead - a glass filled delrin insert and a jewel wire guide with a precision wire hole. A detailed stackup of tolerances indicates that better than 20 microns of systematic wire error placement can be achieved. The random error is estimated to be 30 microns. Both values satisfy requirements. A second option for attaching the wires is also proposed. The concept uses a precision wire "comb" or fixture which holds the wires in place during soldering. This technique looks promising to the reviewers and should be evaluated before a final decision on the attachment mechanism is made. Stability of the wire placement during operation should be good since the PDT chamber structure is relatively stiff. The resonant frequency of the wires is 30 Hz; this is above the lowest modes of the chamber support structure but not so high that dynamic deflections can be ignored. No calculations were presented to quantify the effect. It is pointed out that the thermal expansion coefficient of aluminum is about 23 x 10-6/ C. Thus, for a 3.5 meter width and a 1 degree temperature rise the relative placement between wires located at opposite ends of the bulkhead will be about 80 microns. It is believed that this can be accurately compensated by measurement knowledge of the temperature of the bulkhead or using the straight line alignment monitor information and the Mitselmahker interpolation functions. Overall, stiffness of the PDT chamber should be very high since the tube array will be bonded together.

LSDT's rely on precision mycalex bridges to achieve wire to wire placement accuracies. The required accuracy has been demonstrated on prototype components. In order to achieve all of the alignment requirements the end bridges, which are stacked 4 high at each end, and intermediate bridges spaced axially between the ends must all be coaligned to within 125 microns. In addition, this alignment must be maintained or monitored when the chambers are mounted on the aluminum truss support structure. The truss will be moving due to thermal, vibration and magnet motions which will induce misalignment in the LSDT. End bridges and intermediate bridges will be moving with respect to each other and their relative positions must be monitored. The axial alignment paths shown in Figure 7.2.1-1 are required for the LSDT to provide for this monitoring. These paths, however, are not projective as required by the baseline Mitselmahker interpolation strategy. What impact, if any, they would have on the alignment strategy is unknown and must be resolved. Also, as noted in 7.2.1, only one straightness monitor is provided for each superlayer. Since there are more than one chamber per superlayer, the

straightness of all of the chambers in that layer must be inferred from a single measurement. The accuracy with which this can be done has not been demonstrated and is a matter of concern.

The alignment approach of the CSC's contrasts dramatically to the either of the drift tube options. Critical wire-to-wire placement requirements are replaced by strip-to-strip requirements which are achieved by lithography rather than mechanical tolerancing. This is a simple and attractive solution that also should be dimensionally quite stable (in the plane of the strips). The main issue here is whether or not the strip planes can be manufactured to the precision and in the size required. Although full size panels have not been fabricated, qualified vendors have reviewed the requirements and believe that they are achievable without any development effort. This remains to be proven. It should also be noted that the fiducials of the CSC chambers are lithographically processed at the same time and with the same precision as the strips. In addition, these fiducials *are viewable external to the chamber. This eliminates some placement tolerance stackup issues* which both the LSDT and PDT technologies must address.

Although the strip-to-strip placement accuracy seems to be achievable other CSC alignment tolerances are of concern to the review panel. The two most important issues are 1) 100 micron knowledge of the radial location of a strip in between end support points and 2) wire-to-strip placement accuracy of 50 microns. The outer radius chambers will be about 3.75 m long if four chambers are used to subtend the length of the barrel muon system. Along each of the lengths the CSC chamber will sag and can be torqued at the end points if a 4 point support system is used. If these distortions exceed 100 microns then they must either be predictable or be measured so that they can be compensated. Additional alignment monitors may be required to provide this information. No strategy was presented to the review panel other than one idea which was briefly mentioned which considered mounting an alignment fiducial on the end of the spacer rods which extend through the thickness of the chambers and are located at intermediate points along the length of the chamber. The review panel expresses concern for the lack of information regarding this important requirement. It seems feasible that such a system could be developed but it will add complexity to the alignment system design. Wire-to-strip accuracy must take into account all of the tolerances which can contribute to the error. No analysis was presented that included all of the contributing effects of component fabrication, assembly, and *structural distortion. For the size of the chambers being contemplated this issue needs to be* addressed.

RPC internal alignment requirements are quite modest in comparison to the other technologies. Maintaining the gap spacing tolerance to 200 microns is is achieved by multiple, precision plastic spacers located in between layers. The uncertainty that remains is what is the maximum spacing between spacers that can be permitted without gravitational sag or thermal distortions violating the requirement. Analysis should be performed to confirm the baseline configuration. The requirement for straightness of the strips to be within a tolerance of 100 microns is not viewed to be beyond current manufacturing techniques.

7.4 Structural performance

Each of the proposed designs, except for the RPC's require high structural stability in order to meet the precision alignment tolerances. Thermal distortion, gravitational sag, and vibration can cause performance degrading displacements. There was presented, at the review meetings and in the subsystem reports, very little quantitative information regarding how well any of the technologies satisfied the requirements from this perspective. Essentially no analysis results or *test results were reported. Thus, conclusions on the relative merits of each of the designs in this* category are speculative.

The stiffest structure is likely to be the PDT tube array. It consists of multiple tubes bonded together forming a cross section with high bending inertia. Coupling of this array with the bulkheads is through multiple o-ring interfaces at each tube end. This diminishes overall stiffness but to a degree which is not predictable without analysis. The CSC chambers rely on high specific

stiffness honeycomb panels to provide for dimensional stability. Spacer rods periodically located down the length of the chamber will couple the hexcel panels together contributing additional stability. The stiffness in the largest panels is not expected to be great enough to obviate the need for additional straightness monitors which will measure relative radial deformations. LSDT stiffness is determined by the coupling of aluminum sidewalls, hexcel baseplate and cover sheets and steel L-brackets. This composite structure at its greatest proposed length of 7 meters is baselined to have intermediate truss supports to compensate for the expected flexibility. This indeterminate coupling has the disadvantages as listed in the alignment section above and must be compensated with additional real time straightness measurements.

None of the options proposed a concept of how the chambers are to be attached to the truss structure. There is no doubt that a support mechanism can be designed and implemented for each design. However, the details of that design are needed in order for the interaction with the truss structure to be assessed and a complete evaluation of the structural performance of the design to be performed. Also, coupling of chambers together to achieve a greater width may be required. No details of this was presented and it could could have different structural performance implications for each design.

7.5 Coverage

All of the options are amenable to overlap in the phi direction so there is little difference between the technologies in this category. However, implementation of this overlap may be quite different. This is difficult to judge at this point in time since no details of the chamber supports are available. The PDT support design may be simpler because there are fewer chambers (in the phi direction) to couple together in a single sector.

Loss in acceptance in the theta direction is determined by the length of the inactive zone, clearance and space for the alignment systems. These details are also not yet defined so no conclusions can be made regarding technology differences. The key determining factor will be how efficiently the alignment monitor system scan be coupled with the chamber structures.

7.6 Cost

In general, the cost effort for each of the technology options attempted to breakdown their system into individual parts and perform a bottom-up cost estimate. In some cases vendor estimates or actual costs of prototype parts were used. Assembly costs were broken down into subtasks and assigned effort hours and standard labor rates. Data provided by the technology leaders are provided in Table 7.1-1 and have been augmented by the following numbers. LSDT material cost was taken from the June 16, 1992 muon subsystem cost estimate (GEM-IN-92-13 Rev 11). All of the CSC costing information was based on the following base rates: unit chamber material cost =$4770/m2, barrel area=3100 m2, assembly time = 25.6 person years and assembly labor rate = $25./hr . Overall, the cost estimates were considered by the review panel to be first order estimates that should be used to only to compare relative costs in a general way. Please note that there are significant differences between these values and those listed in the GEM cost estimate. These differences could not be resolved in the time permitted for this review. It is presumed that the values provided to the review panel are more accurate since they were provided at a later date and are presumably more up-to-date.

Based on the figures provided to the panel the RPC system is clearly the lowest cost technology, 5.7 M$ for material and assembly labor. The components are inexpensive, require minimal precision and can be assembled quickly. PDT and LSDT costs are nearly the same, 9.4 M$ and 7.2 M$ respectively. Differences with GEM cost book values must, however, be resolved before a form conclusion can be reached. CSC's are clearly the most expensive, 16.2 M$; material cost (14.8 M$) is somewhat compensated by the low assembly cost (1.2 M$).

8.0 Summary

8.1 CSC

From an engineering perspective, the CSC's offer a design that promises rapid assembly in a production environment. Precision is achieved with accurate templates of several types: lithography negatives, vacuum platens, precision pultrusions and fixtures. Although initial engineering evaluations have determined that all tolerances are feasible, the accuracies of these templates need to be demonstrated at full scale. Installation of the anode wire planes will also be quite rapid using the proposed transfer frame. Fiducials created during the processing of the strips will be accurately placed and since they will be externally viewable will eliminate some alignment tolerance stackup present in the other technologies. The chamber operates with a non-flammable gas mixture of CO_2 and CF_4. Because of width and length limitations 32 chambers are required per 1/16 sector. Chambers will have to be joined in the phi direction to cover the full sector width and to minimize the number of alignment monitors required. Details of this coupling have not yet been conceptualized and the impact on alignment requirements have not been assessed. Because of the anticipated structural flexibility of the design, it is anticipated that straightness monitors will have to be attached to each long chamber. This will add to the complexity of the alignment and data handling systems. Varying environmental conditions including temperature, pressure and truss structure movements may have an impact on the precision achievable with this design. Structural analysis coupled with careful design will have to be implemented to assure that the stability of the chambers will meet alignment requirements.

8.2 LSDT

The LSDT technology provides the longest chambers, over 7 m. This reduces the number of towers in a sector, the number of required alignment paths, and simplifies the the overall design. However, to achieve this length the chambers stretch wires over multiple mycalex bridges which are attached to an aluminum, honeycomb stiffened box structure. This configuration requires that chamber straightness monitors be mounted to each chamber to compensate for the expected flexibility of the design. These monitors are baselined to extend the full length of the tower obviating the need for radial alignment monitors in the central part of the sector. This alignment scheme has not been analyzed to confirm its precision capability. In the phi direction, LSDT chambers will have to be coupled together to cover the full width of a sector. Details of this design have not been conceptualized and the impact on alignment requirements have not been assessed. Details of the assembly of the LSDT chamber were presented with engineering drawings The process adapts itself to rapid wire installation, alignment and soldering. The assembly of the cathodes and chamber structure is simple and rapid although great care must be taken not to disturb alignment critical components. The LSDT baseline gas mixture includes 9.5% isobutane. GEM safety team needs to confirm non-flammability of gas mixture.

8.3 PDT

The PDT engineering is based on a very simple principle - a thin wire under tension will sag from a straight line in a predictable way. Thus, in the PDT chamber there are no intermediate support to the wire planes. This has the distinct advantage of simplifying the chamber alignment system and alignment requirements. No internal adjustments are necessary and no external straightness monitoring systems are required. Precision of the chamber is dependent primarily on the ability to drill precision holes in a 3.5 m long aluminum plate (which is segmented in the baseline design) and the buildup of the tolerances of the components that actually hold the wire onto the end plates. Results of dimensional measurements, which have already been made, demonstrate that required alignment tolerances can be achieved (for a half width). An alternate backup scheme using a "comb" mandrel also seems quite feasible. If the proposed maximum width can be achieved then only a single chamber is required to cover a full 1/16 sector width. This obviates the necessity of coupling chambers together as is required for the CSC and LSDT designs. The gas manifolding is built into the endplate eliminating space consuming external manifolding. The baseline gas is a non-flammable mixture of CO_2 and CF_4 operating at 2 - 4 atmospheres. Gas leakage is an issue and is presently estimated to be 0.5% per hour. A secondary containment

barrier around the tube array is proposed to sweep away the leaking gas. This is an unfortunate complication to an otherwise simple design. Assembly of the chambers will be labor intensive requiring more time than any of the other technologies. The assembly process, however, is quite simple requiring relatively low skill level labor.

8.4 RPC

The RPC engineering design is the simplest and most risk free of any of the technologies. High precision of all of the parts with the exception of the the PVC spacers, which establish the gap between bakelite panels, is not required. The assembly can be highly automated and rapid. Once installed into the muon sector the RPC assembly can withstand large distortions and still meet performance requirements. To meet the baseline width, a joining technique for the bakelite panels will have to be developed. Aging of the bakelite panel in the presence of the electric arcs has not been quantified and requires accelerated testing in the future to determine the impact, if any, on the material design. The baseline gas includes n-butane and freon which present safety and disposal concerns. Alternate gases need to be explored in the near future. Gas contamination, primarily O2 and N2 which may be introduced by ambient pressure fluctuations relative to the low pressure RPC gas system, must be evaluated.

Appendix A - Cathode Strip Chamber engineering report

The Cathode Strip Chambers for the GEM Muon System

Presentation for the Engineering Evaluation of Muon Chamber Technology Options

SSC Lab September 10, 1992

I.A. Golutvin, JINR, Dubna, Russia

and

V.A. Polychronakos, BNL,USA

(For the GEM CSC Group)

OUTLINE:

Why CSC

Design Concept
- Basic Chamber Parameters
- Size Limitations
- Acceptable Tolerences
- Chamber Structure

Superlayer Configuration
- 8-4-4 Design
- Size/Number of Chambers
- Weights

Manufacture/Assembly

Alignment
- Example of alignment budget for Endcaps

Electronics

Cost

Why CSC?

The Muon System needs to perform the following functions:

a. Provide precision measurement along the magnetic field bend direction.

b. Provide the transverse coordinate (z in the Barrel, R in the Endcaps) with coarser resolution.

c. Determine the bunch crossing for a given event.

d. Furnish the primitives for a Level 1 Trigger (crude calculation of the Transverse Momentum).

In Addition:

a. It should be possible to industrialize its construction to a large extent.

b. Be affordable.

c. It should be possible to align the System to the required precision.

d. Should be robust:

Its performance immune to Temperature, Pressure, gas composition, and gain variations.

The modules easy to handle and replace if necessary

Fault tolerant.

Handle rates at $L=10^{34}$

CSCs satisfy <u>all</u> requirements.

Based on Multiwire Proportional Chamber Technology
(has been around since 1968 used in hundreds of experiments)
Basic Technology is the same although CSCs have are read out differently and have some special requirements:

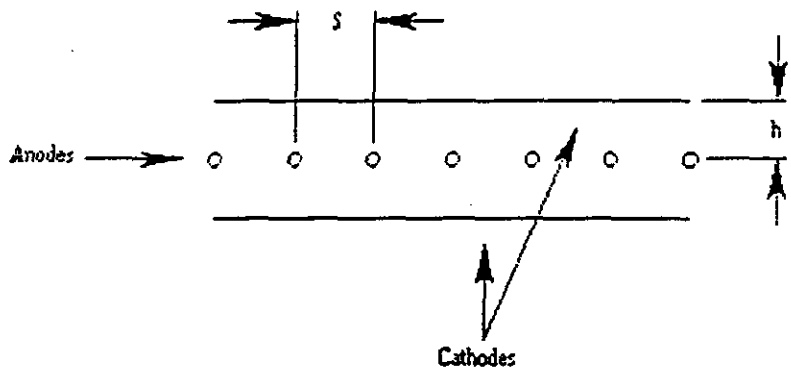

PWC	CSC
Wires are read out (discr.)	Cathode strips with readout pitch w are read out (pulseheight with 9-10 bit presicion).
Resolution = s/sqr(12)=1mm	Resolution = 0.01w = 50 um. (Design resolution 75 um)
h/s = 3	h/s = 1

Precision required in s and h for stable operation and uniform gas gain are generally 2%. flatness ± .002 in between spacers (≈1m)

really parallel in electrostatic stable

Sag of plane ≈ 0.5mm. in x axis

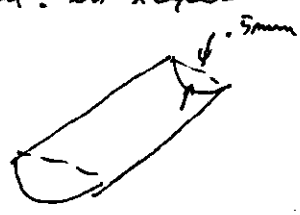

What limits the size of a CSC chamber?

Length: Commercially available boards ==> 12 ft

Capacitance of the strips (50 pf/m)==> 3m

Width: Available boards==> 4ft (Note 1)

Effect of inclined tracks limits sector width to ~11°

Electrostatic Stability limits wire length (chamber width) to about 1m.

Note 1. Glass laminates can be made by industry in larger widths. Then copper deposition techniques could be used for producing the strip pattern.

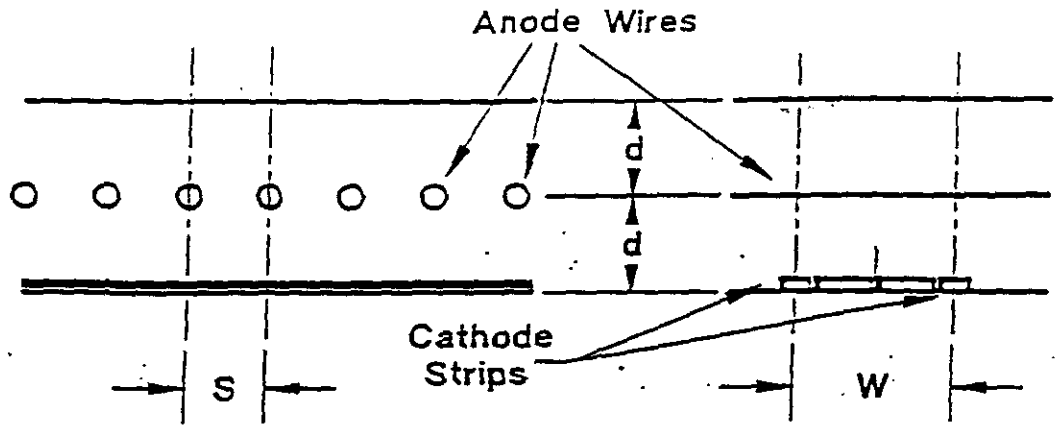

Figure 1: Geometry of the basic cell of the CSC

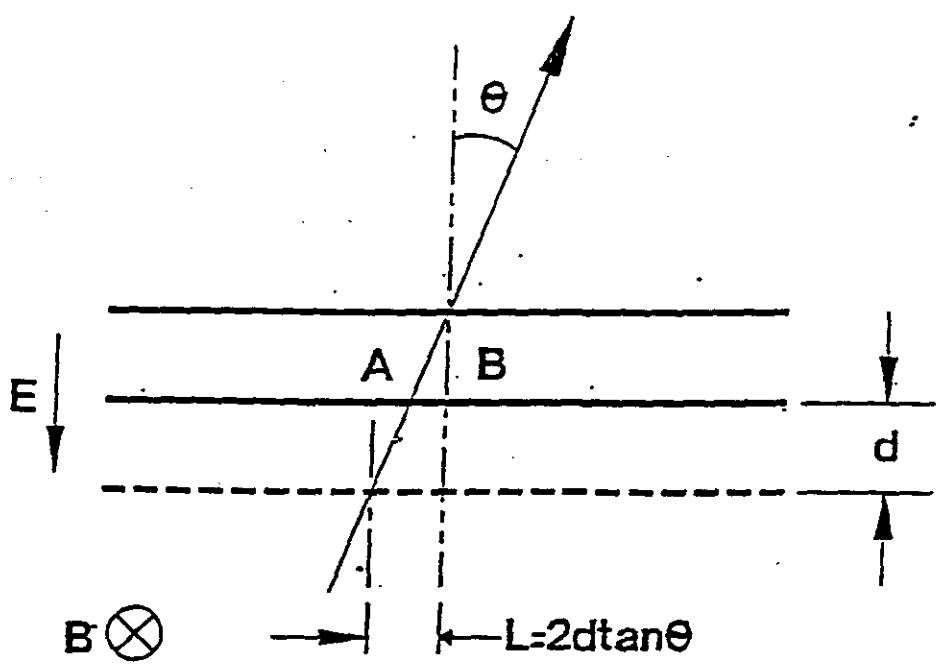

limits now be about 110 width

$$\sigma_L = \frac{2d\tan\theta}{\sqrt{12}\sqrt{n_c}}$$

n_c = number of primary clusters

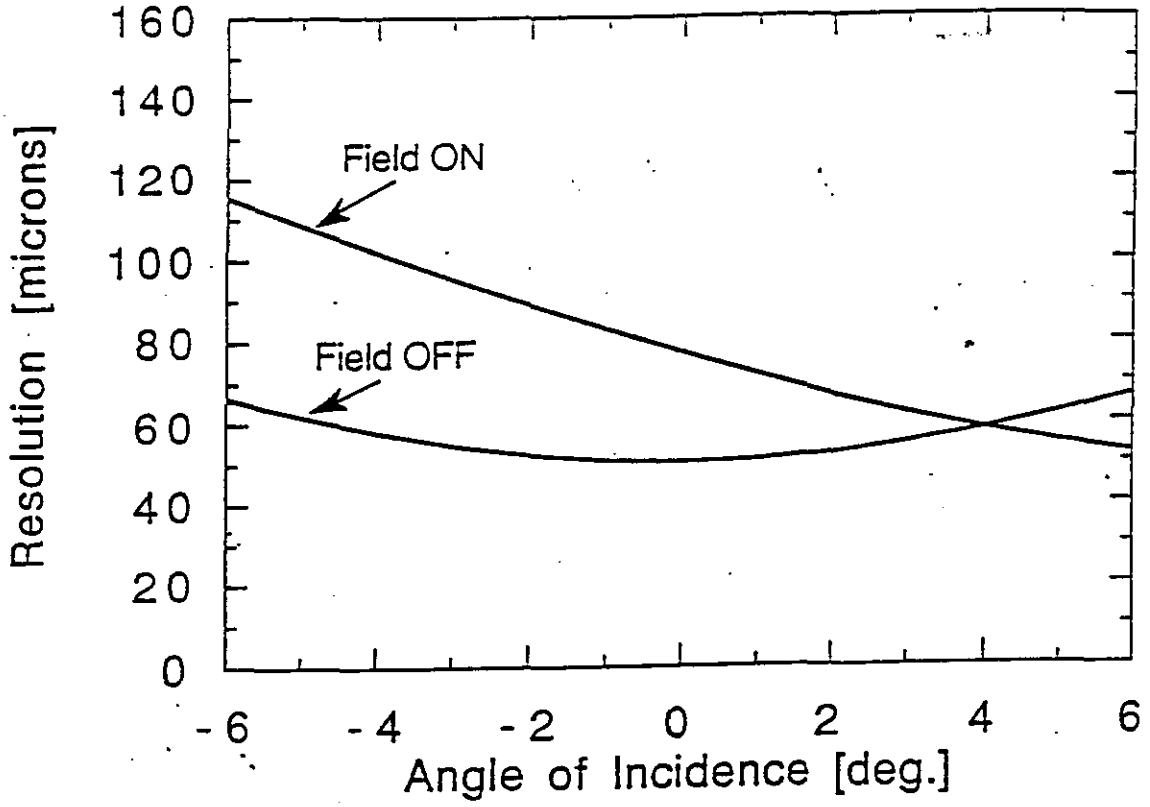

Figure 3: Resolution as a function of incident angle within a sector in a system with a 32-fold symmetry.

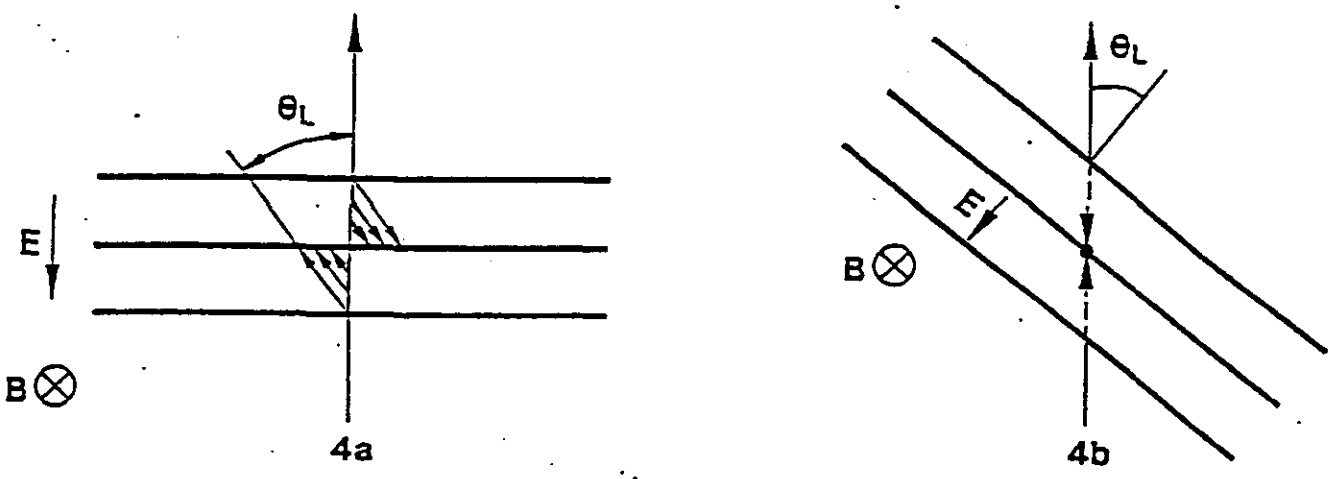

Figure 4: Normal incidence (4a) and compensation by tilting (4b)

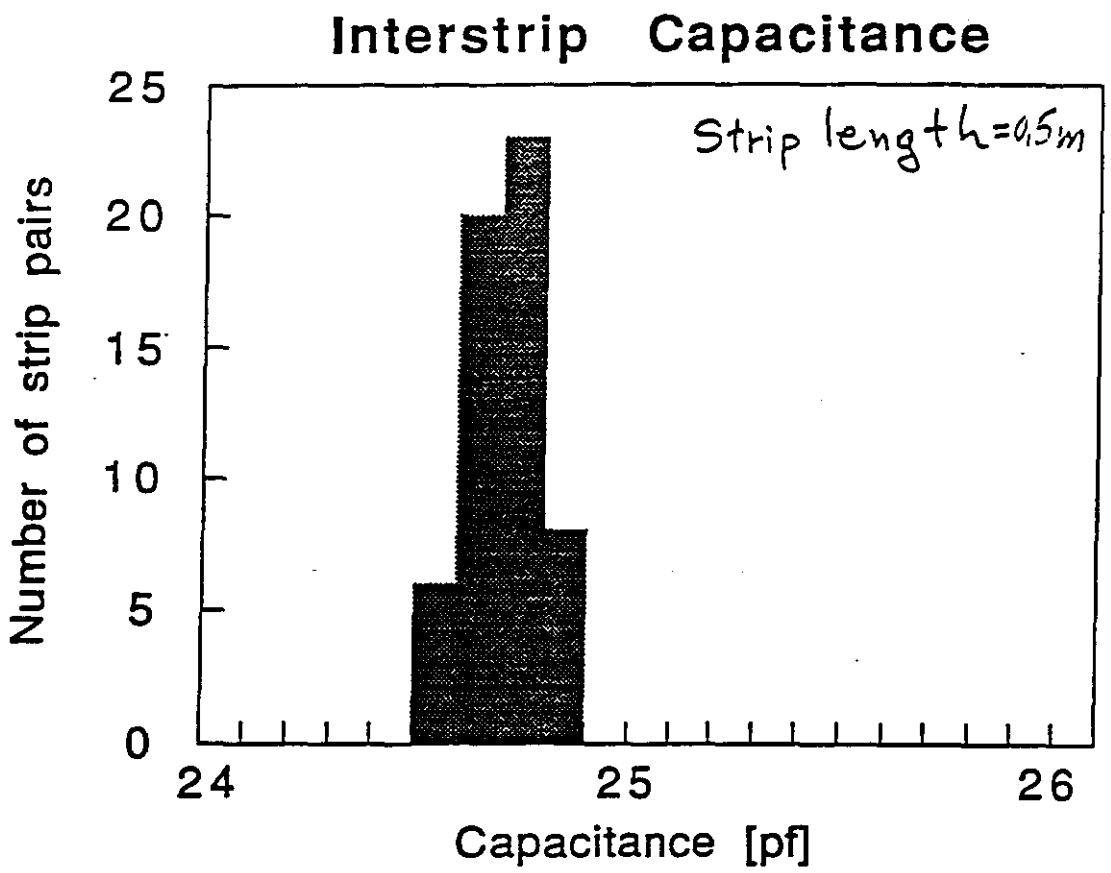
Interstrip Capacitance
Strip length=0.5m
Number of strip pairs
25
20
15
10
5
0
24
25
26
Capacitance [pf]

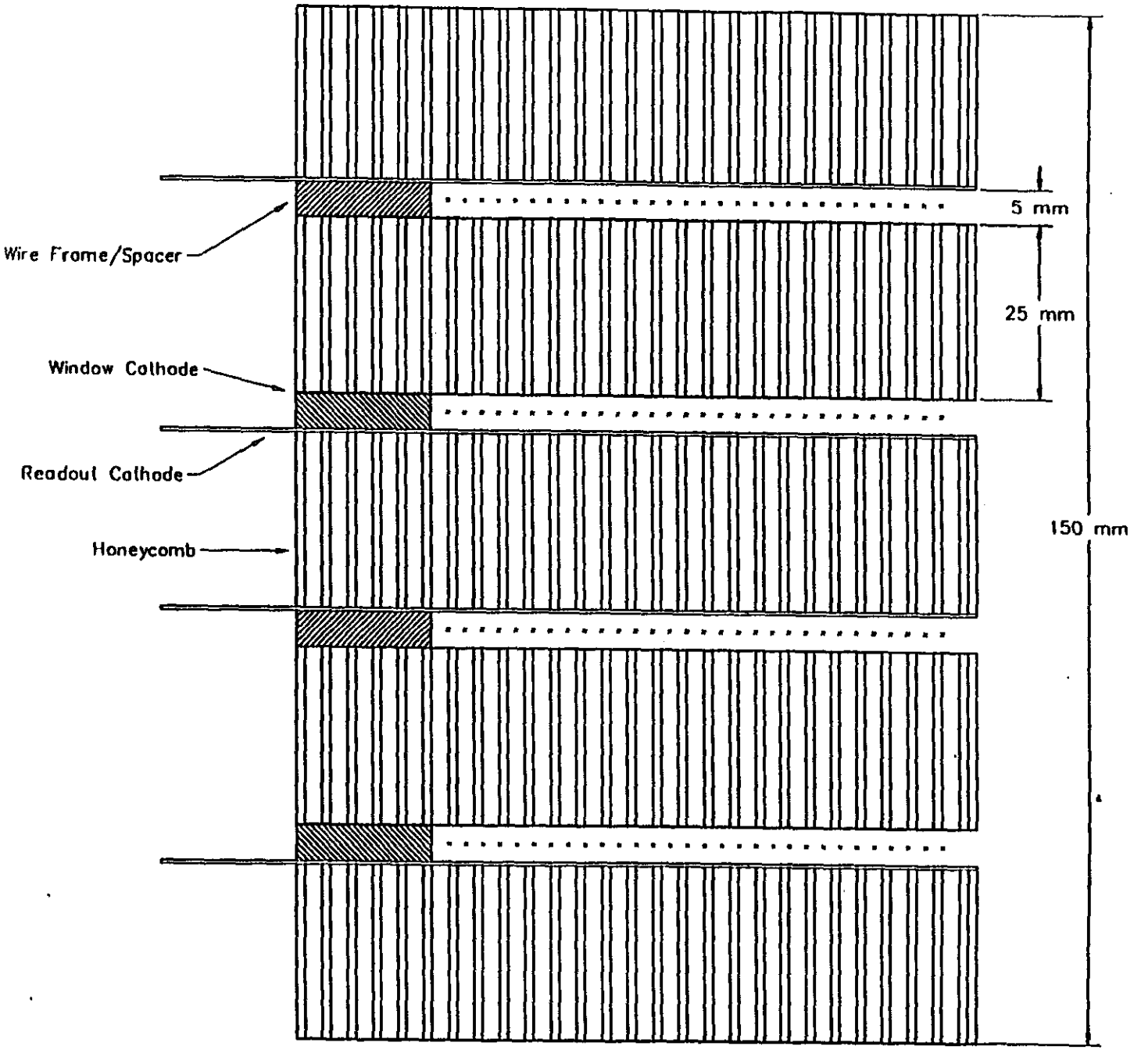
Wire Frame/Spacer
Window Cathode
Readout Cathode
Honeycomb
5 mm
25 mm
150 mm

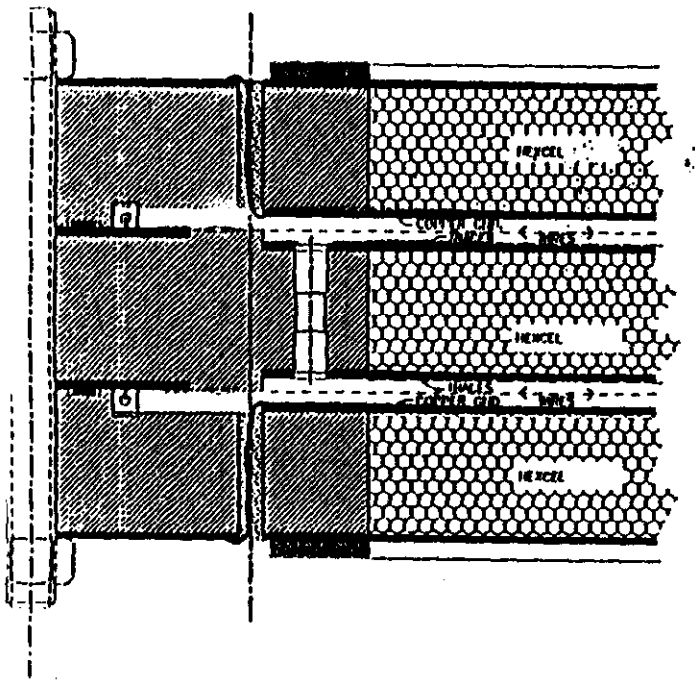
HEXCEL
HEXCEL
HEXCEL

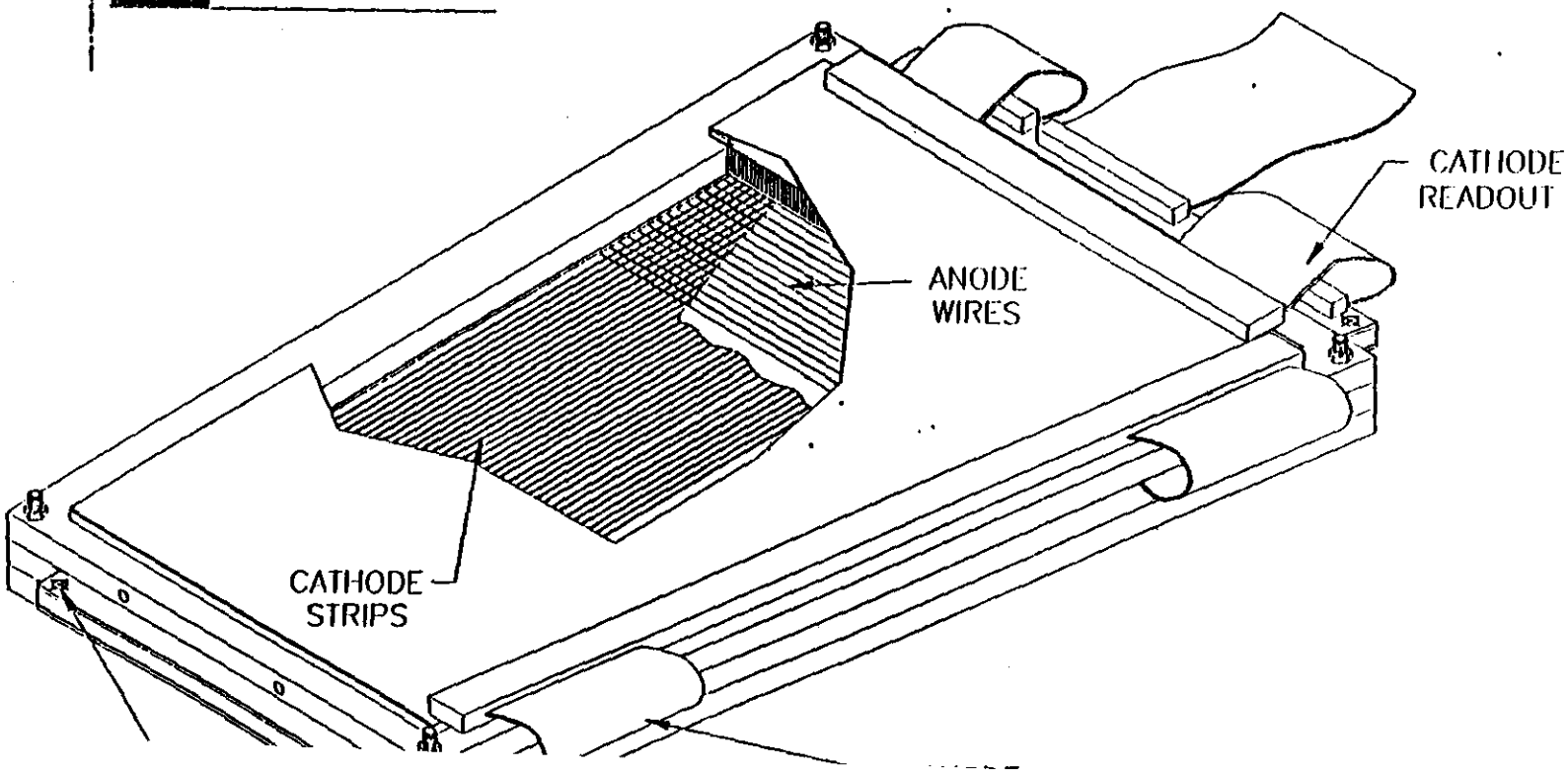
CATHODE
READOUT
ANODE
WIRES
CATHODE
STRIPS

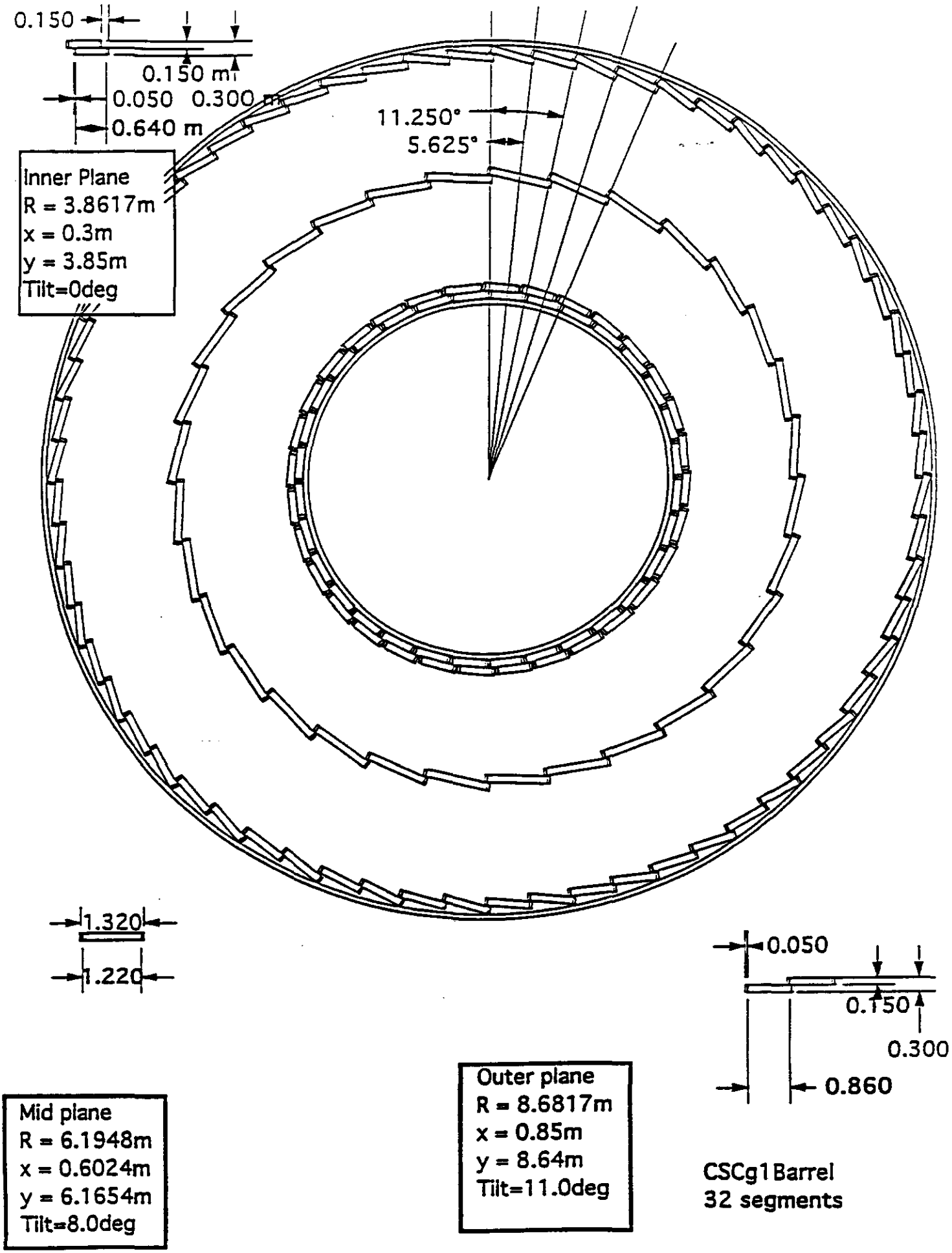
0.150
0.150 m
0.050
0.300 m
0.640 m
11.250°
5.625°
Inner Plane
R = 3.8617m
x = 0.3m
y = 3.85m
Tilt=0deg
1.320
1.220
0.050
0.150
0.300
0.860
Mid plane
R = 6.1948m
x = 0.6024m
y = 6.1654m
Tilt=8.0deg
Outer plane
R = 8.6817m
x = 0.85m
y = 8.64m
Tilt=11.0deg
CSCg1 Barrel
32 segments

CSCf2crzBarrellayout

Lengths of active areas

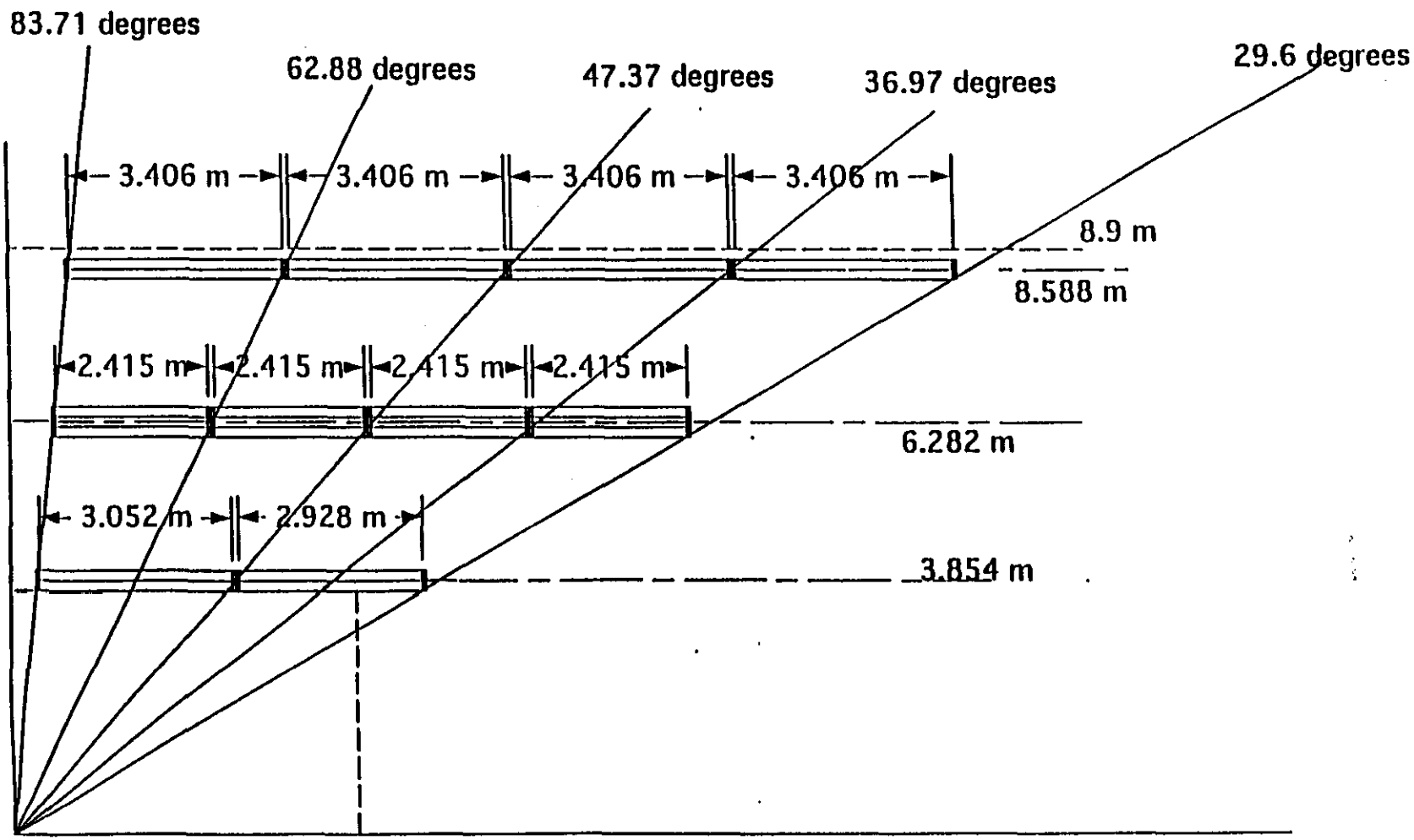

CSC	Barrel	Chambers
Length(m)	Width(m)	No/GEM
3.506	0.96	512
2.415	1.32	512
3.052	0.74	128
2.928	0.74	128
	Total	1280

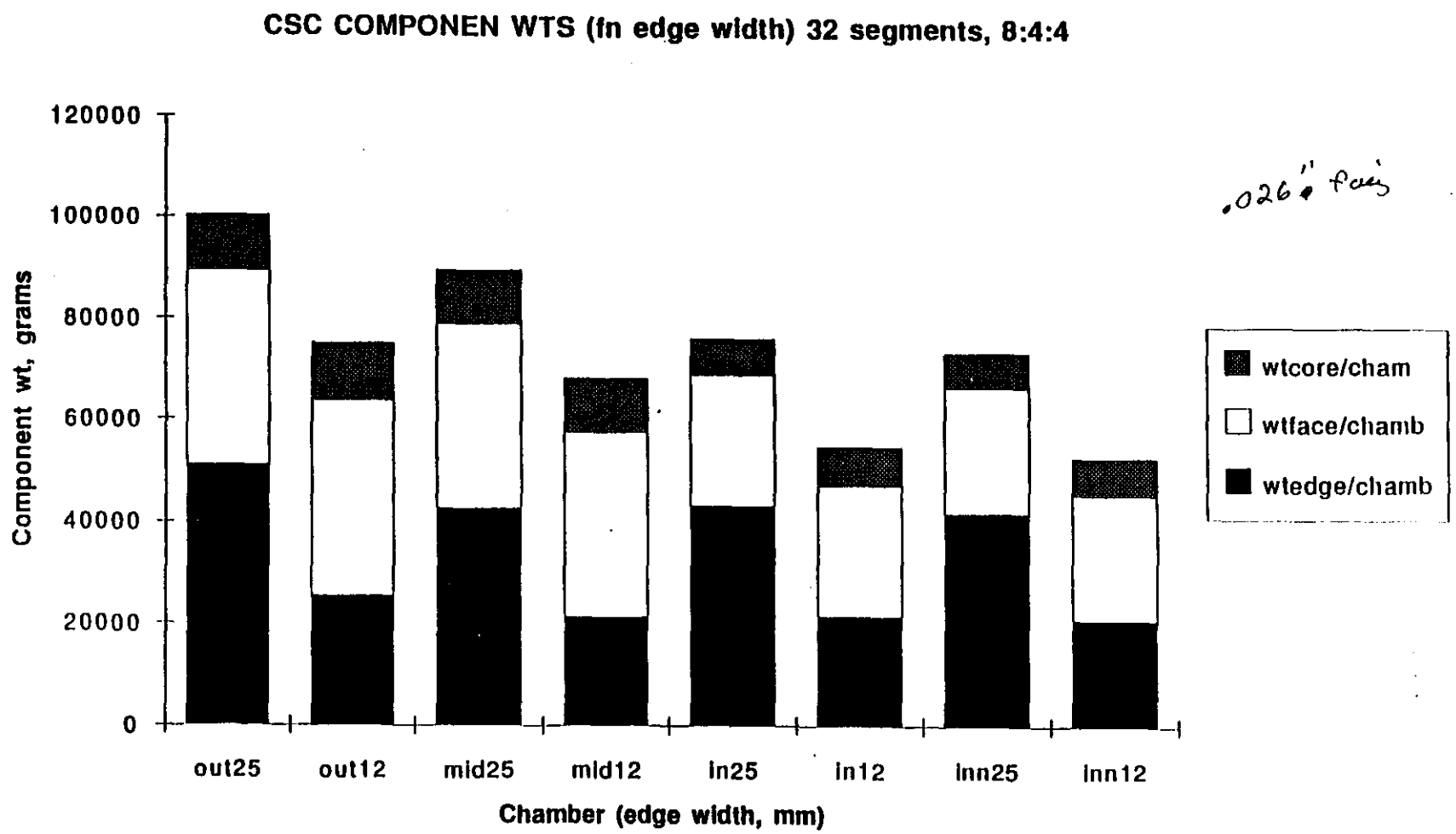
CSC COMPONEN WTS (fn edge width) 32 segments, 8:4:4
120000
100000
80000
60000
40000
20000
0
Component wt, grams
out25
out12
mid25
mid12
in25
in12
inn25
inn12
Chamber (edge width, mm)
wtcore/cham
wtface/chamb
wtedge/chamb
.026" face

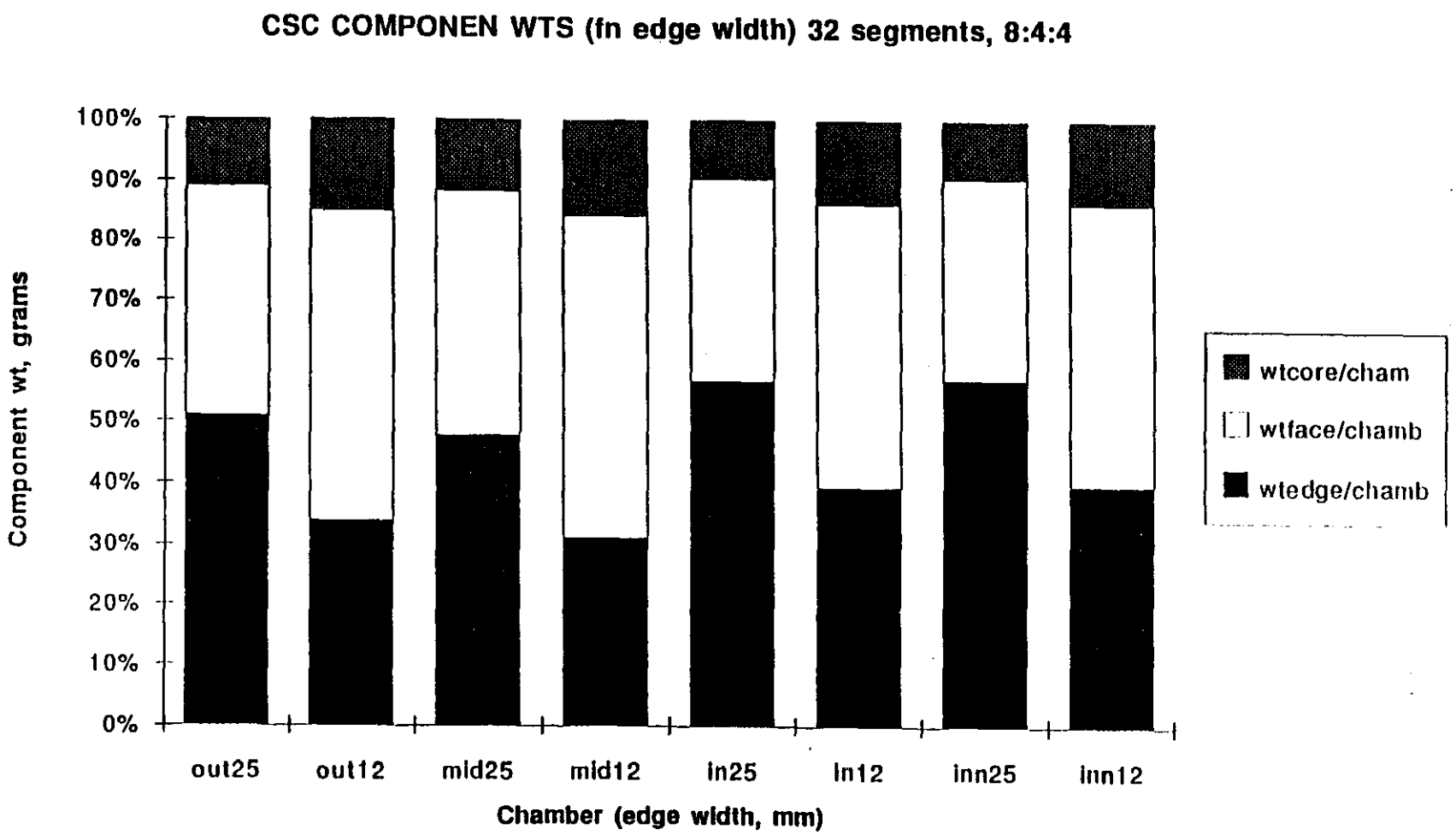
CSC COMPONEN WTS (fn edge width) 32 segments, 8:4:4
100%
90%
80%
70%
60%
50%
40%
30%
20%
10%
0%
Component wt, grams
out25
out12
mid25
mid12
in25
in12
inn25
inn12
Chamber (edge width, mm)
wtcore/cham
wtface/chamb
wtedge/chamb

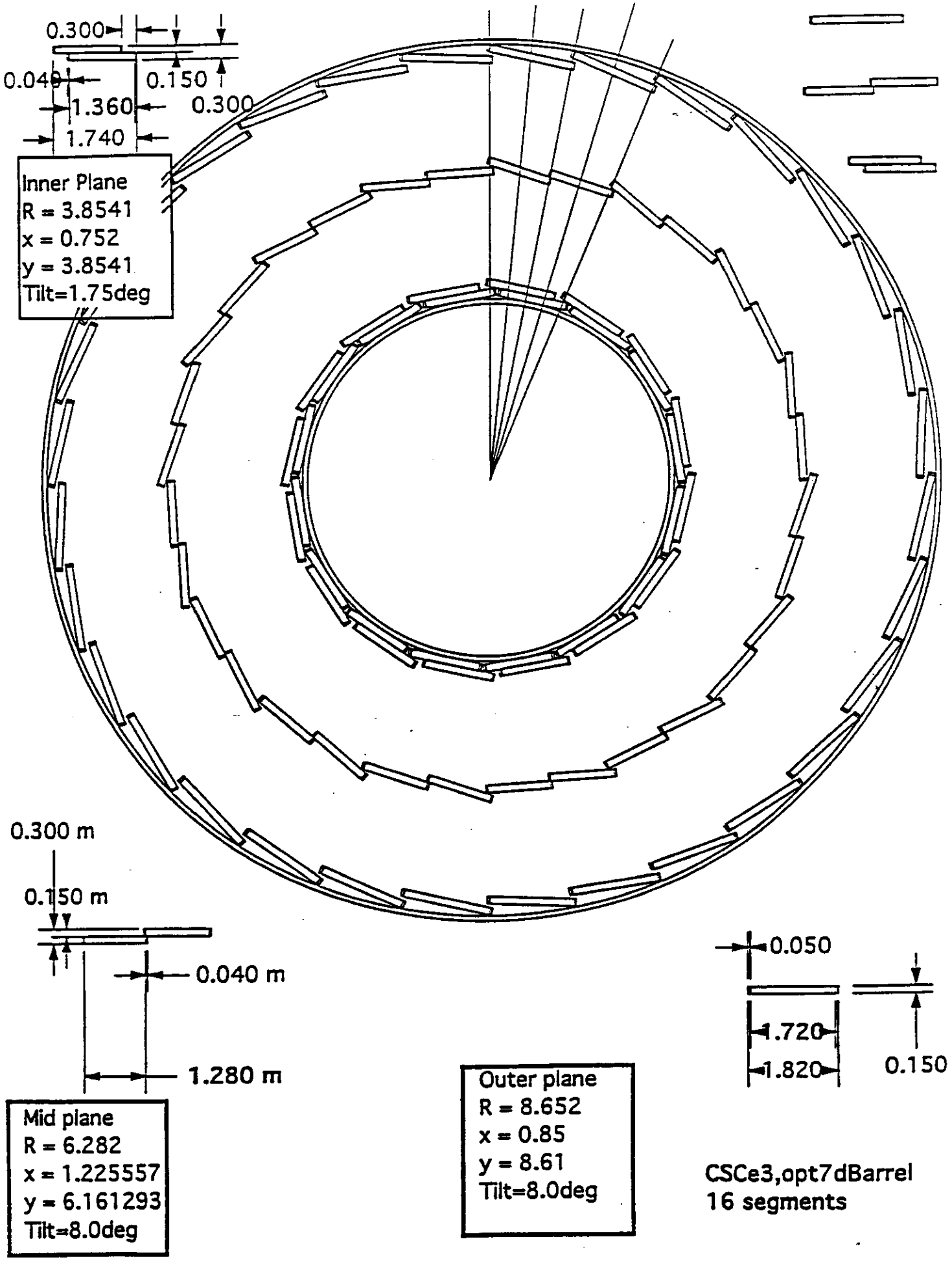
0.300
0.040
0.150
1.360
0.300
1.740
Inner Plane
R = 3.8541
x = 0.752
y = 3.8541
Tilt=1.75deg
0.300 m
0.150 m
0.040 m
1.280 m
Mid plane
R = 6.282
x = 1.225557
y = 6.161293
Tilt=8.0deg
Outer plane
R = 8.652
x = 0.85
y = 8.61
Tilt=8.0deg
0.050
1.720
1.820
0.150
CSCe3,opt7dBarrel
16 segments

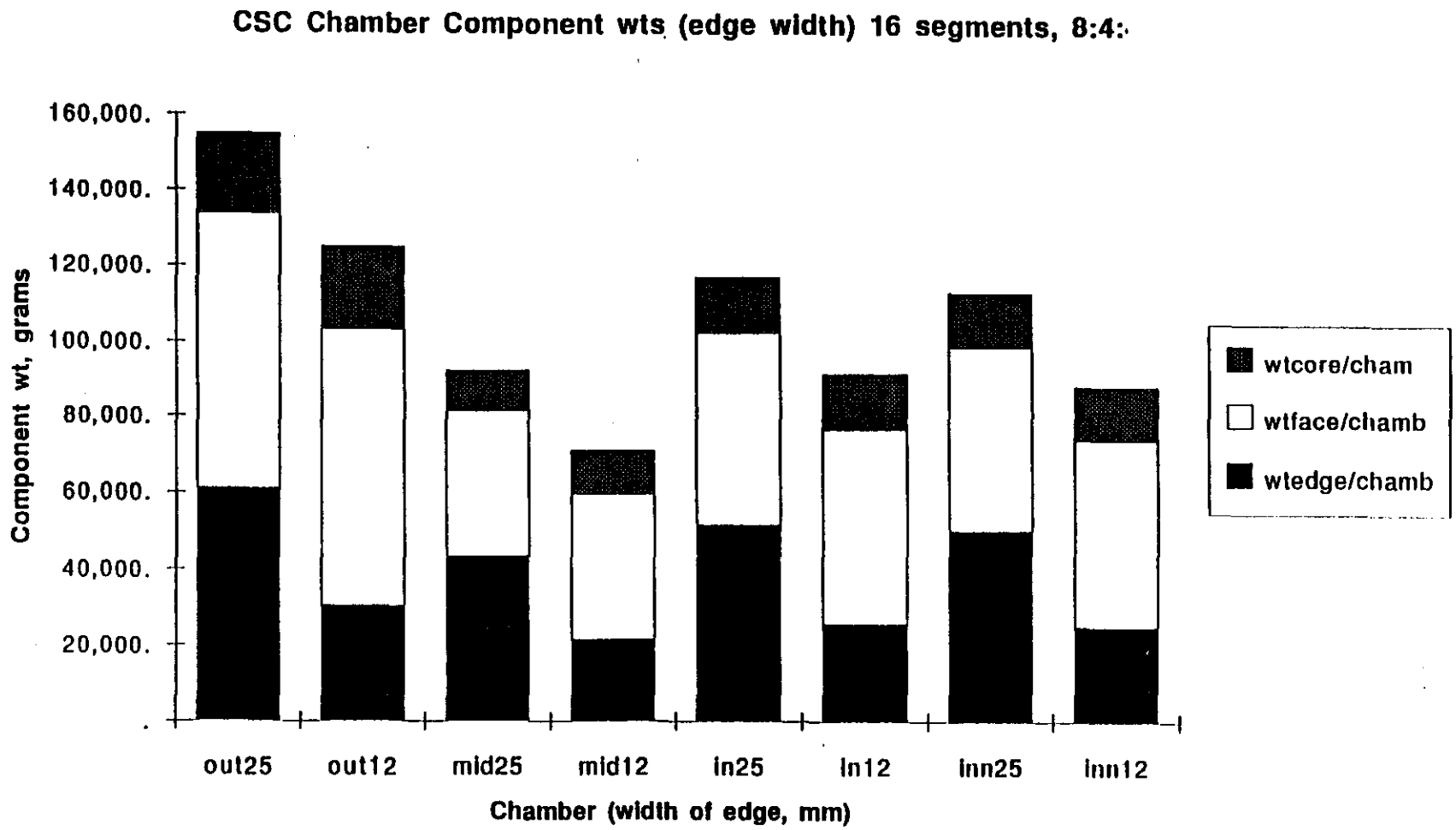
CSC Chamber Component wts (edge width) 16 segments, 8:4:
160,000.
140,000.
120,000.
100,000.
80,000.
60,000.
40,000.
20,000.
Component wt, grams
out25
out12
mid25
mid12
in25
in12
inn25
inn12
Chamber (width of edge, mm)
wtcore/cham
wtface/chamb
wtedge/chamb

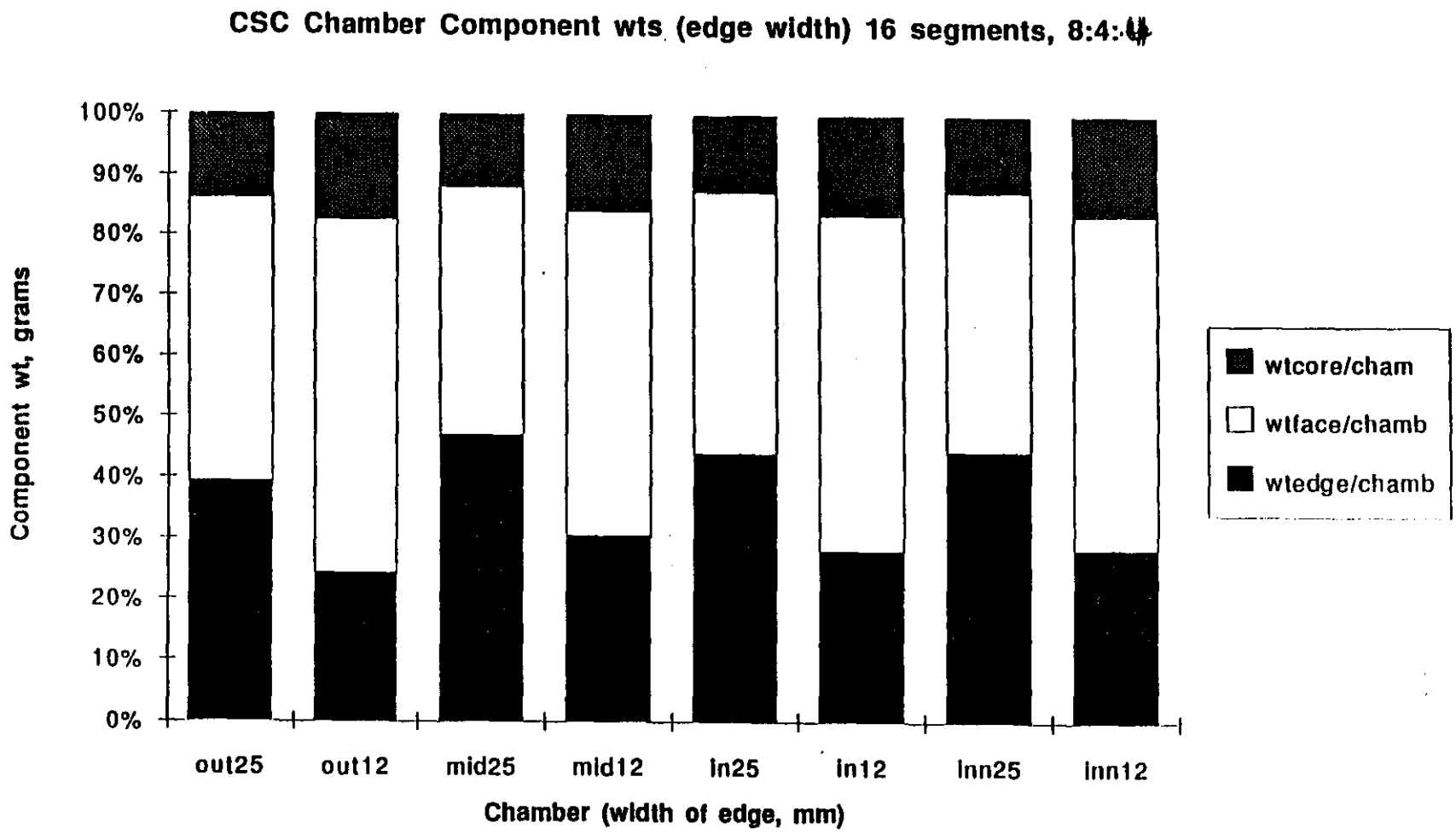
CSC Chamber Component wts (edge width) 16 segments, 8:4:4
100%
90%
80%
70%
60%
50%
40%
30%
20%
10%
0%
Component wt, grams
out25
out12
mid25
mid12
in25
in12
inn25
inn12
Chamber (width of edge, mm)
wtcore/cham
wtface/chamb
wtedge/chamb

option	segs	layer	nopki	noz	w	z	w of edge	t of edge	t of face	gm/cmsq	g10gm/cmsq	edge wt (gm)	g10/ch wt (gm)	edge/ch wt (gm)	total (gm)	wtedge/cha (gm)	wtface/cha (gm)	wtcore/cha (gm)	wt/chamb (gm)	comparison
e3opt7c	16	out	2	4	1.82	3.506	0.025	0.0241	0.0006509	0.2972488	4.826	90915	64258		39,724,418.3	60965	72681	21271	155891	155174
e3opt7c	16	mid	2	4	1.38	2.415	0.025	0.0241	0.0006509	0.2972488	4.826	46749	45787		23,689,147.3	43440	37960	10938	92847	92536
e3opt7c	16	in	2	1	1.46	3.052	0.025	0.0241	0.0006509	0.2972488	4.826	62910	54437		7,510,227.6	51647	50754	14719	117801	117347
e3opt7c	16	inn	2	1	1.46	2.928	0.025	0.0241	0.0006509	0.2972488	4.826	60311	52941		7,248,172.6	50228	48692	14111	113684	113253
															78,171,965.8					
e3opt7c	16	out	2	4	1.82	3.506	0.0125	0.0241	0.0006509	0.2972488	4.826	92866	32129		31,998,843.0	30482	72681	21727	125865	124995
e3opt7c	16	mid	2	4	1.38	2.415	0.0125	0.0241	0.0006509	0.2972488	4.826	48131	22893		18,182,297.9	21720	37960	11261	71450	71025
e3opt7c	16	in	2	1	1.46	3.052	0.0125	0.0241	0.0006509	0.2972488	4.826	64559	27219		5,873,746.1	25824	50754	15104	92363	91777
e3opt7c	16	inn	2	1	1.46	2.928	0.0125	0.0241	0.0006509	0.2972488	4.826	61914	26471		5,656,616.3	25114	48692	14486	88945	88385
															61,711,503.2					
g1	32	out	2	4	0.96	3.506	0.025	0.0241	0.0006509	0.2972488	4.826	46742	53882		51,519,520.8	51121	38337	10936	100908	100624
g1	32	mid	2	4	1.32	2.415	0.025	0.0241	0.0006509	0.2972488	4.826	44640	45063		45,927,860.1	42753	36310	10444	89994	89703
g1	32	in	2	1	0.74	3.052	0.025	0.0241	0.0006509	0.2972488	4.826	30786	45750		9,796,638.4	43406	25725	7203	76678	76536
g1	32	inn	2	1	0.74	2.928	0.025	0.0241	0.0006509	0.2972488	4.826	29514	44254		9,442,374.1	41986	24680	6905	73902	73769
															116,686,393.4					
g1	32	out	2	4	0.96	3.506	0.0125	0.0241	0.0006509	0.2972488	4.826	48373	26941		38,560,995.0	25560	38337	11318	75729	75314
g1	32	mid	2	4	1.32	2.415	0.0125	0.0241	0.0006509	0.2972488	4.826	46000	22531		35,088,065.2	21377	36310	10762	68936	68531
g1	32	in	2	1	0.74	3.052	0.0125	0.0241	0.0006509	0.2972488	4.826	32167	22875		7,045,387.5	21703	25725	7526	55298	55042
g1	32	inn	2	1	0.74	2.928	0.0125	0.0241	0.0006509	0.2972488	4.826	30649	22127		6,780,973.5	20993	24680	7218	53221	52976
															87,475,421.2					

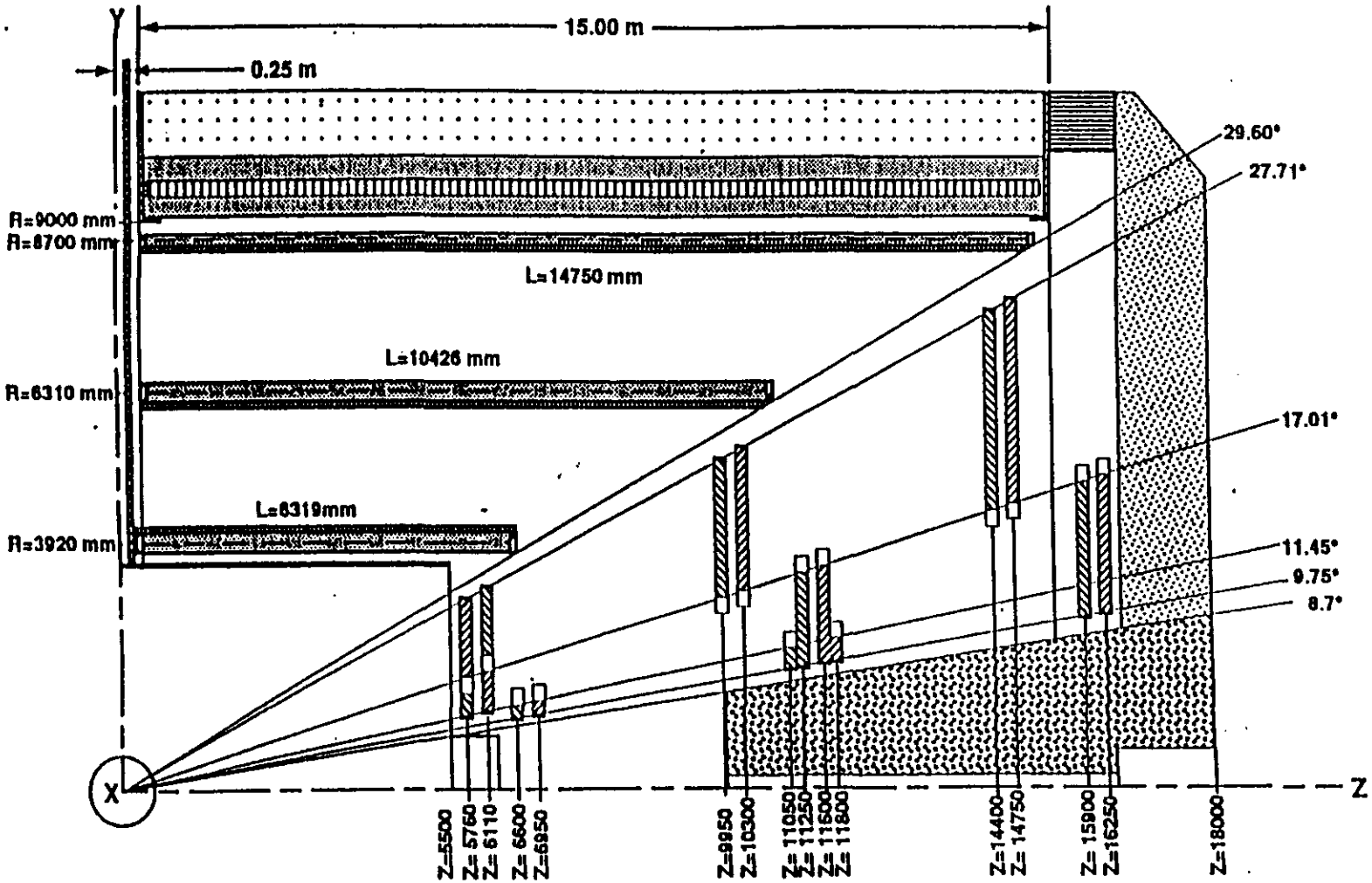

GEM MUON SYSTEM CHAMBER LAYOUT BASELINE

Draper Laboratory	
GEM Muon System Chamber Layout	
Drawn By: F. Nimblett	Rev (-)
Dwg. No: GMU0010	3/27/92
Approved by:	

Fig. 3.2 a

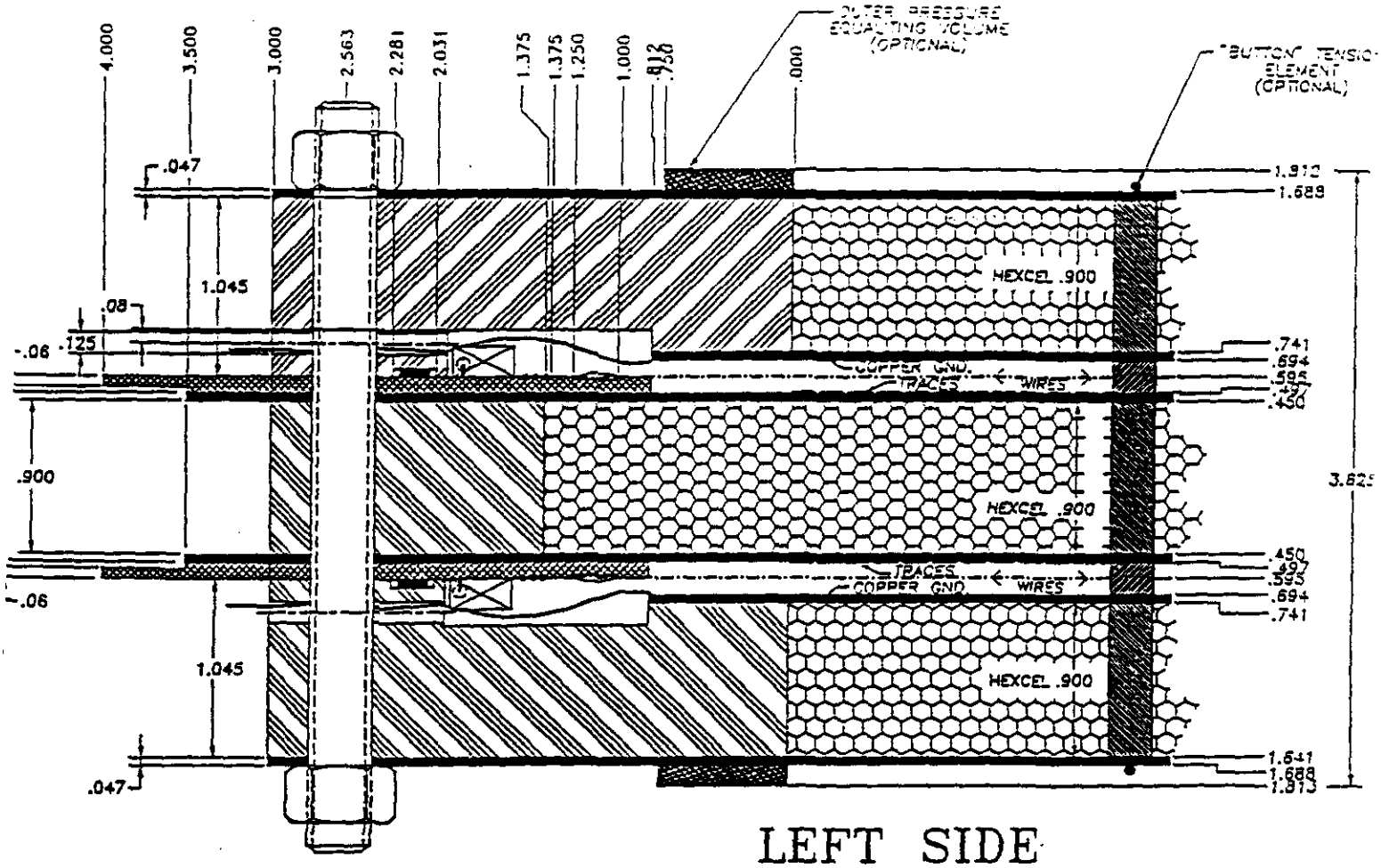

LEFT SIDE

HIGH VOLTAGE
CAPACITOR EVERY 10"
RESISTOR EVERY 1"

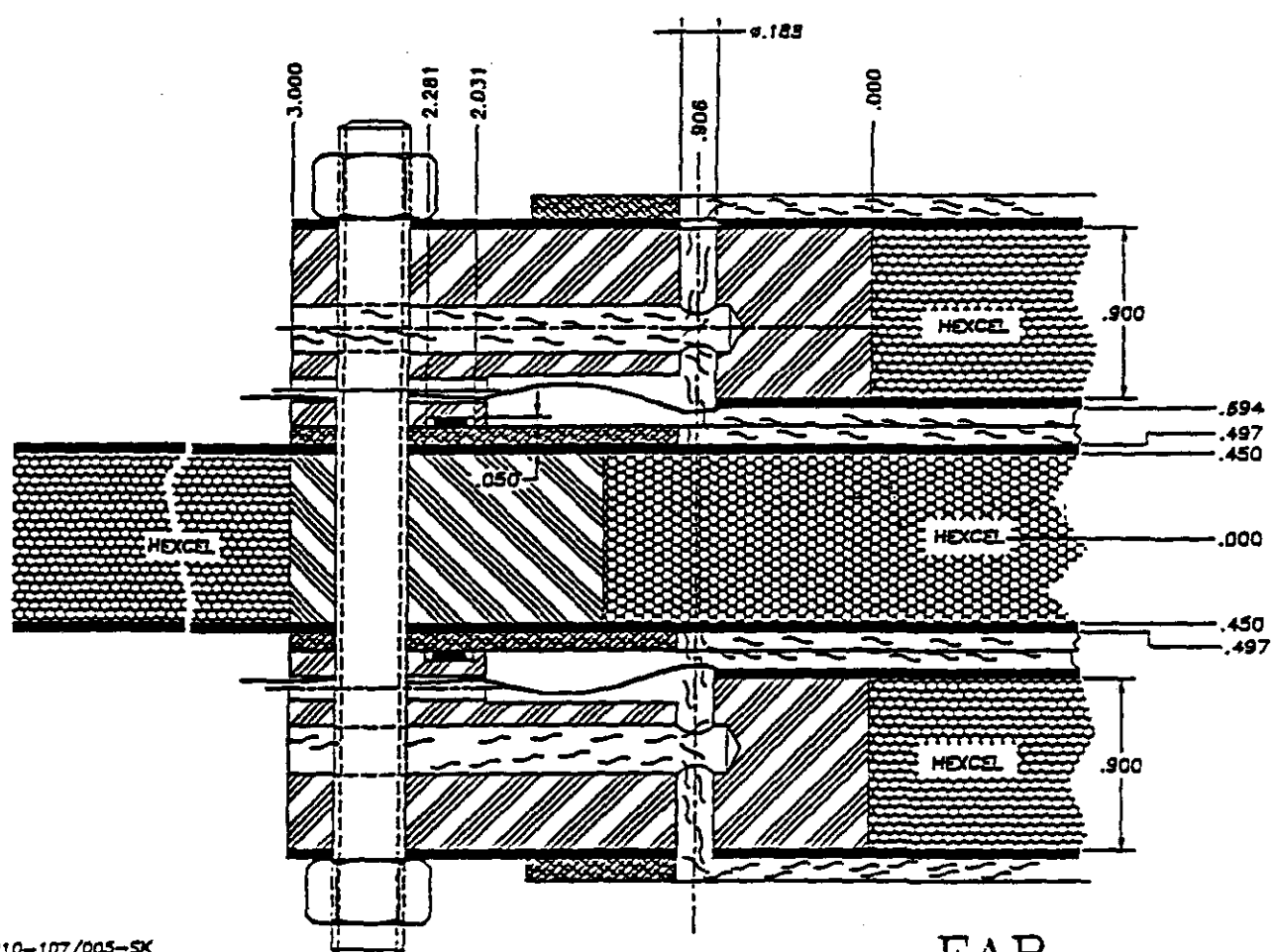

PLAN

FAR

P10-107/005-SK

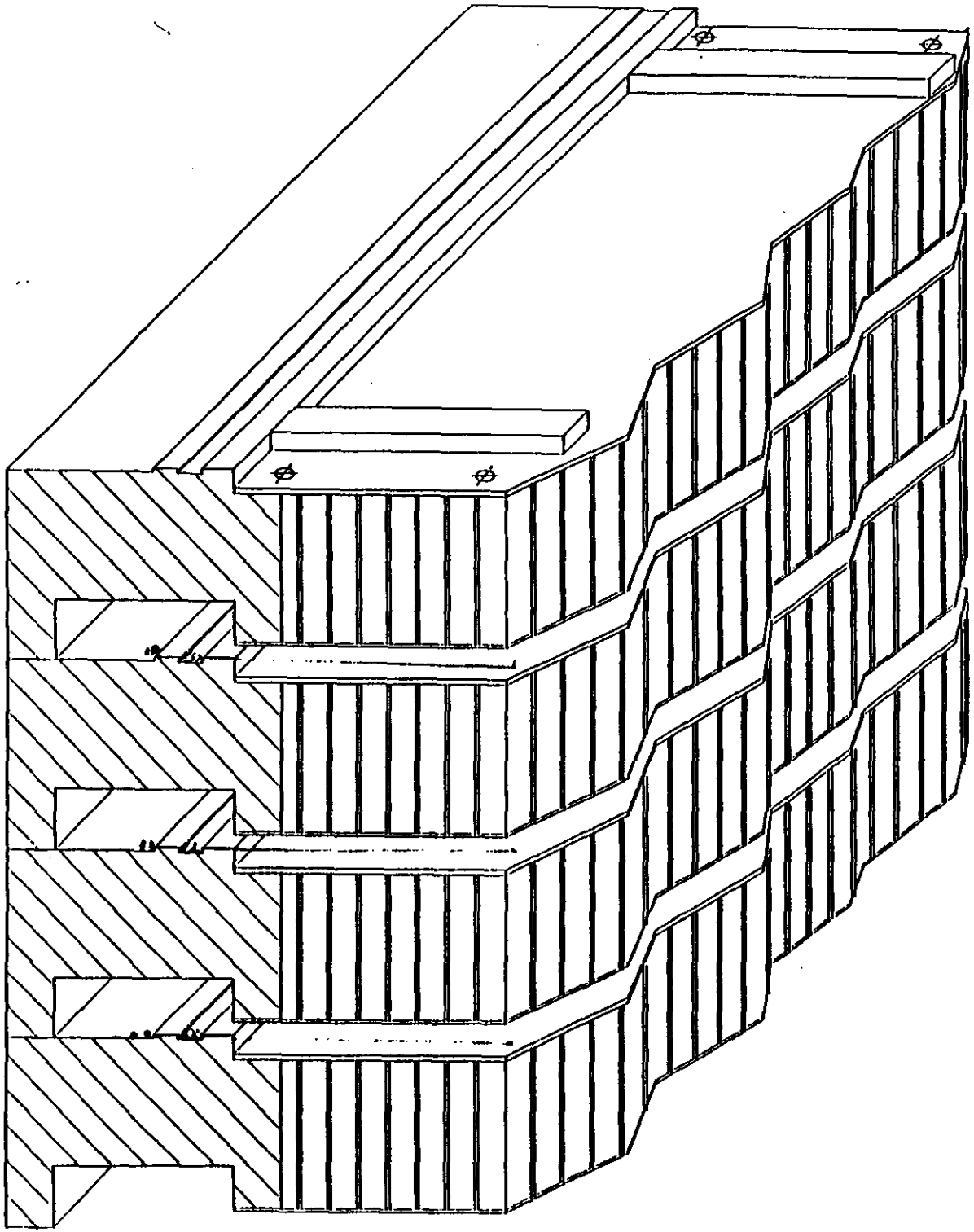

CSC Layout Specification

Open Magnet Geometry
Structure at 10.5° and 28.45°; active coverage 9.75° to 27.71°
module border (nonreadout) 10 cm; module thickness 20 cm; intermodule space 15 cm

F^2 S 19 March 92
rev1 FEN 20 March 92
(Z(3b)=6.95, Etal 2.46)

Rev 4 FEN 23 March 92
Add chambers to inner
middle region 8a & 8b

Nsectors= 16
wires ganged by 20 = 5.00 cm
Strip width at middle = 5.00 mm

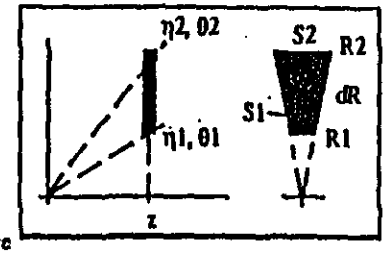

This Rev 4 Version adds four more layers to the inner group of middle chambers.

Nomenclature
Note: modules (a) occupy even-numbered sectors
modules (b) occupy odd-numbered sectors

Total channel counts:
*4/4/4 planes/module **
*Nsectors/2 * 2 ends*

	z m	η1	θ1 deg	η2	θ2 deg	R1 m	R2 m	dR m	S1 m	S2 m	area m^2	# strips /pl/sctr	strip occ /sec	# r-chans /pl/sctr	# strip chan	# r-chan
Inner modules																
1a)	5.76	2.30	11.45	1.90	17.01	1.17	1.76	0.60	0.46	0.69	0.33	114	98	12	7,315	763
1b)	6.11	2.30	11.45	1.90	17.01	1.24	1.87	0.63	0.48	0.73	0.38	121	104	13	7,759	809
2a)	6.11	1.90	17.01	1.40	27.71	1.87	3.21	1.34	0.73	1.25	1.30	198	36	27	12,681	1,714
2b)	5.76	1.90	17.01	1.40	27.71	1.76	3.02	1.26	0.69	1.18	1.16	187	34	25	11,954	1,616
3a)	6.60	2.46	9.75	2.30	11.45	1.13	1.34	0.20	0.44	0.52	0.10	96	103	4	6,169	260
3b)	6.95	2.46	9.75	2.30	11.45	1.19	1.41	0.21	0.47	0.55	0.11	102	108	4	6,497	274
Middle modules																
4a)	11.25	2.46	9.75	1.90	17.01	1.93	3.44	1.51	0.75	1.34	1.55	210	77	30	13,422	1,933
4b)	11.60	2.46	9.75	1.90	17.01	1.99	3.55	1.56	0.78	1.38	1.65	216	80	31	13,839	1,993
5a)	9.95	1.90	17.01	1.40	27.71	3.04	5.23	2.18	1.19	2.04	3.45	323	13	44	20,650	2,791
5b)	10.30	1.90	17.01	1.40	27.71	3.15	5.41	2.26	1.23	2.11	3.70	334	14	45	21,377	2,889
8a)	11.05	2.46	9.75	2.30	11.45	1.90	2.24	0.34	0.74	0.87	0.27	161	39	7	10,329	435
8b)	11.80	2.46	9.75	2.30	11.45	2.03	2.39	0.36	0.79	0.93	0.31	172	41	7	11,030	465
Outer modules																
6a)	15.90	2.46	9.75	1.90	17.01	2.73	4.87	2.13	1.07	1.90	3.10	296	36	43	18,969	2,731
6b)	16.25	2.46	9.75	1.90	17.01	2.79	4.97	2.18	1.09	1.94	3.24	303	37	44	19,387	2,791
7a)	14.40	1.90	17.01	1.40	27.71	4.41	7.56	3.16	1.72	2.95	7.23	467	6	63	29,886	4,039
7b)	14.75	1.90	17.01	1.40	27.71	4.51	7.75	3.23	1.76	3.02	7.58	478	7	65	30,612	4,137

total area of strip cathodes (m^2)	2269
total volume of chambers (m^3)	11.3
Total number of modules	224

Total channels=> 241,876 | 29,640

Z Alignment Requirements for CSCs

JSW 14 May 1992

A shift in the z position of a chamber by dz leads to a shift in the apparent transverse position by $dy = dz \tan(\alpha) = dz * S/2Z$ in the worst case.

For the error in transverse position dy to be small compared to our 75 micron resolution goal, the z position errors should be small compared to 75 microns/(S2/2z). Roughly speaking, z errors should be smaller than 350 microns.

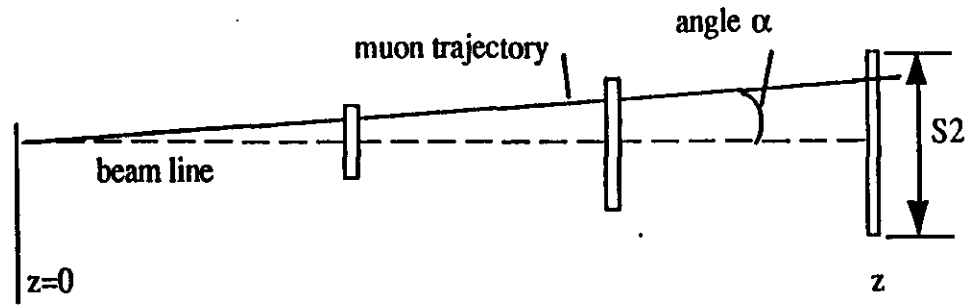

"Top View" of a sector

	z	n1	θ1	n2	θ2	R1	R2	dR	S1	S2	S1/2z	S2/2z	75 microns/(S2/2z)
	m		deg		deg	m	m	m	m	m			
Inner modules													
1a)	5.76	2.30	11.45	1.90	17.01	1.17	1.76	0.60	0.46	0.69	0.040	0.060	1256
1b)	6.11	2.30	11.45	1.90	17.01	1.24	1.87	0.63	0.48	0.73	0.040	0.060	1256
2a)	6.11	1.90	17.01	1.40	27.71	1.87	3.21	1.34	0.73	1.25	0.060	0.102	732
2b)	5.76	1.90	17.01	1.40	27.71	1.76	3.02	1.26	0.69	1.18	0.060	0.102	732
3a)	6.60	2.46	9.75	2.30	11.45	1.13	1.34	0.20	0.44	0.52	0.034	0.040	1898
3b)	6.95	2.46	9.75	2.30	11.45	1.19	1.41	0.21	0.47	0.55	0.034	0.040	1898
Middle modules													
4a)	11.25	2.46	9.75	1.90	17.01	1.93	3.44	1.51	0.75	1.34	0.034	0.060	1256
4b)	11.60	2.46	9.75	1.90	17.01	1.99	3.55	1.56	0.78	1.38	0.034	0.060	1256
5a)	9.95	1.90	17.01	1.40	27.71	3.04	5.23	2.18	1.19	2.04	0.060	0.102	732
5b)	10.30	1.90	17.01	1.40	27.71	3.15	5.41	2.26	1.23	2.11	0.060	0.102	732
8a)	11.05	2.46	9.75	2.30	11.45	1.90	2.24	0.34	0.74	0.87	0.034	0.040	1898
8b)	11.80	2.46	9.75	2.30	11.45	2.03	2.39	0.36	0.79	0.93	0.034	0.040	1898
Outer modules													
6a)	15.90	2.46	9.75	1.90	17.01	2.73	4.87	2.13	1.07	1.90	0.034	0.060	1256
6b)	16.25	2.46	9.75	1.90	17.01	2.79	4.97	2.18	1.09	1.94	0.034	0.060	1256
7a)	14.40	1.90	17.01	1.40	27.71	4.41	7.56	3.16	1.72	2.95	0.060	0.102	732

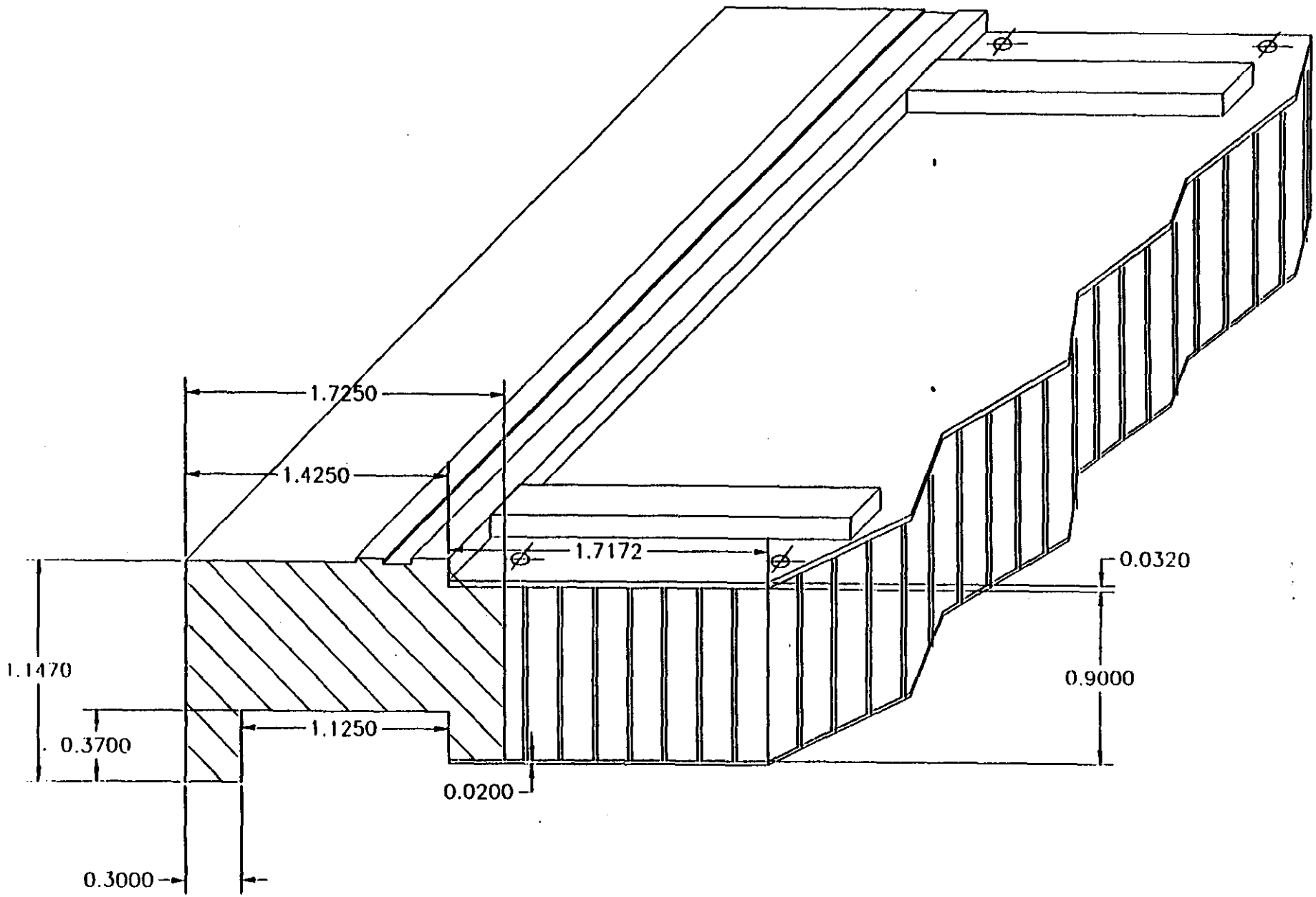
1.7250
1.4250
1.7172
0.0320
1.1470
0.9000
1.1250
0.3700
0.0200
0.3000

M.C. GILL CORPORATION
HIGH PERFORMANCE COMPOSITE SHEETS AND PANELS
SINCE 1945

September 9, 1992

SSC Laboratory
MS 2005
2550 Beckleymeade
Dallas, TX 75237

Attention: Mr. Coleman Johnson
Mr. V. A. Polychronakos

Dear Messrs. Johnson and Plychronakos:

The M. C. Gill Corporation is very interested in working with G.E.M. in developing the panels, for which a final configuration has not been defined, for the Super Collider project.

Our proposal to you would be to work with you in developing a plan to define a final configuration of the panel and the process by which that panel would be manufactured.

Until the panel definition leaves its preliminary stage, we propose working with you on a cost plus basis which would allow us to recover our cost of labor, material and a normal mark up of overhead and profit via a mutually agreed upon developmental plan.

The M. C. Gill Corporation is pleased to submit the following ROM:

1408/Ea Gillfab 5050-1.0X72X138CC-2 1.00X 72 X 138 .020/.020 3/16-1.8#
Unit Price: $2,600.00/Ea

1408/Ea Gillfab 5050-1.0X55X95CC-2 1.00 X 55 X 95 .020/.020 3/16-1.8#
Unit Price: $1,675.00/Ea

352/Ea Gillfab 5050-1.0X58X121CC-2 1.00 X 55 X 121 .020/.020 3/16-1.8#
Unit Price: $1,975.00/Ea

352/Ea Gillfab 5050-1.0X58X116CC-2 1.00 X 58 X 116 .020/.020 3/16-1.8#
Unit Price: $2,010.00/Ea

Above unit price includes 2" epoxy close out.

F.O.B: El Monte, CA
Terms: Net 30 days
Delivery: Beginning 9/93, quarterly deliveries over 4 year period
Q.A. Certification: TBD

This is our bid#19745, valid for 30 days.

Best regards,

C. Walker

Cindy Walker
Sales Representative

PHONE (818) 443 6094 TELEX 67-7457 FAX (818) 350 8890
2006 BABY STREET EL MONTE CALIFORNIA USA 91733-1897

M.C. GILL CORPORATION
4056 Easy Street
El Monte, CA 91731 USA

Facsimile Transmission Form
Facsimile No. 818-350-5880

Date: September 10, 1992

TO: Coleman Johnson/V.A. Polychronakos

Ext.: Dep't.: Mail Stop:

Company: GEM Project Department - SSC Laboratory

City and State:

Facsimile No.: (214) 708-6088

From: Cindy Walker

Number of pages: Two (including this page)

Note: If all pages have not been properly received, please telephone us at 818/443-6094.

Transmitted by: CW Time:

Subject: ROM - Super Collider Project

MESSAGE: Gentlemen:

Please reference the following:

Best regards,

C Walker

Cindy Walker

Sales Representative

ENDCAP

CSC MATERIALS AND COSTS

component	unit	cost ($)	weight	units	
hexcel	m^2	108	1.80	Kg/m^2	Hexcel HRH-10-1/4-2.0
circuit bds	m^2	20	2.03	Kg/m^2	.047 in, rho = 1.7
copper, plain	m^2	5	0.16	Kg/m^2	1/2 oz/ft^2
copper, strip cathodes	m^2	1000	0.16	Kg/m^2	"
wires	m	0.32	0.0000136	Kg/m	30 mu dia W
Al sides	m	5	1.07	Kg/m	50 cm *1/32 in
frames, closeouts	m	84.15	0.64	Kg/m	G10 2.5cm *1.5cm (machined)
electronics	each		5	Kg	wild guess
subtotals:					
module area (4 gaps)	m^2	4770	31	Kg/m^2	
module peri(4 gaps)	m	426	4	Kg/m	

Costs NOT included:
EDIA
Electronics (including cables, cooling)
Installation
Alignment hardware
Gas system, plumbing

Labor Rates:	$/hr	hr/module
labor_a	25	100
labor_b	25	100

Cost Breakdown -- costs for one of each kind of chamber (one even sector + one odd sector)

total	hexcel	cir bds	plain Cu	strip cath	wire	Al sides	frames	labor.a	labor.b
7761	180	67	10	1336	174	12	982	2500	2500
8043	203	75	11	1503	196	12	1042	2500	2500
13869	703	260	39	5204	679	23	1960	2500	2500
12989	624	231	35	4625	604	22	1848	2500	2500
6092	52	19	3	384	50	7	577	2500	2500
6178	57	21	3	426	56	7	607	2500	2500
15395	838	311	47	6211	811	26	2153	2500	2500
15982	891	330	50	6603	862	26	2220	2500	2500
26489	1863	690	104	13801	1801	38	3192	2500	2500
27910	1996	739	111	14789	1930	39	3305	2500	2500
7401	145	54	8	1077	141	11	965	2500	2500
7667	166	61	9	1228	160	12	1031	2500	2500
24492	1675	620	93	12406	1619	36	3043	2500	2500
25291	1749	648	97	12958	1691	37	3110	2500	2500
47918	3902	1445	217	28906	3772	55	4620	2500	2500
49913	4094	1516	227	30328	3958	56	4733	2500	2500
303389	19141	7089	1063	141784	18504	421	35387	40000	40000
fractions	**0.063**	**0.023**	**0.004**	**0.467**	**0.061**	**0.001**	**0.117**	**0.132**	**0.132**

CSC Layout Specification

Open Magnet Geometry
Structure at 10.5° and 28.45°; active coverage 9.75° to 27.71°
module border (nonreadout) 10 cm; module thickness 20 cm; intermodule space 15 cm

4/30/92
SW

Nsectors= 16
wires ganged by 20 = 5.00 cm
Strip width at middle = 5.00 mm

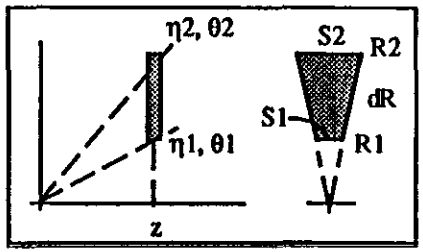

Nomenclature
Note: modules (a) occupy even-numbered sectors
modules (b) occupy odd-numbered sectors

Total channel counts:
4/4/4 planes/module *
Nsectors/2 * 2 ends

	z	η1	θ1	η2	θ2	R1	R2	dR	S1	S2	area	# strips	strip occ	# r-chans	# strip chan	# r-chan	wt/mod	cost/mod
	m		deg		deg	m	m	m	m	m	m^2	/pl/sctr	/sec	/pl/sctr			Kg	bucks
Inner modules																		
1a)	5.76	2.30	11.45	1.90	17.01	1.17	1.76	0.60	0.46	0.69	0.33	114	98	12	7315	763	25	7,761
1b)	6.11	2.30	11.45	1.90	17.01	1.24	1.87	0.63	0.48	0.73	0.38	121	104	13	7759	809	27	8,043
2a)	6.11	1.90	17.01	1.40	27.71	1.87	3.21	1.34	0.73	1.25	1.30	198	36	27	12681	1,714	65	13,869
2b)	5.76	1.90	17.01	1.40	27.71	1.76	3.02	1.26	0.69	1.18	1.16	187	34	25	11954	1,616	59	12,989
3a)	6.60	2.46	9.75	2.30	11.45	1.13	1.34	0.20	0.44	0.52	0.10	96	103	4	6169	260	14	6,092
3b)	6.95	2.46	9.75	2.30	11.45	1.19	1.41	0.21	0.47	0.55	0.11	102	108	4	6497	274	14	6,178
Middle modules																		
4a)	11.25	2.46	9.75	1.90	17.01	1.93	3.44	1.51	0.75	1.34	1.55	210	77	30	13422	1,933	75	15,395
4b)	11.60	2.46	9.75	1.90	17.01	1.99	3.55	1.56	0.78	1.38	1.65	216	80	31	13839	1,993	78	15,982
5a)	9.95	1.90	17.01	1.40	27.71	3.04	5.23	2.18	1.19	2.04	3.45	323	13	44	20650	2,791	144	26,489
5b)	10.30	1.90	17.01	1.40	27.71	3.15	5.41	2.26	1.23	2.11	3.70	334	14	45	21377	2,889	153	27,910
8a)	11.05	2.46	9.75	2.30	11.45	1.90	2.24	0.34	0.74	0.87	0.27	161	39	7	10329	435	23	7,401
8b)	11.80	2.46	9.75	2.30	11.45	2.03	2.39	0.36	0.79	0.93	0.31	172	41	7	11030	465	25	7,667
Outer modules																		
6a)	15.90	2.46	9.75	1.90	17.01	2.73	4.87	2.13	1.07	1.90	3.10	296	36	43	18969	2,731	132	24,492
6b)	16.25	2.46	9.75	1.90	17.01	2.79	4.97	2.18	1.09	1.94	3.24	303	37	44	19387	2,791	137	25,291
7a)	14.40	1.90	17.01	1.40	27.71	4.41	7.56	3.16	1.72	2.95	7.23	467	6	63	29886	4,039	275	47,918
7b)	14.75	1.90	17.01	1.40	27.71	4.51	7.75	3.23	1.76	3.02	7.58	478	7	65	30612	4,137	287	49,913
													Total =>		241876	29,640	24,536	4,854,227

total area of strip cathodes (m^2) 2269
total volume of chambers (m^3) 11.3
Total number of modules 256

Strip Readout Block Diagram

- Long Integration time 1μsec.
- No analog pipelines.
- Precision measurement does not require 60 MHz Clock.
- Could be implemented with current technology.

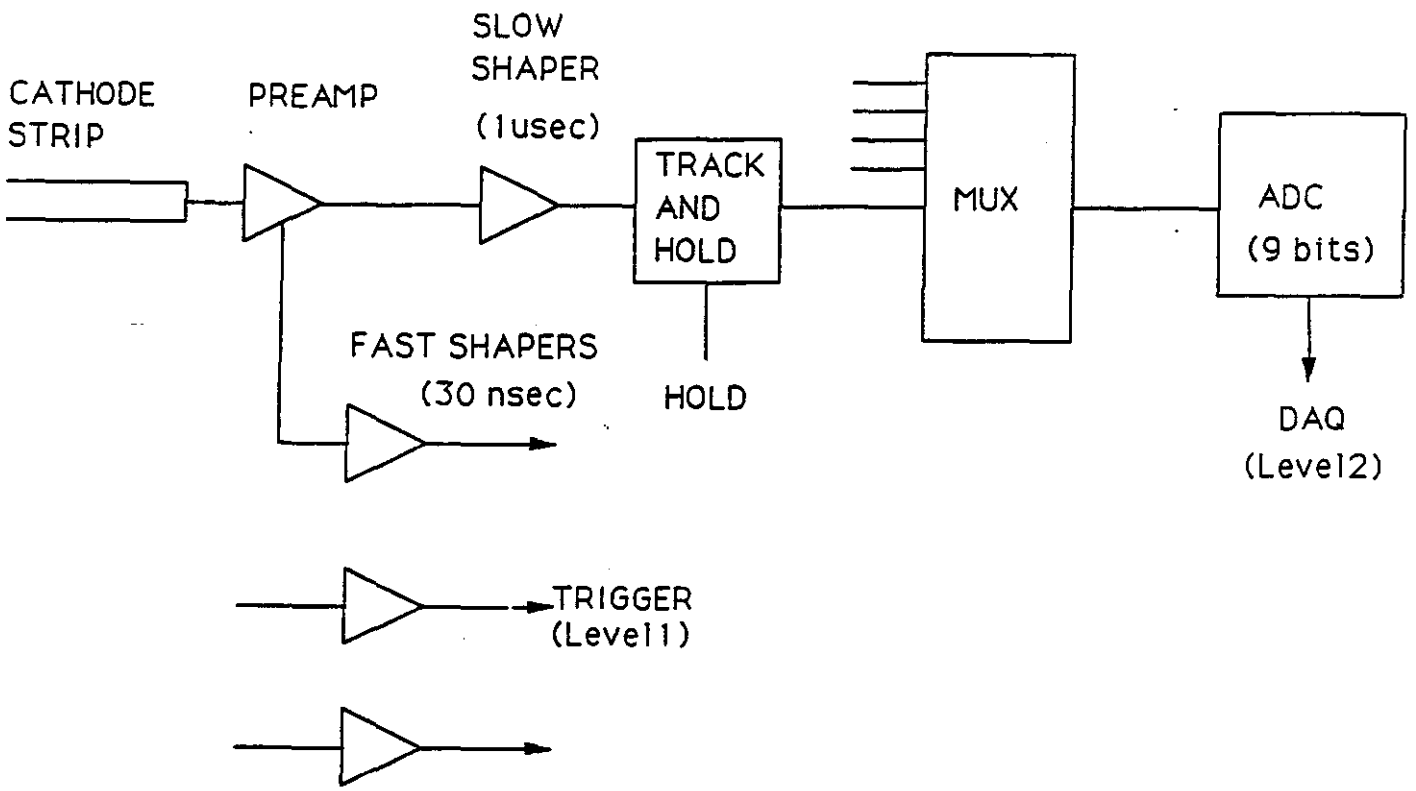

Barrel

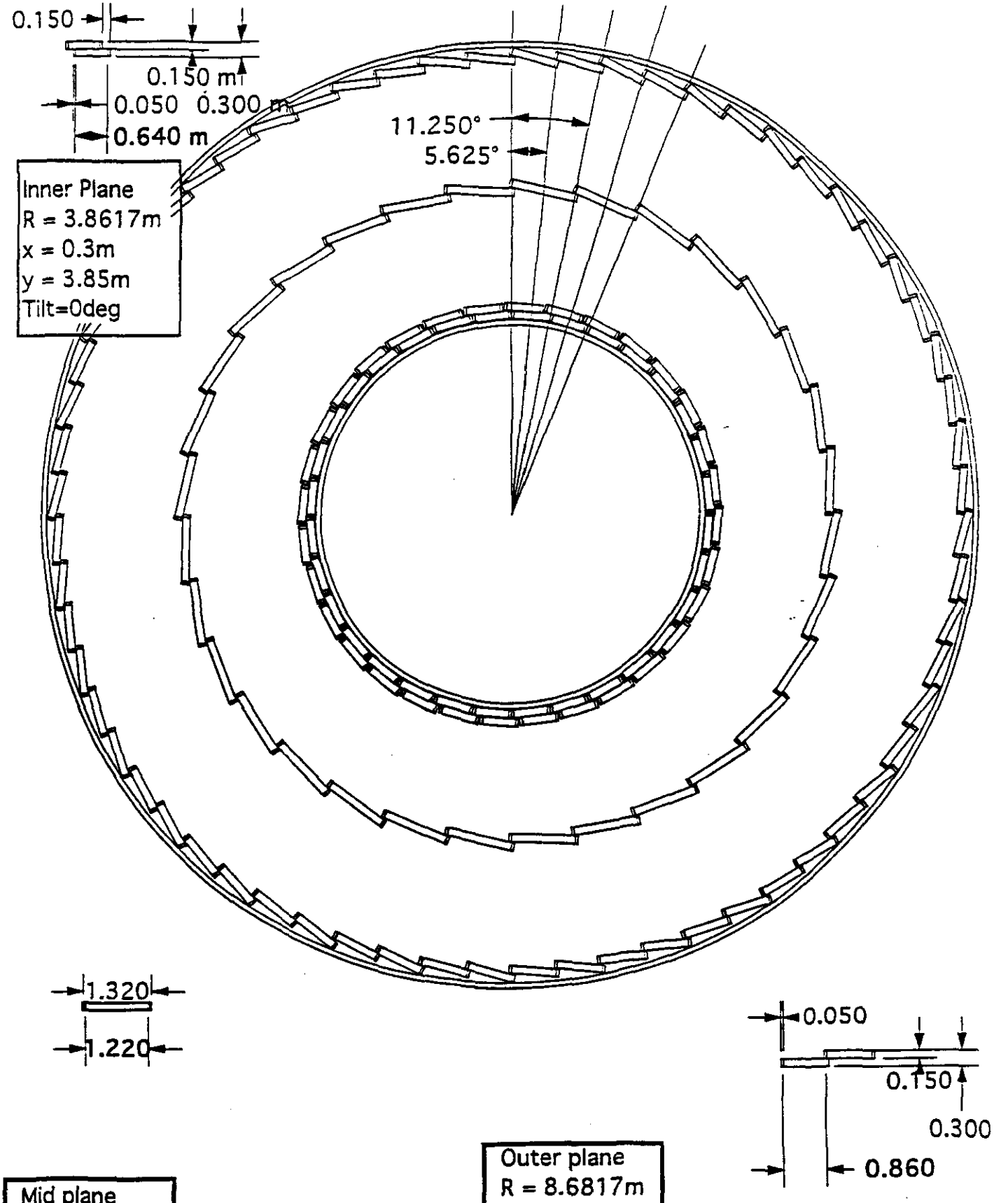

CSCg1 Barrel
32 segments

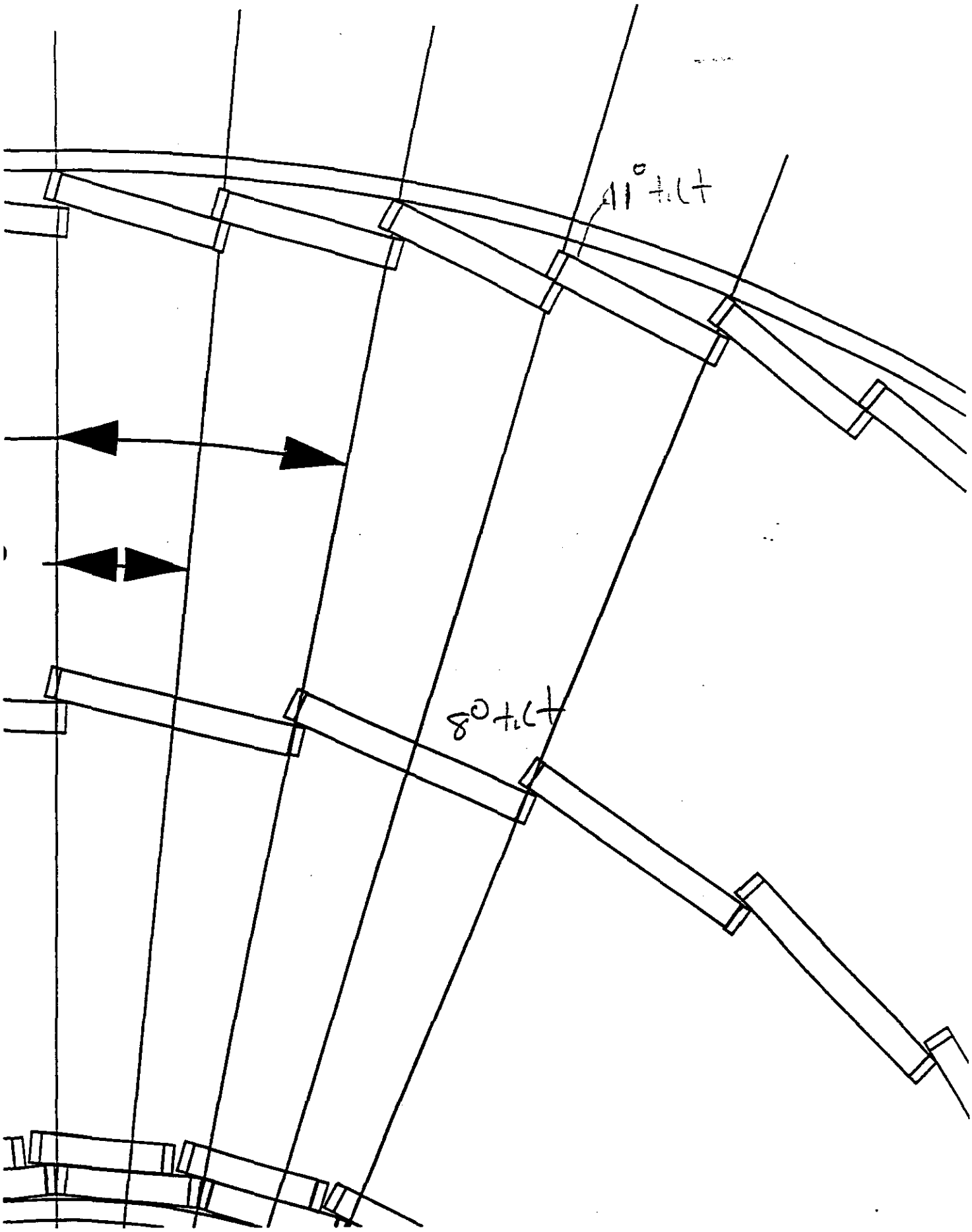
11° tilt
8° tilt

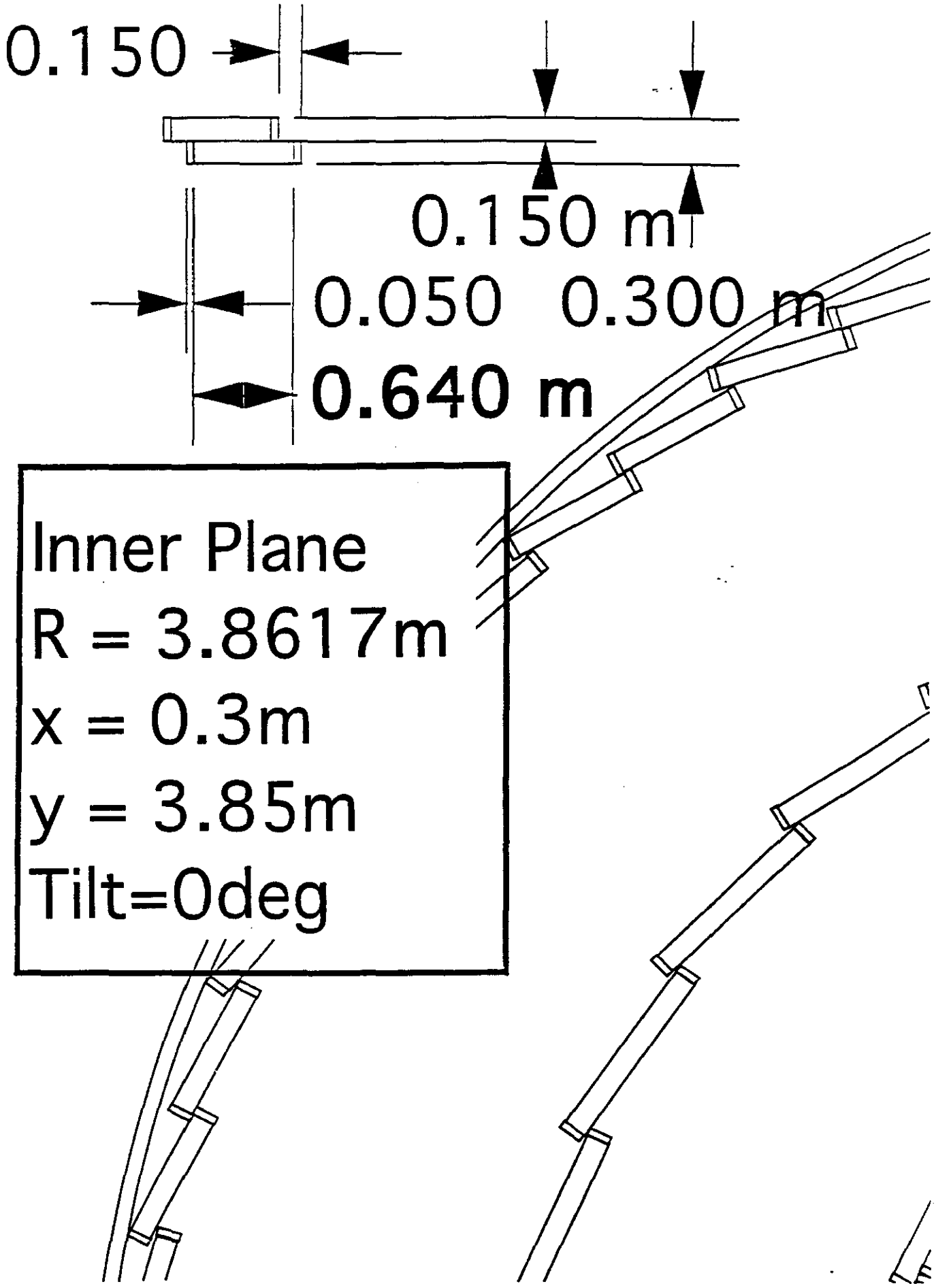
0.150
0.150 m
0.050
0.300 m
0.640 m
Inner Plane
R = 3.8617m
x = 0.3m
y = 3.85m
Tilt=0deg

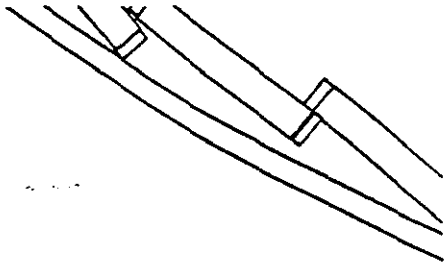

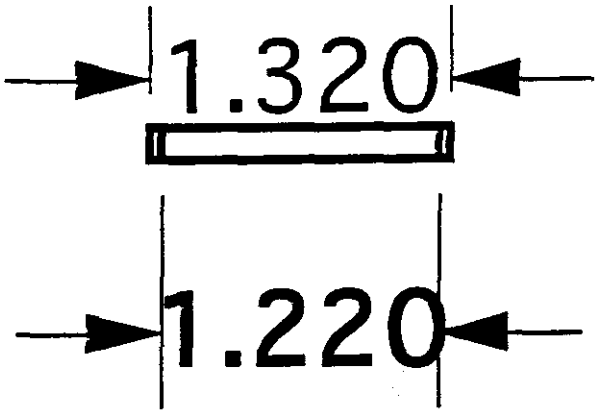

Mid plane
R = 6.1948m
x = 0.6024m
y = 6.1654m
Tilt=8.0deg

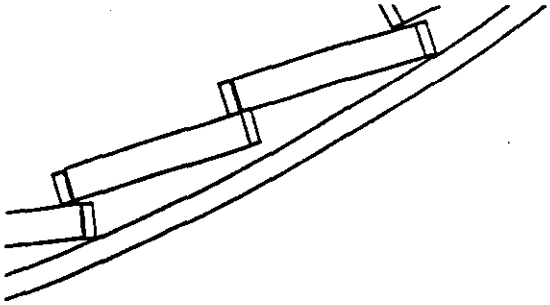

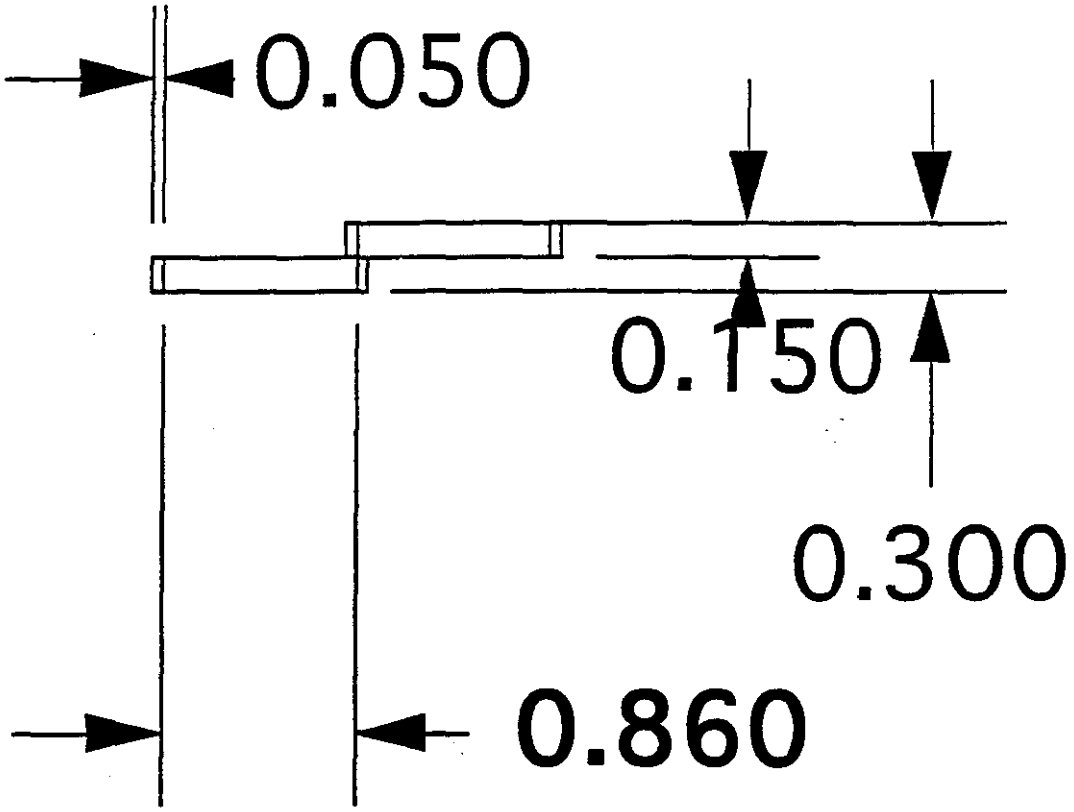

CSCg1Barrel
32 segments

CSCf2crzBarrellayout

<u>Lengths of active areas</u>

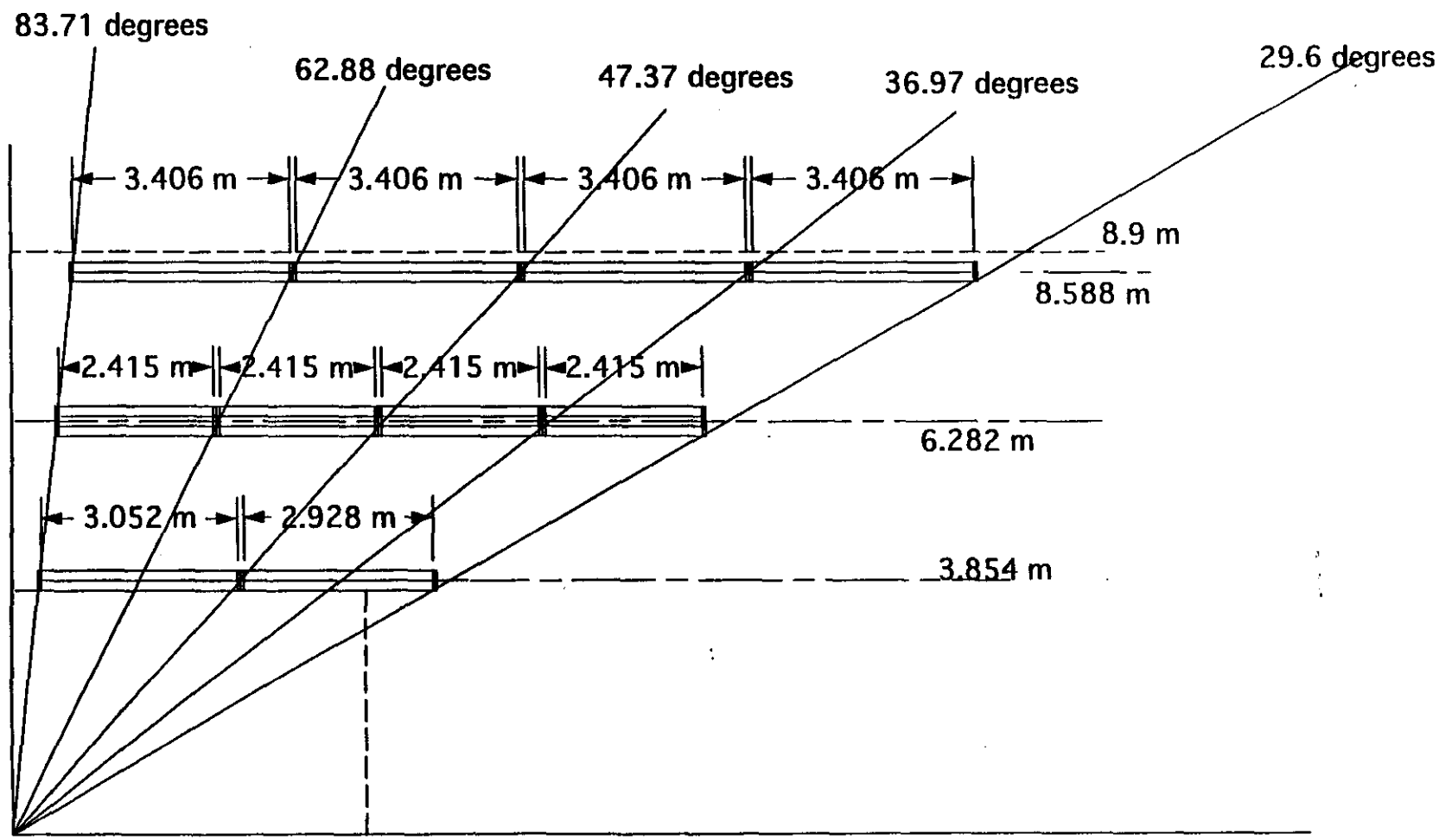

Appendix B - Limited Streamer Drift Tube engineering report

Sept. 20, 1992

APPENDIX I-Engineering Considerations

I. Chamber Design

A. Philosophy

The use of a limited streamer drift tube(LSDT) technology has the following merits:

1. A well known technology: This mode of operation has been used widely in many contemporary detectors, SLD, Aleph, Delphi, etc.[1-4]. The history of behaviour in reliability, ageing, and manufacture is well documented.
2. Accuracy: It has the merit of giving pulses of large amplitude (~100mV) and fast rise time (~5 nsecs); both properties result in a small time jitter in measuring drift times. A further merit is obtained by streamer initiation on first electron arrival; this results in a better time measurement over proportional mode operation[5].
3. Well specified mechanical design: The chambers can be and have been designed with complete mechanical drawings and their specifications. This has the merit that they can be built at many places, abroad (e.g. Russia or China) or even comercially; they require standard technologies.
4. Allow corelated z-measurement: As in the applications mentioned above, the open cathode tubes allow the placement of pick-up strips facing the wires thereby allowing a measurement of streamer longitudinal position along the wire. We make use of this feature by having pick-up strips perpendicular to the wire. The time correlation with the wire pulse allows an unambiguous x-y measurement of each streamer and can accomodate several tracks in one tube.
5. Accomodate level 1 triggering with bunch assignment.
6. Gas options: Several gas mixtures, including non-flammable ones, are available to operate in this limited streamer drift tube mode (LSDT).

7. Achieve baseline accuracy: See below.

B. Detailed Design

A cross sectional view of a full sized chamber is shown in Figure A.I.1. The chambers are supported and their positions monitored at the points along their length where the bridges holding the wires in place are located. An L-shaped strong back will fasten to the scaffolding; the position monitor (presumed, at this time to be an optical alignment method) is located in the holes provided on the upright of the strong back; a second hole is provided on the other end of the horizontal bar for vertical monitoring of the other side. The slot against which the ends of the wire bridges are mounted are precision machined with respect to the optical hole; the upright part of the L which bears the optical hole has been welded to the side wall before the machining. We have, then, only one transfer The grooves in the bridge which hold the wires are precision machined with respect to the reference edge of the bridge. We have tested the machining capabilities of a CNC on a Mycalex bridge and find that it can locate the grooves in absolute position to less than 10 μm's.

The other side of the bridge is held by a slip pin which controls the height of the bridge (less tolerance required ($\pm 150\mu$m's) but is not constrained by any "breathing" of the Al box. The bridges are not in contact with the cathodes, and suffer bending only under their own weight. This would be excessive in a 1 meter span; a central post is provided to eliminate this sag.

The cathodes are stacked in four layers resting ultimately on the Hexcel bottom. The cathode placement is not critical. The present method for making the cathode planes involves attaching L-shaped beams of 10 mil Al to a substrate of 10 mil Al with thermosetting films. The result is a layer of U-shaped tubes, which, when coverd with the

next layer on top give our required layer of square cross section cathodes with minimal material.

The space over the fourth layer contains the pick-up strip plane for accurate measurements in the longitudinal direction and additional drift time information.

With our design the seperation distance between bridges may be selected. We have chosen to place them at such a seperation that the droop under gravity is always below the desired measuring error rather than trust in making a correction for this, which requires assuming the tension is as planned. This better centering of the wire provides more insurance against electrostatic instability This does require more bridges and more optical alignment points and thereby more cost. If one wishes to relax this requirement it can, of course, be done.

Summing all the material in the chamber, excluding the sides, a particle traverses 6.4% of a radiation length.

C. Electronics and Gas System

These systems have only indirect influence on the mechanical design of the system. The most important is that their accomodation requires some dead space on the ends of the chambers. We use only one end for the electronics. Each wire is tied to a mate 2 wires away through a delay line; the time measurements made on this wire pair give a coarse ($\pm$ 15 cm) logitudinal position measurement. We use one skipped wire pair instead of adjacent pairs to avoid confusion with a track that crosses from one tube to its neighbor. To minimize dead space we plan to place the electronics package on the top of the chamber; the dead space is taken by the solder card and its support and the turning cables. See Fig. A.I.2.

D. Achievements on a Prototype Chamber.

The wire placement with respect to this optical reference point is done through several surfaces;optics to hole in strong back, strongback to chamber wall, chamber wall thickness,

bridge edge to wire groove, groove to wire seat. Each of these is called with an accuracy of 5/10,000 of an inch. In the prototype the accuracy called for in wall thickness was mistakenly poorer but, fortunately the accuracy actually obtained was better; we show some examples:

1. Fig. A.I.4: Scatter in absolute position of bridge grooves i.e. from x=nx25 mm where n is the number of the groove on a 50 cm bridge.
2. Fig. A.I.5: Scatter in groove position for a 1 meter bridge.
3. Fig. A.I.6: Scatter in measurements from an outside target (equivalent to the optical hole) to the 9th wire of the prototype chamber for 3 of 4 layers each with 3 bridges. The 4th layer, the bottom one, did not have its bridge seating point cleaned. This gives the overall accuracy from the accumulation of all errors.

Finally, we can obtain the relative deviation of a bridge from its companions by looking at cosmic ray events and measuring the average deviation of the residuals for that layer. This is shown in Fig. A.I.7; also shown is the deviation as measured with our measuring device.

Of interest as a measure of chamber performance, though of only indirect relevance to mechanical design, is data taken with our prototype chamber on cosmic rays. Fig. A.I.8 shows the scatter in individual wire measurements from fits to the tracks. The scatter would include any scatter in the wire positions, though we have measured this to be insignificant compared to the scatter from the measuring process itself. One measurement was done with a filling of 10% Isobutane, 90% CO_2 gas, which is not the most favorable mixture for accuracy. Another measurement was done with 25% Argon, 75% Isobutane and is shown in Fig. A.I.9. The scatter is lower; this gas is faster, has lower diffusion but is, unfortunately, flammable. We have deferred measurements with a CF_4 based gas, which is fast and non-flammable, to tests at the TTR.

II. Layout in the GEM Magnet.

A. Hermiticity.

1. Within a superlayer.

We take advantage of the lack of restriction in length for our chamber design to minimize the segmentation along z. This noble aim is modified in two places. A chamber 14.3 m long and 3 m wide, though possible in principal, seems rather unwieldly; we have arbitrarily cut it in half along z. (see Fig. A.I.10) Secondly, in order to get inter-sector overlap(see item 3), we require a strengthening plate in the middle of superlayer 2. Within superlayers 1 and 2, which are made of two four layer chambers, we achieve overlap in the rϕ direction by making the widths of the two chambers unequal in each sub-layer (see Fig. A.I.11). This solution is not available in superlayer 3. Here we plan to make a chamber which is full width; it will follow the technology of the prototype but will require multiple supporting through its width as opposed to the single one in our prototype. This chamber will be tipped, as in the PDT layout to achieve overlap.

2.) Within a sector.

This is solved by the hermiticity within superlayers. The break in z within superlayers need not be along a the same radial line from superlayer to superlayer. In this case one detects the muon but does not make a three point measurement for momentum determination.

3.) Between sectors.

The solution to overlap between sectors has been addressed seriously only recently. Superlayers 1 and 3 can be arranged in that fashion since the chambers can be mounted beyond the sector radial supports. The problem comes with the middle (no.2) superlayer. We propose a solution analogous to that studied for the PDT technology at Draper. In our case we take advantage of the natural division of this superlayer in two chamber layers. Rather than tilting the chambers we propose to make the sublayers of different widths and seperate them in r. Alternate sectors will expand or contract in angular width to accomodate the differing size chambers (see Fig. A.I.11). The strength of the scaffolding, however, must be borne through this layer. In the case of the PDT's this has been done by having plates at the ends of the chambers fastened to the struts which carry the moments

and shears through the layer; it is natural for this to have two penetrations and two end plates for the PDT's. We would like not to compromise the lenght of our chambers and propose one penetration and two end plates; we appreciate that this has not been studied for rigidity. Were it to fail we would return to a segmentation into 3 lengths.

B. Layer formation.

Our natural chamber unit has been designed to be approximately 1 meter in width. In the case of superlayer 3 where we do not have two chamber layers we have proposed a wide single chamber. For manufacturing ease we would still like to retain this smaller comfortable dimension; since we overlap chamber layers in superlayers 1 and 2 we do not lose coverage in the rϕ direction. However, we wish to have a rigid layer structure. This is also a requirement to take advantage of the alignment analysis done by G. Mitselmakher[A5]; this requires an alignment point at the sides of the chambers and one in the center. We do this by taking 2 chambers whose profile is shown in Fig. A.I.1 except that one is the mirror image of this so that its reference strong back is on the left. The horizontal members of the two strong backs are fastened by a sliding rod which then allows relative expansion in width but gives rigidity perpendicular to the chamber face. A hole is provided in the center of this cross rod for optical or wire alignment. It might be argued that a simple fastening between the two would be sufficient since any expansion of the support frame (e.g. for thermal reasons) would be matched by this rod, they both being of aluminum; we do this simply so that the chamber itself does not act as a constraint on the support structure. The resulting marriage is shown in Fig. A.I.12.

III. Alignment

In order to arrive at the desired measurement accuracies for muons GEM has set an overall placement accuracy for a trajectory measurement of 25 μm systematic and 100 μm for random measurements provided that the later, due mostly to the random nature

of single measurements on a chamber wire, will be made in sufficient number to reduce the overall error. This specifies, in the LSDT case, 8-8-4 measurements in the 3 succesive super layers. We may not be able to place the chambers to the 25 μm accuracy and keep them there as the surround changes (temperature, magnet on-off, etc.) but we expect to monitor positons to the desired accuracy so that corrections to the data can be made.

The important measurement is the deviation of a muon track from a ϕ = constant plane i.e. made in the rϕ direction. The succesive references are as follows:

1.) An optical line is defined by an LED-Lens- Quad cell triplet[A6], the three elements of which are mounted on the end plates (see Fig. A.I.10) occuring at the ends of the chambers and along the θ=30 and 90 degrees lines. The optical method of alignment is an outgrowth of the technique used in L3[A2]. We have made measurements with the elements of ref A1 and find a deviation of 5 μm is easily detectable (Fig. A.I.2).

2. From the plates (item 1.) we would form reference lines along the z-direction through the fiducial holes on the strong backs of the chambers themselves. Since our chambers have bridge supports every 2 meters or so this is a natural use of the stretched wire technique where multiple refernce points can be taken off a line. The optical method can still be used requiring "piggy-backing" off sets of optical triplets.

IV. Manufacture

A. Parts

The merit of our design is that a major part of the manufacture can be done by standard shops with standard supplies. We list the main components:

1. Chamber boxes: The side walls are made from Al extrusions; the standard straightness achieved in a normal extrusion is sufficient. The precision machining has only to be done at the areas where the bridges are to be attached; a wall thickness specified to 5/10000 inch is both standard and sufficient. The ends of the boxes are non-critical. We called for welding the sides; it may be that glueing is acceptable and easier.

2. Hexcel tops and bottoms-standard, though patching must be done on the large sizes.
3. Mycalex (or equivalent) bridges. These may be made in long lengths (> 0.5 m)but would require tooling costs. We have found gluing two 0.5 m pieces together satisfactory. Machining the grooves to 0.5 mils absolute is standard.
4. The present cathodes of 10 mil material were made by Lincoln Laboratory. They fastened multiple L-shaped pieces to a 10 mil plate with oven setting film adhesive. This may not be the cheapest or best technique but was straightforward.
5. Gold plated tungsten wire-standard.

B. Assembly (the factory)

The steps in putting a chamber together follow closely the procedures used customarily in the many Iarocci tube factories. The main difference is the checks on wire position that we would expect to do after the laying down of each layer; in time, this may become somewhat perfunctory, since we found no wire misplacement in simply laying the wire in grooves in our prototype. The outline of the various steps in the process are shown diagramatically in Fig. A.I.13. The times estimated for each step are included. These times are padded estimates from our experience with the SLD-WIC system and from the SCARF factory at the U. of Houston (R. Weinstein).

We had made a precision measuring device, a travelling microscope on a 48 inch arm tracked by a glass scale for wire placement checking (coming from the low bidder it required considerable calibration). This was readable by a PC and could certainly be made semi-automatic with a CCD at the focal point. Outside of this step the others are familiar.

(Parenthetical note) In GEM IN-92-19 "Detector Cost Review Report" Pg 4, item III.8. A skeptical remark is made as to laying down wires at 141 secs. each. Actually this is quite conservative, SCARF lays down 800 wires a day with hand soldering. We would be laying down, say, 10 wires at a time with multiple soldering. The precision does not enter in this step, the groove lays the wire automatically.

C. Exportability

An important aspect of the LSDT technique is that it is usable by other laboratories, not only in this country, but in other nations. We have some information on this though we hope to have a more complete report later.

1. China: The Univ. of Tsinghua has a German CNC with glass scale control. Prof. Ni Weidou while visiting here expressed the belief that the machining we require could be adequately done on their machine.
2. Russia: Dr. Igor Golutvin of Dubna felt that the machines at that laboratory might not be quite adequate. However, the loan or gift of an adequate machine seems like a good investment. Example: The bridge grooving machine which obtained 10 μm or better was a Hitachi Seiki Mod. 55 with glass scale installed; its modern replacement cost would be 100k$ to 150k$.

V. Costs

The costs of all materials and processing for our proposal have been assembled together with backup material in "The GEM Cost Book". This is rather voluminous but has been generally distributed and I assume any reader has access to it.

(Note 1) The cost estimate on the Aluminum boxes was made by the firm which made the prototype chamber box. They started with an Al plate and had to hog out the indentations in the profile resting from time to time to allow the plate to rest from the heat. They based their estimate on this work. The ultimate chambers will have extruded sides; the machining will just be done at the bridge support points. We will have a revised estimate shortly and expect it to be 2 times less or better.

(Note 2) The large cost spread by outside firms on the cathodes was done under the direction of Lincoln Laboratory. They advise ignoring the two very high estimates which in their opinion come from igorance and/or lack of interest.

VI. Schedule

A. Special lead times

We see no item or process that requires special R & D or lead time. One exception might be the manufacture of long continuous Mycalex bridges were we to choose that route as opposed to fastening or glueing sub-lengths together.

B. Manufacturing schedule.

There does not appear anything unusual in the manufacturing that is unconventional or questionable. We estimate the operation of the factory to take place over 3 or 4 years.

References

1.) A. C. Benvenuti et al. "The Iron Calorimeter and Muon Identifier for SLD", SLAC-PUB-4677, July 1988; NIM **A276**, 94 (1989); NIM **A290**, 353 (1990); NIM **A289**, 463 (1990).

2.) Aleph Technical Report 1983, CERN/LEPC/83-2; LEPC/PI 15 May, 1983.

3.) Delphi Technical Proposal CERN/LEPC 83-3 (1983); NIM **A273** (1988) 841.

4.) K. Lau et al, NIM **A306**, 397 (1991); D. Hungerford et al, NIM **A286**, 155 (1990).

5.) G. Mitselmakher, talk at the August GEM Muon meeting.

Figures

A.I.1. Cross-section of the chamber.

A.I.2. End view of the chamber.

A.I.3. Sensitivity of the optical alignment to a deviation in the central element (the lens).

A.I.4. Scatter in deviation of bridge groove position.(0.5 m bridge)

A.I.5. Scatter in deviation of bridge groove position (1.0 m bridge).

A.I.6. Spread in distance (mm) from outside target to wire no. 9.

A.I.7. Deviation in bridge position as measured by fits to cosmic rays and with our measuring device.

A.I.8. Residuals from fit to cosmic ray tracks with CO_2 based gas.

A.I.9. Residuals from fit to cosmic ray tracks with Argon-Isobutane filling.

A.I.10. Side view of LSDT chamber layout.

A.I.11. End view of LSDT chamber layout.

A.I.12. Fastening of two chambers to form a layer.

A.I.13. Diagrammatic flow of a chamber assembly procedure.

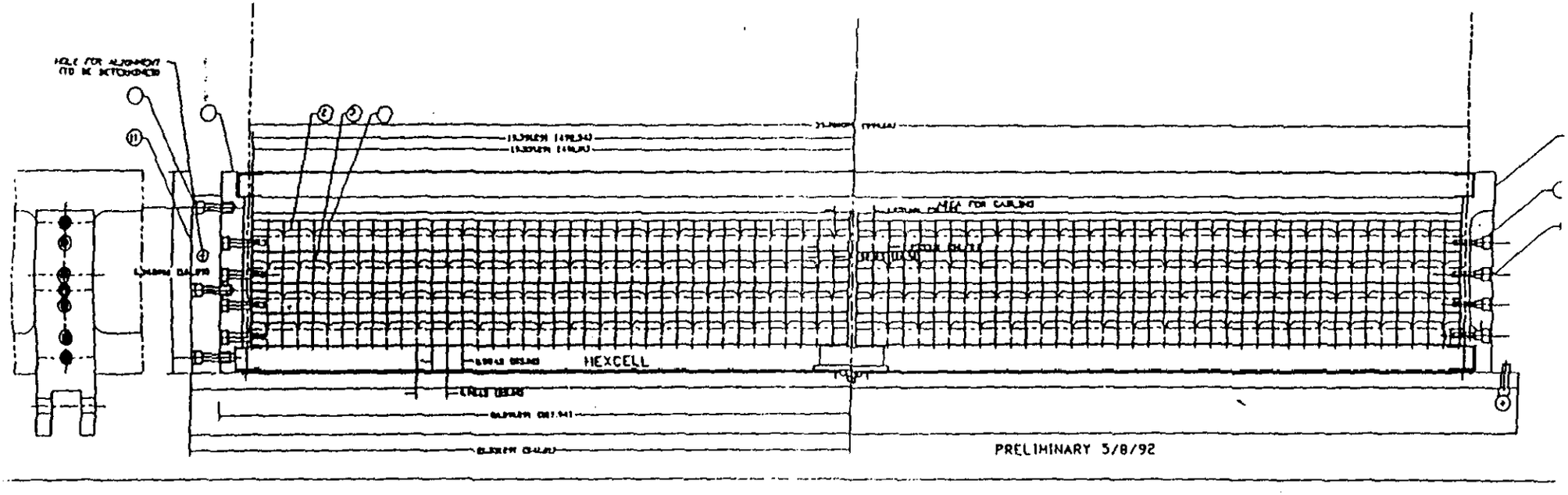

A.I.1. Cross-section of the chamber.

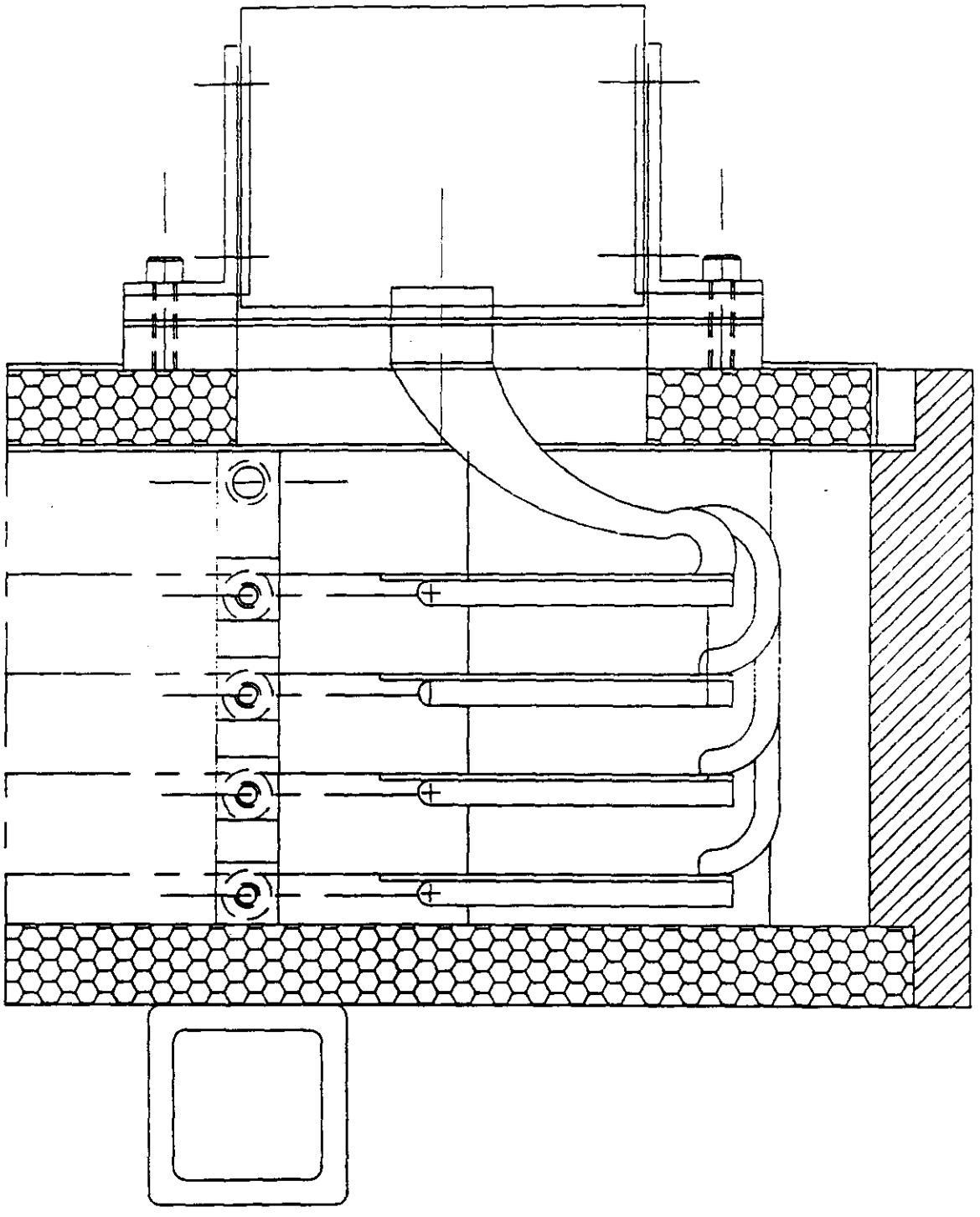

A.I.2. End view of the chamber.

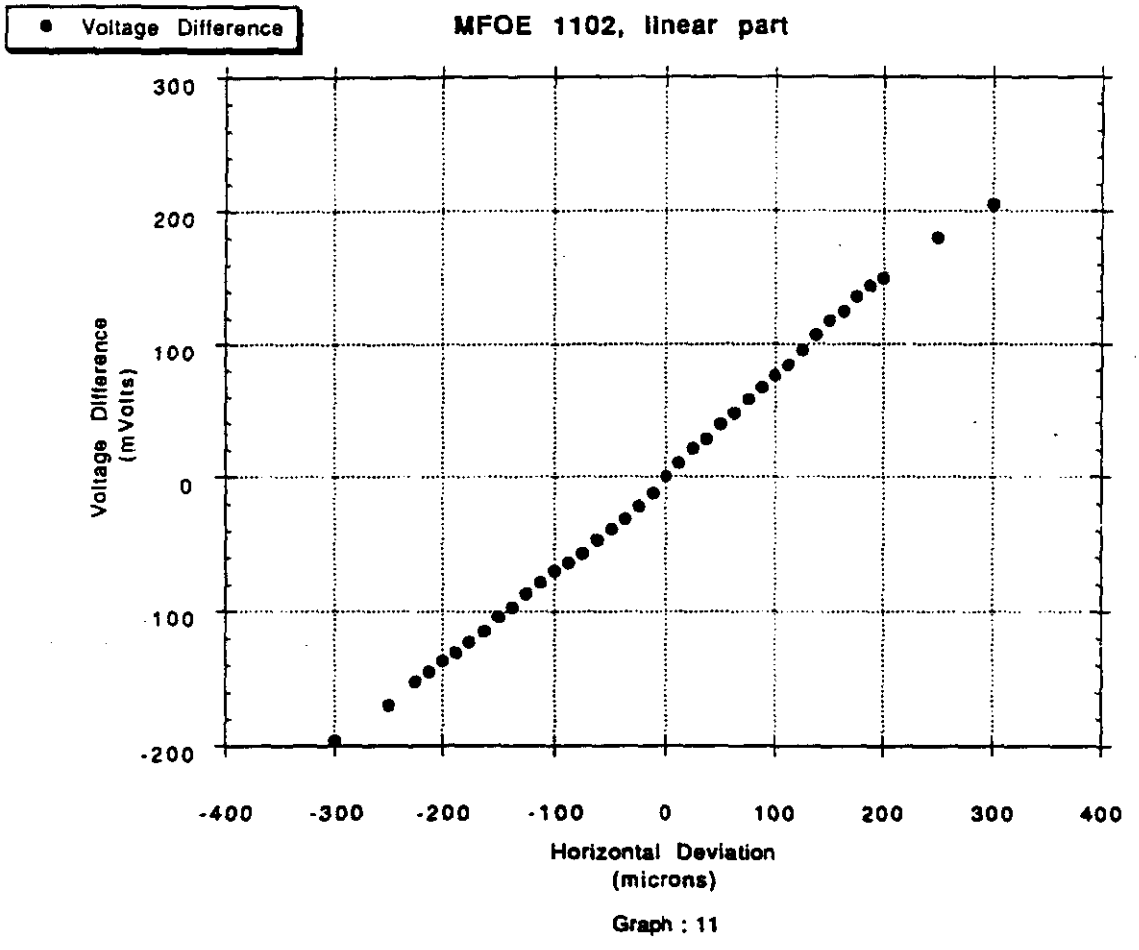

A.I.3. Sensitivity of the optical alignment to a deviation in the central element (the lens).

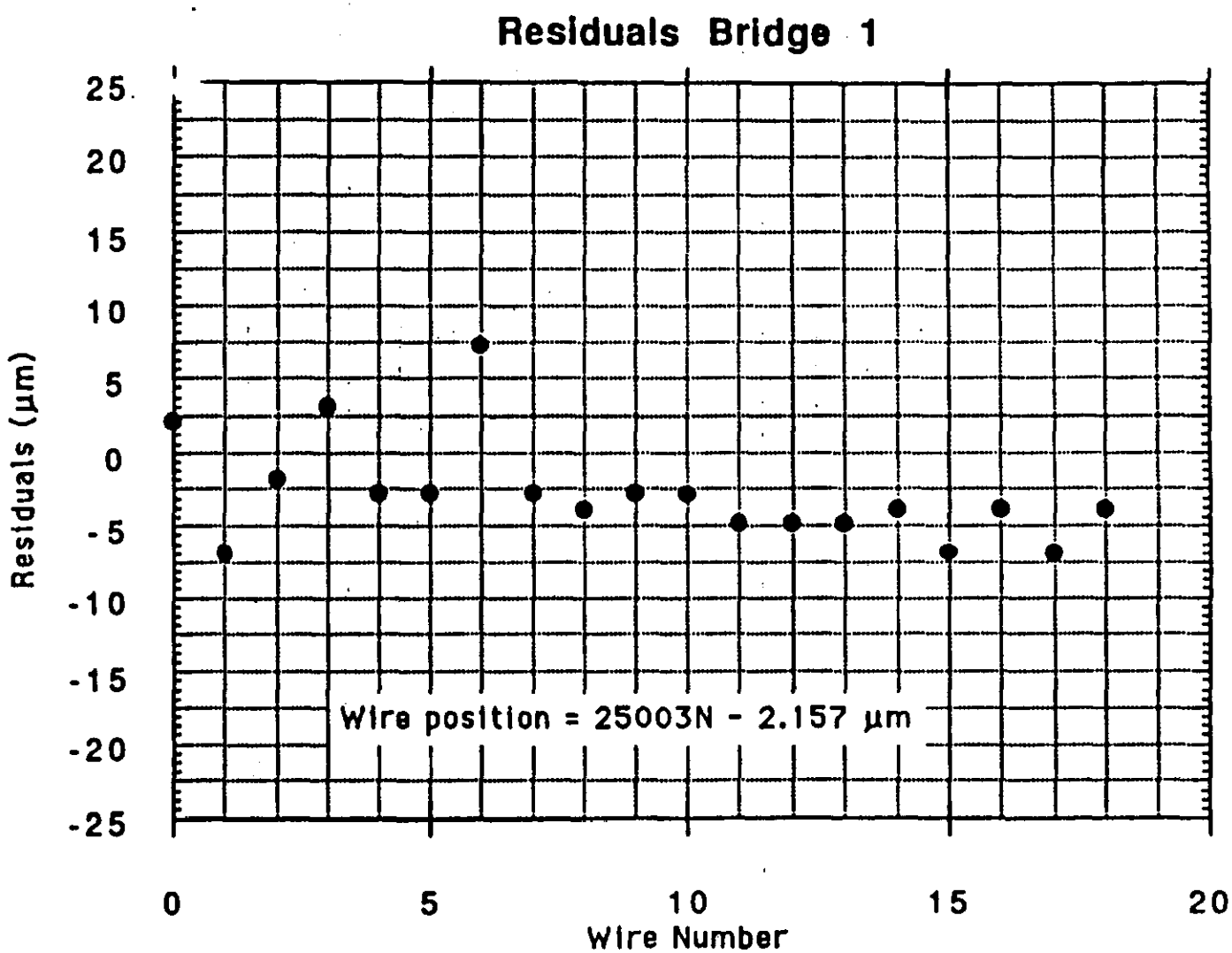

A.I.4. Scatter in deviation of bridge groove position.(0.5 m bridge)

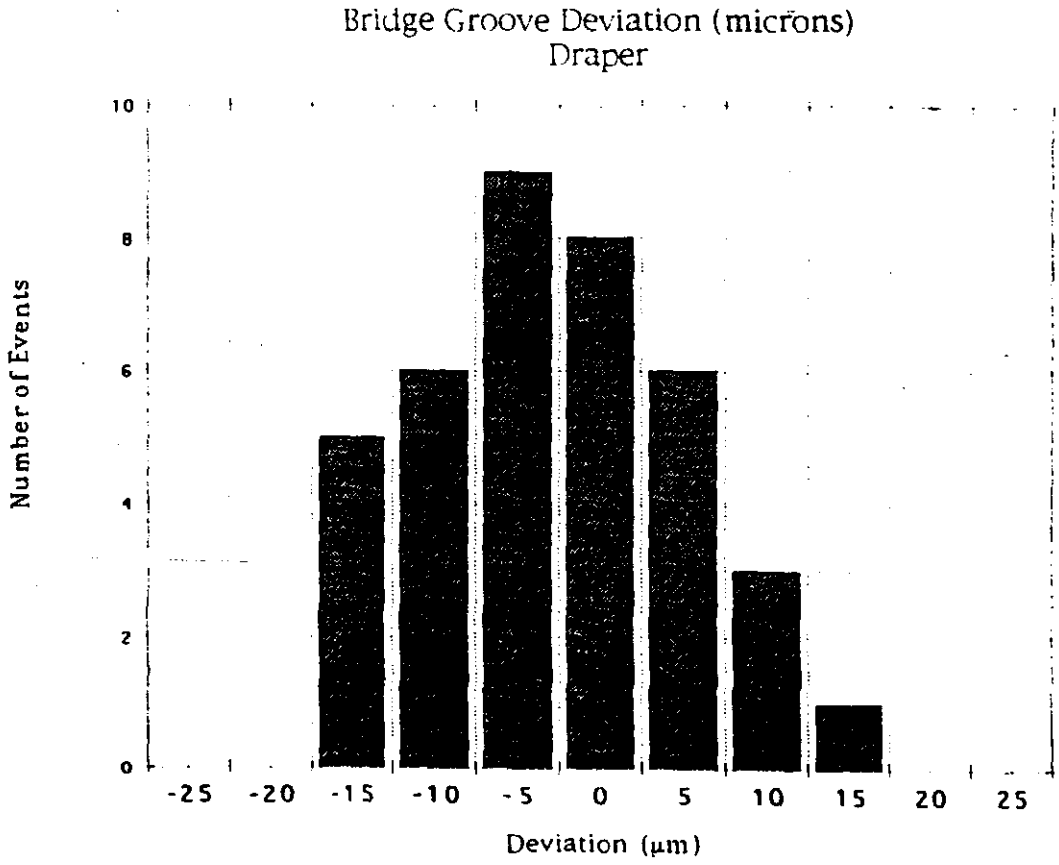

A.I.5. Scatter in deviation of bridge groove position (1.0 m bridge).

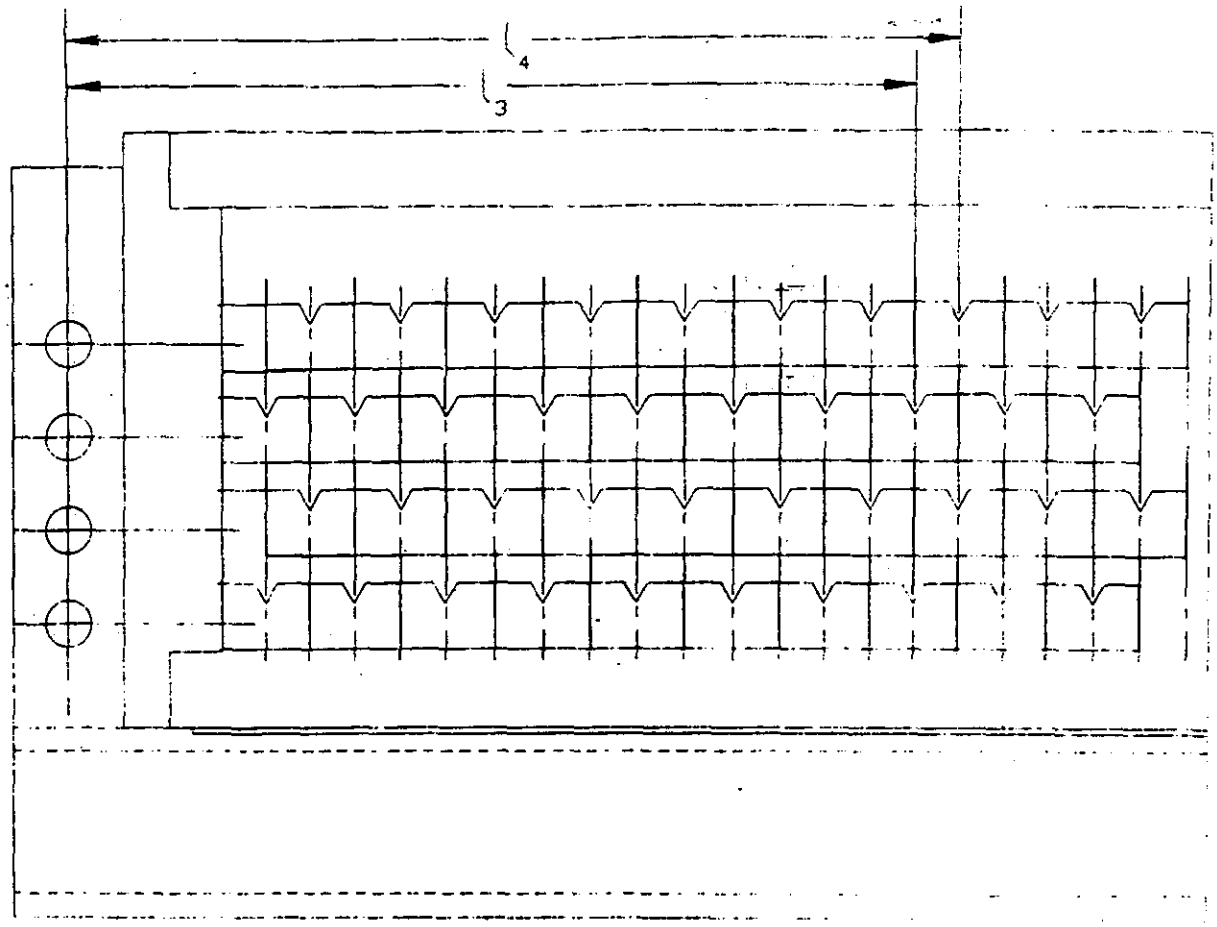

$l_3+(l_4-12.63)$ FOR 3 LAYERS, 3 BRIDGES

254.619
254.629
254.619
254.627
254.647
254.607
254.631
254.621
254.625

A.I.6. Spread in distance (mm) from outside target to wire no. 9.

PRELIMINARY 9/20/92

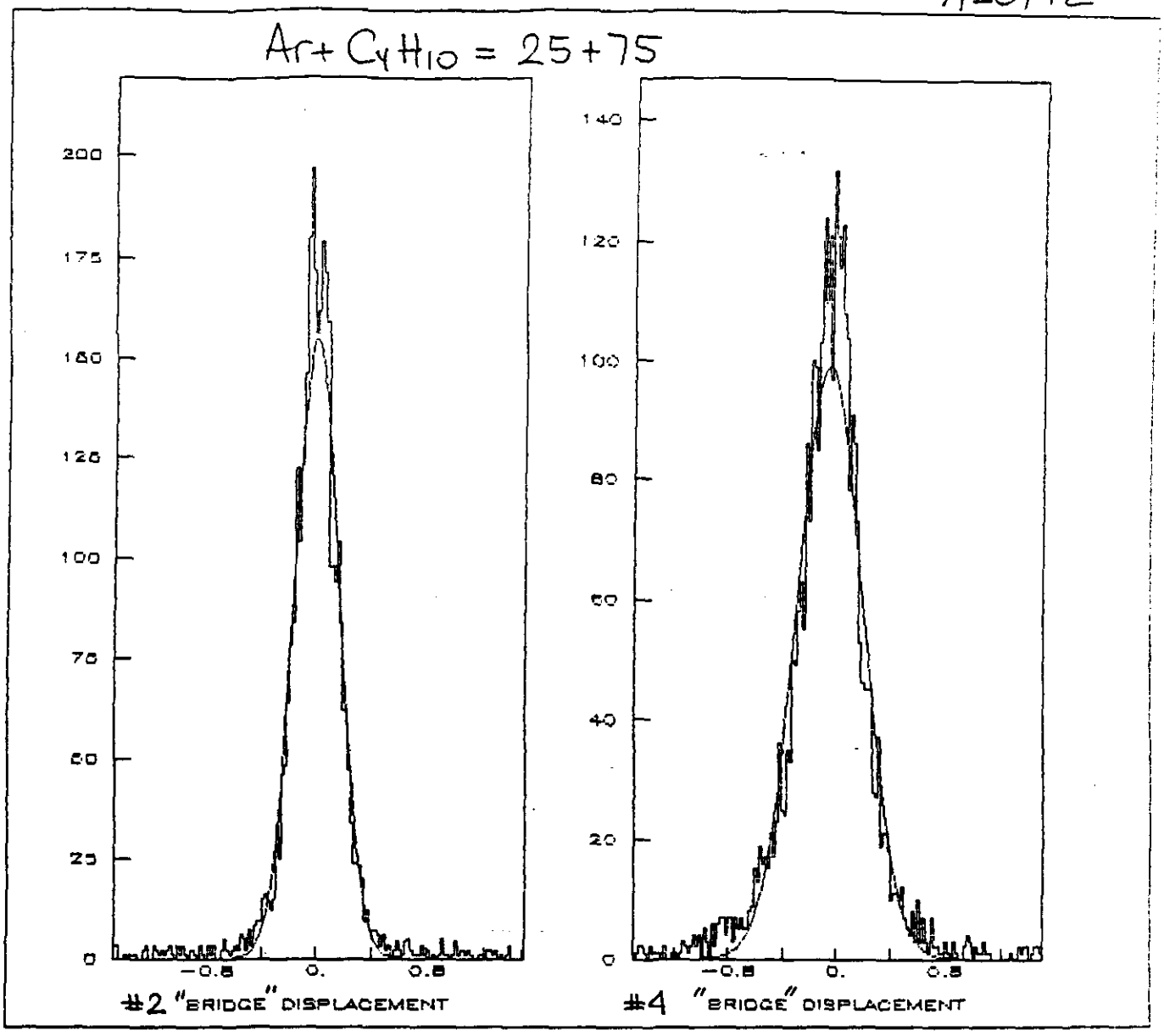

	DIRECT MEASUREMENT	DATA FIT
LAYER # 2 SHIFT	+25 ± 20 μm	-7 μm
LAYER # 4 SHIFT	+75 ± 20 μm	+56 μm

A.I.7. Deviation in bridge position as measured by fits to cosmic rays and with our measuring device.

PRELIMINARY 9/18/92

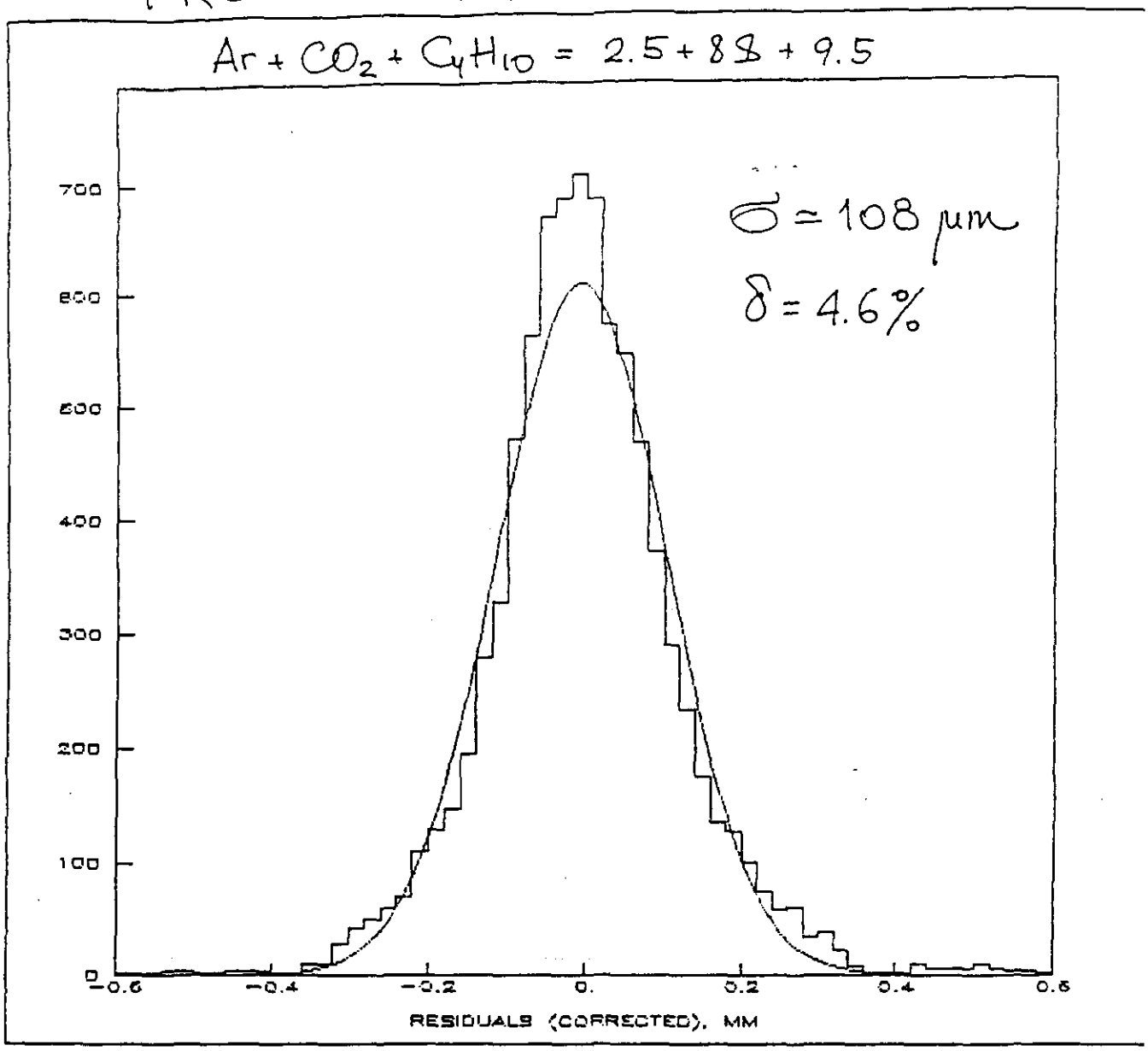

A.I.8. Residuals from fit to cosmic ray tracks with CO_2 based gas.

±3 $|\alpha| \leq 5°$ $\sigma = 108\ \mu m$

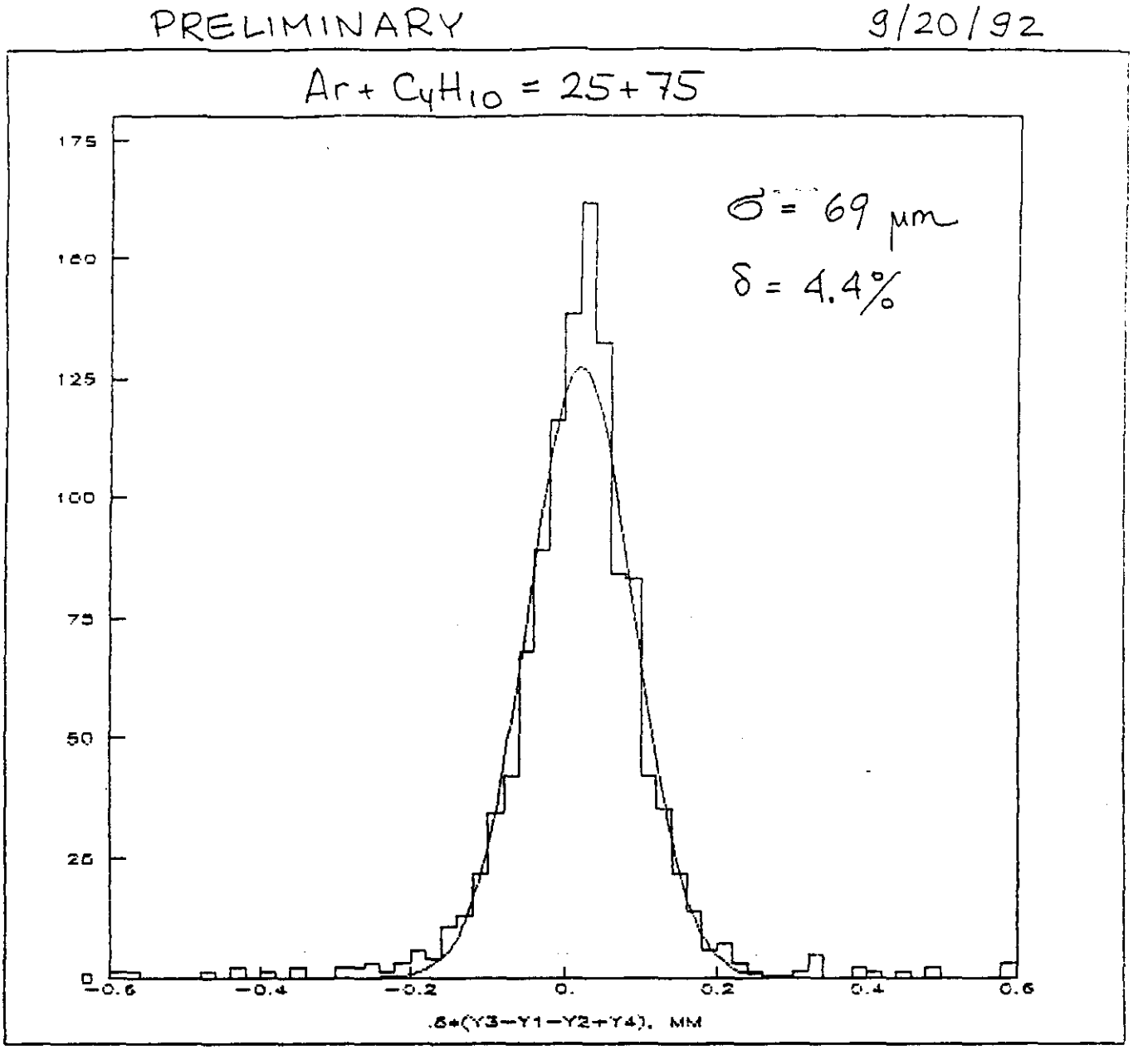

A.I.9. Residuals from fit to cosmic ray tracks with Argon-Isobutane filling.

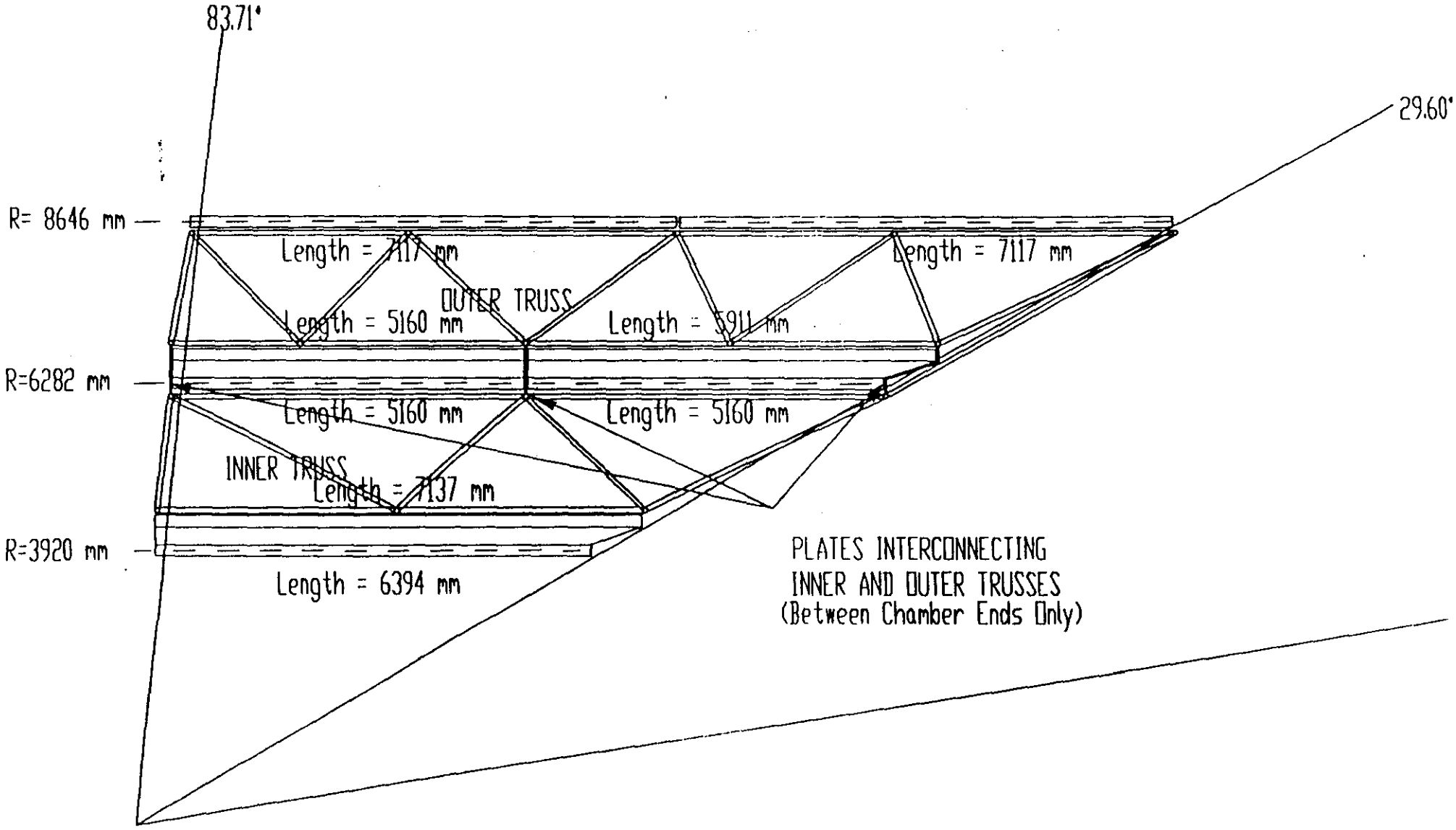

A.I.10. Side view of LSDT chamber layout.

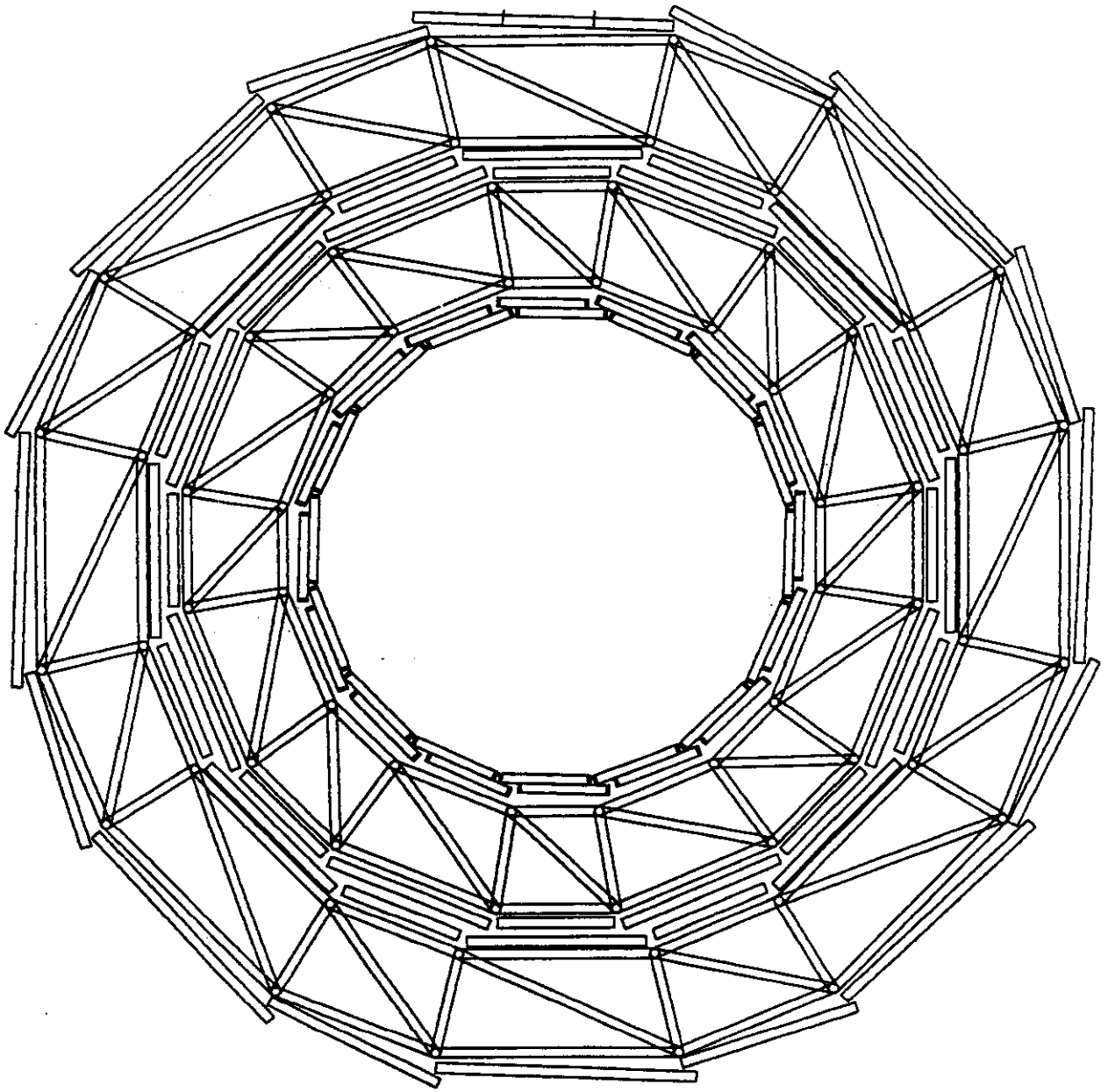

A.I.11. End view of LSDT chamber layout.

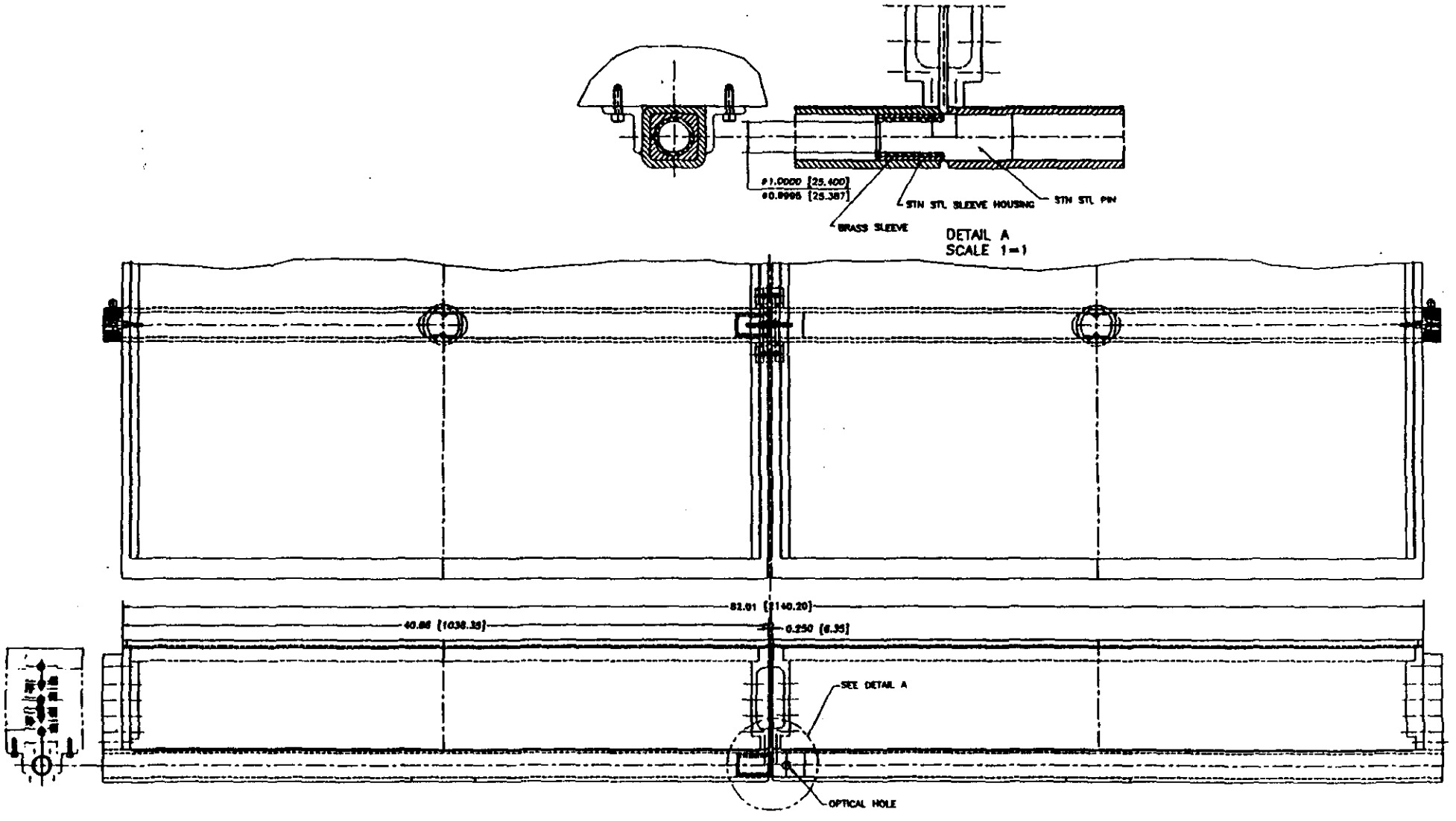

A.I.12. Fastening of two chambers to form a layer.

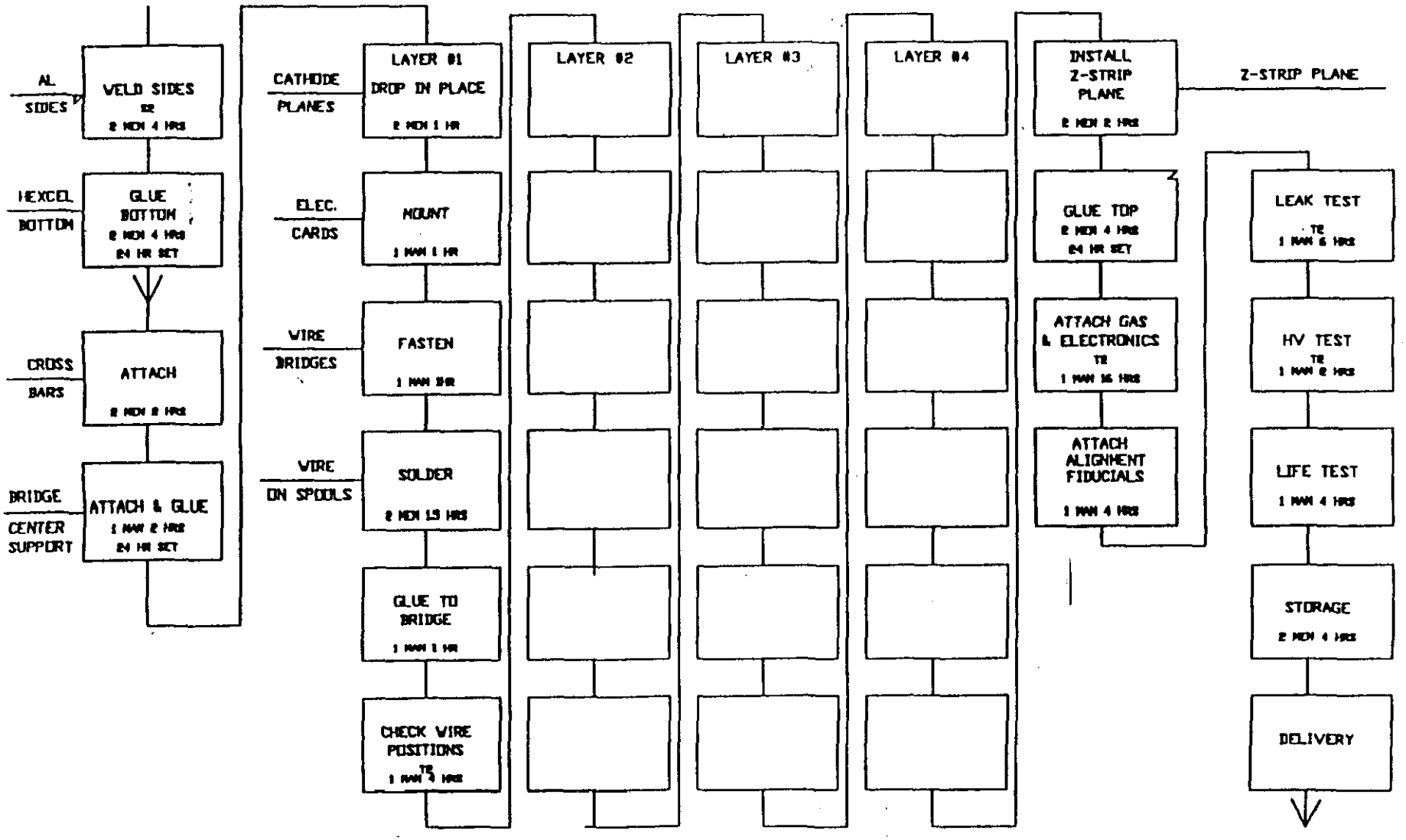

A.I.13. Diagrammatic flow of a chamber assembly procedure.

F

Appendix C - Pressurized Drift Tube engineering report

Design of a Pressurized Drift Tube System for the GEM Muon Detector

September 22, 1992

Prepared by C. Bromberg
for the PDT Collaboration

Table of Contents

Text 1-10

Tables 11-15

Figures 16-31

SEP-23-1992 16:01 FROM HIGH ENERGY PHYSICS TO 81214/08608 P.02

Introduction

The MSU group in collaboration with the Dubna group and other institutions from the CIS presents here a design study of a Pressurized Drift Tube (PDT) system for the GEM muon detector. Both groups have constructed prototypes of PDT chambers. The design presented here is based largely on the MSU prototype but design options from the Dubna detector which can be usefully incorporated at a future date are noted.

The PDT design will emphasize a) reliable, gas tight seals; b) precise placement of wires utilizing a precision end plate/gas manifold; c) tubes bonded together as unit; d) an assembly procedure which can be performed with a minimum of technical skill, and e) a high level of gas safety features.

The prototype to be delivered to the SSC the week of September 28 is identical to the design presented here. An assembly drawing of the chamber is shown in Fig. 1. The electronics for the prototype are standard, off-the-shelf, amplifier/discriminator cards, and therefore will exhibit characteristics which can be improved upon both in physical size and in electronic performance with components specifically optimized for the GEM detector.

SEP-23-1992 16:02 FROM HIGH ENERGY PHYSICS TO 81214708609 8 P.03

PDT General Design Concept

The GEM SSC collaboration is considering two types of drift chamber systems for the barrel section of the Muon Detector. From our perspective the Pressurized Drift Tube (PDT) option has the following specific advantages:

a) Drift tubes are a proven high precision technology, having been used by several groups at SLAC, the CDF group at Fermilab, the AMY collaboration at TRISTAN, and numerous application at CERN. The wire tension, supported by the metal wall of the tubes, has been measured to be stable and can be accurately predicted over the lifetime of the detector.

b) The required muon resolution (5% at 500 GeV) can be achieved with just a few drift measurements using a non-flammable drift gas at pressures of 2-4 atmospheres.

c) These non-flammable gases are compounds without hydrogen (Argon with CO2 or CF4) and thus are much less susceptible to neutron induced backgrounds; the proton nucleus of a hydrogen atom struck by a neutron can be given enough energy to be observed in all tracking detectors.

d) The PDT chamber is a very robust device. The wires are physically and electronically isolated from each other, which will insure that a rare wire breakage will cause the loss of only that tube.

e) The symmetry of the round tubes will result in a drift time which can be simply and accurately corrected for the effects of the nearly coaxial magnetic field.

f) The physical integrity of the laminated tube structure leads to a very strong and yet remarkably light package which need be supported only at the ends. This feature will ease the problems faced in the design of the support structure and alignment fixtures, and in the procedures required for installation.

g) The alignment of the chamber wires is completely determined from the ends. This allows the design of the sides of a PDT chamber to be free of any interference with the alignment system and allows many options for the overlap of chamber modules in phi.

PDT Weight

The weights of the various components in the PDT system are given in Tables 1 and 2.

The first table is for 16 azimuthal sectors while the second is for 32 sectors. As can be seen the overall weight is nearly unchanged between the two options. Changing the tube diameter will have a minimal impact on the chamber weight especially if the tube wall thickness can be reduced but the electronics and cabling will increase proportional to the number of additional channels. Changing the segmentation in z (longer or shorter tubes) will have an impact on the overall weight. The number of components and therefore the weight, except the tubes and cases, scale with the number of chambers.

Wire Support (End Plug/ Gas Manifold Design)

The end plugs and gas manifolds are the most critical components in the design. The plugs must seal the end of the tube at up to 4 atmospheres of pressure while providing a passage for the flow of gas through the tube, they must insulate the high voltage on the anode wire from the tube and provide for electrical contact between the conductive surface of the tube and the grounded gas manifold, and they must center the tube on the wire with moderate precision (to within 500 μm) and allow for the highly accurate relative positioning of the wires (to within 25 μm). The design uses standard parts, such as O-rings, wherever possible and takes advantage of modern mass production techniques, such as injection molded plastic or automatic screw machines and our own magnetic crimping device.

A. Gas Manifold:

Drawings of the gas manifold are shown in Figs. 2-4. One should note that the specification in Fig. 4 for the hole placement is a "true position" specification. The tolerance of 0.002" means that the true position of the hole centers in the manifold must lie within a circle 0.002" in diameter. This two dimensional specification and is even more restrictive than the relative position specification of ±0.001". In addition, it is important to realize when evaluating these specifications that all physics specifications are expressed in RMS deviations from nominal positions. For randomly distributed hole centers about the nominal positions our specification would yield a 10μ contribution added in quadrature with all other contributions to the position resolution. For an intrinsic resolution of 100μ from the drift time measurements the contribution of our hole specification to the total error would be entirely negligible.

If the position errors are systematic, as the measurements on one of our prototype manifold plates shown in Fig. 5 indicate, then the physics limit is

SEP-23-1992 16:03 FROM HIGH ENERGY PHYSICS TO 8121472855038 P.05

25μ and not 100μ. We find that the machine shop was unable to hold our tolerances, achieving only 20μ RMS on the systematic hole placement. One important feature of the precision manifold plate design is that there are **no other contributions to the systematic error in the wire placement.** Also, we believe that alternative procedures exist for production of the manifold plates that will be more accurate and less expensive than these plates but **the existing plates are already within the GEM systematic error limits.** Although we will mention this again later in the alignment section, it should be noted that the accuracy of the wire placement relative to our fiducials is guaranteed by the construction of the component parts and that no internal alignment procedures are necessary during or after assembly.

B. Tube End Plug:

A section drawing of the region of the chamber near the tube ends is shown in Fig. 6. The aluminum tube is terminated by a two part plug whose details are shown in Figs. 7-10 and machined from glass filled (15%) Delrin. We have determined that production of an injection-molded part is feasible and, based upon a firm quotation, will be much less costly but may require the use of a different material. The large plug part, Figs. 7 and 8, has an O-ring which insures a good gas seal. This plug part is crimped into the tube end by a magnetic crimping machine which was constructed at MSU specifically for this purpose. The compressive force on the tube walls needed for the crimp is produced by the interaction of a rapidly changing magnetic field (created by discharging a capacitor through a copper coil wrapped around the tube) with the induced current. The tube can be crimped in a highly repeatable fashion with this device. The plug has been shaped so that the tube, once crimped, holds the plug firmly and the tube is wrapped neatly over the plug. This allows easy electrical contact from the tube wall to the manifold plate through a phosphor-bronze spring.

The second part of the plug, Figs. 9 and 10, looks like a hollow bolt. Three small O-rings make up the gas seal. The threads on the bolt need not be precise as the first O-ring (the one closest to the threads) seals the bolt into the plug. The remaining two O-rings on the bolt seal above and below the gas channels in the manifold plate. Gas flows through a hole in the bolt into the tube and is removed by an identical plug at the opposite end of the tube. The assembly

SEP-23-1992 15:03 FROM HIGH ENERGY PHYSICS TO 3121470850B8 P.06

procedure for the chamber is greatly simplified by this two part plug: the manifold plates can be rigidly mounted on the assembly table at the correct separation, the pre-plugged tubes placed between the manifold plates and the bolt then inserted through the manifold plate into the plug.

C. Wire Location:

The wire is located in the manifold plate by a precisely drilled jewel which itself is positioned accurately on the centerline of the bolt near its head. At this location on the shaft of the bolt is a spherical surface designed so that the bolt fits precisely in the center of a manifold plate hole but can still change its angle somewhat to adjust to small imperfections in the bolt and plug manufacture (particularly in the threads) while not disturbing the precise centering of the jewel. The parts of the wire location system are shown in Figs. 11-13.

To wire a tube, the 50μ tungsten wire is attached to thin stiff rod which is then passed through the hollow of the bolts in both ends. The tungsten wire is removed from the rod and threaded through the jewel hole in both pins and the pins are then pressed into the bolt heads. The wire is tensioned, held firmly by a high tensile strength silver alloy solder and then epoxy is injected into a small hole which gas-seals the pin and provides a second mechanical hold on the wire. The solder we use (Sn62) has also been recommended for its lower gold amalgamation properties.

We have made some recent measurements on the accuracy of the jewel hole placement in the center of the manifold plate holes. This was done by a inserting a plug in a spare manifold plate and focusing a microscope on the center of the 50μ hole in the jewel. The plug was then slowly rotated in the hole. The center of the hole in the jewel moved in a circle whose diameter was recorded. Without moving the microscope a series of other plug and jewel combinations were inserted in the same hole and similar measurements made on them. The data are shown in Fig. 14, where we have chosen a random rotation for each jewel while the error in the concentricity is taken from the measurements. The RMS displacement of the jewel hole center along the manifold plate (x-direction) from the nominal hole center is 12μ. This will be a random position error and will add (in quadrature) a negligible amount to the 100μ resolution expected for the drift distance measurements.

SEP-23-1992 16:04 FROM HIGH ENERGY PHYSICS TO 8121472663098 P.07

Two other options are being considered for wire placement. These two are shown in Fig. 15. The first uses a wedge rather than solder to hold the wire while the second eliminates the jewel and eases the precision of the manifold plate by using a precise comb to position the wires while soldering.

Gas Systems

No specific problems are anticipated in the gas system. Our design is focused on the use of non-flammable gases which are commonly used in drift chamber systems where safety concerns prevent the use of a flammable gas mixture. Nevertheless, there are some advantages to using flammable gas mixtures which, if the safety concerns can be successfully addressed, we would prefer to have available to us. Therefore, our design incorporates a second gas barrier which completely encapsulates the gas volume of each detector and can be flushed with an inert gas and continuously monitored for chamber gas leaks. This second barrier will prevent chamber gas from entering the volume surrounding the detectors. If a detector is found to be leaking remote actuated valves will allow the chamber gas to be shut off to that detector before a flammable mixture is reached. Our prototype has such a barrier which we will demonstrate to the safety engineers.

Chamber Structure

The PDT prototype described here is a very light and rigid package. As the tubes are layered up between the manifold plates and side stops, structural epoxy is placed between the tubes and between the tube layers. The epoxy cures overnight securing the tubes into a single package which, by construction, is perfectly matched to the manifold spacing. A foam spacer is later glued to the surface of the tubes and a 1/4" hexcell cover is then glued completely around the chamber to form the second gas barrier and to protect the tubes from accidental damage. The chamber rests on the two manifold end plates and is stiff enough so that little or no sag is noted in the center of the package. The chamber can be easily lifted from eyes which bolt onto the manifold plates with no specific precautions to limit flexing as the package is quite stiff in all dimension.

SEP-23-1992 15:04 FROM HIGH ENERGY PHYSICS TO 3121470355088 P.08

Superlayer Configuration and Support Structure

The PDT design presented here has considerable flexibility in its ability to accommodate various superlayer configurations or support structures. Using the current tube diameter and tungsten wire chamber lengths beyond five meters are near the operational limits of the technology. Our prototype has 3.6 meter tubes. Five meter tubes would have to be tested before they could be considered for the GEM detector. The segmentation of the superlayers in z will be dictated by alignment issues. The PDT design has a very compact end plate design with accessible mounting points referenced to the wire locations. This means that the chambers can literally be placed as close to each other in phi as the mechanical independence tolerances will allow.

The PDT chamber design is very flexible in its ability to accommodate various azimuthal segmentation. Both the 16 and 32 azimuthal sector solutions are acceptable with a preference for the 32 sector solution to limit the width of chamber modules. The mating of chamber edges in azimuth can be accomplished with little or no loss of acceptance and with only minor losses in efficiency compared to the center of each chamber. It is also quite feasible to make the tubes conform to the surface of a cylinder while keeping the endplates rectangular; the holes would be located on a circular arc. While this option would be adopted only if it were necessary for physics reasons, it does show the flexibility of the PDT design to meet the GEM criteria.

The costing of the PDT system has been thoroughly analyzed for the 16 segment design with 288 total chambers and 3.8 cm diameter tubes in an 8-8-4 superlayer configuration and with a 3-3-3 segmentation in z. These estimates are given in Table 3 and are the source for the information contained in the GEM Muon Subsystem Cost Matrix (we recently updated the information in the table to show the 3-3-3 configuration). We reconfirm these estimates and feel even more confident of their correctness and ability to absorb various changes in the design without noticeable increases in cost. In particular, the labor costs are thought to be well within the capabilities of the Dubna group even with some escalation due to an increase in the number of chambers to be constructed if a 32 sector design is chosen.

Electronic Packaging Requirements

The PDT electronics will locate amplifiers and discriminators on the chamber while the digital signals will be carried off the chambers via cabling. These custom electronics

SEP-23-1992 15:05 FROM HIGH ENERGY PHYSICS TO 81214703508B P.29

circuits will be based upon recent application in high energy physics and will be compactly located on the surface of each end-plate (the amplifiers and discriminators will not extend beyond the readout boards as they do in the prototype). Each channel of electronics will consume about 300 mW of 5 volt power. Since there are just over 100k channels, cooling for approximately 30kW of power must be provided. Since this will be spread out nearly 300 chambers, one needs to provide each chamber with about 100W of cooling. This seems like a very manageable number. The individual circuits will be cooled with a closed air flow system for each chamber or group of chambers which will have the heat removed via heat exchangers out of the detector hall. No specific design is available at this time.

We will want to have the 5V power supplies located near the chambers. This will require that AC power to be brought into the detector and properly shielded. HV supplies are not as serious as the power requirements will be much lower and longer runs of supply cable can be accommodated.

Size Limitations and Utility Routing

The average chamber will have about 20 signal cables each with 17-twisted pairs. Twenty cables have a cross sectional area 1" thick by 2" wide. There will be 600 sq. in. of cable for the barrel PDT system. We have also estimated the size of the gas lines needed. We find that 1/4" diameter piping is adequate for our flow rates through each chamber but that the size of the manifolds must increase to a total of 15 sq. in. (two 3" diameter pipes) for the inlet and outlet lines gas lines.

Failure Tolerance

As pointed out earlier the failure of a wire is a very minor occurrence. A leak when using a non-flammable gas will easily be handled by our second level gas barrier system. The chamber gas will simply exit through that system. We currently are observing a leak rate of 0.5% of the over pressure/hour from the prototype. This leak rate is consistent with our tube testing procedures. Those procedures pumped up each tube to 50 PSIG with Helium and watched for 1 minute and removed any tube (there were only 3) which showed a pressure drop of 0.5 PSIG in that time or 1%/minute. If there were a single tube with a leak at this limit while the rest were completely sealed one would have a total leak rate similar to that observed for the full prototype. We suggest that in the future each tube be tested under pressure in a water trough to spot smaller leaks than we could previously observe on a single tube.

SEP-23-1992 15:25 FROM HIGH ENERGY PHYSICS TO 8121470350B8 P.10

Manufacturing Approach, Philosophy, Schedule, etc.

Certain components of the PDT design presented here are unavailable in the CIS. These include thin-walled aluminum tubes, injection molded parts, precision manifold plates, hexcell panels, etc. Within these limitations a clear path to the chamber construction has been worked out. The parts that cannot be obtained in the CIS will be purchased in the US. Assembly of the tube ends, including the magnetic crimping and joining of the manifold plate halves will also be performed in the US. These components will then be shipped to Dubna for assembly and wiring of the chambers, installation of the electronics and tests. Completed chambers will then be shipped to the SSC lab for installation. Based on the labor estimates in Table 4 the Dubna facility is capable of assembling 3-5 chambers/week. At this rate the full chamber system can be assembled in 3-4 years depending on the number of chambers (azimuthal sectors).

We will have no trouble meeting the GEM construction deadlines and within our cost estimates. There don't appear to be any items whose acquisition time is out of line with the construction schedule. As for availability, the prototype we will deliver to the SSC next week could be put into the GEM detector two weeks later and meet all of the specifications for the final product.

Alignment and Structural Performance

The PDT physics performance will depend on the ability of the chambers to maintain a constant tension on the tungsten wires. The wires will stretch nearly 2 cm under the standard tension and thus a 5% change in the tension would require a 1mm change in the overall length which is well beyond the any reasonable thermal effects in this chamber. The wires will sag by about 200-300 microns so that the wires must be installed with an accurately set tension to be able to predict the location. Recent data taken by the Dubna group and shown in Figs 16, indicates that a 1% RMS accuracy in the wire tension has been achieved and thus 1% accuracies (a few microns in sag) are possible. The total contributions to the error budget are shown in Table 5.

When the alignment components are designed we feel confident that mounting of these components on the PDT endplates will be relatively simple compared with other chamber

SEP-23-1992 15:06 FROM HIGH ENERGY PHYSICS TO 9121470850B9 P.11

technologies. The alignment issues were discussed in the earlier section on the wire locating system where we noted that the accuracy of the wire placement relative to our fiducials is guaranteed by the construction of the component parts and that no internal alignment procedures are necessary during or after assembly and that the sides of the chamber are completely free of alignment fixtures which will allow overlap of the chambers in phi without difficulty.

The PDT chambers will be stiff enough to be supported only from the manifold plate edges. We are concerned, however, about vibrations of the support system near the 30 Hz resonance for our wires. To give you a sense for the problem, we are working on a scheme to measure the tension of the wires by mechanically vibrating the chambers at the resonant frequency of the wires and noting the changes in the capacitance of the wire in the tube as it displaces from the equilibrium position by a few mm. Thus we must be sure that the normal modes of vibration of the support system are far from the resonant frequency of the chamber wires.

Coverage

We are confident that the PDT system as currently envisioned can provide coverage of phi and theta which is equal to or better than any other the other technologies being considered. We certainly plan to incorporate an overlap in azimuth as this is where is the most to gain (the tension support system which was proposed earlier by Miller and Bromberg optimized the azimuthal acceptance without chamber overlaps in phi). Any further reductions in acceptance losses will require a better specification of the global alignment scheme.

Cost

This item was covered in considerable detail earlier and in the GEM muon cost review documents and are shown in Table 3 of this document.

SEP-23-1992 15:07 FROM HIGH ENERGY PHYSICS TO 8121470850B8 P.12

TABLE I

GEM- PDT CHAMBER SPECS

INPUT PARAMETERS:				
Azmuth angular coverage ±:		60.0		
Tube Material, density:		Alum.	2.7	
Tube Wall: (mm)		0.30		
M. Plate Thickness (mm), density		19.05	2.7	
Case Thickness (mm), density:		6.40	0.25	
VARIABLES:				
Radius (m):	3.9	6.3	8.7	Total
# of Segments:	16	16	16	
# of Layers:	8	8	4	20
Tube Dia: (mm)	38.0	38.0	38.0	
Chambers/Half:	3	3	3	144
RESULTS:				
Tube Length: (m)	2.3	3.6	5.0	
Tubes/Chamber:	320	512	352	
Chamb. width: (m)	1.55	2.51	3.46	
Chamb. thick.: (m)	0.40	0.40	0.25	
Weights (lb)				
Tubes:	153	396	376	
Manifold plates:	142	229	197	
Plugs:	47	74	51	
Case:	35	82	137	
Electronics,cable:	160	256	176	
Total/Chamber:	537	1037	938	
Weight/Segment:	1611	3112	2814	7538
Weight/Half:	25779	49795	45030	120603
Tubes/Half:	15360	24576	16896	56832

SEP-23-1992 15:07 FROM HIGH ENERGY PHYSICS TO 8121470860B8 P.13

TABLE II

GEM- PDT CHAMBER SPECS, 32 SECTORS

INPUT PARAMETERS:

Azmuth angular coverage ±:	60.0	
Tube Material, density:	Alum.	2.7
Tube Wall: (mm)	0.30	
M. Plate Thickness (mm), density	19.05	2.7
Case Thickness (mm), density:	6.40	0.25

VARIABLES:

Radius (m):	3.9	6.3	8.7	Total
# of Segments:	32	32	32	
# of Layers:	8	8	4	20
Tube Dia: (mm)	38.0	38.0	38.0	
Chambers/Half:	3	3	3	288

RESULTS:

Tube Length: (m)	2.3	3.6	5.0	
Tubes/Chamber:	160	256	176	
Chamb. width: (m)	0.77	1.24	1.71	
Chamb. thick.: (m)	0.40	0.40	0.25	
Weights (lb)				
Tubes:	77	198	188	
Manifold plates:	70	113	98	
Plugs:	23	37	26	
Case:	21	46	73	
Electronics,cable:	80	128	88	
Total/Chamber:	271	522	472	
Weight/Segment:	813	1567	1416	3796
Weight/Half:	26006	50151	45306	121463
Tubes/Half:	15360	24576	16896	56832

SEP-23-1992 16:07 FROM HIGH ENERGY PHYSICS TO 8121472868098 P.14

TABLE III

PDT COST ESTIMATE- 16 Sectors

NUMBER OF CHAMBERS: 288

NUMBER OF CHANNELS: 114000

ITEM	REQ'D (K)	COST ($)	NOTE	TOTAL ($K)
TUBES	114	29.92	2	3411
PLUGS	228	1.70	1	388
WIRE GUIDES	228	1.50	1	342
WIRE (m)	570	0.20	2	114
MANIFOLD PLATES	0.576	2500	2	1440
CASE	0.288	300	2	86
R.O. BOARDS	3.563	50	3	178
TEST/ASSEMBLY EQUIP.			3	200
	TOTAL COMPONENTS			6159
LABOR (hrs)	130	25	4	3250

NOTES:

1. BASED ON ESTIMATE FROM SOURCE
2. BASED ON PROTOTYPE, NO ALLOWANCE FOR QUANTITY DISCOUNT OR ALTERNATE METHODS
3. ESTIMATE
4. ESTIMATE (450 HRS/CHAMBER)

R. J. MILLER 8/30/39

SEP-23-1992 15:08 FROM HIGH ENERGY PHYSICS TO 8121470360B8 P.15

TABLE IV

PDT AVERAGE CHAMBER ASSEMBLY: 396 Tubes
16 SECTOR, 1.5 IN DIA

Operation	Persons	Unit Time (hrs.)	Total Manhrs.
Inspect tubes	2	0.02	15.8
Cut tubes to length	2	0.02	15.8
Debur tubes	1	0.02	7.9
Clean tubes	1	0.02	7.9
Flair tube ends	2	0.01	7.9
Inspect plugs	1	0.01	7.9
Put O-rings onto plugs	1	0.01	7.9
Crimp plugs into tubes	2	0.02	31.7
Pressure test tubes	1	0.05	19.8
Inspect Manifold Plates	2	2	4.0
Assemble Manifold Plates	2	5	20.0
Setup Assembly Table	2	8	16.0
Assemble tubes into Manifold	2	0.02	15.8
Insert Wires into tubes	2	0.1	79.2
Seal plug ends	1	0.02	7.9
Install gas fittings	1	1	1.0
Pressure test assembly	2	8	16.0
HV test	2	0.02	15.8
Test wire tension	2	0.02	15.8
Assemble Case	2	10	20.0
Prepare Readout Boards	1	1	12.4
Test Readout Boards	1	0.5	6.2
Assemble Power Buses	2	4	8.0
Assemble R.O. Boards	1	1	12.4
Assemble HV Boards	1	1	12.4
Final testing	2	8	16.0
Package for Shipping	2	8	16.0
Total			418

R. J. MILLER 8/30/39

SEP-23-1992 16:09 FROM HIGH ENERGY PHYSICS TO 8121472268038 P.16

TABLE V

Error Budget

Source	Status	± Limits (μm)	Random RMS(μm)	Systematic RMS(μm)
Wire - Jewel	Calc.	5	3	0
Jewel - Bushing Bushing - Plug Plug- M.P. Hole	Meas.	25	12	0
M.P. Hole - Alignment	Meas.	50	15	20
Total			**20**	**20**

SEP-23-1992 15:08 FROM HIGH ENERGY PHYSICS TO 81214708508B P.17

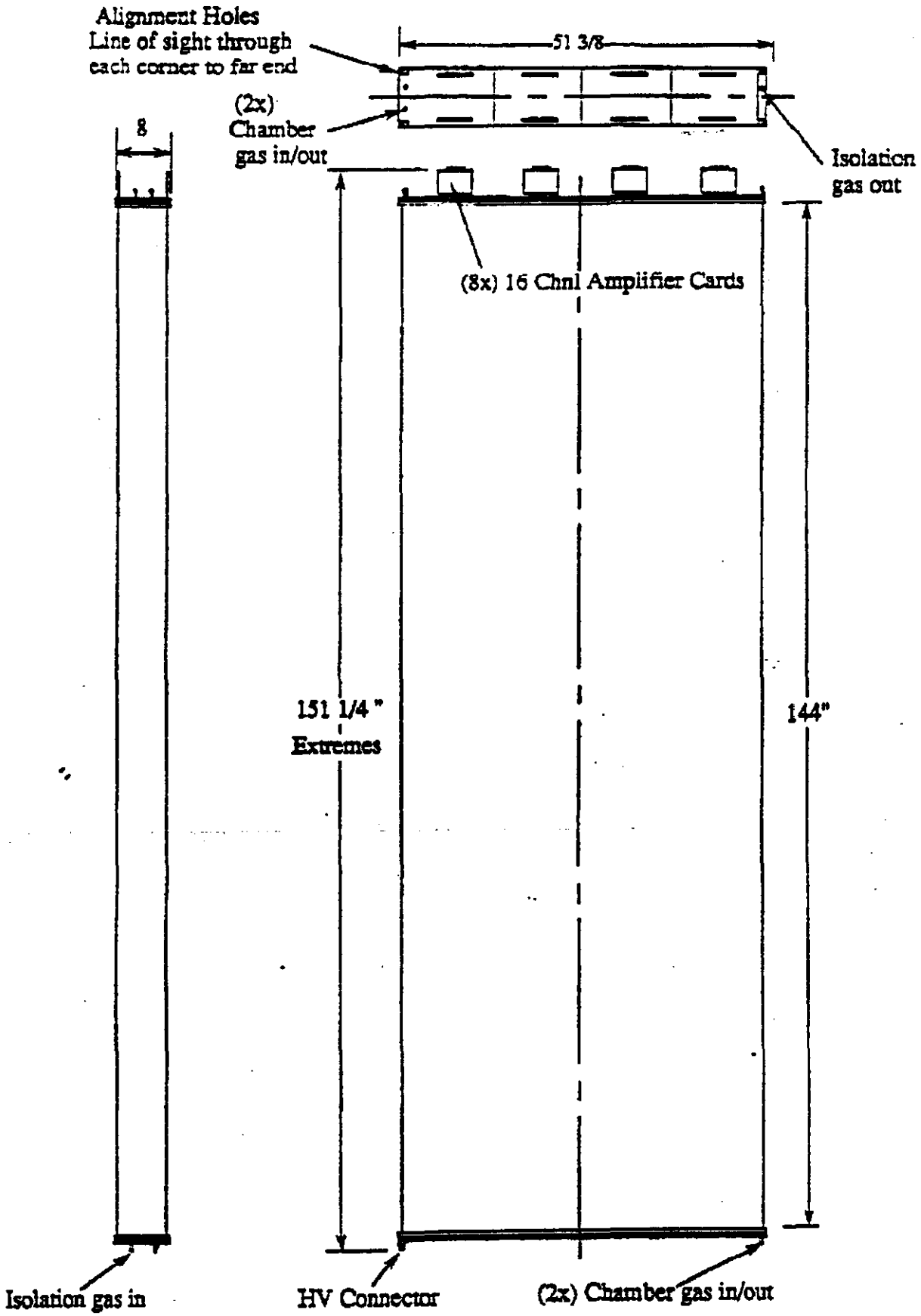

GEM PDT Prototype Assembly

HEP01-022-281-D R. Miller 5-14-92

Fig. 1

SEP-23-1992 16:09 FROM HIGH ENERGY PHYSICS TO 8121472868038 P.18

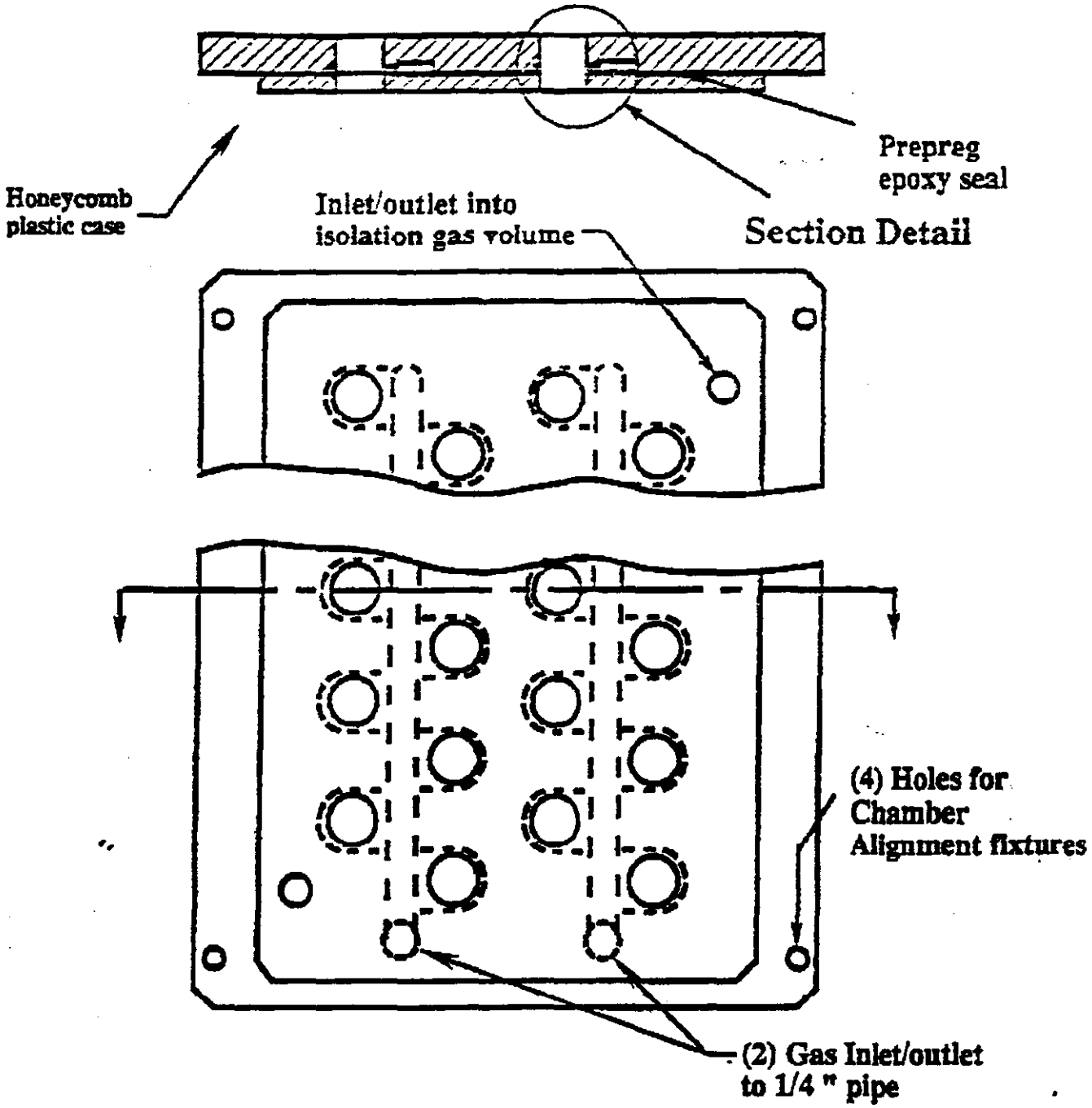

ITEM	PART NO.	DESCRIPTION	QTY.
PARTS LIST			

UNLESS SPECIFIED DECIMALS ±.005 FRACTNS ± ANGLES ±1.0° BREAK ALL EDGES DO NOT SCALE DWG	ORIG. R. Miller	4-13-92
	DRAWN	
	PROJECT Gem Muon PDT • PROTOTYPE	
	MATERIAL Alum. jig plate	

MICHIGAN STATE UNIVERSITY
HIGH ENERGY PHYSICS

TITLE Manifold Plate Assembly

DWG. NO. HEP01-022-274 REV. E SCALE 1:2

Fig. 2

SEP-23-1992 16:05 FROM HIGH ENERGY PHYSICS TO 81214766098 P.19

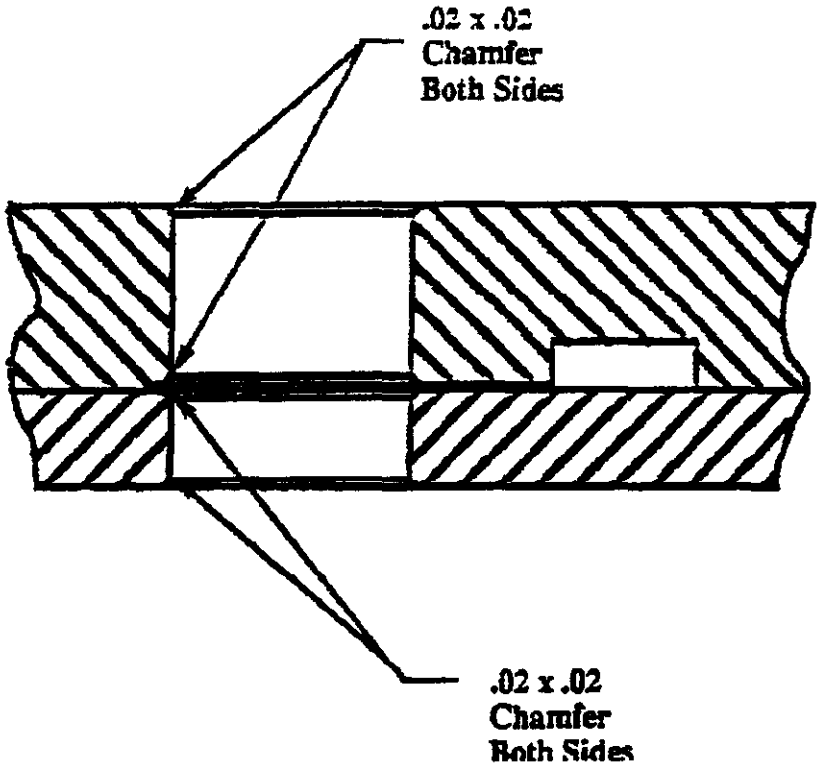

Manifold Plate : Section Detail

Fig. 3

SEP-23-1992 15:09 FROM HIGH ENERGY PHYSICS TO 81214708608B P.20

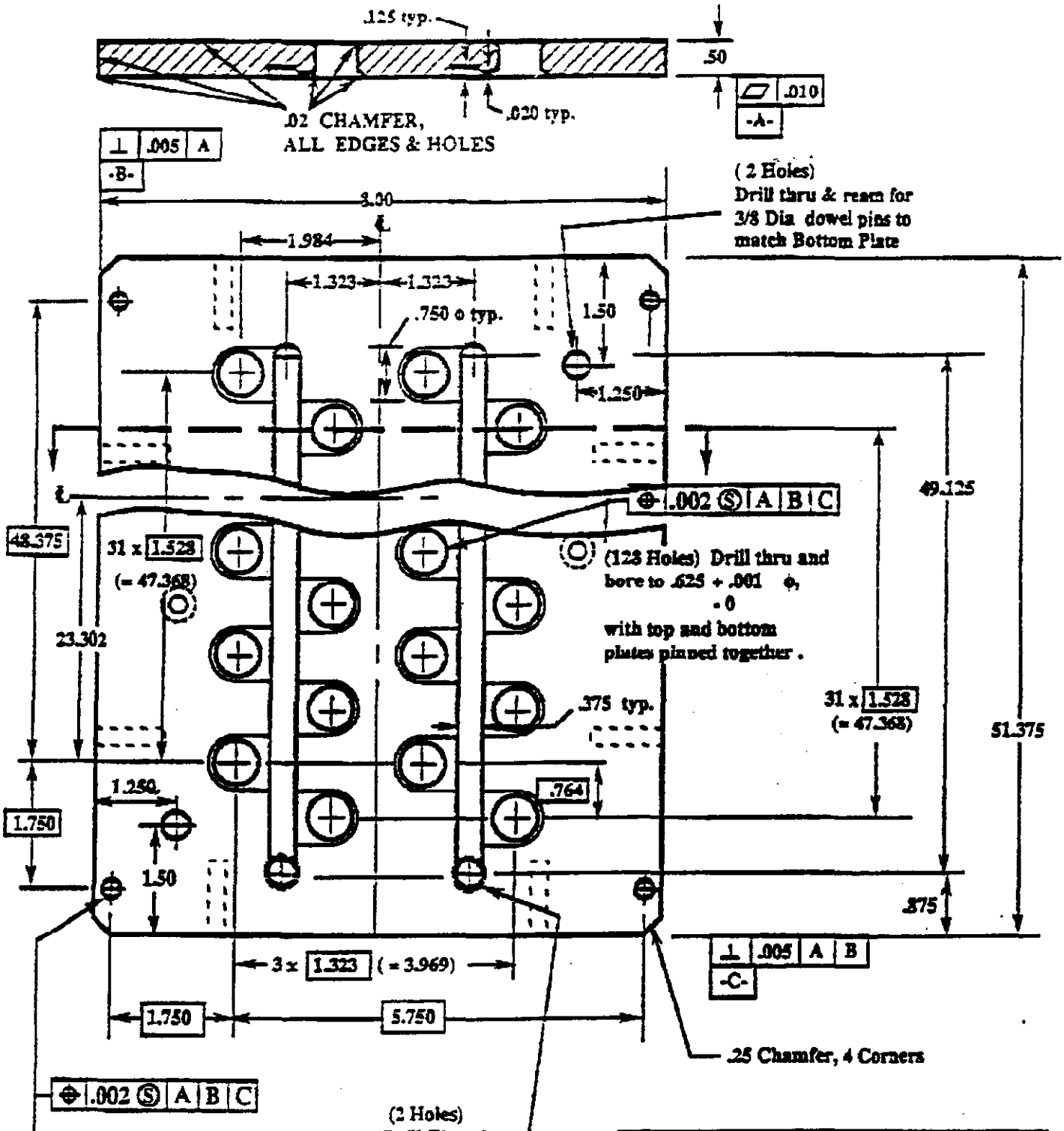

ITEM	PART NO.	DESCRIPTION	QTY.
PARTS LIST			
UNLESS SPECIFIED DECIMALS .005 FRACTNS ± ANGLES ±1.0° BREAK ALL EDGES DO NOT SCALE DWG		ORIG. R. Miller	4-13-92
		DRAWN	
		PROJECT Gem Muon PDT	
		MATERIAL 1/2 Alum Tooling Plate MIC-6	
MICHIGAN STATE UNIVERSITY HIGH ENERGY PHYSICS			
TITLE Top Mainfold Plate-Pattern A			
DWG. NO. HEP01-022-272-A		REV. E	SCALE 1:2

Fig. 4

SEP-23-1992 16:10 FROM HIGH ENERGY PHYSICS TO 8121472860 38 P.21

Manifold Plate Hole Placement

Aug. 4, 92

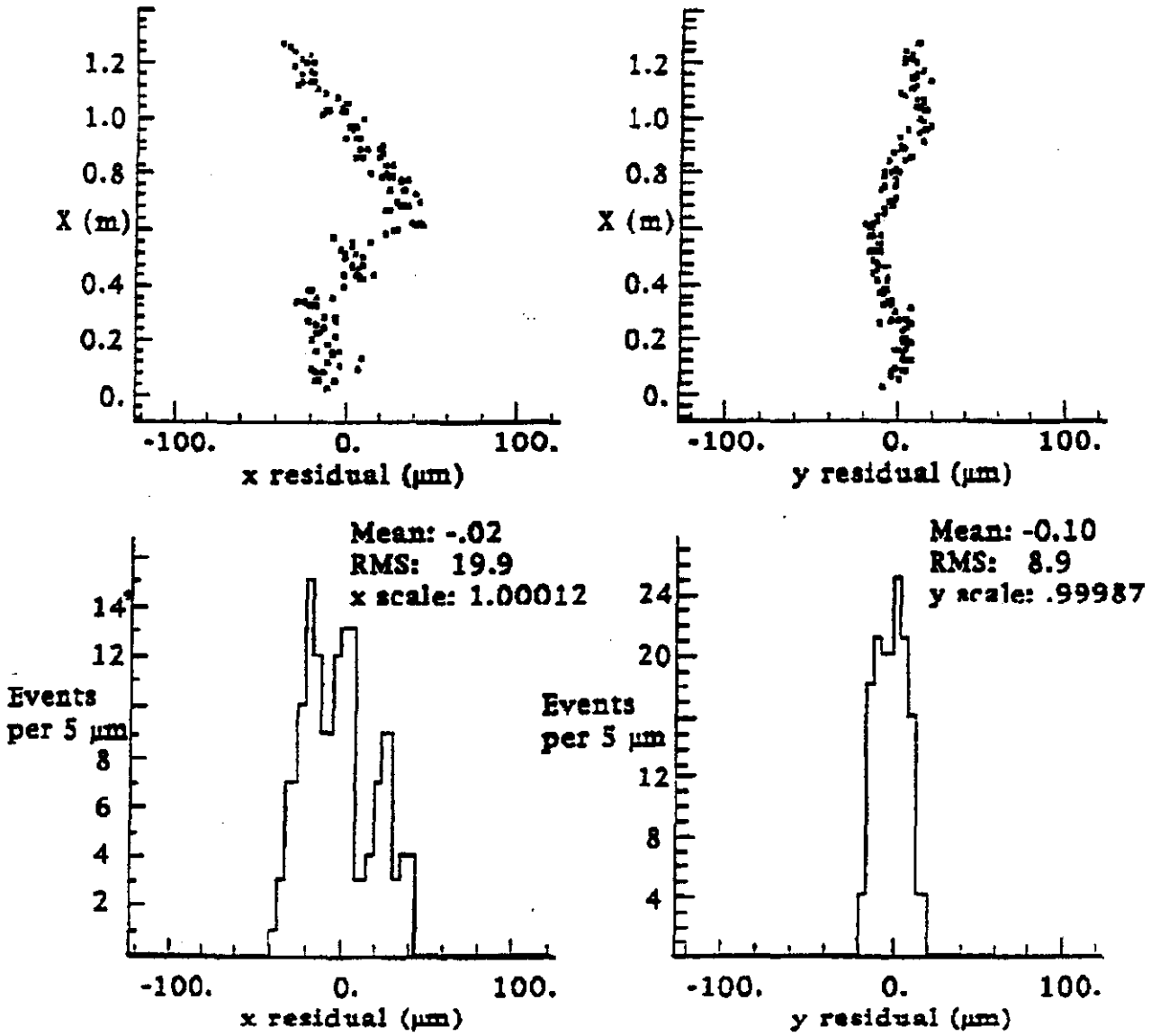

Fig. 5

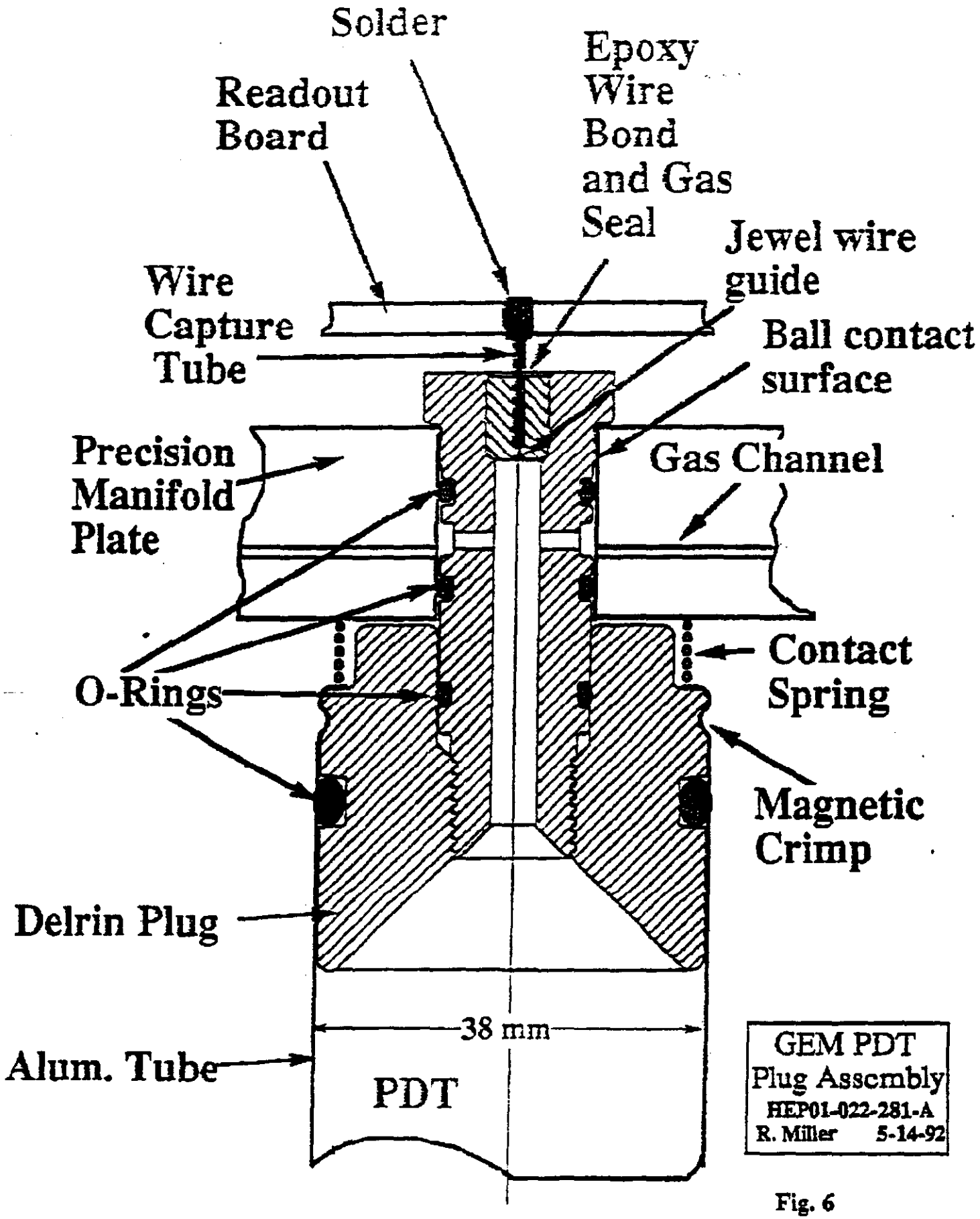
Solder
Readout Board
Epoxy Wire Bond and Gas Seal
Jewel wire guide
Wire Capture Tube
Ball contact surface
Precision Manifold Plate
Gas Channel
O-Rings
Contact Spring
Magnetic Crimp
Delrin Plug
38 mm
Alum. Tube
PDT
GEM PDT
Plug Assembly
HEP01-022-281-A
R. Miller 5-14-92

Fig. 6

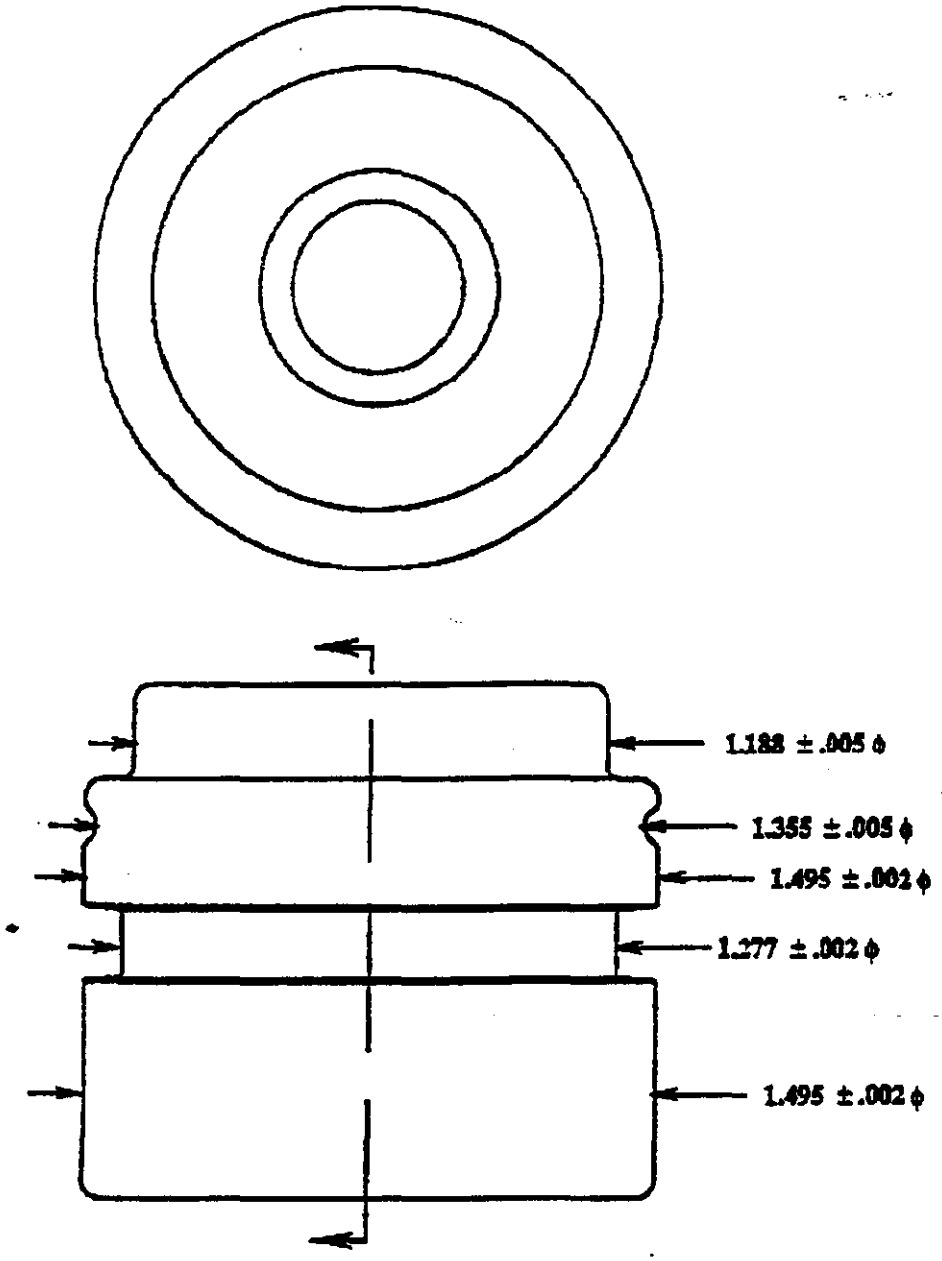

ITEM	PART NO.	DESCRIPTION	QTY.
PARTS LIST			
UNLESS SPECIFIED DECIMALS ±.005 FRACTNS ± ANGLES ±1.0°		ORIG. R. Miller	4-2-92
		DRAWN	
BREAK ALL EDGES		PROJECT Gem Muon PDT	
DO NOT SCALE DWG		MATERIAL Delrin 570	
MICHIGAN STATE UNIVERSITY HIGH ENERGY PHYSICS			
TITLE Tube Plug			
DWG. NO. HEP01-022-275		REV. A	SCALE 2:1

Fig. 7

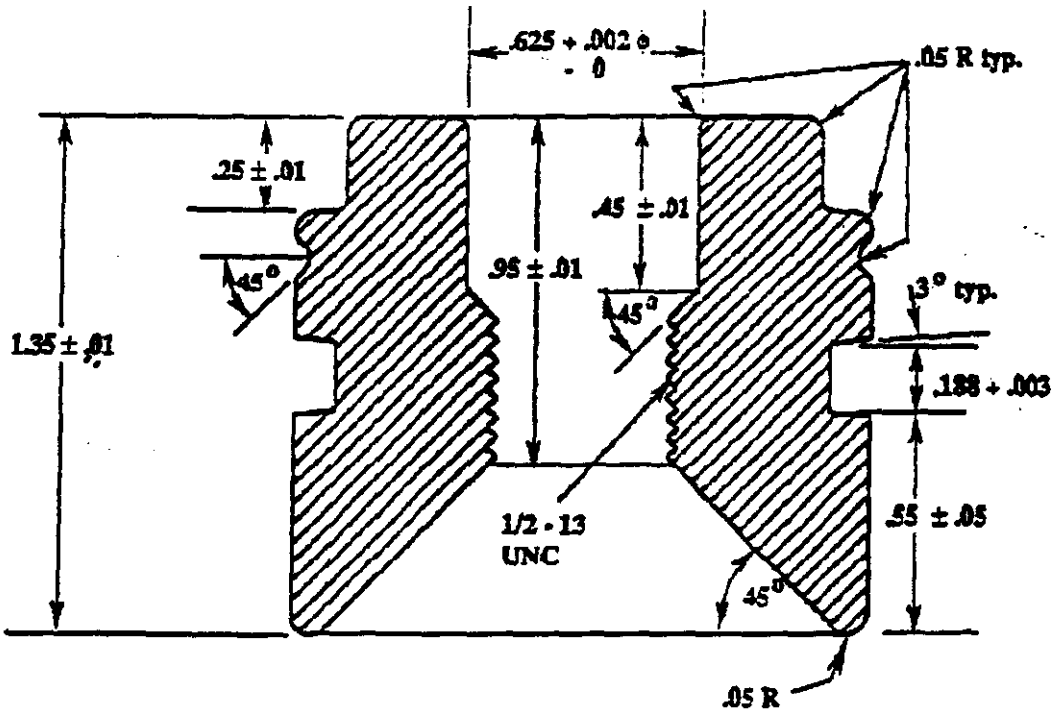

ITEM	PART NO.	DESCRIPTION	QTY.
PARTS LIST			
UNLESS SPECIFIED DECIMALS .005 FRACTNS ± ANGLES ±1.0°		ORIG. R. Miller	4-2-92
		DRAWN	
		PROJECT Gem Muon PDT	
BREAK ALL EDGES DO NOT SCALE DWG		MATERIAL Delrin 570	
MICHIGAN STATE UNIVERSITY HIGH ENERGY PHYSICS			
TITLE Tube Plug - Section			
DWG. NO. HEP01-022-275-S		REV. A	SCALE 2:1

Fig. 8

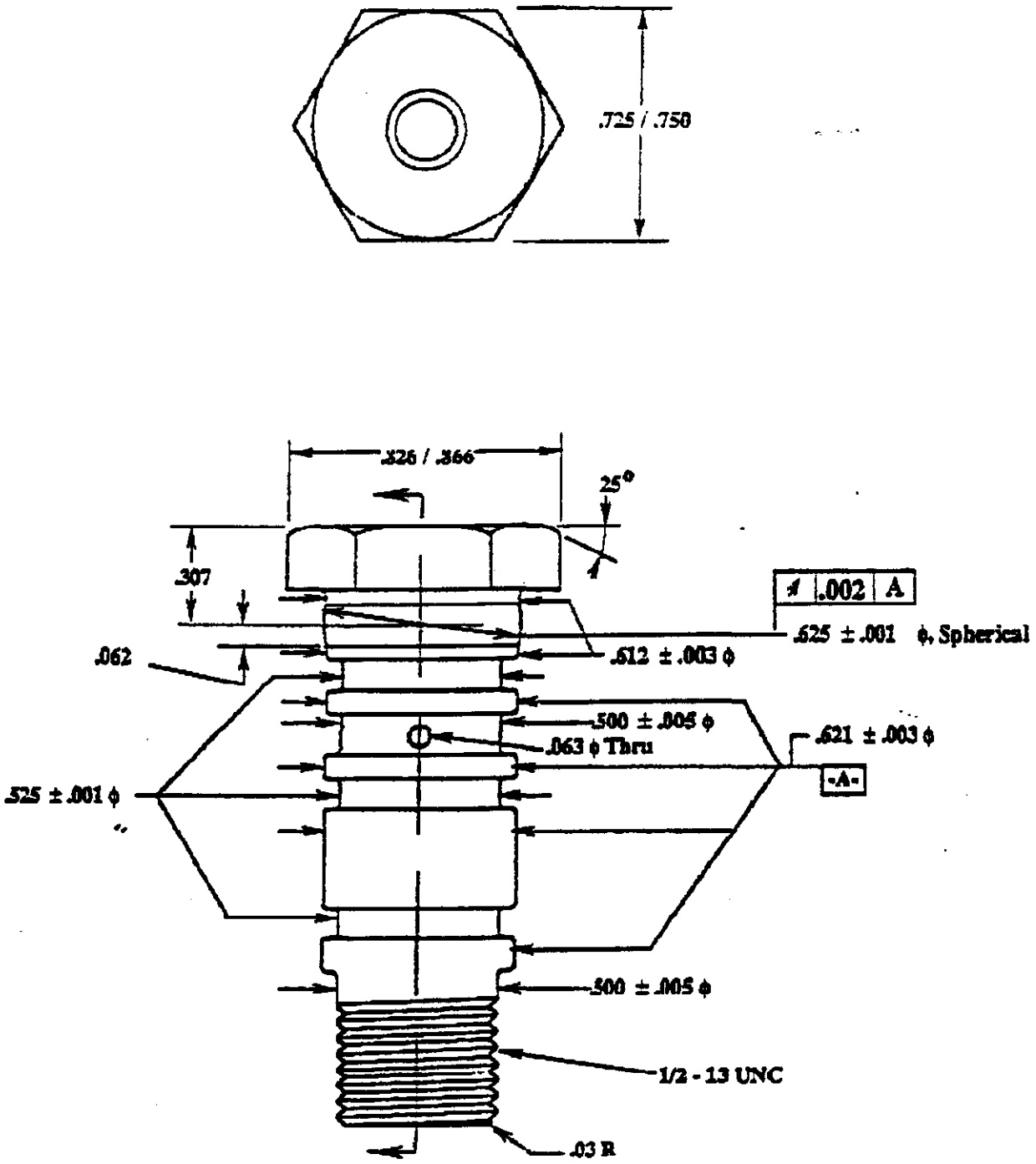

ITEM	PART NO.	DESCRIPTION	QTY.
PARTS LIST			
UNLESS SPECIFIED DECIMALS .005 FRACTNS ± ANGLES ±1.0° BREAK ALL EDGES DO NOT SCALE DWG		ORIG. R. Miller	4-2-92
		DRAWN	
		PROJECT Gem Muon PDT	
		MATERIAL Delrin 570	
MICHIGAN STATE UNIVERSITY HIGH ENERGY PHYSICS			
TITLE Plug Insert			
DWG. NO. HEP01-022-276		REV. A	SCALE 2:1

Fig. 9

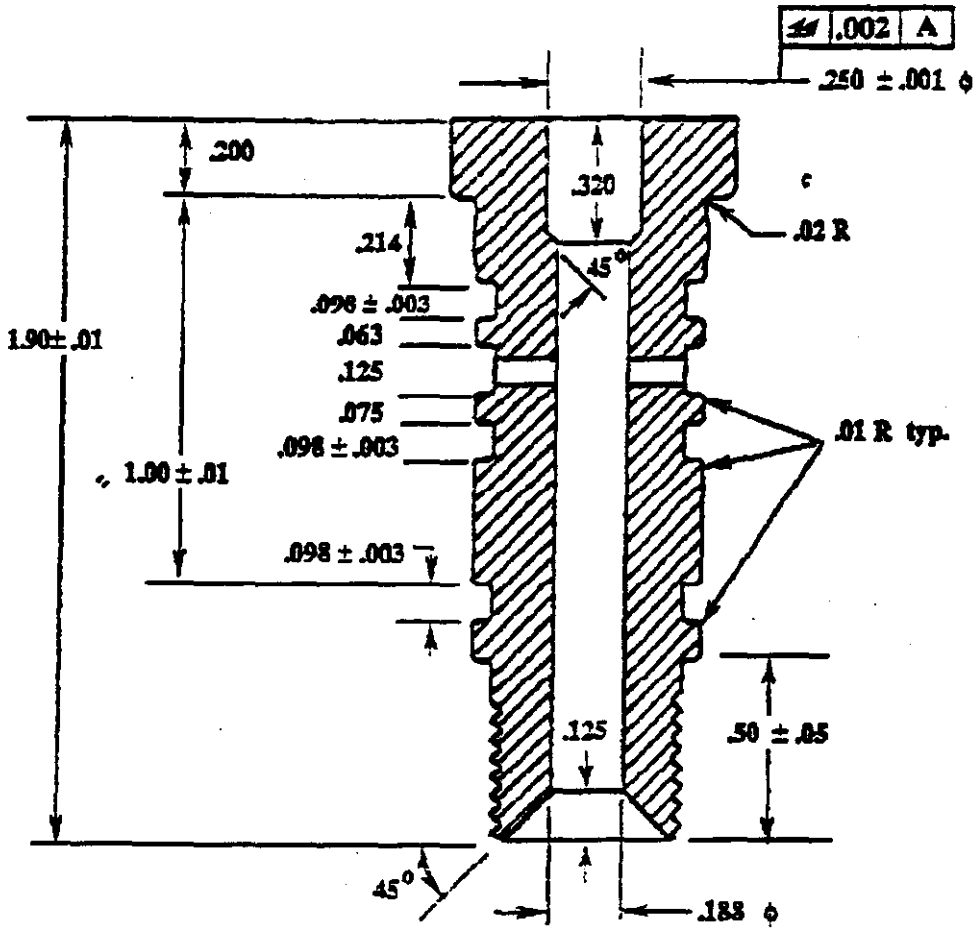

ITEM	PART NO.	DESCRIPTION	QTY.
PARTS LIST			

UNLESS SPECIFIED DECIMALS .005 FRACTNS ± ANGLES ±1.0°	ORIG. R. Miller	4-2-92
	DRAWN	
	PROJECT Gem Muon PDT	
BREAK ALL EDGES DO NOT SCALE DWG	MATERIAL Delrin 570	
MICHIGAN STATE UNIVERSITY HIGH ENERGY PHYSICS		
TITLE Plug Insert - Section		
DWG. NO. HEP01-022-276-S	REV. A	SCALE 2:1

Fig. 10

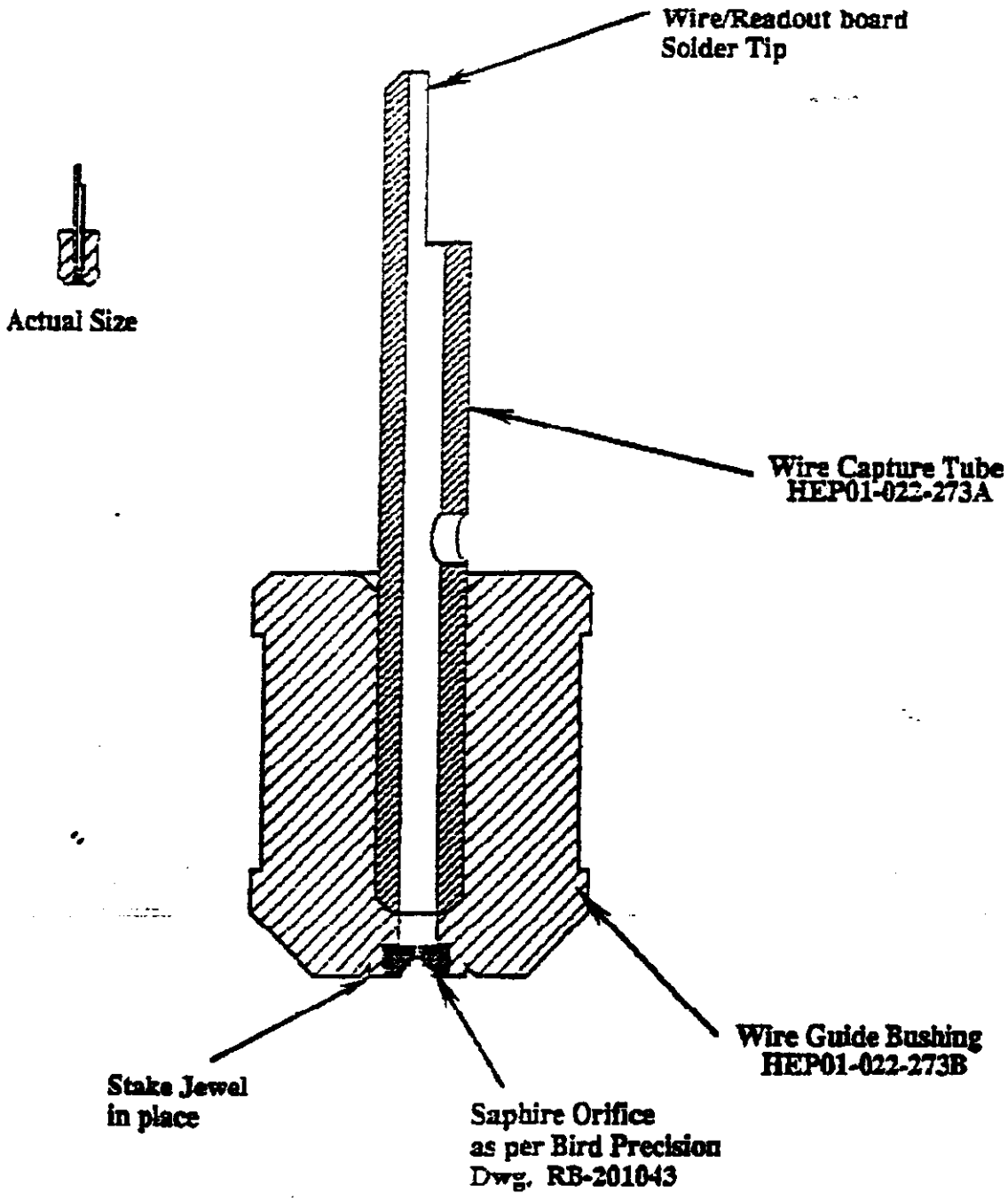

ITEM	PART NO.	DESCRIPTION	QTY.
PARTS LIST			

UNLESS SPECIFIED DECIMALS ±.005 FRACTNS ± ANGLES ±1.0°	ORIG. R. Miller	3.16.93
	DRAWN	
	PROJECT Gem Muon PDT	
BREAK ALL EDGES DO NOT SCALE DWG	MATERIAL	

MICHIGAN STATE UNIVERSITY
HIGH ENERGY PHYSICS

TITLE Sense Wire Guide Assembly

DWG. NO. HEP01-022-273C | REV. B | SCALE 8:1

Fig. 11

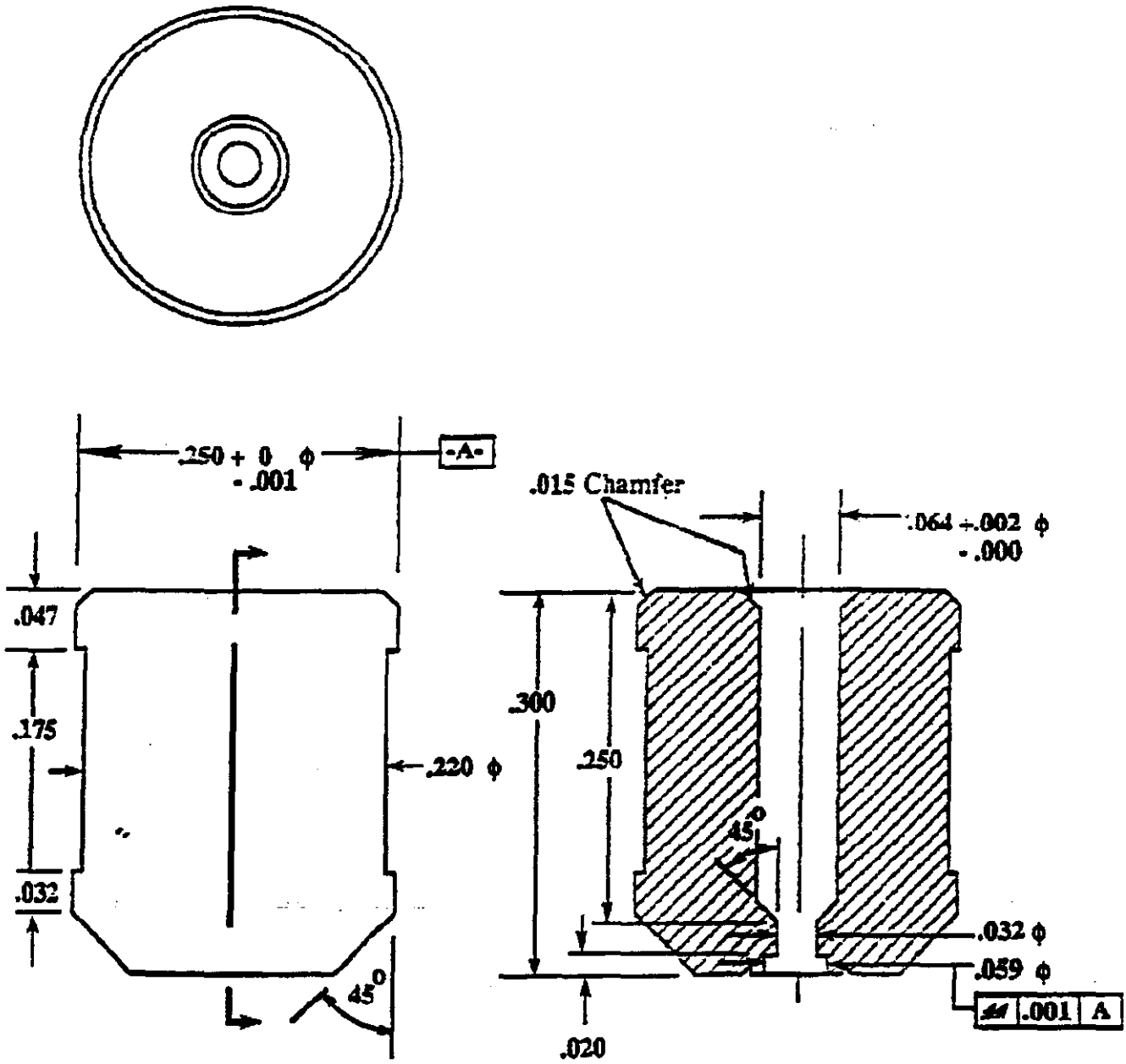

ITEM	PART NO.	DESCRIPTION	QTY.
PARTS LIST			
UNLESS SPECIFIED DECIMALS ±.005 FRACTNS ± ANGLES ±1.0°	ORIG. R. Miller		3-16-92
	DRAWN		
	PROJECT Gem Muon PDT		
BREAK ALL EDGES DO NOT SCALE DWG	MATERIAL Brass		
MICHIGAN STATE UNIVERSITY HIGH ENERGY PHYSICS			
TITLE Sense Wire Guide Bushing			
DWG. NO. HEP01-022-273B	REV. B	SCALE 8:1	

Fig. 12

SEP-23-1992 15:13 FROM HIGH ENERGY PHYSICS TO 8121470850B8 P.29

RB-201043 REV:

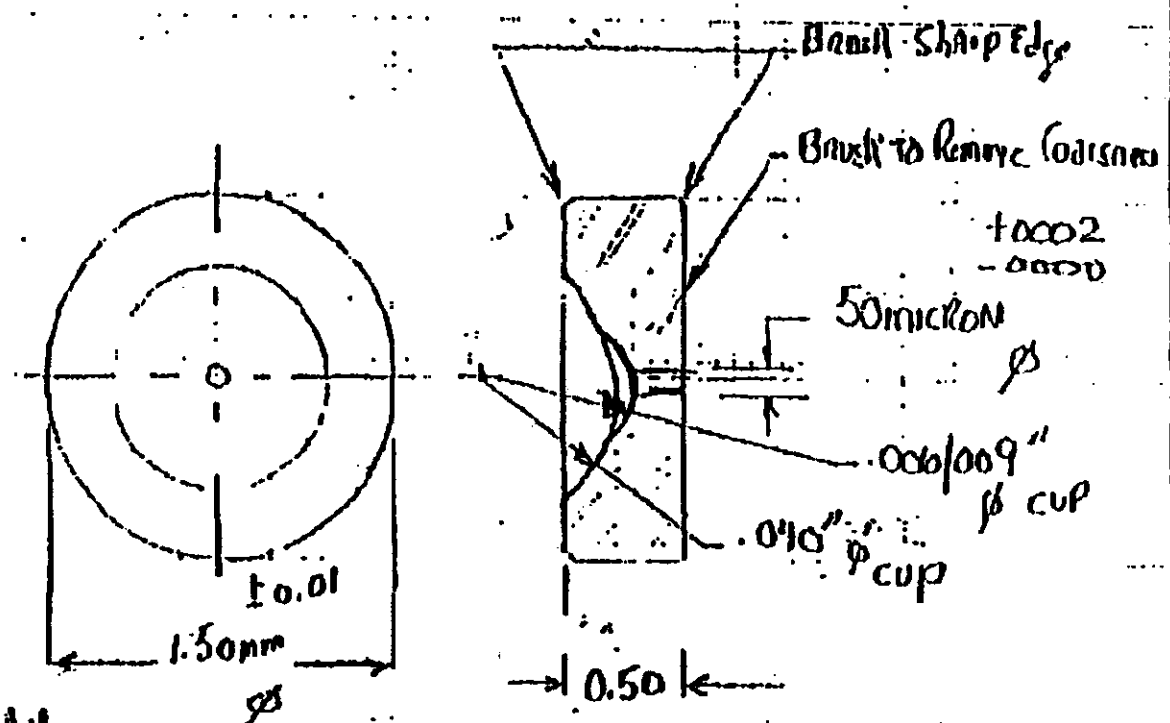

Holes:
Sapphire or Ruby
No Polish Required, Brush Face to Remove Coarseness
Id Smooth Only
Concentricity Id to O.D. within 10 microns

TOLERANCES: FRACTIONS / .X / .XX / .XXX / ANGLES	CONCENTRICITY OF ID TO OD ____ TIR ____ BURR FREE 10 MAG.	DWG (1)	MAT'L Ruby or Sapphire	BIRD PRECISION
		SCALE 2.4:1/R	DRAWN Cathy Smith	
		DATE / /	TITLE Orifice	RB-201043 REV:

Fig. 13

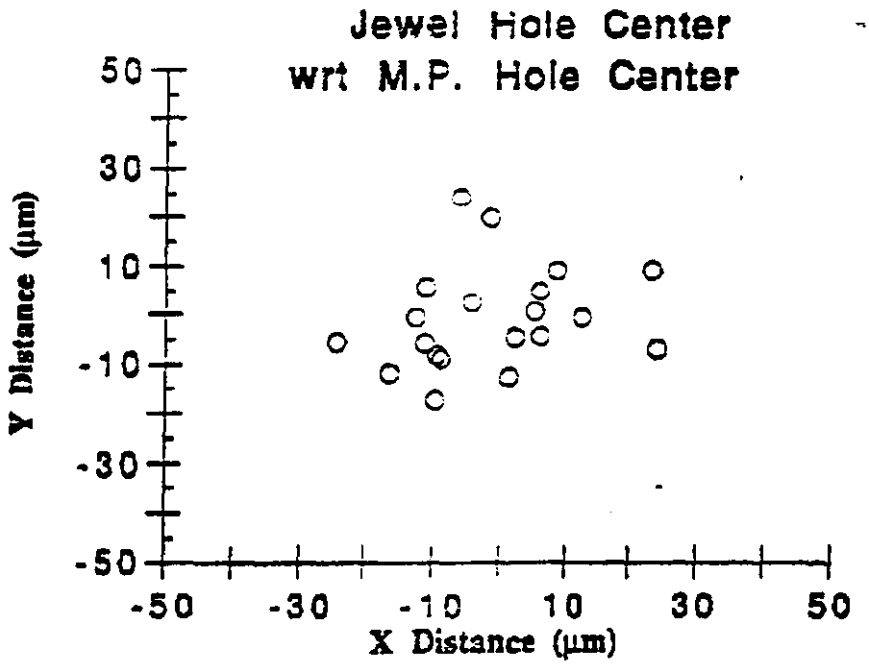
Jewel Hole Center
wrt M.P. Hole Center
Y Distance (μm)
X Distance (μm)
50
30
10
-10
-30
-50
-50
-30
-10
10
30
50

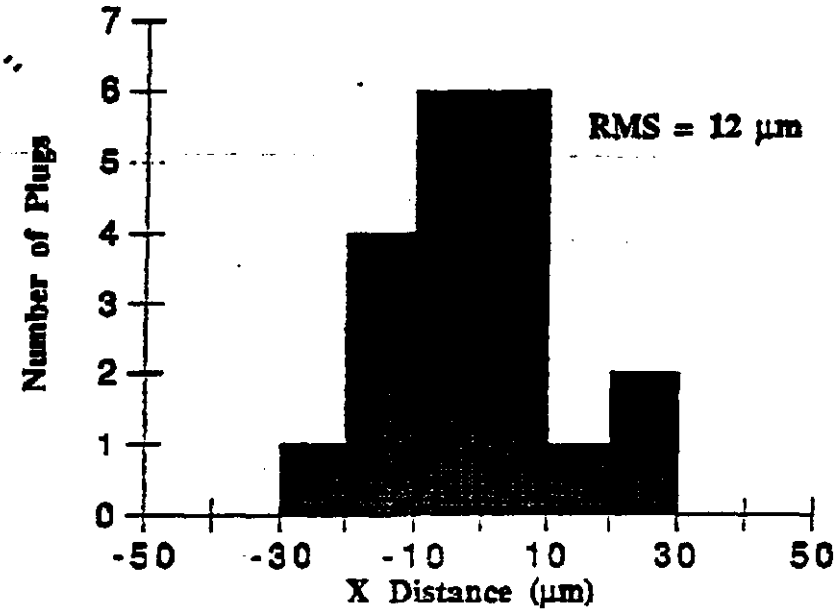
RMS = 12 μm
Number of Plugs
X Distance (μm)
7
6
5
4
3
2
1
0
-50
-30
-10
10
30
50

Fig. 14

Option For Wire Location Pin

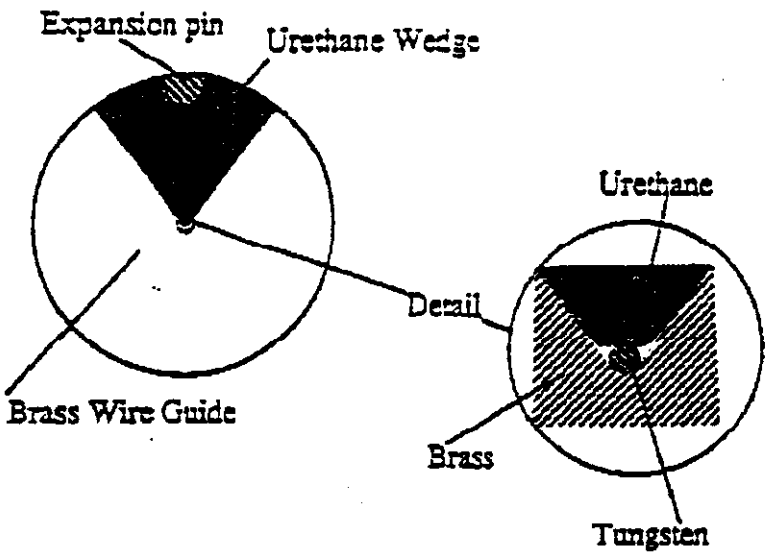

Option For Wire Locating Comb

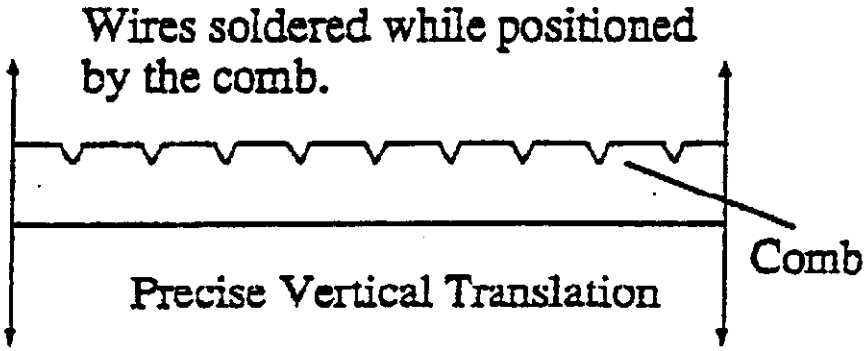

Fig. 15

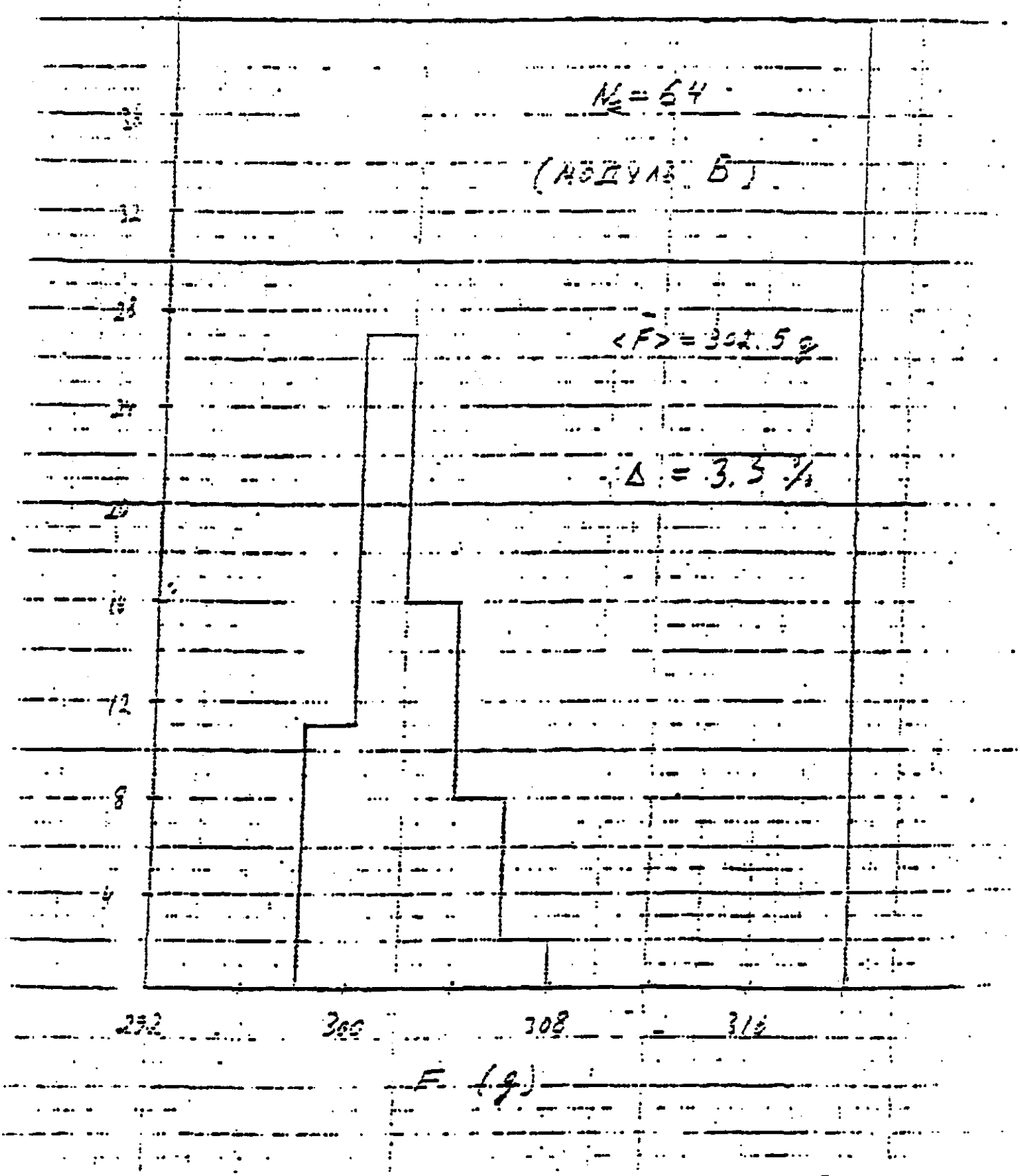
$N_c = 64$
(ABBVAS B)
$\langle F \rangle = 308 \pm .5$ g
$\Delta = 3.3\%$
32
28
24
20
16
12
8
4
292
300
308
316
F (g)

Fig 16

Appendix D - Resistive Plate Chamber engineering report

RESISTIVE PLATE CHAMBER ENGINEERING REVIEW

Irwin A. Pless, Craig R. Wuest

Massachusetts Institute of Technology
Lawrence Livermore National Laboratory

September 15, 1992

A. Design

1. General Design Concept

Resistive Plate Chambers (RPCs) have been in operation in experiments throughout the world since 1981. The current standard (Italian) design is two meters long by one meter wide with a sensitive gas gap of 2 millimeters. There are no wires or conductors anywhere in the sensitive region. The walls of the chamber - in contact with the gas of the sensitive volume - consists of a semi-conductor (Bakelite, for example) with a bulk resistance of about 10^{11} ohm-centimeters. An ionizing particle passing through the sensitive volume (2 m x 1 m x 2 mm) breaks down the gap and creates an electrical discharge. This discharge is very fast (a few nanoseconds). The discharge is capacitively coupled to pick-up strips which are located outside the semiconductor walls of the gas cell.

When the strip is terminated with a 50 ohm load the voltage pulses across the termination are typically 0.5 volts high with a rise time of 2-3 ns. A typical full width at half maximum (FWHM) is about 10 ns and the measured rise time jitter is less than 1.4 ns. Figure 1 is a schematic of the "standard" Italian RPC.

RPCs are used to perform the fast triggering necessary to identify the SSC beam bunch crossing associated with a particular physics event, as well as the muon momentum trigger (Level 1 trigger) for identifying muons of sufficient momentum. Bunch crossing identification is performed using straight line fits of tracks registered on projective strips oriented in the phi direction (non-bend plane), with widths of 3.9, 6.5, and 8.9 cm, for inner, middle, and outer super-layers, respectively. Muon momentum measurements are made using strips of 1.3 cm width oriented along the Z direction (bend plane). The strip widths are chosen to provide the necessary precision for track identification. In the case of the bunch-crossing identification, the wide strips are all that is necessary to identify a straight line track. In the case of the muon momentum identification, 1.3 cm strips are sufficient to provide sagitta measurements of the necessary precision to identify muons of particular momenta, for example, > 10 GeV/c, or > 50 GeV/c. This momentum identification is based on the measurement of the muon passage through a set of strips in the three super-layers and the strip displacement from a straight line as projected from the origin through the outer super-layer strip.

Identification of tracks in an RPC is a simple matter of reading the induced charge on the cathode strips, identifying the time of arrival of the charge, and the spatial coordinates of the strip. The RPC operation (spark chamber), implies that it is essentially a digital device. The critical conditions for RPC operation are 1) stability of materials used in the RPC,

2) stability and uniformity of the gas supplied to the RPC, and 3) uniformity of the gas gap within the RPC that gives rise to the spark breakdown and the subsequent induced pulse on the pick-up strips.

The RPC system, being a somewhat less mechanically precise system than the proposed drift tube systems, uses much simpler manufacturing methods than the precision drift tube technologies being considered for the GEM Muon System.

2. Standard RPC

The Bakelite plates in a standard Italian RPC are 2 mm thick. As stated above, the gas gap is also 2 mm thick. The edges are sealed with a strip of PVC 1 cm in width. The dimensional tolerances are modest. The thickness of the Bakelite plate is irrelevant for the proper operation of the RPC. The combined flatness and spacing requirements between the plates are $\pm$ 200 microns. This requirement is trivial to maintain over arbitrarily large areas by using PVC spacers 2 mm thick and 10 mm in diameter spaced on a 10 cm grid. The 2 m x 1 m chambers have been tested by raising one corner with respect to the two opposite corners by 10 cm. There was no measurable change in the performance in this warped geometry as compared to the performance when the chamber is flat. The chambers have been stood up with the 2 m edge vertical and then allowed to fall flat. After this mishandling the chamber worked exactly as before the fall.

Hundreds of these chambers have been produced and are operating in experiments all over the world. A set of these chambers have operated at Frascati for 7 years. Such chambers are currently being used in E-771 at Fermilab. Recently L3 at CERN has ordered 400 of these chambers from General Technica, Colli, Italy, which is a company that is a commercial supplier of RPCs.

This history has been related here to emphasize that we are not talking about a new technology, but rather a mature technology which is well understood and for which the manufacturing technology has already been transferred to industry.

3. Weight and other Design Parameters

Figure 2 is a sketch of our two gap RPC design. As stated in the General Design Concept section, there are spacers that maintain the sensitive gas gap distance. These spacers produce about a 1% dead area. The two gap design we have chosen eliminates this 1% dead area by having two gas gaps with the spacers in one gap staggered with respect to the spacers in the second gap. This double gap constructions also has the virtue of providing practically 100% redundancy for the RPC system.

Table 1, GEM RPC Specifications contains the detailed breakdown of the weights. Note that we have assumed 0.015" (380 micron) thick Bakelite plates rather than 2 mm, as this choice of thickness could increase the repetition rate (at 95% efficiency, typical for an RPC operating at plateau) from ~100 Hz/cm^2 to ~1000 Hz/cm^2.

Note that from Table 1 one can calculate that the weights of the individual chambers are 70 lbs, 104 lbs, and 146 lbs for nominal radii of 4.0, 6.0, and 8.0 m (inner, middle and outer super-layers), respectively.

Hence any chamber can be easily handled by four technicians (one for each corner) without the use of cranes or special hoisting apparatus.

Table 1. GEM RPC Specifications

Coverage:	100% - Z, 95% - Φ		
Areal Mass:	projected thickness = 0.7% X_0		
Nominal Radius (m):	4.0	6.0	8.0
# of chambers	64	96	128
Width (cm)	148.5	239.0	329.6
Length (cm)	330.0	360.0	380.0
Total Length	631.9	1042.1	1475.0
# Bend-plane strips:	114	183	253
# Non-bend-plane strips:	166	166	166
Width of bend-plane strips (cm):	1.3	1.3	1.3
Width of non-bend-plane strips (cm):	3.9	6.5	8.9
Weights (lbs):			
Bakelite:	1877	4943	9593
Aluminum perimeter frame:	1049	1472	2304
Cable:	385	641	963
Connectors, brackets:	1160	2855	5795
TOTAL/Super-layer	4471	9911	18655

TOTAL WEIGHT (TONS) 16.5

4. Wire or Strip Support

As stated previously, there are no sense wires in this technology. The pick-up strips are formed on an aluminized mylar substrate. There are several well-known technologies for this purpose. The simplest method utilizes a shadow mask as the mylar is aluminized. In addition, etching, grinding, and sand-blasting are all viable techniques for creating the strips. The required precision for the strips is $\pm$ 100 microns. Once the mylar is glued into the RPC stack, the strip positions need to be known with respect to an outside fiducial with a precision of $\pm$ 2 mm.

Strips are an integral part of the mylar, therefore, the strip support is the mylar base. The mylar, in turn, is part of the RPC laminate.

5. RPC Gas System

LLNL is designing the RPC gas system. The envisioned system is a low-flow, simple state-of-the-art recirculating system using standard technology that has been tested and proven for many years. All components are standard, off-the-shelf items.

The RPC muon trigger system covers a total 2743 square meters of surface area in the three muon super-layers and contains 0.4 cm total thickness of gas layers. This corresponds to a total gas volume of 10.9 cubic meters. Typical RPCs operate with a gas flow rate of about 10% of their volume per hour or about 1.1 cubic meters per hour (18.3 liters per minute) for this system. The RPC gas system is designed to provide this flow rate for an accurately mixed combination of gases.

Previous RPC systems have run successfully using a gas mixture consisting of 66% Argon, 32% n-butane and 2% freon. It is unlikely that this mixture of gases will be allowed at the SSC because of its flammable nature. Alternative gas mixtures are being explored in R&D. One candidate gas is a non-flammable mixture of 49% CO_2, 49% CF_4, and 2% freon.

Figure 3 shows one idea for the design of a gas system for mixing four different gases. This system is designed for explosive mixtures but is entirely suitable for non-explosive mixtures as well. Component gases are introduced into separate lines and combined in accumulators using precision mass-flow controllers and proportioning valves. All valves and controls are designed for fail-safe operation, e.g. valves will fail in closed positions and excess pressures are bled off into special vent lines into accumulators in the event of a power outage. Much of the gas system is designed to allow the proper inlet and outlet pressures to the precision flow controllers for proper metering of gas.

Mass flow controllers such as the MKS 1159B series are used. A separate mass flow controller, with a nominal range suitable for the particular gas, is used for each component gas. These controllers are interfaced to 8 channel power supply/readout modules with an IEEE-488 (GPIB) computer interface.

Figure 4 shows a sketch of a gas delivery system that could be used for the RPC system. Each RPC module will have gas inlets and outlets (1, 2, and 3 each, for inner, middle, and outer super-layer modules, respectively). The inlet and outlet number increases from the inner super-layer to the outer super-layer because the RPC module width increases by about 1 meter per super-layer. To insure good flow characteristics, while allowing for reasonable pressures, the gas system splits the flow into the outer and middle super-layers and circulates from the central membrane outward. The inner super-layer circulates the gas from end to end. This insures uniform gas flow in different size modules. All tubing and fittings are metal (copper or stainless steel tubing, stainless steel or regular steel Swage-Lok fittings) for fire safety.

Exhaust gas will not be allowed to be vented to the atmosphere because of the admixture of freon. Exhaust gas will be fed into a gas recovery system whose design is yet to be determined. This system will likely contain an accumulation tank and a compressor system that takes the exhaust gas and compresses it through various pressure stages to condense the lowest vapor pressure gases. In this case the first stage condenses freon gas to a liquid, which is collected for disposal or recirculation. Likewise, the remaining CO_2/CF_4 mixture is further compressed with the CO_2 being the next gas to liquefy and be collected. All gas components can be reintroduced into the input stage or properly discarded at this point.

6. Chamber Structure

The chamber structure will follow the well-tested and proven Italian design. The chamber will be made up of various layers glued together to form a single self-supporting laminated plate. Spacers, consisting of 2 mm thick, 10 mm diameter PVC disks serve three functions. First, they mechanically separate the two Bakelite plates and keep the plates flat with respect to one another by being placed on a 10 cm square grid. Second, they insulate the resistive plates from each other. Third, they transmit the mechanical stresses from one side of the plate to the other.

The edges of the RPCs will be sealed by gluing 1 cm wide, 2 mm thick PVC strips between the Bakelite plates. This stiffens the edges mechanically so that the plate is self-supporting. In addition, there will be an aluminum U-channel frame that will encompass the chamber on all four sides. This aluminum U-channel frame will be glued to the completed RPC body. The purpose of this frame is, first, to protect the edges of the RPC during shipping, handling and installation; second, to stiffen the edges so that the RPC can be mounted by four corners (if necessary); and third, to furnish the base to mount the high voltage connectors, the gas connectors and the LEMO signal connectors.

All the above technology is well understood and presents no engineering or manufacturing problems. There is a problem of availability of wide sheets of Bakelite. Bakelite sheet comes in arbitrarily long lengths, but the standard width is 48 inches. This concern will be addressed in an upcoming section.

7. Impact on truss structure design

The weight of the largest single RPC chamber is 146 lbs. This weight should have a negligible impact on the truss structure design. Because the dimensional tolerances of the RPC are so loose, the RPC can be fastened directly to the drift chamber systems. Hence, they should introduce no geometrical impact on the truss structure design.

8. Super-layer configuration

The RPC system is broken up into three levels: the RPC itself, the RPC chamber, which encloses two layers of the RPC, and the RPC super-layer, of which there are three; inner, middle, and outer. The inner, middle and outer RPC super-layers form a complete RPC sector, with 16-fold symmetry in phi, and mirror symmetry about the z-axis of the GEM detector. Figures 5 - 9 show various sketches and drawings of the system.

The RPC itself consists of two layers of detectors, slightly staggered within a single chamber enclosure. This staggering is necessary to prevent trigger inefficiency due to the presence of spacers and other hardware that contribute to dead area in the RPC.

The RPC chamber is a box which encloses the two layers of RPC and is envisioned as an aluminum frame with the RPC laminates glued to the frame. RPC chamber widths and lengths vary 148.5 cm x 330 cm, 239.0 cm x 360 cm, and 329.6 cm x 380 cm, for inner, middle, and outer super-layer chambers, respectively.

Each super-layer consists of slightly overlapping RPC chambers, again, to increase trigger efficiency. The inner, middle and outer super-layer sectors are made up of two, three and four overlapping RPC chambers, respectively.

In summary, there are 64 inner sector chambers, 96 middle sector chambers and 128 outer sector chambers with a total projected surface area of 2743 square meters.

Table 1 provides estimates the weight of the chambers in each super-layer sector including the RPC itself, the RPC chamber enclosure with aluminum perimeter frame, RPC perimeter cable weight with an additional 10% added in each super-layer for connectors, brackets, etc.

Summarizing, the inner super-layer weight is 4471 lb., the middle super-layer weight is 9911 lb., and the outer super-layer weight is 18655 lb. The total weight for the RPC subsystem is 16.5 tons for the entire GEM Detector RPC system, or about 1 ton per sector.

9. Electronic Packaging Requirements

As presently designed, there will be no electronics inside the magnet. All that is required is high voltage connectors, gas connectors and LEMO connectors for strip signals to be carried on RG-174/U 50 ohm coaxial cable.

10. Size Limitation

As already mentioned, the widths of the RPC presents a concern. Bakelite sheet comes in arbitrarily long lengths but in standard widths of 48 inches. Since the total amount of material needed by GEM is small, it is unlikely that we can afford to purchase special machinery for our widths. However, this avenue will be explored. Fortunately, due to the natural design of an RPC, it is very simple to "splice" several narrower sheets to create one "wide" sheet.

As an example, we look at the largest chamber, which is 329.6 cm wide Since our standard Bakelite is 121.92 cm wide, two splices are needed. Figure 10 illustrates a possible splice design. The scale is about 10:1.

The critical feature of the splice is that it is recessed into the Bakelite plate. The two edges facing the gas are hand-sanded to remove any burrs. As in the standard construction of RPCs, all inner surfaces are coated with linseed oil after assembly. This oil is quite viscous and will fill in the 400 micron or so crack and cover any glue that oozes up through the crack. A visual inspection will be made to insure that the glue does not protrude above the surface of the Bakelite. This will be controlled before the chamber is laid out. Note that the splices on the upper and lower plates do not line up so that the distortion of the electric field in the region of the splice is kept to a minimum. Note also that the electric field at the splice is somewhat lower than the normal electric field. This has two consequences. The first is that there is a smaller likelihood of a field breakdown in the vicinity of the splice. Hence the splice should not be a source of noise. The second is that the efficiency will be somewhat lowered in the neighborhood of the splice. If we assume that the efficiency is zero for the 400 microns of each of the two splices, we find this corresponds to a loss of 0.02% efficiency of the overall chamber. This is totally negligible. Of course there will be the need of special jigs and tooling to make these splices, but this is a very straight-forward manufacturing problem that contains no basic engineering difficulties.

11. Utility routing

As noted above, the only utilities for the RPC are the high voltage, gas, and signal cables. The high voltage and gas require two high voltage cables per chamber and two, four or six gas lines per inner, middle, and outer chamber, respectively. These obviously present no routing problem whatsoever.

However, the signal cables do present a problem. This problem was discussed in detail at the 22 January, 1992 Muon Group Meeting at SSCL in Dallas. The following paragraphs summarize that presentation.

Note that in this report it is assumed that RG58/U, 0.193" diameter coaxial cable would be used. We have since decided to use RG174/U coaxial cable, which has a diameter of 0.101". Therefore each linear routing dimension of the 22 January report can be reduced by a factor of 0.52. For the square geometry in the cable harnessing, we will have bundles with cross sections 2.7", 3.9", and 8.3" on a side. For the rectangular geometry we will have cable bundles of 1.1" thick with widths of 8.8", 14.7" and 66". Either the square geometry or the rectangular geometry can be accommodated in the current truss structure design. The choice will depend on multiple scattering studies. The square geometry has moderate multiple scattering over a few inches, while the rectangular geometry has a large multiple scattering over 1.1 inches.

12. Timing and trigger widths

If we collect all signals from the strips in one corner of the chambers and match cable propagation speeds to strip propagation speeds then signals are matched in time when they arrive at the chamber corner. At the Level 1 trigger, we know the beam crossing to better than 12 ns: 8 ns due to the 1.49 m length of the strip and an estimated 4 ns due to the rise time jitter of the RPC pulse. This latter number has to verified by R&D, however, measurements made on the 1 m strips of the Italian RPC indicate time jitter of about 1.4 ns.

Referring to Figure 11 a,b; at the time of the first level trigger, the identity of the X and Y strips are known. At this point, one can calculate the beam crossing time to an accuracy of the rise time jitter of the RPC. For track 1, the signal from the outer layer arrives 9 ns after the signal from the inner layer and 4.5 ns after the signal from the middle layer. For track 2, the signal from the outer layer arrives 13 ns before the signal from the inner layer and 6.5 ns before the signal from the middle layer. Hence the trigger widths on the outer layer must be 13 ns long, while the trigger widths on the inner layer must be 9 ns long and the trigger widths on the middle layer must be 6.5 ns long.

The first question with respect to the hardware is how does one get the signals out to the common electronics point? In our case we propose to bring the signals out along the edge of the RPC layers at the layer level and along the 60 degree sector-edge line to the outer layer for the inter-layer connections. For each layer we have 161 cables running along the edge of the layer. Using RG-58 cable, this corresponds to a bunch 5.8 inches on a side. For the run from the inner layer to the central layer we use 274 cables. This is a cable bundle 7.5 inches on a side. For the run from the middle layer to the outer layer we have 1,264 cables. This cable bundle is 16 inches on a side.

Alternately, we can run all cables in a flat package two inches wide. This would give widths for 17, 28.2, and 128 inches wide for along the layer, from the inner layer to the middle layer, and from the middle layer to the outer layer, respectively

13. Failure tolerance

As stated previously, the RPC is a very rugged reliable device without sense wires or regions of high fields. However, failures do occur. In case of a failure one half of the double RPC would fail. Because of this possibility, we operate each RPC gap as a separate chamber. The loss of one RPC gap means a decrease of efficiency of 1%. This is negligible from any practical point of view. Therefore we can state that the RPC system is, for practical purposes, 100% redundant and that any single failure has a negligible effect on the practical efficiency of the system.

Another way of looking at this situation is to suppose one gap fails per year. This is more than two orders of magnitude higher failure rate than is indicated by our current experience. Under this assumption one can show that the probability of two gaps failing in the same RPC chamber in ten years of operation is less than 10%.

B. RPC Manufacture/assembly

1. Manufacturing approach/philosophy

As stated in the introductory section, identification of tracks in an RPC is a simple matter of reading the induced charge on the cathode strips, identifying the time of arrival of the charge, and the spatial coordinates of the strip. The RPC operation (spark chamber), implies that it is essentially a digital device. The critical conditions for RPC operation are 1) stability of materials used in the RPC, 2) stability and uniformity of the gas supplied to the RPC, and 3) uniformity of the gas gap within the RPC that gives rise to the spark breakdown and the subsequent induced pulse on the pick-up strips.

Our manufacturing philosophy is therefore to build as large a chamber as possible for each super-layer without compromising the performance necessary to achieve the above stated goals. This implies that the materials used in the individual chambers should be able to be assembled into a self-supporting structure that first and foremost maintains the gas gap dimensions with a tolerance of about $\pm$ 5%, or in the case of a 2 mm gas gap, $\pm$ 100 microns. Similar dimensional tolerances are necessary for the distance between the pick-up strip electrodes and their ground plane, in order to control the strip impedance. The gas gap is maintained by gluing 2 mm thick, 1 cm diameter disk spacers every 10 cm or so in between the laminated sheets. The strip-electrode-to-ground plane gap is maintained by virtue of the rigid foam to form the proper impedance transmission line. Because of this design flexibility the RPC can actually be deformed substantially from a flat plane and still operate correctly.

As an extreme case, the RPC could be formed into a series of concentric cylindrical shells rather than the flat sectors envisioned in GEM and theoretically provide the same operating characteristics. Thus the structural support for the RPCs can be minimized to help reduce muon scattering. The RPCs in GEM can be allowed to deform by as much as 10 cm

over the largest dimensions without affecting the overall operation of the muon trigger system, although proper support structure design can probably minimize this sag to less that 1 cm. Because materials associated with the RPC should be minimized, the addition of support frames will probably not be allowed. Also, depending on the design, RPCs could be integrated into the drift tube structure, utilizing this structure to minimize sags.

Similarly, the tolerance associated with the placement of the pick-up strips is defined by the desired measurements of timing (bunch crossing) and momentum (sagitta). This tolerance as we see it implies strips to be located also to about $\pm$ 100 microns, a not too difficult tolerance to achieve using standard machining or photolithography techniques.

Materials stability is an issue for long term performance of the RPCs. Plastics degrade over time due to out-gassing of plasticizers, interaction with ambient UV light, temperature fluctuations, radiation, and, in the case of RPCs, uniformity and stability of the bulk resistivity of the resistive plates and interaction of the plates with spark discharges. Proper materials choices and design will help to insure the long term stability of the RPCs. We can benefit from the experience of other RPC systems that show long term (years) operation of RPCs without degradation, albeit, under lower rate conditions than that expected at the SSC. Aging tests are easily performed in R&D to determine the proper long term operation of RPC materials.

2. Component fabrication

Component fabrication will be based on commercially available materials of more-or-less standard sizes in order to keep costs to a minimum. For example, Westinghouse can provide Bakelite of a standard width of 4 feet (or less - they can cut to any specified width in this range) and with a length of many meters. Bakelite sheets would be cut to the necessary lengths for the particular RPC chamber dimension and then butted together with adhesives, as previously described, while cross laminated with aluminized mylar sheet for strength. The assembly of RPC chambers is a relatively simple process of laminating layers of material together into a final structure that is then incorporated into a perimeter frame containing gas and electrical connections. In addition this frame allows for attachment points for the RPCs to the precision tracking chambers or to the superstructure of the Muon System.

Other components for the RPCs include rigid foam board, aluminized mylar, glues, PVC spacers (1 cm diameter, 2 mm height) for maintaining the gas gap, gas fittings (Swage-Lok), electrical connectors (LEMO or Kings K-lok), high voltage connectors (SHV or GHV), and extruded aluminum channel. All these components are commercially available. Fabrication of the RPC laminates requires large area benches of approximately 4 m x 5 m at the largest for the outer super-layer.

3. Precision requirements

There are no precision requirements necessary for the RPC assembly. Standard tolerances on thicknesses of Bakelite and other commercially available laminate materials are sufficient for the proper operation of the RPCs. The PVC disk spacers can be turned out using computerized machining with the necessary height tolerance of $\pm$ 100 microns ($\pm$ 4 mils) without difficulty. Pick up strips can be laid out by masking aluminized mylar sheet

or by machining with fine cutting tools. Either method is capable of providing the necessary dimensional tolerance of $\pm$ 1 mm.

4. Manufacturing technology development requirements

There are no major technology development requirements needed to manufacture RPCs, except perhaps, fixturing for holding the RPCs during storage, testing, shipping and assembly into the Muon System.

5. Vendor availability

RPCs have been manufactured in large quantities by Italian University groups for many years. In fact, we have performed a large part of our R&D on an Italian RPC with dimensions 1 m x 2 m at MIT. A factory to build these RPCs is already in place and is capable of building RPCs to our specifications with minor modifications to their manufacturing process to take into account our new materials. If the need arises the manufacturing of RPCs could be carried out in the US at LLNL or MIT or also in China. Tsing Hua University in Beijing has written a Letter of Intent with the GEM Detector Collaboration to perform a number of manufacturing services for the various sub-systems including electronics for calorimeter and muon systems, as well as structural component assembly for calorimetry and the muon system.

6. Assembly procedures

Figure 12 shows a concept mechanical design for a generic RPC module. 288 modules in three different sizes are needed to make a complete system. Table 1 lists the module dimensions, and other parameters. The modules are seen to have non-standard dimensions and will have to be made from smaller sized pieces. The joining of pieces of rigid foam board, for example, will be accomplished by utilizing the specially coated mylar films as cross-plies glued on each side of the boards. Additional rigidity will come from the joining of the mylar/foam laminates through the gluing of the small gas gap spacers. The overall laminate will be somewhat flexible but will not exhibit any substantial shear deformation.

Figure 13 shows a detail of the RPC where the laminate layers join the perimeter frame. There is an insulating margin of 1 cm around the perimeter of each RPC laminate layer to allow the attachment of the laminate to aluminum U-channel without shorting the graphite electrodes or the edge pick-up strips. The laminate layers fit into 1.3 cm wide grooves machined in the U-channel and a bead of glue is applied around all edges to provide a gas-tight seal. Gas feed-throughs (2, 4, or 6 for inner, middle, and outer super-layers, respectively) are attached on the outside of the end perimeter frame in-line with the RPC gas gaps. There are two redundant layers of RPC per module and each layer of pick-up strip electrodes are daisy-chained together internally. Pick-up strip electrodes are connected to LEMO bulkhead connectors in the perimeter frame using short lengths of wire.

The perimeter frames are assembled with three sides welded together. The RPC laminates are guided into the perimeter frame grooves and the fourth perimeter frame piece is attached and glued, rather than welded. Holes in the perimeter frame are also provided for

mounting brackets. If additional stiffness is required, carbon composite or aluminum cross beams can be installed.

Figure 8 shows an assembled half-sector of RPCs. The RPC modules overlap in Z in order to provide 100% coverage for muon trigger efficiency. 100% overlap in phi may not be possible because of structural supports between the sectors. In this case the phi coverage is about 95%. As mentioned previously, there are two redundant RPC layers per module. These layers are interconnected internally for both bend-plane and non-bend plane strips. Module-to-module daisy-chaining is done in the Z direction (1.3 cm bend plane strips) to effectively form single strips spanning the length of each half-sector. These interconnects are made using short lengths of RG-174A/U (50 ohm) coaxial cable. Non-bend plane strips are distributed to individual RG-174 coax cables along the longitudinal sides of the RPCs. These cables are bundled and routed out to the trigger processing electronics at the ends of the RPC system.

7. Fixturing and tooling requirements

Special tooling is not required for the RPC system. Electrical connectors use standard machine threads for bulkhead feed-throughs, gas fittings use standard pipe threads. Perimeter frames of aluminum are welded or glued together. Laminates are glued using epoxies. Precision spacers for maintaining the gas gap can be turned out using computer controlled machining techniques. Large area plastic sheets with strip electrodes need to be laid out either by machining strips in a solid aluminized mylar sheet or by masking methods.

Fixturing for supporting the RPC units during shipping, storage and assembly will need to be designed. A simple fixture would support the RPC vertically to prevent undue stress on the unsupported panel and would have wheels for allowing the chamber to be moved.

8. Size limitations

The envisioned RPC design is constrained to sizes less than 4 m in length for ease of handling. Our philosophy is to minimize the number of chambers for simplicity in the gas system and electrical interconnects. The current configuration of 2 - 3 - 4 chambers per super-layer sector do not match the presently envisioned configuration for the precision tracking chambers (2 - 4 - 4), however, the RPC chamber design is flexible and can be redesigned to overlap whatever final tracking chamber configuration is decided upon. RPCs have a low mass of about 0.01 psi and so a fully assembled RPC chamber will weigh about 70 lbs., 100 lbs, and 150 lbs for a single inner, middle, and outer chamber, respectively. The weights and dimensions are within reason for 2 or 3 technicians to handle a completed chamber using light duty chain hoists or overhead cranes.

C. Alignment

Because of the previously mentioned performance criteria for RPCs as a Level 1 trigger, precision alignment is not necessary for these chambers. The RPCs can be mounted

either separately from the precision drift tube technology, or co-located with the drift tubes. It is assumed during construction that sufficient care in fabrication will allow strips to be located with an accuracy of about ± 1 mm with respect to a fiducial placed on the edge of the RPC support frame. Sag in the RPC will be within the limits imposed for proper muon timing and momentum determination so that monitoring of the sag will not be necessary.

In-situ RPC alignment can be performed using cosmic rays or physics events at the SSC. In addition, if the RPC system is incorporated into the drift tube structure, alignment will be coupled to the drift tube alignment system without added cost. This is because the RPC strip readout is referenced to a fiducial that can be referenced to the drift tube alignment system. In any event, RPC location to 1 mm in all degrees of freedom is sufficient to insure proper operation for Level 1 triggering.

D. Structural Performance

A first attempt at modeling the RPC structural performance has been made at LLNL. A standard Italian RPC was modeled using the following assumptions:

1. RPC sandwich assumed to be 3000 mm x 4000 mm x 2 mm Bakelite sheets with 10 mm diameter, 2 mm thick disk spacers every 10 cm.

2. Aluminum 6061-t6 frame with cross-stiffeners.
3. Support fixed at four corners.

4. Sandwich bonded to frame and stiffeners.

5. FEA model has stiffeners on one side only but with 2x section modulus.

6. Bakelite properties: $E = 1.239 \times 10^4$ N/mm^2, density = 1.87×10^{-5} N/mm^3

The results of the analysis are shown in Figure 14. Deflection under the RPC's own weight is 109 mm. Frame stress is less than 25 ksi. The fundamental frequency is estimated to be less than 10 Hz.

Future calculations will examine the RPC for the two layer design with thinner Bakelite layers. Current calculations indicate that the stresses to not appear to limit the design of the largest RPC chamber. In addition, the deflection is likely to be reduced, in the case of 0.015" Bakelite, to about 10% of the deflection seen in this calculation. There is ample room to increase stiffener cross-sections and to increase frame heights, if necessary. If the RPC is mounted on the drift chamber, then calculations will be needed to establish the deflection of the drift chamber due to the added load of the RPC. It is likely that this added load will not adversely effect a properly designed drift chamber system.

E. Cost

1. Assumptions, basis

The cost of the RPC system has undergone a series of refinements starting with studies begun in October, 1991. In this time two additional cost studies have been performed, culminating in the Cost Estimate prepared on June 2, 1992 after experiences with the May 5, 1992 cost review held at SSCL. This costing was performed for both the Bakelite design and an alternative Cermet thin film design that held promise for reduced weight. R&D on the Cermet concept is continuing, however there is sufficient indication that thin Bakelite or plastic sheets of the proper resistivity can offer the desired performance and weight reductions without resorting to the exotic thin film technologies needed to fabricate Cermets. The June 2 costing reflects a system using 2 mm thick sheets of Bakelite material for the resistive plates. Thinner sheets, for example 15 mil Bakelite, might be suitable and provide a reduction in the cost. In addition the cost of structural support will certainly be reduced as the RPC system is made lighter. We assume a cost of $\$300/m^2$ for this structure although a detailed design for the structure has not yet been made. The June 2, 1992 costing memo follows (with modifications based on reduced structure cost).

2. Equipment, material and labor

Based on our experience with the Cost Review of May 5, 1992, we have attempted to revise our cost estimate to reflect new design changes and also to incorporate more "realistic" cost estimates based on vendor quotes.

Design changes have occurred that radically alter the RPC concept. This is based on new experience with the "Italian" RPC now in testing at MIT. It has been realized that a rigid, gas-tight box of aluminum honeycomb is not necessary. In addition, a new cabling scheme has cut the amount of cabling substantially.

In the process of revising the cost estimates a couple of errors were uncovered in the costing of Bakelite sheet and rigid foam sheet. The errors were in the calculation of the total volume of material needed and they have been corrected in this new Cost Estimate. Foam sheet is substantially cheaper in this estimate than in the previous (First Order) estimate, due to a change in the foam to Styrofoam, and the cost was determined by contacting a local plastics supplier. The cost of Bakelite sheet was confirmed verbally by contact with Westinghouse sales representatives to be the same as in the LLNL stock catalog.

For all estimates we have now included stainless steel tubing and Swage-Lok fittings, LEMO connectors, and cabling to the edge of the magnet. Additionally, we assume that the electronics cost is provided by the Trigger and Data Acquisition Group cost estimate

We estimate the total projected surface area of the RPC system to be 2743 m^2 consisting of two (somewhat redundant) concentric layers of RPCs in each super-layer.

With our more accurate description of the RPC system, we find that the cost has fallen substantially from our previous estimate: $2M for the Bakelite RPC system (no electronics cost included) compared to our "zeroth order" estimate of about $6M for a 2,000 m^2 system (which included the cost of electronics). So the cost of the RPC system will be about $700 per square meter (the RPC itself is about $\$200/m^2$). The breakdown of the cost is as follows:

Standard Bakelite RPC design

	Item	Cost ($/m^2)	Total Cost ($K)
1.	Aluminum U-channel	4.3	11.8
2.	Bakelite sheet or Cermet coated plastic film	27.0	74.1
3.	Foam (e.g. polyurethane sheet)	1.2	3.2
4.	Aquadag	16.9	46.4
5.	Aluminized Mylar sheet	15.4	42.2
7.	Spacers , glue	0.36	1.0
	Total Materials	65.16	178.7

	Cost ($/m^2)	Total Cost ($K)
Total Materials (x.25 for mach'g and waste):	**81.45**	**223.4**

	Item	Cost ($/m^2)	Total Cost ($K)
8.	Fabrication cost estimate: $60/hr @ 1m^2/hr	60.0	164.6
9.	Gas fittings edge x 2 for gas manifold)	4.6	12.6
10.	Steel tubing (1/4" diameter, 10.4 km long)	11.52	31.6
11.	RG-174 coaxial cabling (67.5 km)	5.18	14.2
12.	LEMO connectors (2 x 33,184 channels)	80.0	219.4
13.	Gas (Recirculator)	91.14	250.0
Total	**Miscellaneous**	**252.4**	**692.4**

Subtotal:

	Cost ($/m^2)	Total Cost ($K)
Materials, Fab., Gas system, Elect. system:	**333.9**	**915.8**

Thus the total cost is $1 M for a 2,743 m^2 system. We will take the cost of electronics to be $36/channel x 33,184 channels = $1.19M, although this cost does not appear in the WBS worksheets. We will conservatively estimate the cost of any RPC specific structural support to be $300/m^2 which is probably a gross overestimate and so zero contingency is assumed for this. Contingency for materials is set to be 5% and contingency for labor is assumed to be 100%,

	Cost ($/m^2)	Total Cost ($K)
RPC Materials, Fab., Gas system	333.9	915.8
Structural supports and integration with drift tubes	300.0	823
Materials contingency (5%)	15.85	43.5
Labor contingency (100%)	60.00	164.4

	Cost ($/m^2)	Total Cost ($K)
TOTAL	709.8	1,947

Thus for a 2743 m^2 system, the total cost would be about $2M . The largest uncertainty is in the structural support and integration cost estimate.

The two Cost Estimate Worksheets: WBS # 3.2.1.2.4.1.3 and WBS # 3.2.1.2.4.1.5 have been revised to reflect these new costs. Percentages are broken down differently than was done in the last worksheet to reflect what we think is a more realistic percentage for Materials, Machining and Fab/Ass'y. The total Materials cost is now about $98.25/m^2. Taking 25% of this number for machining and waste (our previous estimate of 100% of this number now seems somewhat high) gives $25/m^2 and we still use $60/m^2 for Fab/Ass'y. This gives the percentages: 54%, 13%, and 33%, respectively. Which is used for the basis of estimates in WBS # 3.2.1.2.4.1.3 and WBS # 3.2.1.2.4.1.5.

MUON SYSTEM
COST ESTIMATION WORKSHEET

WBS Element Title: Central Region Sector Assembly; RPCs; Off-Site; Assembly
WBS Element No: 3.2.1.2.4.1.3 **Date:** 11 Sep 92 **Rev:** 3 **Estimator:** T. Hamilton, C. Wuest

---

Scope: This element covers the labor and labor cost for the assembly of the RPC chambers, and the purchase and labor cost for assembly equipment.

Engineering/Design **PY:** **Comp. Rate($K/PY):** **PoP:**
N/A

M&S: Engineering/Design and Inspection/Administration ($K): 14
Misc. office supplies for Administration: $6K
PC/Mac/workstation charges: $8K

Inspection/Administration **PY:** 2.25 **Comp. Rate($K/PY):** 133 **PoP:** 7/94-6/96
Assumes Eng (nat'l avg) oversight of assy equipment purchase activity: 1 eng, full-time for 3 mos = .25 PY from Weinstein/Osborne estimate: ('cost of production')
- reduced to 76% (for central region only), actually time-scaled reduced from 36 to 24 mos (67%)
- Eng (nat'l avg) oversight of assembly activity: 1 eng, full-time for 2 years = 2.00 PY

Procurement/Fabrication Material **($K):** 300
LSDT/Weinstein/Osborne estimate was $365K + $50K misc
- assumed misc assy equip: $250K
- assumed misc nuts/bolts, pins, etc.: $50K

Installation/Assembly **PY:** 6.0 **Comp. Rate($K/PY):** 112 **PoP:** 7/94-6/96
LSDT/Weinstein/Osborne estimate was 1 PY Eng, 1 PY Sr. Tech for machine set-up
- assumed same for RPC estimate
from Wuest/Pless estimate:
- $60/m^2 x 2743 m^2 = $165K/$107K/PY(sr. tech, nat'l avg) 1.5 PY
-for assembly: Wuest/Pless estimate of $300/m^2 was prorated against materials, machining, and assembly based on percentages established on Page 3 of Wuest/Pless "Second Order" estimate
$300/m^2 x 2743 m^2 x 33% = $272K/107K/PY 2.5 PY

Material: Installation/Assembly **($K):** 6
Misc. office supplies for Install/Assembly: $6K

Contingency Total: 38

Technical:	0	Basis:	none
Cost:	30	Basis:	engineering judgment, labor rate & material concern
Schedule:	8	Basis:	delays completion of critical path item

Comments

Because all costs were given in $/m^2$, all labor rates/categories were assumed to be national average. This assumption is reflected in the PY labor loading. If lower rates were assumed by Wuest/Pless, the labor loading would be higher.

MUON SYSTEM
COST ESTIMATION WORKSHEET

WBS Element Title: Central Region Sector Assembly; Bakelite RPCs; Off-Site; Machining/Inspection
WBS Element No: 3.2.1.2.4.1.5 **Date:** 11 Sep 92 **Rev:** 5 **Estimator:** T. Hamilton, C. Wuest

---

Scope: This element covers the labor and labor costs for the machining and inspection of the Bakelite RPC and assembly fixturing. Also, costs for oversight and purchasing of stock and material for machining.

Engineering/Design **PY:** **Comp. Rate($K/PY):** **PoP:**
N/A

M&S: Engineering/Design and Inspection/Administration ($K): 45

Misc. office supplies for Inspection/Administration:	$15K
PC/Mac/workstation charges:	$22K
Travel: 1 person, 4 trips to machine shop, inspection shop @$2K/trip	$8K

Inspection/Administration PY: 6.19 **Comp. Rate($K/PY):** 72 **PoP:** 1/94-3/96
Assumes Engineering (nat'l avg) oversight of stock/material purchase activity:1/4-time for 24 mos=.50 PY
Assumes Engineering (nat'l avg) oversight of mach'g & inspect activity: 1/2-time for 2.25 yrs = 1.13 PY
Assumes Sr. Tech (job shop) performing inspection activity: 1 tech, full-time for 2 yrs = 2.00 PY
Assumes Jr. Tech (job shop) performing inspection activity: 1 tech, full-time for 2 yrs = 2.00 PY

- no inspection cost estimate provided from Wuest/Pless
- estimate of $100K (approx. 2 PY) for inspection from Weinstein/Osborne estimate approx doubled

---

Procurement/Fabrication Material **($K):** 900
from Wuest/Pless "Second Order" estimate: Wuest/Pless cost estimate multiplied by 2743 m^2 for central region

Aluminum U-channel:	$12K
Bakelite sheet (2mm):	$74K
Foam sheet (2mm):	$3.2K
Aquadag:	$46K
Aluminized mylar (0.005"):	$42K
spacers, glue, etc:	$1.0K
material for structural support:	$444K

- for structural support material: Wuest/Pless "First Order" estimate of $600/m^2$ was prorated against materials, machining, and assembly based on percentages established on Page 3 of Wuest/Pless "First Order" estimate : $300/m^2$ x 2743 m^2 x 54% = $444K

- general M&S (nuts, screws, gas fittings, elect. connectors):	$232K
- fixtures stock (ss tubing, coax cable):	$46K

Installation/Assembly PY: 9.0 **Comp. Rate($K/PY):** 75 **PoP:** 1/94-12/95
from Wuest/Pless "First Order" estimate:

RPCs Machining
1.) $25/m^2 x 2743 m^2 = $69K/$74.5K/PY = 1.0 PY
2.) for structural support machining: Wuest/Pless estimate of $300/m^2 was prorated against materials, machining, and assembly based on percentages established on Page 3 of Wuest/Pless "Second Order" estimate
$300/m^2 x 2743 m^2 x 54% = $444K/$74.5K/PY = 6.0 PY
Assumed assembly fixtures: 2 machinists, full-time for 1 year: 2 PY = 9.0 PY total

Material: Installation/Assembly **($K):** 18
Misc. office supplies for Installation/Assembly: $18K

Contingency Total: 38

Technical:	0	Basis:	none
Cost:	30	Basis:	engineering judgment, labor rate & material concern
Schedule:	8	Basis:	delays completion of critical path item

Comments

3. Development, engineering, procurement/fabrication, installation/assembly

Research and development will likely continue to refine the RPC with emphasis on reduction of materials (for increased muon resolution and decreased structural cost). In addition, new materials that show promise for high rate applications in the expected neutron background are being studied at the present time. These materials are typically low resistivity plastics that are commercially available with similar costs to Bakelite, however the manufacturers have greater flexibility to provide these materials in odd sizes and non-standard thicknesses with little impact on cost.

Engineering is being carried out at LLNL to determine the structural requirements of the RPCs and will likely continue in coordination with engineering efforts at Draper Labs and SSC Laboratory.

Procurement will be carried out by coordinators at LLNL and SSCL and fabrication of RPCs can take place overseas if cost of labor is an issue. Installation/assembly, of course, takes place at SSCL and requires similar conditions for installation/assembly of drift tube technologies, although the individual chamber weights are not as demanding on personnel and facilities. Estimates of manpower for these items are given in the Cost Estimation Worksheets in the previous section.

4. Cost Uncertainties

The major cost uncertainty at this time is the structure cost, because the RPC may be incorporated into the drift tube structure and utilize its interface to the super-structure. In addition, the cost of machining and fabrication is somewhat uncertain. Also, electronics costs are not included in this review and estimates vary from about $12/channel to about $35/channel depending on the source of the electronics and the fabrication in the US or overseas. Cost of materials is more certain, given the standard nature of the materials involved. Cost estimates for materials have been based on manufacturer's quotes or LLNL stock book prices for fittings, connectors, plastics, glues, etc. Details of costs have been presented in a number of reviews over the past year and can be found in various Cost Review proceedings.

In summary, it appears that a complete RPC system can be built for a cost of less than $3M, with electronics included. This cost can perhaps be further reduced by a simplification of the structural requirements if the RPCs are incorporated in the drift tube support system.

F. Schedule

1. Long lead components/material

All material and components are off-the-shelf stock items. Once the items have been identified, all items and materials can be at the RPC Factory within 120 days of receipt of purchase orders.

2. Component Fabrication Time

a. RPC fabrication time

If we assume a team of four people, we estimate that construction can proceed at a rate of about 160 square meters per week. Our average chamber has an area of 10 square meters. Hence, we can estimate that this assembly team can assemble about 16 chambers per week or about three chamber per day. The total of 288 chambers will therefore take, under this assumption, 18 weeks. We have added a factor of two in our contingency for this item. In this case, the 36 week estimate for fabrication time would fit into any envisioned SSC/GEM schedule.

b. RPC gas system

All the components of the gas system are off-the-shelf items, hence there is really no component fabrication time.

3. Assembly time

a. RPC chambers

Once the RPC chambers are fabricated there is no further assembly time.

b. RPC gas system

Gas systems, such as the RPC system, usually take about six months to assemble. We have now gained experience in assembling a four component gas system at LLNL and feel reasonably confident in this estimate.

4. Installation time

The installation time of the RPC system is completely dictated by the drift chamber installation time. Given the weight of the RPC and the alignment tolerance of the RPC, the RPC system will not slow down the drift chamber system installation time.

5. First availability

At this point in time, we still need a one year final R&D effort to construct the largest prototype RPC chamber. This chamber would be constructed by the members of the RPC Collaboration. It would then take a second R&D year to set up a proper factory including special jigs and handing tools, and to work out the assembly line bugs. At the end of that year the first production line chambers would be produced. Given the appropriate R&D funding for those two years, the first production RPC chamber would appear in January, 1996.

Figure Captions

1. Sketch of Italian (single layer) RPC.

2. Schematic layout of materials in the proposed two layer RPC for the GEM Detector.

3. Four component gas mixing system designed and built at LLNL. A similar system will be utilized for the RPC system.

4. Schematic layout of the gas delivery system for the RPC chambers. Note that the gas is split at the central membrane and directed to the ends of the sectors for the outer and middle super-layers. The inner super-layer directs the gas from end to end.

5. Representation of an RPC/drift chamber sector concept using a 3-3-2 configuration.

6. Detail of RPC attachment concept.

7. Schematic of inner RPC super-layer showing dimensions and Z overlaps.

8. Schematic of middle RPC super-layer showing dimensions and Z overlaps.

9. Schematic of outer RPC super-layer showing dimensions and Z overlaps.

10. Sketch of the bonding of two Bakelite panels. The upper splice is filled in with epoxy and the linseed oil coating covers the bond. Cross plies of aluminized mylar further strengthen the bond.

11. Sketch showing the trigger timing concept. In a) the key is to match strip propagation speeds with coaxial cable propagation speeds (by matching their characteristic impedances) so that signals in X and Y arrive at a chamber corner at the same time. In b) the signals are fed out to the sector 60 degree edge and then routed out of the magnet.

12. Layout of 2 layer RPC for reference to Figure 13.

13. Concept sketch showing the RPC laminates bonded to an aluminum U-channel. Also shown are gas and signal connectors.

14. Displacement contours for a 3 m x 4 m Bakelite RPC supported at its corners. The maximum displacement is about 10.9 mm in the center of the panel. Details of the calculation are given in the text.

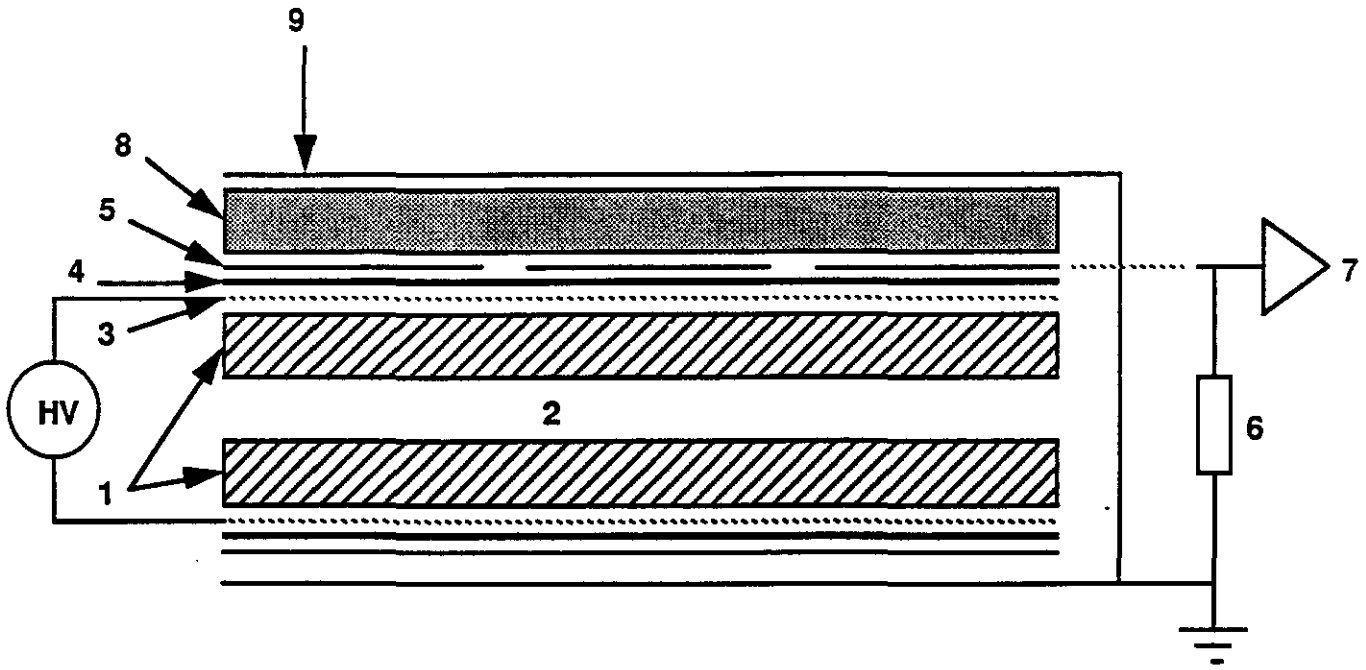

1 Bakelite plate
2 gas
3 graphite coating
4 insulating foil
5 aluminum strips
6 line termination
7 discriminator
8 foam
9 aluminum ground plane

Figure 1

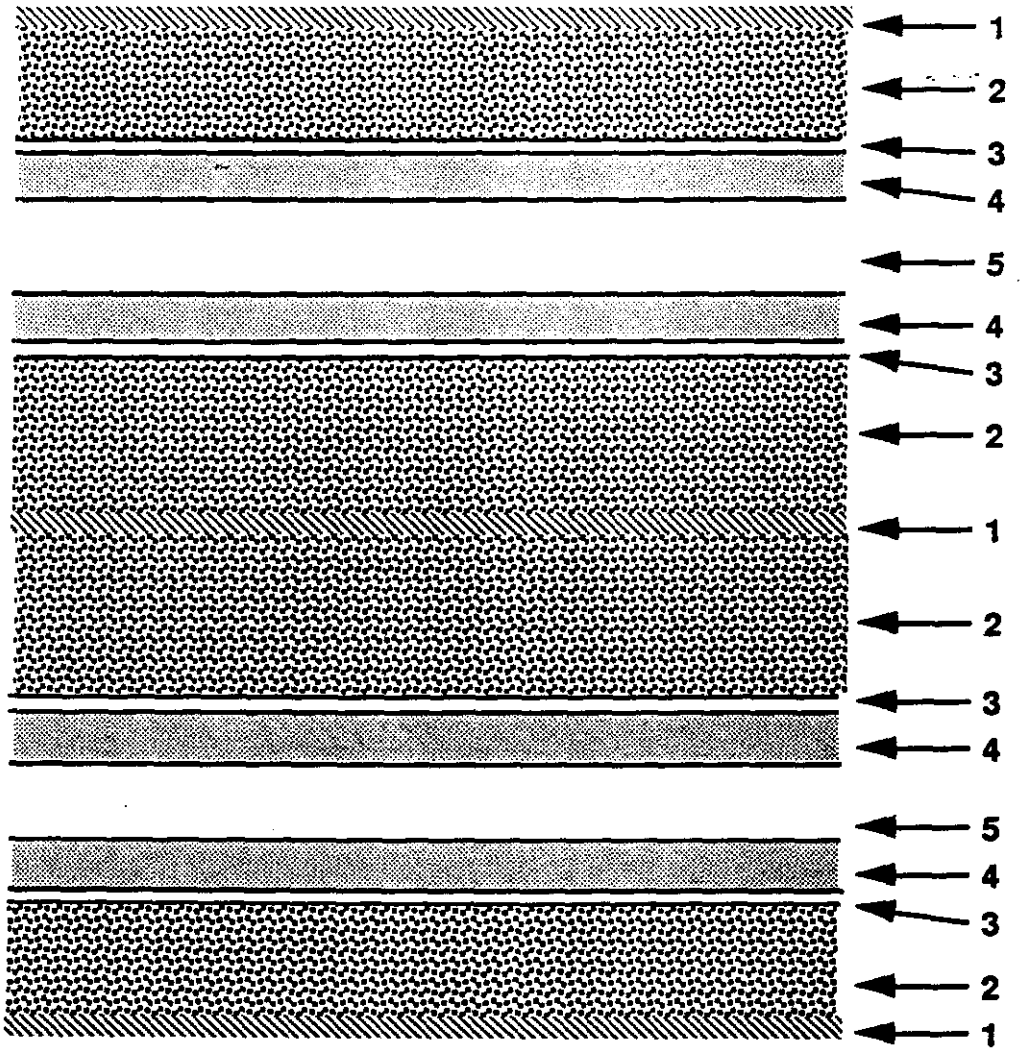

1. 0.010" aluminum
2. 4 mm foam
3. 0.005" al. mylar
4. 0.015" Bakelite(aquadag coating)
5. 2 mm gas gap

scale ~ 10:1

Figure 2

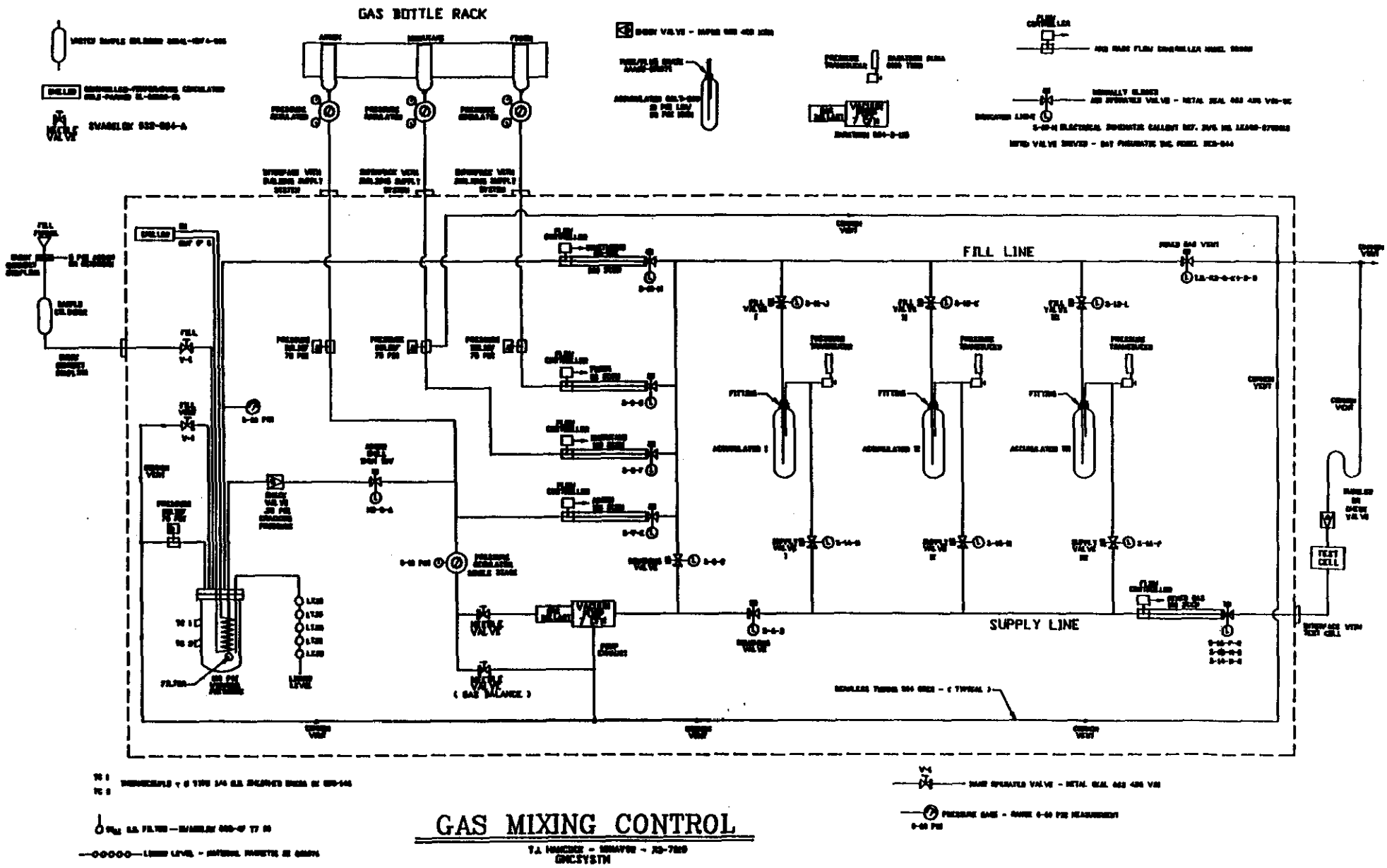

Figure 3

NATIONAL 42-182 100 SHEETS

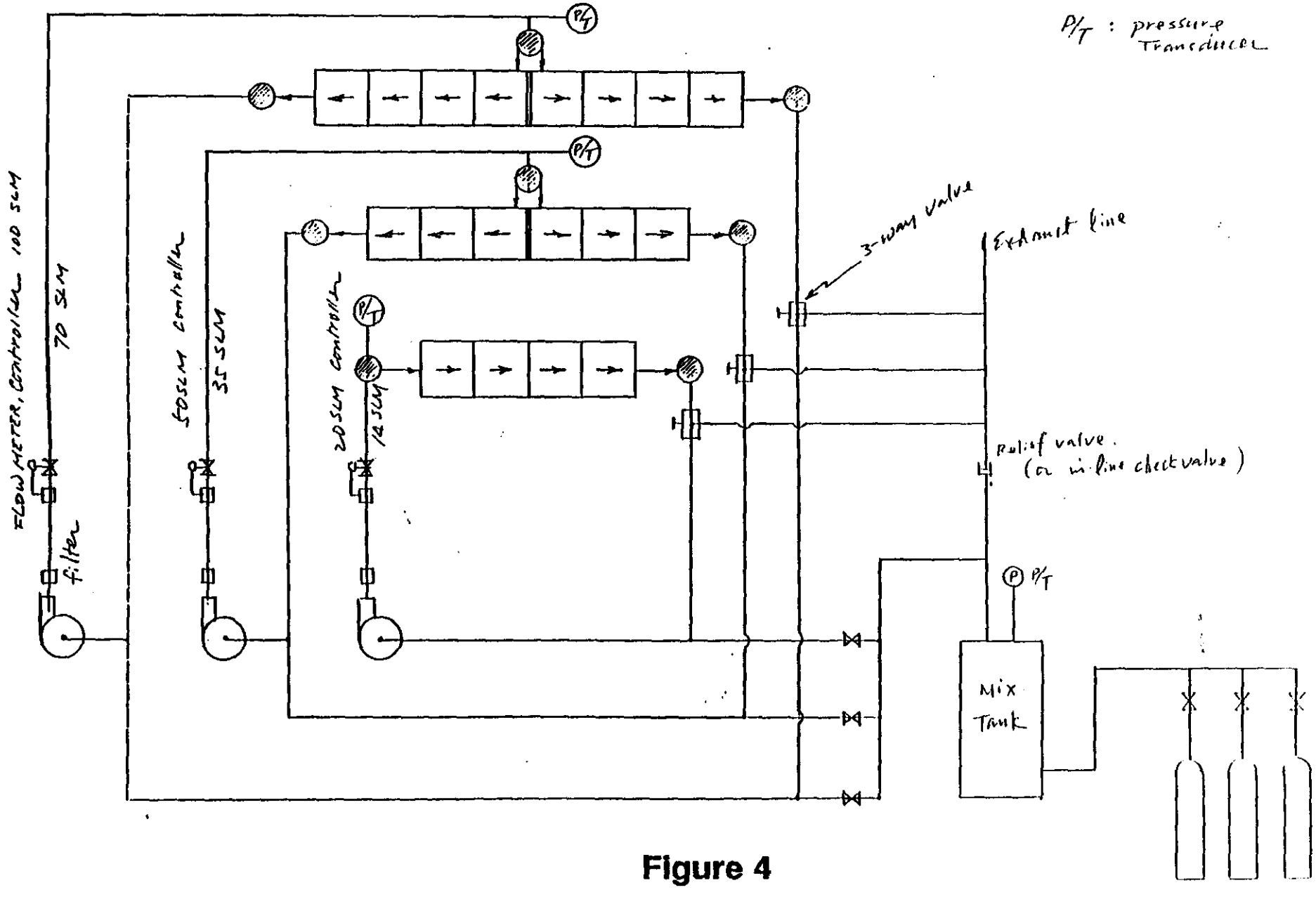

Figure 4

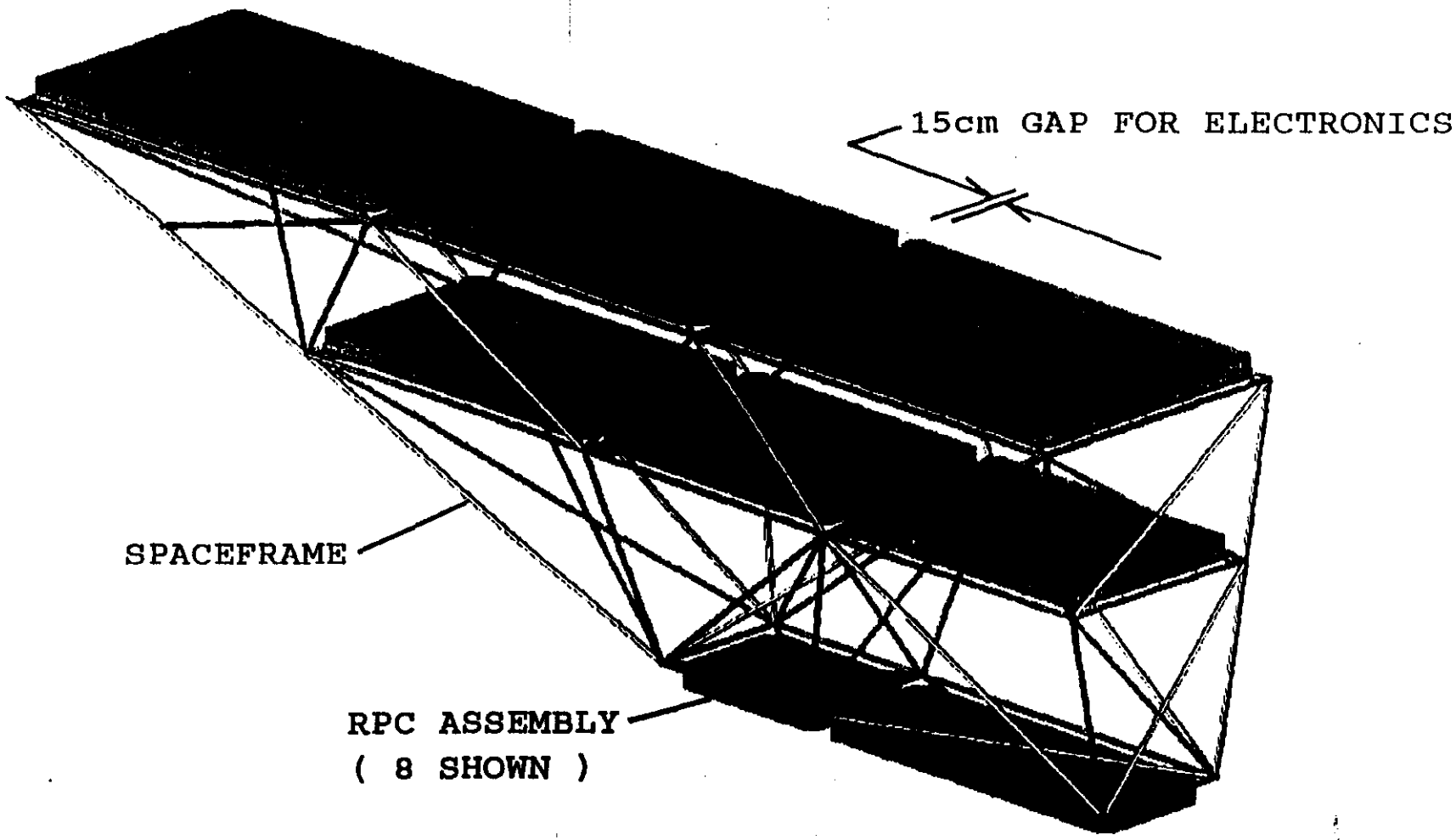

MUON SEGMENT

Figure 5

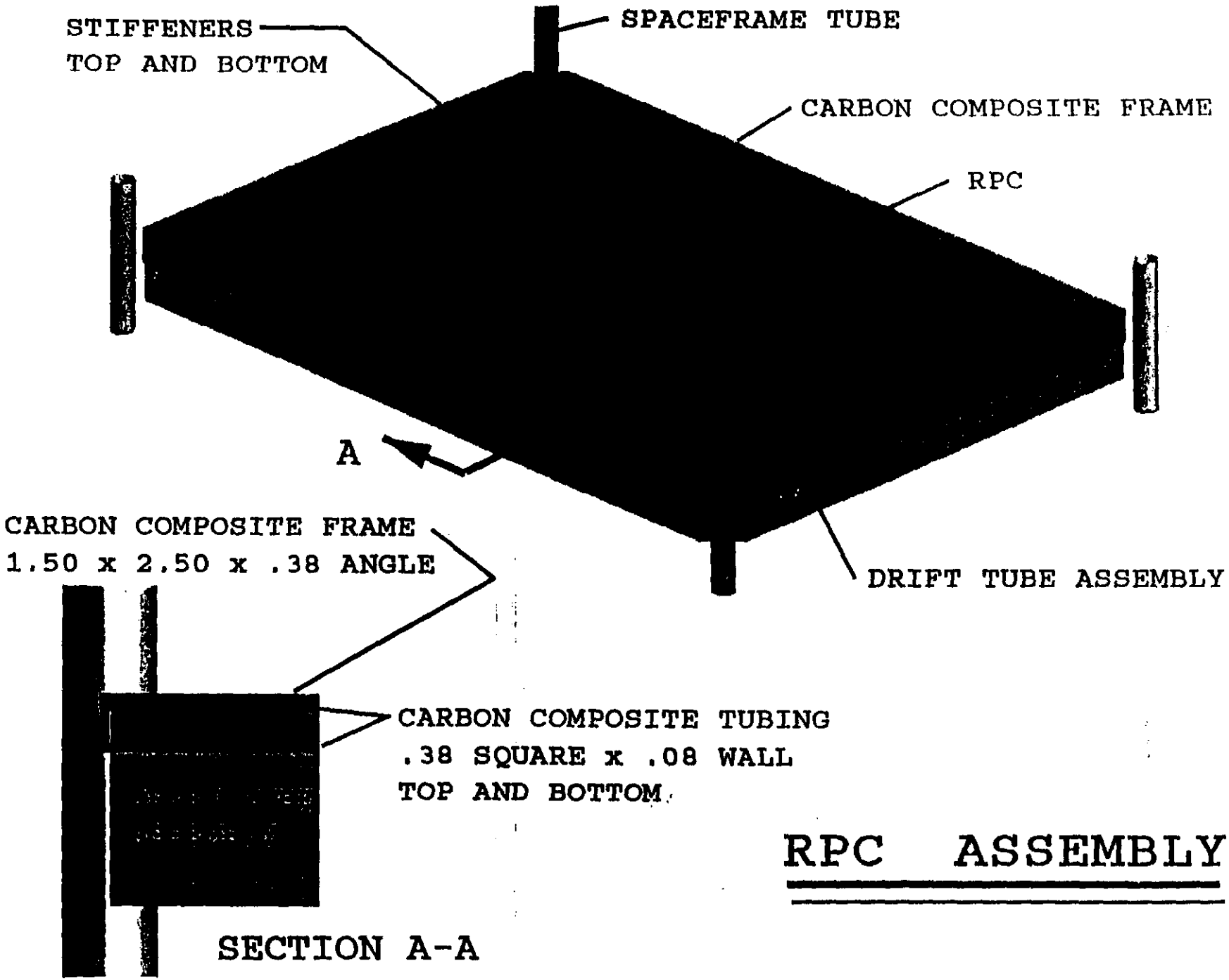

RPC ASSEMBLY

Figure 6

Inner RPC box layout - 2 chambers overlap per sector
x 16 sectors x 2 halves = 64 chambers

- 28.1 cm overlap

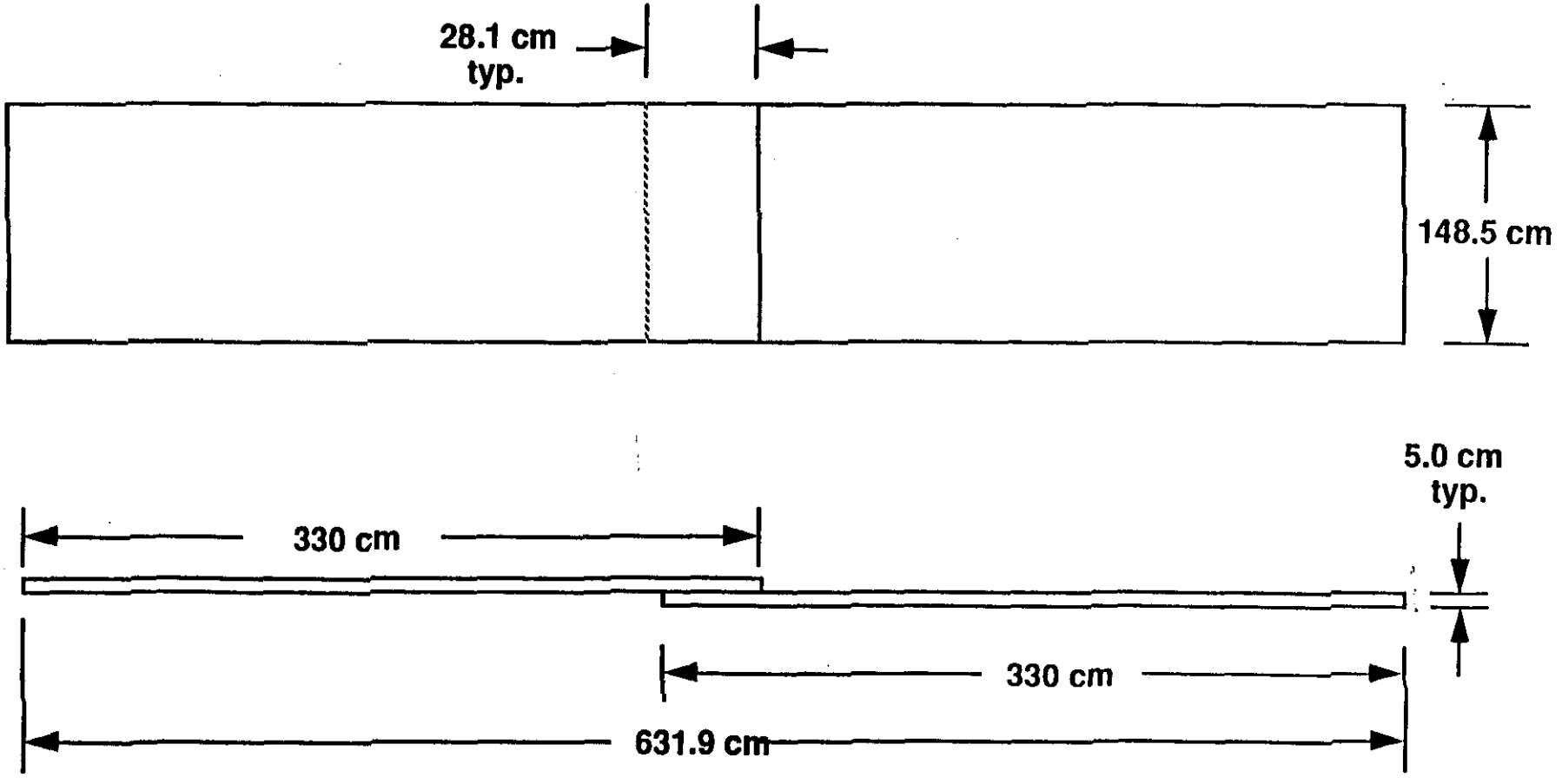

Figure 7

Middle RPC box layout - 3 chambers overlap per sector
x 16 sectors x 2 halves = 96 chambers

- 18.7 cm overlap

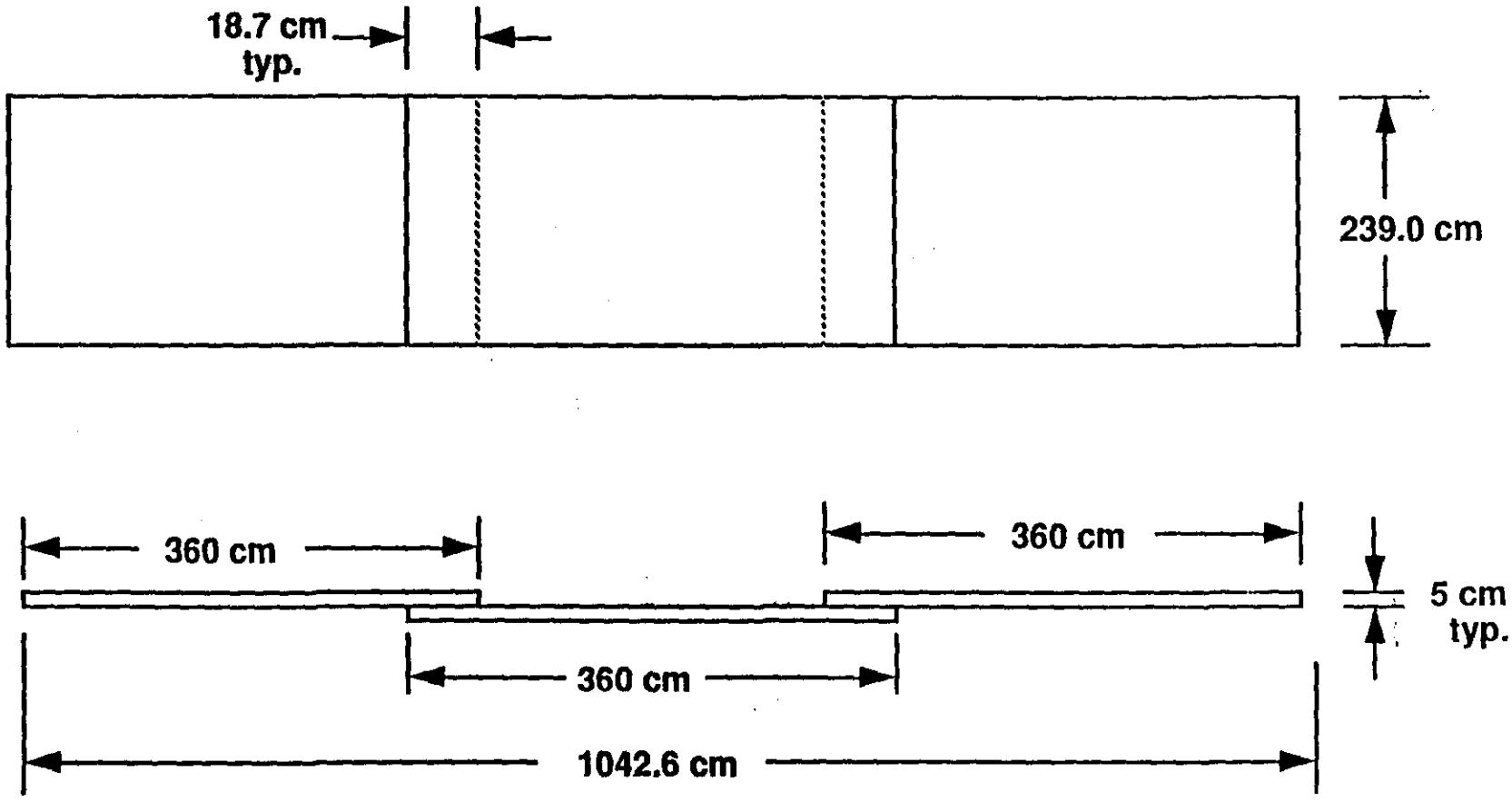

Figure 8

Outer RPC box layout - 4 chambers overlap per sector
x 16 sectors x 2 halves = 128 chambers

- 15.0 cm overlap

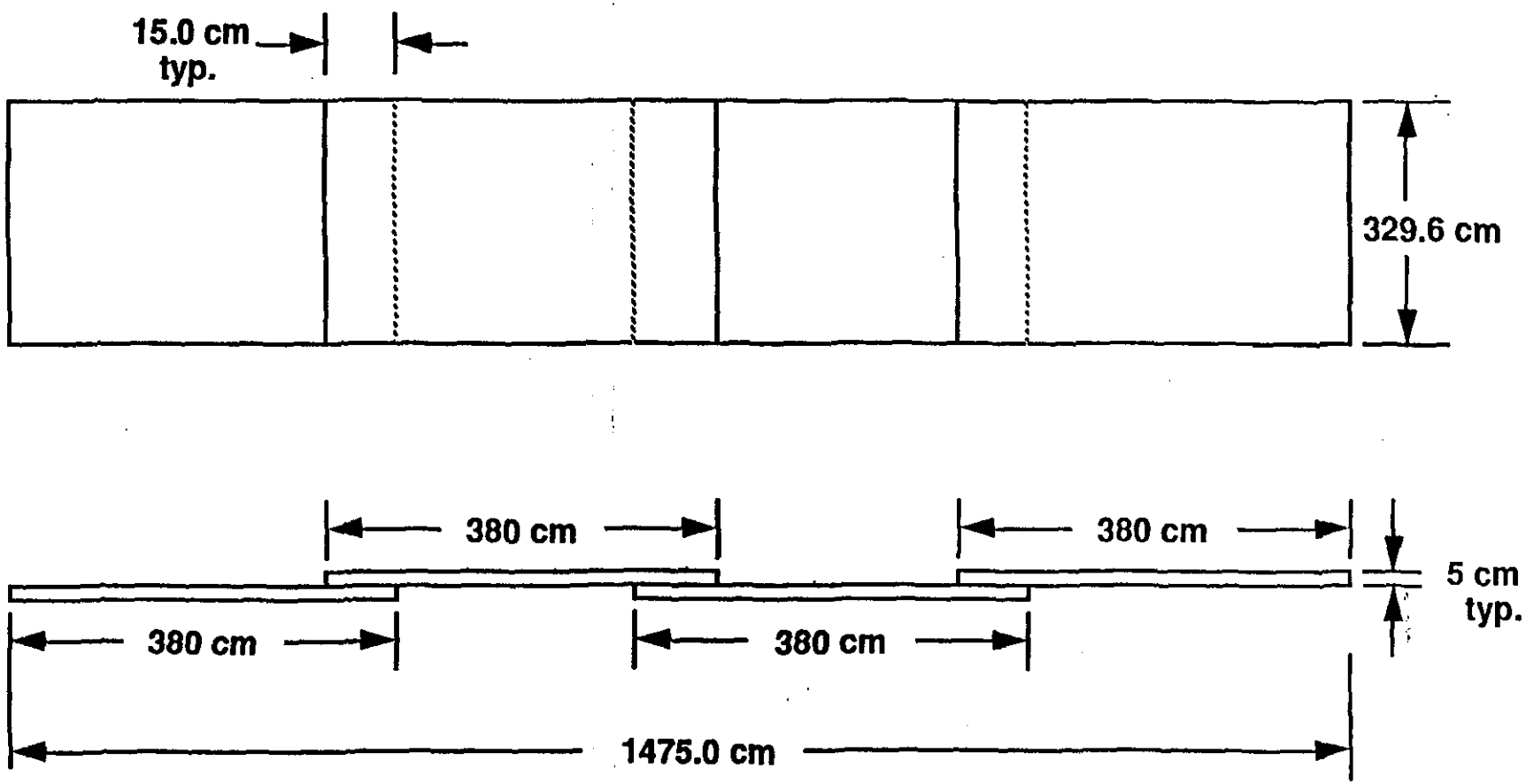

Figure 9

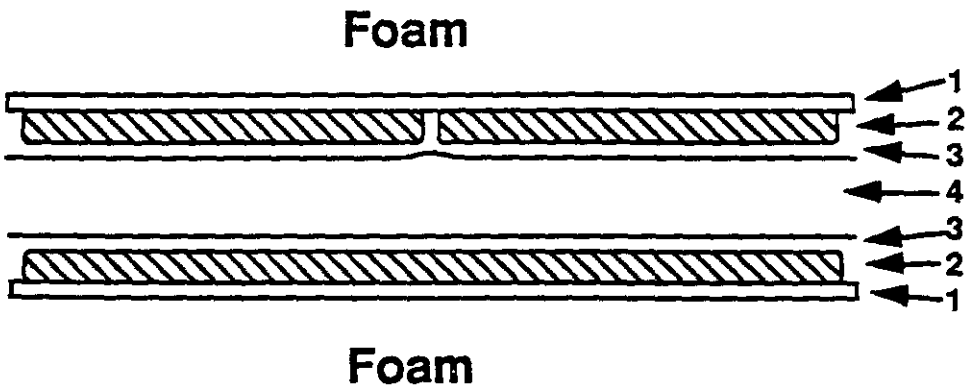

1. Al Mylar
2. 0.015" Bakelite
3. Linseed oil coating
4. 2 mm gas gap

Figure 10

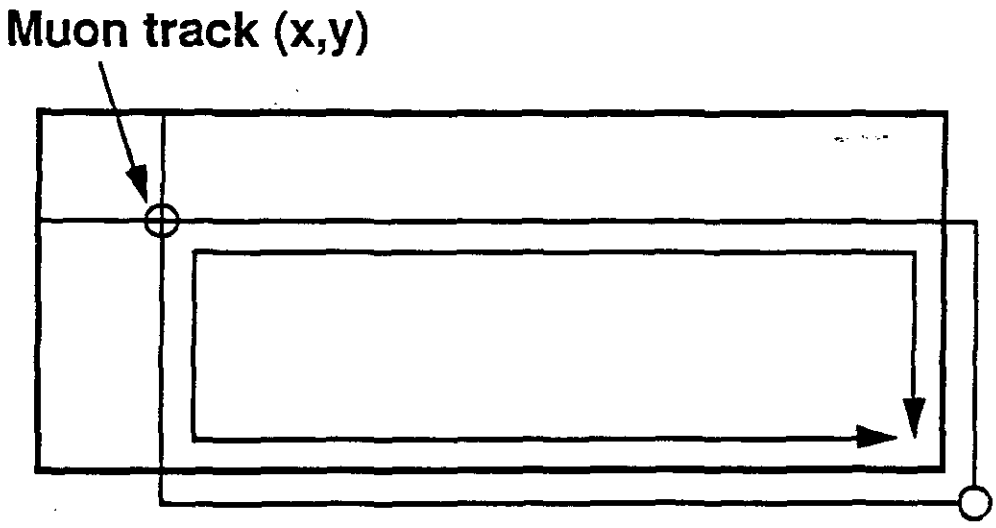

(a)

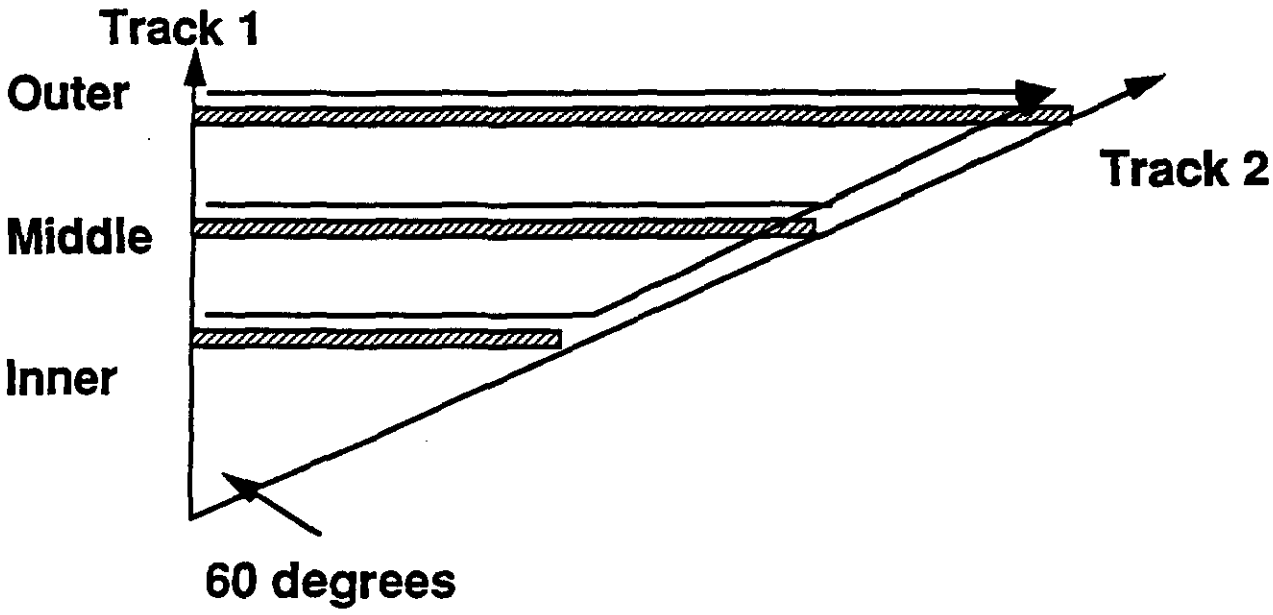

(b)

Figure 11

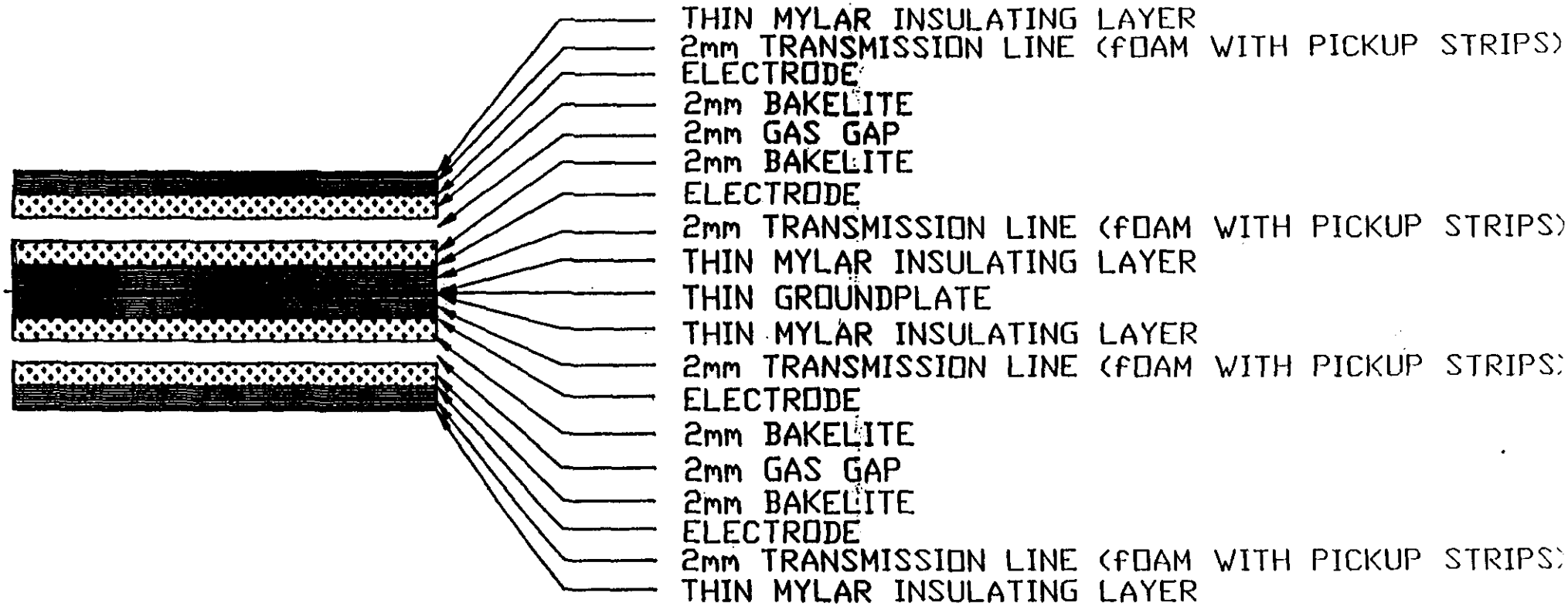
THIN MYLAR INSULATING LAYER
2mm TRANSMISSION LINE (FOAM WITH PICKUP STRIPS)
ELECTRODE
2mm BAKELITE
2mm GAS GAP
2mm BAKELITE
ELECTRODE
2mm TRANSMISSION LINE (FOAM WITH PICKUP STRIPS)
THIN MYLAR INSULATING LAYER
THIN GROUNDPLATE
THIN MYLAR INSULATING LAYER
2mm TRANSMISSION LINE (FOAM WITH PICKUP STRIPS)
ELECTRODE
2mm BAKELITE
2mm GAS GAP
2mm BAKELITE
ELECTRODE
2mm TRANSMISSION LINE (FOAM WITH PICKUP STRIPS)
THIN MYLAR INSULATING LAYER

Figure 12

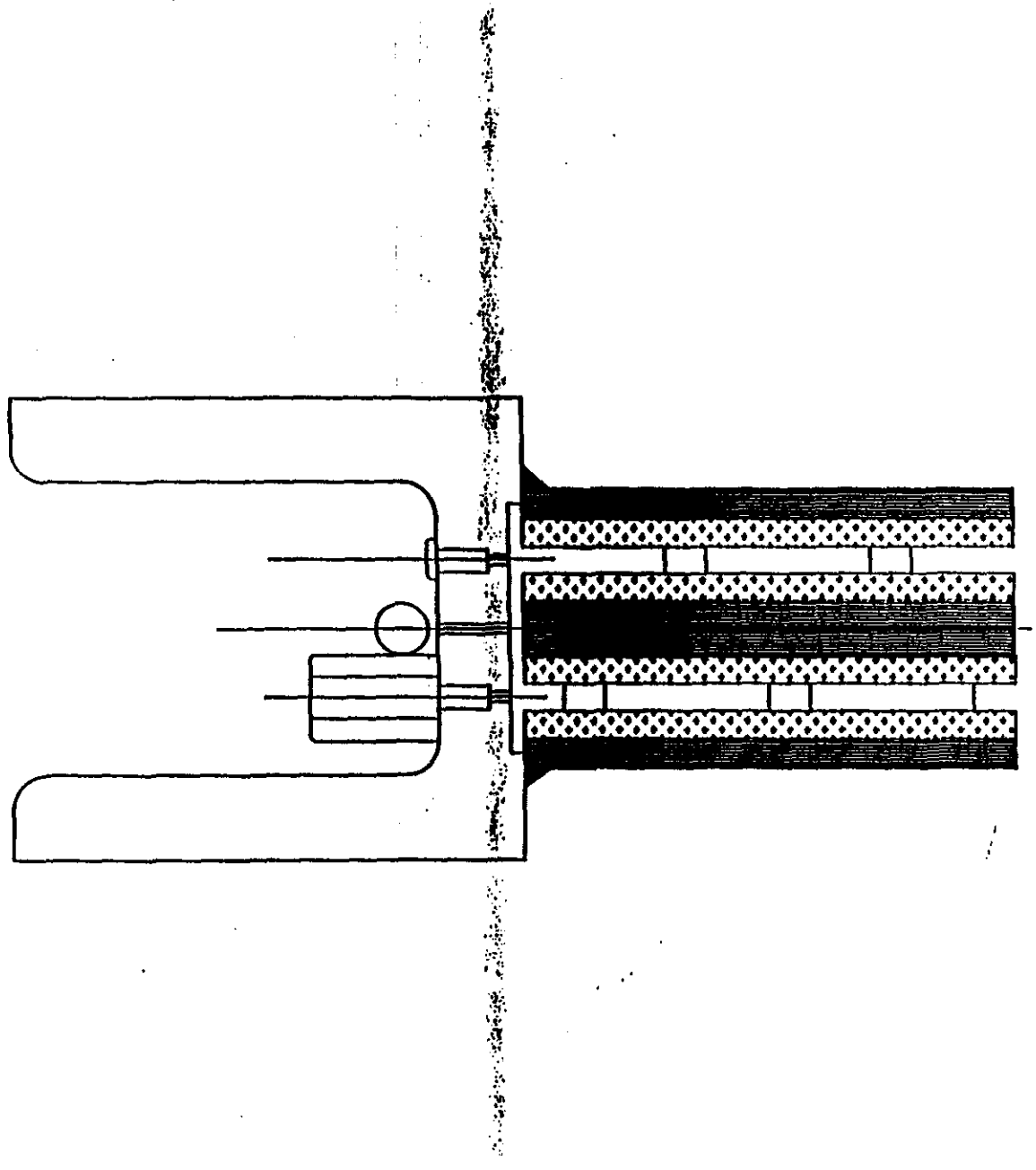

Figure 13

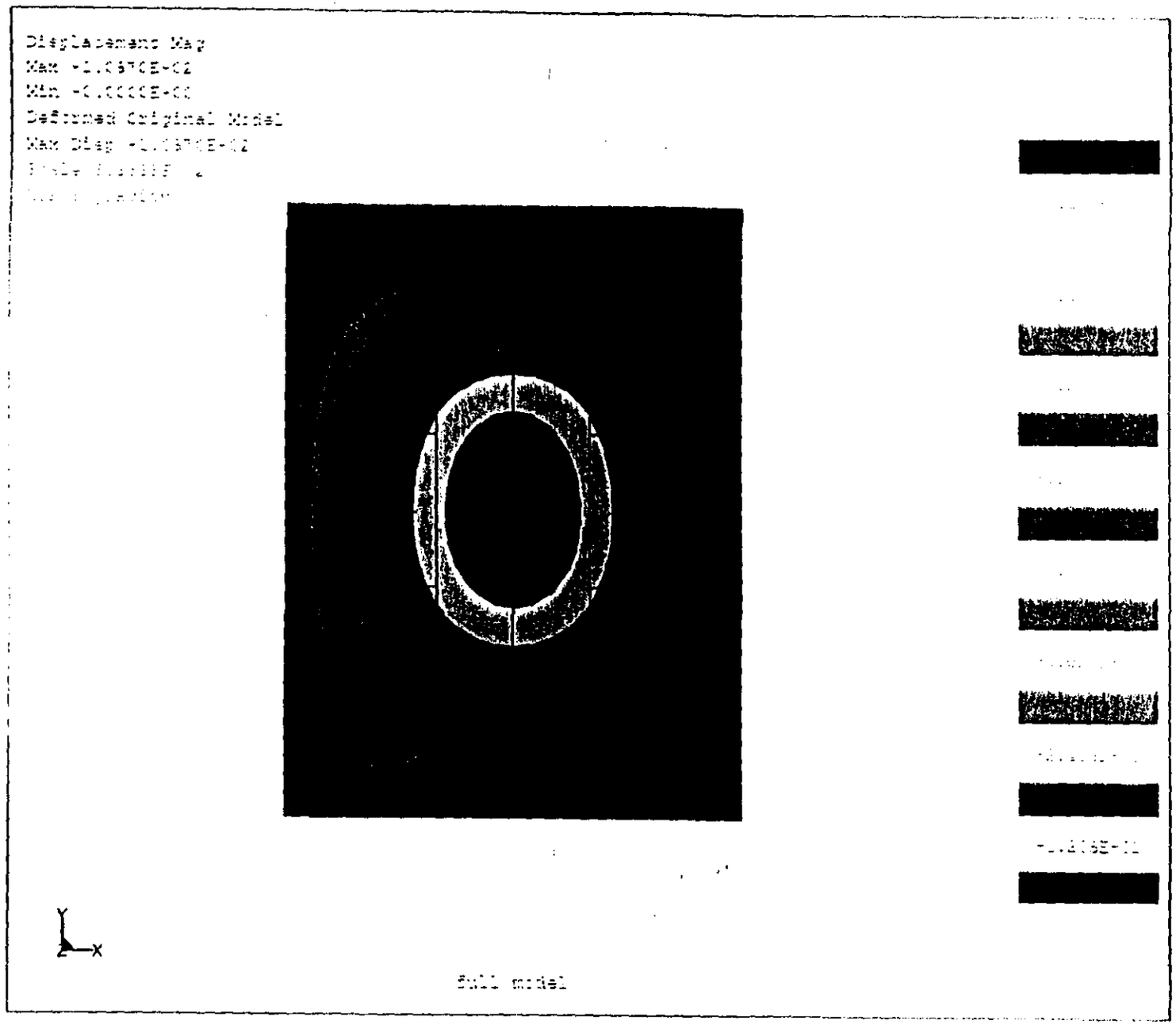

Figure 14