GEM TN-92-205

A Muon Tracking System for the GEM Detector Using Pressurized Drift Tubes

C. Bromberg
Michigan State University

October 1, 1992

Abstract:

The MSU group in collaboration with the Dubna group and other institutions from the CIS propose that the GEM collaboration adopt Pressurized Drift Tubes (PDT) for the GEM Muon Detector. The Dubna group and the MSU group each have constructed a PDT prototype chamber and delivered them to the SSC for evaluation in the TTR. The design which is discussed here and detailed in the Design Report, attached as Appendix A, is based largely on the MSU prototype but design options from the Dubna detector which can be usefully incorporated, such as integrated and shielded electronics, are noted and are being discussed within our collaboration.

A Muon Tracking System for the GEM Detector Using Pressurized Drift Tubes

Discussion of the Z-Coordinate Measurement with Stereo PDT

Discussion of a High-Speed Drift Tube Trigger

Discussion of PDT for the Endcap

October 1, 1992

Prepared by C. Bromberg
for the PDT Collaboration

Table of Contents

page

Pressurized Drift Tubes
- Introduction to Pressurized Drift Tubes 2
- PDT Characteristics 3
- Wire Positioning Accuracy 5
- Assembly Technique 5
- Chamber Gas 6
- Failure Tolerance 6
- Chamber Structure 7
- Superlayer Configuration 7
- Alignment and Structural Performance 8
- Acceptance 8
- Cost 9
- Schedule 9

Z-Coordinate Measurement with Stereo PDT
- Small Angle Stereo 10
- x-z Reconstruction 11
- How Many Stereo and Axial Planes. 12
- U and V? 12
- Cost 12

High Speed Drift Tube Trigger
- High Speed Drift Tubes 13
- On Chamber Electronics 13
- Trigger Processors 14
- System Cost 14

PDT for the Endcaps
- Endcap PDT Chambers 16
- Table of Endcap PDT Parameters 17

Pressurized Drift Tubes

Introduction to Pressurized Drift Tubes

The MSU group in collaboration with the Dubna group and other institutions from the CIS propose that the GEM collaboration adopt Pressurized Drift Tubes (PDT) for the GEM Muon Detector. The Dubna group and the MSU group each have constructed a PDT prototype chamber and delivered them to the SSC for evaluation in the TTR. The design which is discussed here and detailed in the Design Report, attached as Appendix A, is based largely on the MSU prototype but design options from the Dubna detector which can be usefully incorporated, such as integrated and shielded electronics, are noted and are being discussed within our collaboration. Referenced Figures and Tables from the attached Appendix A can be located there.

The Barrel Muon trigger and z-coordinate measurement in current baseline for GEM is accomplished with a device called an RPC (Resistive Plate Chamber). This is a new technology which will require considerable testing to raise the confidence of the collaboration (not to mention the PAC) in its viability. For this reason we attach in this document a discussion of the option to use very small-angle stereo in the PDT system for z-coordinate measurements and a discussion of the option to add layers of 1cm high-speed drift tubes using the fastest gases for trigger and timing information.

Finally, although our design has been optimized for the Barrel Muon detector, we recognize the benefits of a single technology for all muon tracking, and therefore we provide a discussion of our concept for a PDT muon system in the endcaps. We feel confident that the ultimate limitations on the operation of PDT chambers in this high-rate environment have an equal or more serious effect on the other technologies.

PDT Characteristics

Listed below are a series of points which favor the use of PDT:

- Drift tubes are a **proven high precision technology**, having been used by several groups at SLAC, CDF and E706 at Fermilab, the AMY collaboration at TRISTAN, and numerous applications at CERN. The PDT concept features a wire tension supported by the metal wall of the tubes. The wire tension has been measured to be stable over at least 10 years and therefore the wire sag can be accurately predicted over the lifetime of the detector.
- The required muon resolution (5% at 500 GeV) can be achieved with just a few drift measurements using a **non-flammable drift gas** at pressures of 2-4 atmospheres operating in the proportional amplification regime. Position resolutions of better than 100μ are expected under these conditions.

The Dubna group is investigating the effects of wire diameter and pressure. They have started with a standard gas mix of Ar-Ethane which is flammable. Their preliminary results of resolutions below 50μ at 4.8 atm. are shown at the right.

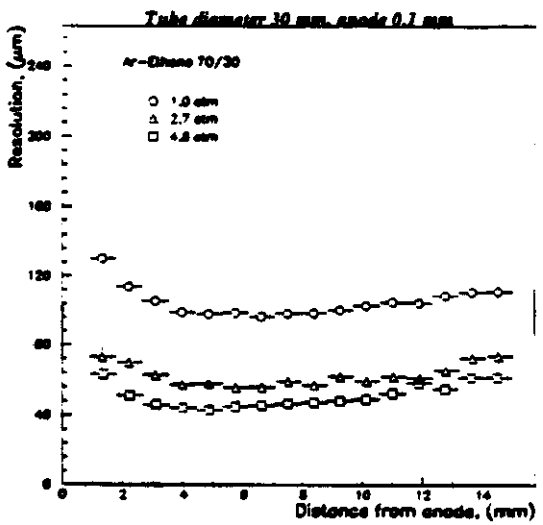

- The non-flammable gases which can be used in a PDT are compounds without hydrogen (Argon with CO2 or CF4) and thus are much **less susceptible to neutron induced backgrounds** .
- The low gas gain followed by a conventional amplifier/discriminator will have a **high rate capability** before positive ion buildup in the drift region causes drift velocity changes or inefficiency
- The **reliable gas tight seals** and the provision for a **secondary gas barrier** incorporated in the design from the outset will require no retrofit to meet any safety requirements placed on the system in the future independent of the pressure which the chamber is operated. For example, operation just above

atmospheric pressure (say 800 Torr) will satisfy safety concerns **without need to compensate for atmospheric pressure changes** because the drift gas pressure is referenced to vacuum.

- The PDT chamber is a very robust device. The **wires are physically and electronically isolated** from each other, which will insure that a rare wire breakage will cause the loss of only that tube.
- The **symmetry of the round tubes** will result in a drift time which can be simply and accurately corrected for the effects of the nearly coaxial magnetic field.
- The physical integrity of the **laminated tube structure** leads to a very strong and yet remarkably light package (the lighter of the two drift options) which need be **supported only at the ends**. This feature will ease the problems faced in the design of the support structure and alignment fixtures, and in the procedures required for installation.
- The **alignment of the chamber wires is completely determined from the ends**. This allows the design of the **sides of a PDT chamber to be free from any interference** with the alignment system and allows many options for the overlap of chamber modules in phi.
- The precision manifold plate and wire positioning system based on a mass produced precision orifice or groove will allow **an assembly procedure requiring a minimum of technical skill** , without jigs, that will be fast.
- The dead space at the end of the PDT prototype is less than 8cm and can even be reduced to about 5cm. This **very compact end treatment with a minimum of dead space** is a consequence of the manifold plate and plug design which the PDT technology makes possible.
- In the case of manifold plates longer than 1.5-2.0 meters, two plates can be made and joined permanently on an accurate jig which would transfer the precision of one plate to the other. **Precision manifold plates of any size (or shape) can be fabricated in this manner.**

There are several other advantages which a PDT system offers which can only be appreciated by viewing the completed prototype and the pictures taken during its construction. These will be addressed in the oral presentation on October 6.

Wire Positioning Accuracy

The GEM specifications (RMS) for better than 100μ position resolution from each tube (drift time-distance error in quadrature with any random positioning errors) in an 8-8-4 superlayer configuration with less than a 25μ systematic positioning error require high accuracy in the placement of each wire. Our tests show that we have achieved less than a 20m systematic and even smaller (≤15μ) random error in the manifold plate machining (see Fig. 5 in the Design Report). We have also achieved a 12μ random placement error on the location of the wire within the manifold plate hole (see Fig. 14 in the Design Report). These results can be summarized (see also Table V in the Design Report) by the following statement:

> **both 20μ systematic and 20μ random errors on the wire locations have been achieved in a large PDT prototype, and are sufficient to meet or better all specifications for GEM muon detectors.**

One important feature of the precision manifold plate design is that there are **no other contributions to the systematic error in the wire placement**. Also, we believe that alternative procedures exist for production of the manifold plates that will be even more accurate and less expensive than the plates produced for the prototype but **the existing plates are already within the GEM systematic error limits**. It should be noted that the accuracy of the wire placement relative to our fiducials is **guaranteed** by the construction of the component parts and that **no internal alignment procedures are necessary** during or after assembly to achieve the stated resolutions.

Assembly Technique

The PDT design incorporates a number components which simplify the assembly. The aluminum tubes are terminated by a two part plug (Figs. 7-10 in the Design Report). The first part of the plug is crimped into the tube end by a magnetic crimping device which was constructed at MSU specifically for this purpose. The second part of the plug which looks like a hollow bolt (Figs. 9 and 10 in the Design Report) is threaded to mate with the first part of the plug. The assembly procedure for the chamber is greatly simplified by this two part plug: the manifold plates are rigidly mounted on the assembly table at the correct separation, the pre-plugged tubes are placed one layer a time between the manifold plates and the bolts are then inserted through the manifold plate into the plugs. The bolt is gas sealed in the manifold plate and in the crimped plug via O-rings.

Chamber Gas

Our design is focused on the use of non-flammable gases which are commonly used in drift chamber systems where safety concerns prevent the use of a flammable gas mixture. Nevertheless, there are some advantages to using flammable gas mixtures which, if the safety concerns can be successfully addressed, we would prefer to have available to us. Therefore, our design incorporates a secondary gas barrier which completely encapsulates both the gas volume and the electrical feedthroughs of each tube; this region can be flushed with an inert gas which will then be continuously monitored for chamber gas leaks. The secondary gas barrier will prevent chamber gas from entering the volume surrounding the detectors. If a detector develops a leak, valves will allow the chamber gas to be shut off to that detector before a flammable mixture can be reached in the flush gas. The MSU prototype has such a barrier which will be demonstrated to those responsible for safety decisions.

Failure Tolerance

As pointed out earlier the failure of a wire is a very minor occurrence. A leak when using a non-flammable gas will easily be handled by our secondary gas barrier. The chamber gas will simply exit through that system which is flushed with an inert gas. We currently are observing a leak rate of 0.5%/hr of over pressure from the prototype. This leak rate is consistent with our tube testing procedures. Those procedures pumped each tube up to 50 PSIG with helium and then the gauge was observed 1 minute later. We discarded any tube (3 tubes out of 150 tested had a small crack in the 300μ aluminum wall) which showed a pressure drop of 0.5 PSIG in that time or 1%/minute. If there were a single tube with pin-hole leak just below our single tube test sensitivity and the rest of the tubes were gas tight a total leak rate similar to that observed for the full prototype would result. We recognize that in the future each tube must be tested under pressure with a more sensitive leak detector to spot smaller cracks than we found. The O-rings, however, never leaked.

These observations can be summarized as:

Total Chamber Volume:	500 liters
Current Observed Leak Rate on Prototype:	0.04 liters/min. (@ 1 Atmosphere of overpressure)
Expected Leak Rate:	<0.01 liters/min
Typical Flow Rates (Chamber and Flush)	1.0 liters/min

It should be noted that the current observed leak rate is less than 2.5 liters/hr = 0.1 Cf/hr (@ 1 Atmospheres of overpressure) which is a leak rate well below the level considered dangerous in a ground level detector hall for chambers even without the prototype's secondary gas barrier.

Chamber Structure

The PDT prototype described here is a very light and rigid package. As the tubes are being layered up between the manifold plates and side jig blocks, structural epoxy is placed between the tubes and between the tube layers. The epoxy cures overnight securing the tubes into a single package which, by construction, is perfectly matched to the manifold spacing. A foam spacer is later glued to the surface of the tubes and a 1/4" hexcell cover is then glued completely around the chamber to form the second gas barrier and to protect the tubes from accidental damage. The chamber rests on the two manifold end plates and is stiff enough so that no sag is perceptible in the center of the package. The chamber can be easily lifted from eyes which bolt onto the manifold plates.

Superlayer Configuration

The PDT design presented here has considerable flexibility in its ability to accommodate various superlayer configurations, tube diameters or support structures. Using the current tube diameter and tungsten wire, however, chamber lengths beyond five meters are near the operational limits of the technology. Since our prototype has 3.6 meter tubes a few five meter long tubes will be tested in the near future. The segmentation of the superlayers in z will be dictated by alignment issues. The PDT design has a very compact endplate design with accessible mounting points referenced to the wire locations. This means that the chambers can literally be placed as close to each other in phi as the mechanical independence tolerances will allow. The PDT chamber design is very flexible in its ability to accommodate various azimuthal segmentation. Both the 16 and 32 azimuthal sector solutions are acceptable with a preference for the 32 sector solution to limit the width of chamber modules. It is also quite feasible to make the tubes conform to the surface of a cylinder. While this option would be adopted only if necessary, it does show the flexibility of the PDT design to meet the GEM criteria.

Alignment and Structural Performance

The PDT physics performance will depend on the ability of the chambers to maintain a constant tension on the tungsten wires. The wires will stretch nearly 2 cm under the standard tension and thus a 5% change in the tension would require a 1mm change in the overall length. Changes in the length of the tubes due to normal temperature or pressure variations will always be less than 1mm. Tungsten wires sag by about 200-300μ so that the wires must be installed with an accurately set tension to be able to predict the location. Recent data taken by the Dubna group (see Fig. 16 of the Engineering Review), show that a 1% RMS accuracy in the wire tension (a few microns in sag) has been achieved.

While we are confident that these detectors can achieve the desired resolutions with tungsten wires, we are also pursuing a parallel R&D project with Textron, a US company specializing in the development of high-strength, low density fibers. We have contracted with them to produce 2km of a fiber, 50μ in diameter, with low resistance and a density nearly an order of magnitude less than tungsten with a tensile strength at least a factor of two higher than tungsten. If the development is successful and the fiber proves to be usable in PDT chambers then these wires will sag twenty times less than tungsten wire, 10-15μ, which could almost be ignored.

When the alignment components are designed we feel confident that mounting of these components on the PDT endplates will be relatively simple. We note again here that the accuracy of the wire placement relative to our fiducials is guaranteed by the construction of the component parts and that no internal alignment procedures are necessary during or after assembly and that the sides of the chamber are completely free of alignment fixtures which will allow overlap of the chambers in phi without difficulty.

Acceptance

We are confident that the PDT system as currently envisioned can provide coverage of phi and theta which is equal to or better than any of the other technologies being considered. The mating, or overlap, of chamber edges in azimuth can be accomplished with no loss of acceptance and with only minor losses in efficiency compared to the center of each chamber. Also, the very small dead space at the chamber ends (< 2%) will permit only small acceptance losses in z; the level of these losses will be determined more by the alignment hardware than by the PDT chamber construction.

Cost

The costing of the PDT system has been thoroughly analyzed for the 16 segment design with 288 total chambers and 3.8 cm diameter tubes in an 8-8-4 superlayer configuration and with a 3-3-3 segmentation in z. These estimates (given in Table 3 of the Design Report) are the source for the information contained in the GEM Muon Subsystem Cost Matrix (we recently updated the information in the table to show the 3-3-3 configuration). We reconfirm these estimates and feel even more confident of their correctness and ability to absorb various changes in the design without noticeable increases in cost. In particular, the labor costs are thought to be well within the capabilities of the Dubna group even if some escalation occurs due to an increase in the number of chambers to be constructed should the 32 sector design be chosen.

We restate the bottom line here:

Number of Chambers	= 288 (16-Sectors)
Number of Channels	= 114,000
Component Cost	= 6.159 M$ (No Taxes)
Labor Cost	= 130,000 hrs @ 25$/hr = 3.25 M$

Schedule

Certain components of the PDT design presented here are unavailable in the CIS. These include thin-walled aluminum tubes, some injection molded parts, precision manifold plates, hexcell panels, etc. Within these limitations a clear path to the chamber construction has been worked out. The parts that cannot be obtained in the CIS will be purchased in the US. Assembly of the tube ends, including the magnetic crimping and joining of the manifold plate halves may also be performed in the US. These components will then be shipped to Dubna for assembly and wiring of the chambers, installation of the electronics and tests. Completed chambers will then be shipped to the SSC lab for installation. Based on the labor estimates provided by the Dubna group, their facility is capable of assembling 3-5 chambers/week. At this rate the full chamber system can be assembled in 3-4 years depending on the number of chambers (azimuthal sectors) being constructed.

Z-Coordinate Measurement with Stereo PDT

Small Angle Stereo

Small angle stereo wires are a common method of obtaining two dimensional information on track crossing points. The second coordinate is measured with a resolution which scales like s/y where y is the stereo angle and s is the resolution of the first coordinate wires. We will be considering here angles with are not larger than 10 mrad, and therefore, z-resolutions of about 1 cm result; this is well within the GEM requirements. The mounting of stereo tubes can be accomplished easily with our precision manifold plate. Two rows of holes would be displaced vertically so that the two stereo layers could pass over the previous layers without interference. These holes would be drilled in the plate at the small stereo angle so no unnecessary stresses would be placed on the tube and plug assembly. Otherwise, no other changes would be needed to impliment stereo tubes.

The small angle usually leads to an unambiguous matching of the wire hits even in multitrack events. Since the plan is to have six stereo planes (two in each superlayer) it will be rare to need the vertex constraint to determine the track angle. Once the second coordinate is known the stereo planes can be used in a global fit for the optimum track parameters in both coordinates.

In this discussion of stereo reconstruction a local sector coordinate system is used with the z-axis parallel to the beam. The x-axis lies in the plane of, and perpendicular to, the wires while the y-axis is perpendicular to the wire planes. Tracks are defined by the parameters x(r) which determines the transverse momentum of the track and z(r) which determines the longitudinal component of momentum. In the case of a magnetic field mostly in the z-direction, as exists in the Barrel, the coordinate $\theta(r)$ can be described by just a small number of parameters (namely θ, for pure B_Z).

x-z Reconstruction

The utilization of the stereo view information follows the familiar path. The x-coordinate of a track at the Stereo planes is determined by projection of the x-track to the appropriate r. Using this x-coordinate and the stereoscopic measurements from a U-U' pair of planes the z-coordinate of the track can be determined. This technique is shown schematically in Figure 1. If unique z-positions can be determined in two superlayers, which will typically require at least three good Stereo measurements (out of six total), then the parameters θ and z(0) of the track are determined independently and can be checked for consistency with the vertex location. A vertex constraint will be required to remove left-right (l-r) ambiguities in the z-position where only one Stereo plane is used in each of two superlayers and when θ must be determined from a pair of Stereo plane measurements in the same superlayer.

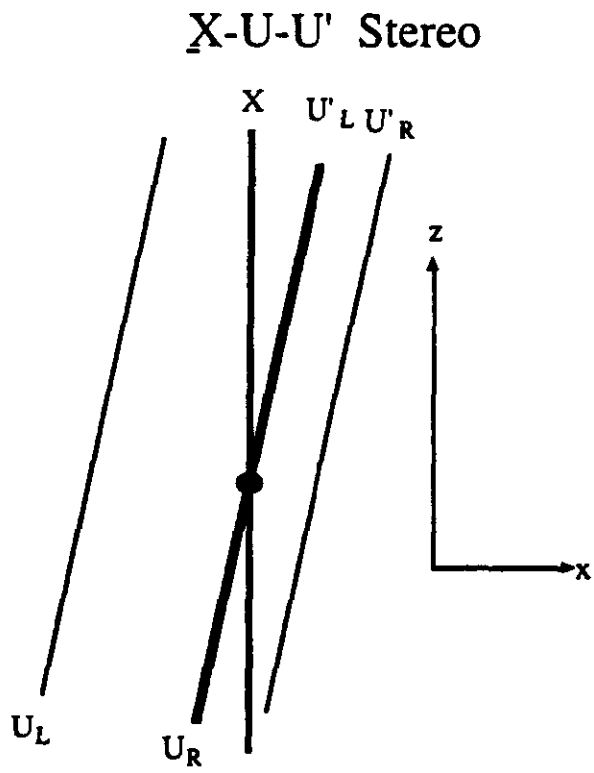

Figure 1

The z-coordinate determined from the x-coordinate and staggered U-U' drift tubes .

How Many Stereo and Axial Planes?

The PDT and LSDT systems have been designed under the assumption that the planes would be arranged in an 8-8-4 layout with axially oriented wires. It has been noted during discussions in the Muon Group that four planes in the last superlayer is marginal, particularly for muons which are accompanied by neighboring tracks; a situation which occurs quite often. It has also been noted that for the highest momentum muons the innermost superlayer will often be crowded with associated background generated by the muon itself. For this reason and considering the facts presented in the previous section, we recommend the following arrangement for the PDT system which would allow stereo reconstruction of the a second coordinate and not degrade the momentum resolution or pattern recognition capabilities of the system:

1. **Add 2 planes of Stereo wires to superlayer-I**
2. **Convert 2 planes of superlayer-II to Stereo wires.**
3. **Add 2 planes of Stereo wires to superlayer-III.**

Once the preliminary q-parameter of the track is known the conversion of the 2 planes in the superlayer-II to stereo will not result in any loss of momentum resolution. A multi-parameter fit for both the momentum and q of a track will yield the best resolution in the parameters. The Stereo tubes in superlayer-III will significantly improve the reliability of the last superlayer in addition to providing the z-coordinate.

U and V?

While either U-U' or U-V pairs in each superlayer would work well, the mechanical advantage of having consecutive U-U' pairs in each superlayer, the software advantage of resolving the l-r ambiguities locally in most instances, and the additional background rejection capabilities which two planes of a second view in each superlayer would yield, suggests that U-U' pairs in each superlayer is the correct choice.

Cost

The total number of channels in the PDT system will increase by about 20% or about $2M in materials and labor costs and about $0.2M in amp/disc/cable costs. This compares very favorably with the costs of the RPC technology for z-measurement. If some reductions in this cost are required, one can consider using larger diameter tubes in superlayer-III.

High-Speed Drift Tube Trigger

High Speed Drift Tubes

In the previous section it was shown that the PDT design could incorporate z-measurements with little difficulty apart from the costs of the 20% additional channels needed. Here we consider the addition of two staggered layers of small rectangular cross section (1cm × 1cm) tubes into each superlayer to provide a transverse momentum trigger and a definition of the bucket crossing time t_0. A total of 150,000 tubes will be required. Supports may be needed at one or more points along the length of the longest tubes in order to avoid electrostatic instabilities but this poses no fundamental problem as the precise wire positioning is not required. Also the tubes will be initially open on one side to facilitate fast wiring.

These tubes will have an independent gas manifold so that one could by the choice of gas and pressure (perhaps even well below atmospheric pressure) optimize the speed. CF4 based gases will have 100 nsec full-drift times while 50 nsec full-drift times are possible with CH4 based gases.

On Chamber Electronics

To identify the bucket crossing the time resolution of the amplifier and discriminator on each tube can be 4-5 nsec compared to the 1-2 nsec required for the PDT system electronics. Therefore, the amplifiers on these tubes can have a longer integration time resulting in a larger gains at the same signal to noise ratio. The amplifiers will be located on opposite ends of the tubes in the two layers which will cancel the effects of the propagation of the signals along the wires. The analog signals are then be routed via cables to a common location on each chamber, where a coincidence between staggered pairs will be formed. This coincidence will have a maximum width of 1/2 the drift time (25 nsec for the fastest gases); the maximum width occurs when the track is located directly over one wire of the staggered pair while the minimum width occurs when the track passes directly between wires (track slopes are relatively unimportant due to the short distance between layers, < 1 cm, and the high drift velocity, 10-20 nsec/mm, and are correctable on average at each location).

The centroid of the coincidence pulse (i.e.., the mean-time) will have tails which extend beyond the single bucket boundaries. Requiring a majority-coincidence, 2 out of the 3 trigger stations, in the expected track road will reduce these tails. It is clear in this discussion that using the fastest gases (i.e.., methane based) bucket crossing identification will be better.

Trigger Processors

The optimum t_0 determination from this fast-drift tube system can be obtained with a processor which makes use of both times from staggered tubes. The processor would have to decide the true bucket crossings within the 2-5 bucket crossings which were possible depending on the gas used. The processor algorithm would be the same in each case, but the sensitivity to rate and backgrounds would be greater with the slower gases; with a methane based gas the processor would have only a binary decision to make. The momentum determination will be handled by another processor, 1 for each segment (96 segments = 16 sectors × 6 z-sections), which makes a simple straightness cut.

System Cost

No detailed study of the costs for this system have been made. The accuracy needed in these chamber is considerably less than for the PDT system and the construction differences makes scaling from its costs difficult. The number of trigger chambers would be the same as the number of PDT chambers but each would contain only 2 planes with about 4 times the number of tubes. Clearly a mass wiring technique is essential to reduce the costs per tube as is the fabrication technique for the tubes themselves. Assuming that the material costs will scale with the weight of the chambers we find that it takes a factor of 6/20 (# of trigger planes/# PDT planes) to scale from the PDT to the trigger chambers resulting in a material cost of $2M. Assembly costs will more than likely scale with the number of tubes. This implies that the assembly costs for the trigger chambers and the PDT system will be approximately equal which leads to an estimate of 3M$ for assembly. Electronics will be much less expensive per channel than the PDT versions and readout can be limited to trigger status only. Under the assumption that an allocation of 10$/channel (150k channels) for the amplifier and discriminator and 5k$/processor (400 processors) for the trigger processors brings the total system cost to 8.5 M$.

Here is a summary of the High Speed Drift Tube Barrel Muon Trigger System Costs:

	Item	Estimated Cost ($M)	
1.	Chamber Materials	2.0	
2.	Chamber Assembly Labor	3.0	
3.	On-Chamber Amp/Disc/Cable	1.5	
4.	Trigger Processors	2.0	
	Total	8.5	(5M$ in Chamber Costs)

PDT for the Endcaps

Endcap PDT Chambers

The earlier discussion of the 2-dimensional capabilities of PDT chambers using Stereo tubes suggests that a similar system would work for the endcaps except that the stereo angle would be larger. The issue which prevented the PDT technology from being considered seriously for the endcap was that few felt that the trapezoidal chambers which would be needed could be designed and built. Our manifold plate design, which greatly simplifies the assembly and guarantees the accuracy of our Barrel PDT prototype, can easily be modified to be appropriate for a trapezoidal chamber. Superlayer modules with 4 planes of tubes in each of two views, with the two views having tubes running parallel to the long sides of the trapezoid would have excellent momentum resolution based on measurements with a position resolution/tube of 100μ on the r·φ(z) function and a 350-500μ resolution in the r(z) function.

The complete specification of PDT chambers for the Endcaps can be found in the table on the following page. To adjust the tube diameters we noted that the rates increase as one approaches the flux concentrator and decrease as the z increases. Therefore, we have adjusted the diameter of the tubes and the length of the two segments in azimuth to keep the rate fairly constant in all channels. There will be 96 chambers and about 60k channels in each Endcap. Thus the total number of chambers will be about 2/3 of the Barrel system but will contain about 10% more channels. The same high-speed drift tube (HSDT) chambers that are used in the Barrel for triggering would also be used (with tapered tubes) in the Endcaps. A crude estimate the cost of the Barrel/Endcap system is given below, but certainly the Endcap system cost will be less than or equal to the cost of the Barrel system.

Full Barrel and Endcap PDT/HSDT Cost

Item	Barrel Cost (M$)	Endcaps Est. Cost (M$)
PDT Materials and Labor	9.4	6.2
PDT Amp/Disc/Cable	1.1	1.2
HSDT Materials and Labor	5.0	3.4
HSDT Amp/Disc/Cable	1.5	0.8
HSDT Trigger Electronics	2.0	1.3
Total Cost	19.0	12.9

GEM- PDT END CAP CHAMBERS

INPUT PARAMETERS:

Tube Material, density:	Alum.	2.7
Tube Wall: (mm)	0.30	
M. Plate Thickness (mm), density	19.05	2.7
Case Thickness (mm), density:	6.40	0.25

VARIABLES:

Z Location (m):	5.8	6.1	10.5	11.5	14.8	16.0	Total
Inner Azimuth	17.0	9.0	17.0	9.0	17.0	9.0	
Outer Azimuth	28.0	17.0	28.0	17.0	28.0	17.0	
# of Segments:	16	16	16	16	16	16	
# of Layers:	8	8	8	8	8	8	24
Tube Dia: (mm)	20.0	10.0	30.0	15.0	40.0	20.0	

RESULTS:

Tube Length: (m)	1.3	0.9	2.4	1.7	3.3	2.4	
Tubes/Chamber:	480	592	592	736	624	768	
Chamb. width: (m)	1.23	0.74	2.22	1.40	3.13	1.95	
Chamb. thick.: (m)	0.26	0.18	0.34	0.22	0.42	0.26	
Weights (lb)							
Tubes:	70	30	236	105	467	203	
Manifold plates:	72	30	171	70	298	115	
Plugs:	47	42	73	62	94	75	
Case:	16	7	48	21	93	40	
Electronics,cable:	240	296	296	368	312	384	
Total/Chamber:	445	405	824	626	1264	816	
Weight/Half:	7126	6476	13190	10012	20220	13060	40536
Tubes/Half:	7680	9472	9472	11776	9984	12288	60672

Appendix A

Design of a Pressurized Drift Tube System for the GEM Muon Detector

September 22, 1992

Prepared by C. Bromberg
for the PDT Collaboration

Table of Contents

page
Introduction....1
PDT General Design Concept....2
PDT Weight....2
Wire Support (End Plug/Gas Manifold Design)....3
Gas Systems....6
Chamber Structure....6
Superlayer Configuration and Support Structure....7
Electronic Packaging Requirements....7
Size Limitations and Utility Routine....8
Failure Tolerance....8
Manufacturing Approach, Philosophy,Schedule,etc....9
Alignment and Structural Performance....9
Coverage....10
Cost....10
Tables....11
Figures....16

Introduction

The MSU group in collaboration with the Dubna group and other institutions from the CIS presents here a design study of a Pressurized Drift Tube (PDT) system for the GEM muon detector. Both groups have constructed prototypes of PDT chambers. The design presented here is based largely on the MSU prototype but design options from the Dubna detector which can be usefully incorporated at a future date are noted.

The PDT design will emphasize a) reliable, gas tight seals; b) precise placement of wires utilizing a precision end plate/gas manifold; c) tubes bonded together as unit; d) an assembly procedure which can be performed with a minimum of technical skill, and e) a high level of gas safety features.

The prototype to be delivered to the SSC the week of September 28 is identical to the design presented here. An assembly drawing of the chamber is shown in Fig. 1. The electronics for the prototype are standard, off-the-shelf, amplifier/discriminator cards, and therefore will exhibit characteristics which can be improved upon both in physical size and in electronic performance with components specifically optimized for the GEM detector.

PDT General Design Concept

The GEM SSC collaboration is considering two types of drift chamber systems for the barrel section of the Muon Detector. From our perspective the Pressurized Drift Tube (PDT) option has the following specific advantages:

a) Drift tubes are a proven high precision technology, having been used by several groups at SLAC, the CDF group at Fermilab, the AMY collaboration at TRISTAN, and numerous application at CERN. The wire tension, supported by the metal wall of the tubes, has been measured to be stable and can be accurately predicted over the lifetime of the detector.
b) The required muon resolution (5% at 500 GeV) can be achieved with just a few drift measurements using a non-flammable drift gas at pressures of 2-4 atmospheres.
c) These non-flammable gases are compounds without hydrogen (Argon with CO2 or CF4) and thus are much less susceptible to neutron induced backgrounds; the proton nucleus of a hydrogen atom struck by a neutron can be given enough energy to be observed in all tracking detectors.
d) The PDT chamber is a very robust device. The wires are physically and electronically isolated from each other, which will insure that a rare wire breakage will cause the loss of only that tube.
e) The symmetry of the round tubes will result in a drift time which can be simply and accurately corrected for the effects of the nearly coaxial magnetic field.
f) The physical integrity of the laminated tube structure leads to a very strong and yet remarkably light package which need be supported only at the ends. This feature will ease the problems faced in the design of the support structure and alignment fixtures, and in the procedures required for installation.
g) The alignment of the chamber wires is completely determined from the ends. This allows the design of the sides of a PDT chamber to be free of any interference with the alignment system and allows many options for the overlap of chamber modules in phi.

PDT Weight

The weights of the various components in the PDT system are given in Tables 1 and 2.

The first table is for 16 azimuthal sectors while the second is for 32 sectors. As can be seen the overall weight is nearly unchanged between the two options. Changing the tube diameter will have a minimal impact on the chamber weight especially if the tube wall thickness can be reduced but the electronics and cabling will increase proportional to the number of additional channels. Changing the segmentation in z (longer or shorter tubes) will have an impact on the overall weight. The number of components and therefore the weight, except the tubes and cases, scale with the number of chambers.

Wire Support (End Plug/ Gas Manifold Design)

The end plugs and gas manifolds are the most critical components in the design. The plugs must seal the end of the tube at up to 4 atmospheres of pressure while providing a passage for the flow of gas through the tube, they must insulate the high voltage on the anode wire from the tube and provide for electrical contact between the conductive surface of the tube and the grounded gas manifold, and they must center the tube on the wire with moderate precision (to within 500 μm) and allow for the highly accurate relative positioning of the wires (to within 25 μm). The design uses standard parts, such as O-rings, wherever possible and takes advantage of modern mass production techniques, such as injection molded plastic or automatic screw machines and our own magnetic crimping device.

A. Gas Manifold:

Drawings of the gas manifold are shown in Figs. 2-4. One should note that the specification in Fig. 4 for the hole placement is a "true position" specification. The tolerance of 0.002" means that the true position of the hole centers in the manifold must lie within a circle 0.002" in diameter. This two dimensional specification and is even more restrictive than the relative position specification of ±0.001". In addition, it is important to realize when evaluating these specifications that all physics specifications are expressed in RMS deviations from nominal positions. For randomly distributed hole centers about the nominal positions our specification would yield a 10μ contribution added in quadrature with all other contributions to the position resolution. For an intrinsic resolution of 100μ from the drift time measurements the contribution of our hole specification to the total error would be entirely negligible.

If the position errors are systematic, as the measurements on one of our prototype manifold plates shown in Fig. 5 indicate, then the physics limit is 25μ

and not 100μ. We find that the machine shop was unable to hold our tolerances, achieving only 20μ RMS on the systematic hole placement. One important feature of the precision manifold plate design is that there are **no other contributions to the systematic error in the wire placement.** Also, we believe that alternative procedures exist for production of the manifold plates that will be more accurate and less expensive than these plates but **the existing plates are already within the GEM systematic error limits.** Although we will mention this again later in the alignment section, it should be noted that the accuracy of the wire placement relative to our fiducials is guaranteed by the construction of the component parts and that no internal alignment procedures are necessary during or after assembly.

B. Tube End Plug:

A section drawing of the region of the chamber near the tube ends is shown in Fig. 6. The aluminum tube is terminated by a two part plug whose details are shown in Figs. 7-10 and machined from glass filled (15%) Delrin. We have determined that production of an injection-molded part is feasible and, based upon a firm quotation, will be much less costly but may require the use of a different material. The large plug part, Figs. 7 and 8, has an O-ring which insures a good gas seal. This plug part is crimped into the tube end by a magnetic crimping machine which was constructed at MSU specifically for this purpose. The compressive force on the tube walls needed for the crimp is produced by the interaction of a rapidly changing magnetic field (created by discharging a capacitor through a copper coil wrapped around the tube) with the induced current. The tube can be crimped in a highly repeatable fashion with this device. The plug has been shaped so that the tube, once crimped, holds the plug firmly and the tube is wrapped neatly over the plug. This allows easy electrical contact from the tube wall to the manifold plate through a phosphor-bronze spring.

The second part of the plug, Figs. 9 and 10, looks like a hollow bolt. Three small O-rings make up the gas seal. The threads on the bolt need not be precise as the first O-ring (the one closest to the threads) seals the bolt into the plug. The remaining two O-rings on the bolt seal above and below the gas channels in the manifold plate. Gas flows through a hole in the bolt into the tube and is removed by an identical plug at the opposite end of the tube. The assembly

procedure for the chamber is greatly simplified by this two part plug: the manifold plates can be rigidly mounted on the assembly table at the correct separation, the pre-plugged tubes placed between the manifold plates and the bolt then inserted through the manifold plate into the plug.

C. Wire Location:

The wire is located in the manifold plate by a precisely drilled jewel which itself is positioned accurately on the centerline of the bolt near its head. At this location on the shaft of the bolt is a spherical surface designed so that the bolt fits precisely in the center of a manifold plate hole but can still change its angle somewhat to adjust to small imperfections in the bolt and plug manufacture (particularly in the threads) while not disturbing the precise centering of the jewel. The parts of the wire location system are shown in Figs. 11-13.

To wire a tube, the 50μ tungsten wire is attached to thin stiff rod which is then passed through the hollow of the bolts in both ends. The tungsten wire is removed from the rod and threaded through the jewel hole in both pins and the pins are then pressed into the bolt heads. The wire is tensioned, held firmly by a high tensile strength silver alloy solder and then epoxy is injected into a small hole which gas-seals the pin and provides a second mechanical hold on the wire. The solder we use (Sn62) has also been recommended for its lower gold amalgamation properties.

We have made some recent measurements on the accuracy of the jewel hole placement in the center of the manifold plate holes. This was done by a inserting a plug in a spare manifold plate and focusing a microscope on the center of the 50μ hole in the jewel. The plug was then slowly rotated in the hole. The center of the hole in the jewel moved in a circle whose diameter was recorded. Without moving the microscope a series of other plug and jewel combinations were inserted in the same hole and similar measurements made on them. The data are shown in Fig. 14, where we have chosen a random rotation for each jewel while the error in the concentricity is taken from the measurements. The RMS displacement of the jewel hole center along the manifold plate (x-direction) from the nominal hole center is 12μ. This will be a random position error and will add (in quadrature) a negligible amount to the 100μ resolution expected for the drift distance measurements.

Two other options are being considered for wire placement. These two are shown in Fig. 15. The first uses a wedge rather than solder to hold the wire while the second eliminates the jewel and eases the precision of the manifold plate by using a precise comb to position the wires while soldering.

Gas Systems

No specific problems are anticipated in the gas system. Our design is focused on the use of non-flammable gases which are commonly used in drift chamber systems where safety concerns prevent the use of a flammable gas mixture. Nevertheless, there are some advantages to using flammable gas mixtures which, if the safety concerns can be successfully addressed, we would prefer to have available to us. Therefore, our design incorporates a second gas barrier which completely encapsulates the gas volume of each detector and can be flushed with an inert gas and continuously monitored for chamber gas leaks. This second barrier will prevent chamber gas from entering the volume surrounding the detectors. If a detector is found to be leaking remote actuated valves will allow the chamber gas to be shut off to that detector before a flammable mixture is reached. Our prototype has such a barrier which we will demonstrate to the safety engineers.

Chamber Structure

The PDT prototype described here is a very light and rigid package. As the tubes are layered up between the manifold plates and side stops, structural epoxy is placed between the tubes and between the tube layers. The epoxy cures overnight securing the tubes into a single package which, by construction, is perfectly matched to the manifold spacing. A foam spacer is later glued to the surface of the tubes and a 1/4" hexcell cover is then glued completely around the chamber to form the second gas barrier and to protect the tubes from accidental damage. The chamber rests on the two manifold end plates and is stiff enough so that little or no sag is noted in the center of the package. The chamber can be easily lifted from eyes which bolt onto the manifold plates with no specific precautions to limit flexing as the package is quite stiff in all dimension.

Superlayer Configuration and Support Structure

The PDT design presented here has considerable flexibility in its ability to accommodate various superlayer configurations or support structures. Using the current tube diameter and tungsten wire chamber lengths beyond five meters are near the operational limits of the technology. Our prototype has 3.6 meter tubes. Five meter tubes would have to be tested before they could be considered for the GEM detector. The segmentation of the superlayers in z will be dictated by alignment issues. The PDT design has a very compact end plate design with accessible mounting points referenced to the wire locations. This means that the chambers can literally be placed as close to each other in phi as the mechanical independence tolerances will allow.

The PDT chamber design is very flexible in its ability to accommodate various azimuthal segmentation. Both the 16 and 32 azimuthal sector solutions are acceptable with a preference for the 32 sector solution to limit the width of chamber modules. The mating of chamber edges in azimuth can be accomplished with little or no loss of acceptance and with only minor losses in efficiency compared to the center of each chamber. It is also quite feasible to make the tubes conform to the surface of a cylinder while keeping the endplates rectangular; the holes would be located on a circular arc. While this option would be adopted only if it were necessary for physics reasons, it does show the flexibility of the PDT design to meet the GEM criteria.

The costing of the PDT system has been thoroughly analyzed for the 16 segment design with 288 total chambers and 3.8 cm diameter tubes in an 8-8-4 superlayer configuration and with a 3-3-3 segmentation in z. These estimates are given in Table 3 and are the source for the information contained in the GEM Muon Subsystem Cost Matrix (we recently updated the information in the table to show the 3-3-3 configuration). We reconfirm these estimates and feel even more confident of their correctness and ability to absorb various changes in the design without noticeable increases in cost. In particular, the labor costs are thought to be well within the capabilities of the Dubna group even with some escalation due to an increase in the number of chambers to be constructed if a 32 sector design is chosen.

Electronic Packaging Requirements

The PDT electronics will locate amplifiers and discriminators on the chamber while the digital signals will be carried off the chambers via cabling. These custom electronics

circuits will be based upon recent application in high energy physics and will be compactly located on the surface of each end-plate (the amplifiers and discriminators will not extend beyond the readout boards as they do in the prototype). Each channel of electronics will consume about 300 mW of 5 volt power. Since there are just over 100k channels, cooling for approximately 30kW of power must be provided. Since this will be spread out nearly 300 chambers, one needs to provide each chamber with about 100W of cooling. This seems like a very manageable number. The individual circuits will be cooled with a closed air flow system for each chamber or group of chambers which will have the heat removed via heat exchangers out of the detector hall. No specific design is available at this time.

We will want to have the 5V power supplies located near the chambers. This will require that AC power to be brought into the detector and properly shielded. HV supplies are not as serious as the power requirements will be much lower and longer runs of supply cable can be accommodated.

Size Limitations and Utility Routing

The average chamber will have about 20 signal cables each with 17-twisted pairs. Twenty cables have a cross sectional area 1" thick by 2" wide. There will be 600 sq. in. of cable for the barrel PDT system. We have also estimated the size of the gas lines needed. We find that 1/4" diameter piping is adequate for our flow rates through each chamber but that the size of the manifolds must increase to a total of 15 sq. in. (two 3" diameter pipes) for the inlet and outlet lines gas lines.

Failure Tolerance

As pointed out earlier the failure of a wire is a very minor occurrence. A leak when using a non-flammable gas will easily be handled by our second level gas barrier system. The chamber gas will simply exit through that system. We currently are observing a leak rate of 0.5% of the over pressure/hour from the prototype. This leak rate is consistent with our tube testing procedures. Those procedures pumped up each tube to 50 PSIG with Helium and watched for 1 minute and removed any tube (there were only 3) which showed a pressure drop of 0.5 PSIG in that time or 1%/minute. If there were a single tube with a leak at this limit while the rest were completely sealed one would have a total leak rate similar to that observed for the full prototype. We suggest that in the future each tube be tested under pressure in a water trough to spot smaller leaks than we could previously observe on a single tube.

Manufacturing Approach, Philosophy, Schedule, etc.

Certain components of the PDT design presented here are unavailable in the CIS. These include thin-walled aluminum tubes, injection molded parts, precision manifold plates, hexcell panels, etc. Within these limitations a clear path to the chamber construction has been worked out. The parts that cannot be obtained in the CIS will be purchased in the US. Assembly of the tube ends, including the magnetic crimping and joining of the manifold plate halves will also be performed in the US. These components will then be shipped to Dubna for assembly and wiring of the chambers, installation of the electronics and tests. Completed chambers will then be shipped to the SSC lab for installation. Based on the labor estimates in Table 4 the Dubna facility is capable of assembling 3-5 chambers/week. At this rate the full chamber system can be assembled in 3-4 years depending on the number of chambers (azimuthal sectors).

We will have no trouble meeting the GEM construction deadlines and within our cost estimates. There don't appear to be any items whose acquisition time is out of line with the construction schedule. As for availability, the prototype we will deliver to the SSC next week could be put into the GEM detector two weeks later and meet all of the specifications for the final product.

Alignment and Structural Performance

The PDT physics performance will depend on the ability of the chambers to maintain a constant tension on the tungsten wires. The wires will stretch nearly 2 cm under the standard tension and thus a 5% change in the tension would require a 1mm change in the overall length which is well beyond the any reasonable thermal effects in this chamber. The wires will sag by about 200-300 microns so that the wires must be installed with an accurately set tension to be able to predict the location. Recent data taken by the Dubna group and shown in Figs 16, indicates that a 1% RMS accuracy in the wire tension has been achieved and thus 1% accuracies (a few microns in sag) are possible. The total contributions to the error budget are shown in Table 5.

When the alignment components are designed we feel confident that mounting of these components on the PDT endplates will be relatively simple compared with other chamber

technologies. The alignment issues were discussed in the earlier section on the wire locating system where we noted that the accuracy of the wire placement relative to our fiducials is guaranteed by the construction of the component parts and that no internal alignment procedures are necessary during or after assembly and that the sides of the chamber are completely free of alignment fixtures which will allow overlap of the chambers in phi without difficulty.

The PDT chambers will be stiff enough to be supported only from the manifold plate edges. We are concerned, however, about vibrations of the support system near the 30 Hz resonance for our wires. To give you a sense for the problem, we are working on a scheme to measure the tension of the wires by mechanically vibrating the chambers at the resonant frequency of the wires and noting the changes in the capacitance of the wire in the tube as it displaces from the equilibrium position by a few mm. Thus we must be sure that the normal modes of vibration of the support system are far from the resonant frequency of the chamber wires.

Coverage

We are confident that the PDT system as currently envisioned can provide coverage of phi and theta which is equal to or better than any other the other technologies being considered. We certainly plan to incorporate an overlap in azimuth as this is where is the most to gain (the tension support system which was proposed earlier by Miller and Bromberg optimized the azimuthal acceptance without chamber overlaps in phi). Any further reductions in acceptance losses will require a better specification of the global alignment scheme.

Cost

This item was covered in considerable detail earlier and in the GEM muon cost review documents and are shown in Table 3 of this document.

TABLE I

GEM- PDT CHAMBER SPECS

INPUT PARAMETERS:				
Azmuth angular coverage ±:		60.0		
Tube Material, density:		Alum.	2.7	
Tube Wall: (mm)		0.30		
M. Plate Thickness (mm), density		19.05	2.7	
Case Thickness (mm), density:		6.40	0.25	
VARIABLES:				
Radius (m):	3.9	6.3	8.7	Total
# of Segments:	16	16	16	
# of Layers:	8	8	4	20
Tube Dia: (mm)	38.0	38.0	38.0	
Chambers/Half:	3	3	3	144
RESULTS:				
Tube Length: (m)	2.3	3.6	5.0	
Tubes/Chamber:	320	512	352	
Chamb. width: (m)	1.55	2.51	3.46	
Chamb. thick.: (m)	0.40	0.40	0.25	
Weights (lb)				
Tubes:	153	396	376	
Manifold plates:	142	229	197	
Plugs:	47	74	51	
Case:	35	82	137	
Electronics,cable:	160	256	176	
Total/Chamber:	537	1037	938	
Weight/Segment:	1611	3112	2814	7538
Weight/Half:	25779	49795	45030	120603
Tubes/Half:	15360	24576	16896	56832

TABLE II

GEM- PDT CHAMBER SPECS, 32 SECTORS

INPUT PARAMETERS:

Azmuth angular coverage ±:	60.0	
Tube Material, density:	Alum.	2.7
Tube Wall: (mm)	0.30	
M. Plate Thickness (mm), density	19.05	2.7
Case Thickness (mm), density:	6.40	0.25

VARIABLES:

Radius (m):	3.9	6.3	8.7	Total
# of Segments:	32	32	32	
# of Layers:	8	8	4	20
Tube Dia: (mm)	38.0	38.0	38.0	
Chambers/Half:	3	3	3	288

RESULTS:

Tube Length: (m)	2.3	3.6	5.0	
Tubes/Chamber:	160	256	176	
Chamb. width: (m)	0.77	1.24	1.71	
Chamb. thick.: (m)	0.40	0.40	0.25	
Weights (lb)				
Tubes:	77	198	188	
Manifold plates:	70	113	98	
Plugs:	23	37	26	
Case:	21	46	73	
Electronics,cable:	80	128	88	
Total/Chamber:	271	522	472	
Weight/Segment:	813	1567	1416	3796
Weight/Half:	26006	50151	45306	121463
Tubes/Half:	15360	24576	16896	56832

TABLE III

PDT COST ESTIMATE- 16 Sectors

NUMBER OF CHAMBERS:	288
NUMBER OF CHANNELS:	114000

ITEM	REQ'D (K)	COST ($)	NOTE	TOTAL ($K)
TUBES	114	29.92	2	3411
PLUGS	228	1.70	1	388
WIRE GUIDES	228	1.50	1	342
WIRE (m)	570	0.20	2	114
MANIFOLD PLATES	0.576	2500	2	1440
CASE	0.288	300	2	86
R.O. BOARDS	3.563	50	3	178
TEST/ASSEMBLY EQUIP.			3	200
	TOTAL COMPONENTS			6159
LABOR (hrs)	130	25	4	3250

NOTES:

1. BASED ON ESTIMATE FROM SOURCE
2. BASED ON PROTOTYPE, NO ALLOWANCE FOR QUANTITY DISCOUNT OR ALTERNATE METHODS
3. ESTIMATE
4. ESTIMATE (450 HRS/CHAMBER)

R. J. MILLER 8/30/39

TABLE IV

PDT AVERAGE CHAMBER ASSEMBLY: 396 Tubes

16 SECTOR, 1.5 IN DIA

Operation	Persons	Unit Time (hrs.)	Total Manhrs.
Inspect tubes	2	0.02	15.8
Cut tubes to length	2	0.02	15.8
Debur tubes	1	0.02	7.9
Clean tubes	1	0.02	7.9
Flair tube ends	2	0.01	7.9
Inspect plugs	1	0.01	7.9
Put O-rings onto plugs	1	0.01	7.9
Crimp plugs into tubes	2	0.02	31.7
Pressure test tubes	1	0.05	19.8
Inspect Manifold Plates	2	2	4.0
Assemble Manifold Plates	2	5	20.0
Setup Assembly Table	2	8	16.0
Assemble tubes into Manifold	2	0.02	15.8
Insert Wires into tubes	2	0.1	79.2
Seal plug ends	1	0.02	7.9
Install gas fittings	1	1	1.0
Pressure test assembly	2	8	16.0
HV test	2	0.02	15.8
Test wire tension	2	0.02	15.8
Assemble Case	2	10	20.0
Prepare Readout Boards	1	1	12.4
Test Readout Boards	1	0.5	6.2
Assemble Power Buses	2	4	8.0
Assemble R.O. Boards	1	1	12.4
Assemble HV Boards	1	1	12.4
Final testing	2	8	16.0
Package for Shipping	2	8	16.0
Total			418

R. J. MILLER 8/30/39

TABLE V

Error Budget

Source	Status	± Limits (μm)	Random RMS(μm)	Systematic RMS(μm)
Wire - Jewel	Calc.	5	3	0
Jewel - Bushing Bushing - Plug Plug- M.P. Hole	Meas.	25	12	0
M.P. Hole - Alignment	Meas.	50	15	20
Total			**20**	**20**

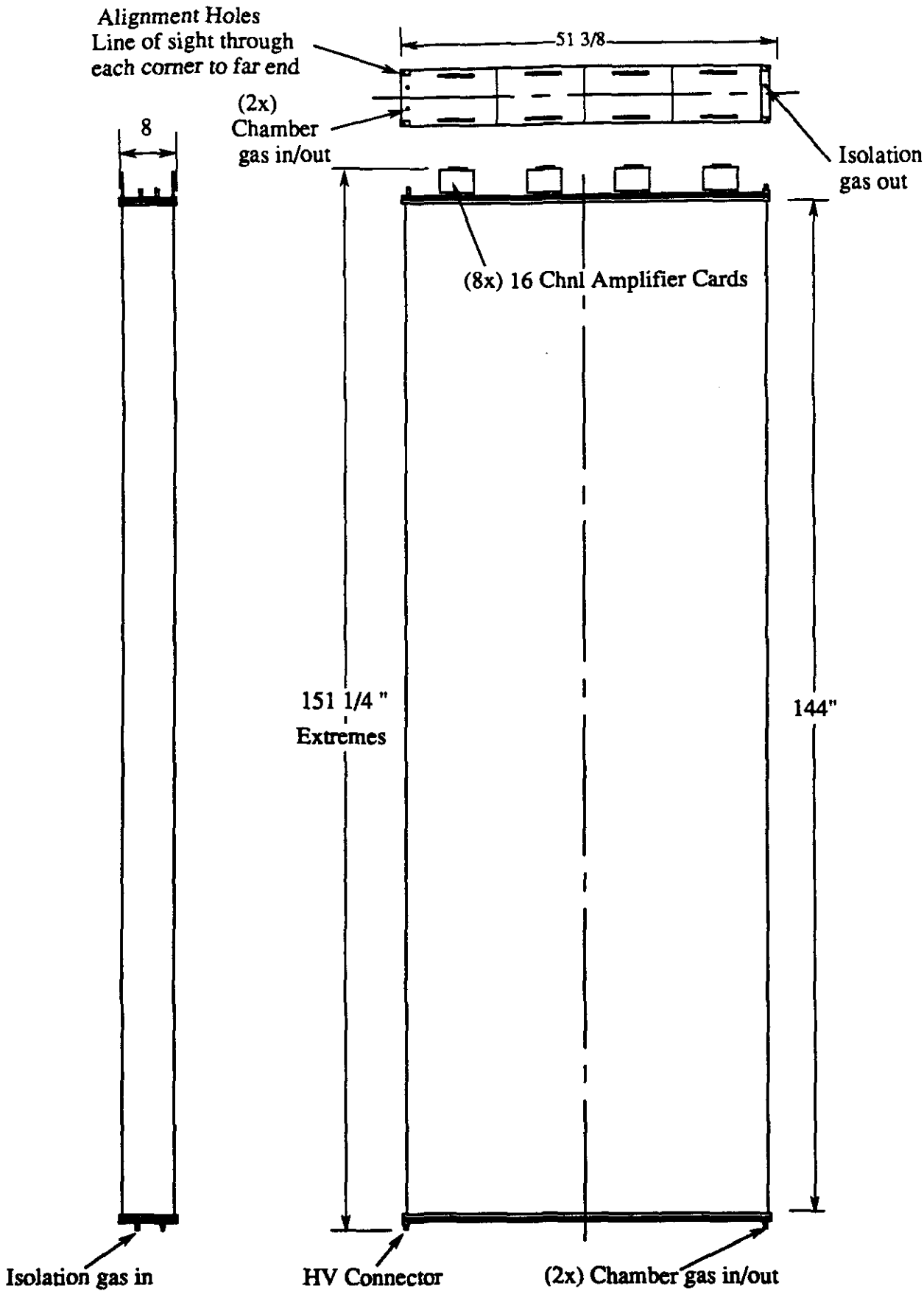

GEM PDT Prototype Assembly

HEP01-022-281-D **R. Miller** **5-14-92**

Fig. 1

A-16

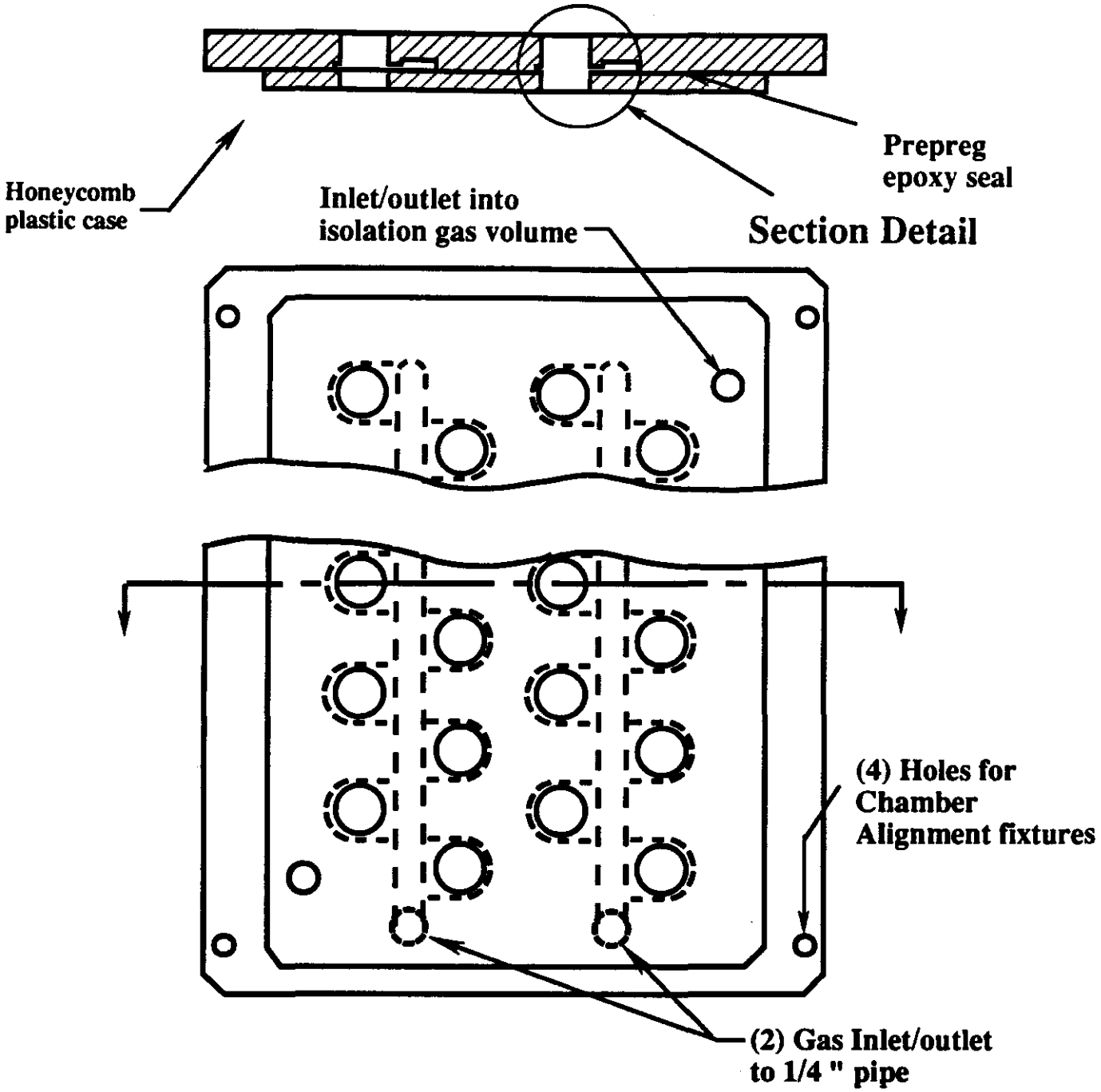

ITEM	PART NO.	DESCRIPTION	QTY.
PARTS LIST			

UNLESS SPECIFIED DECIMALS .005 FRACTNS ± ANGLES ±1.0° BREAK ALL EDGES DO NOT SCALE DWG	ORIG. R. Miller	4-13-92
	DRAWN	
	PROJECT Gem Muon PDT - prototype	
	MATERIAL Alum. jig plate	
MICHIGAN STATE UNIVERSITY HIGH ENERGY PHYSICS		
TITLE	Manifold Plate Assembly	
DWG. NO. HEP01-022-274	REV. E	SCALE 1:2

Fig. 2

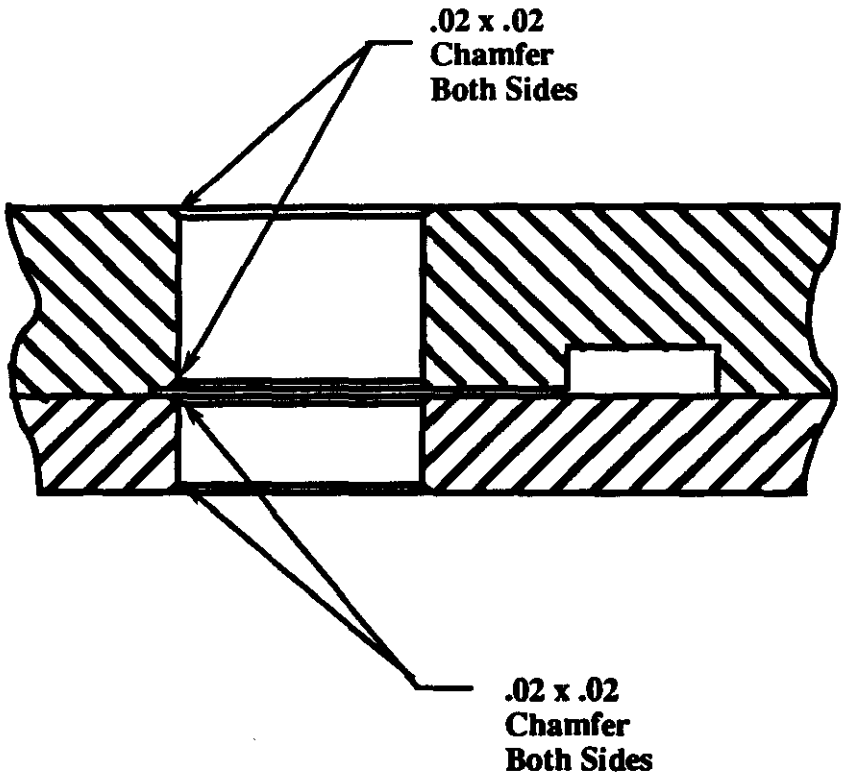

Manifold Plate : Section Detail

Fig. 3

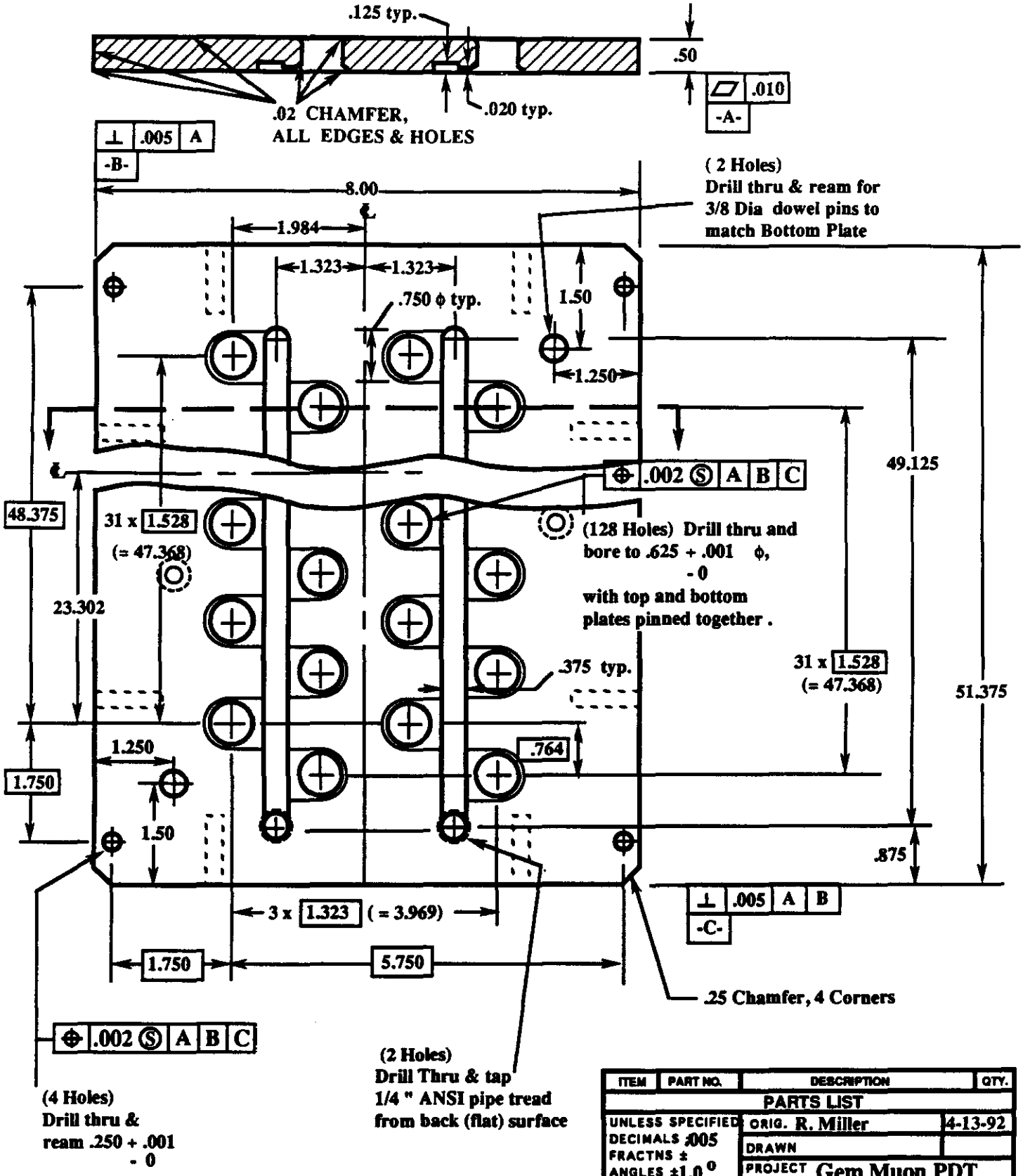

ITEM	PART NO.	DESCRIPTION	QTY.
PARTS LIST			
UNLESS SPECIFIED DECIMALS .005 FRACTNS ± ANGLES ±1.0° BREAK ALL EDGES DO NOT SCALE DWG	ORIG. R. Miller		4-13-92
	DRAWN		
	PROJECT Gem Muon PDT		
	MATERIAL 1/2 Alum Tooling Plate MIC-6		
MICHIGAN STATE UNIVERSITY HIGH ENERGY PHYSICS			
TITLE Top Mainfold Plate-Pattern A			
DWG. NO. HEP01-022-272-A	REV. E	SCALE 1:2	

Fig. 4

Manifold Plate Hole Placement

Aug. 4, 92

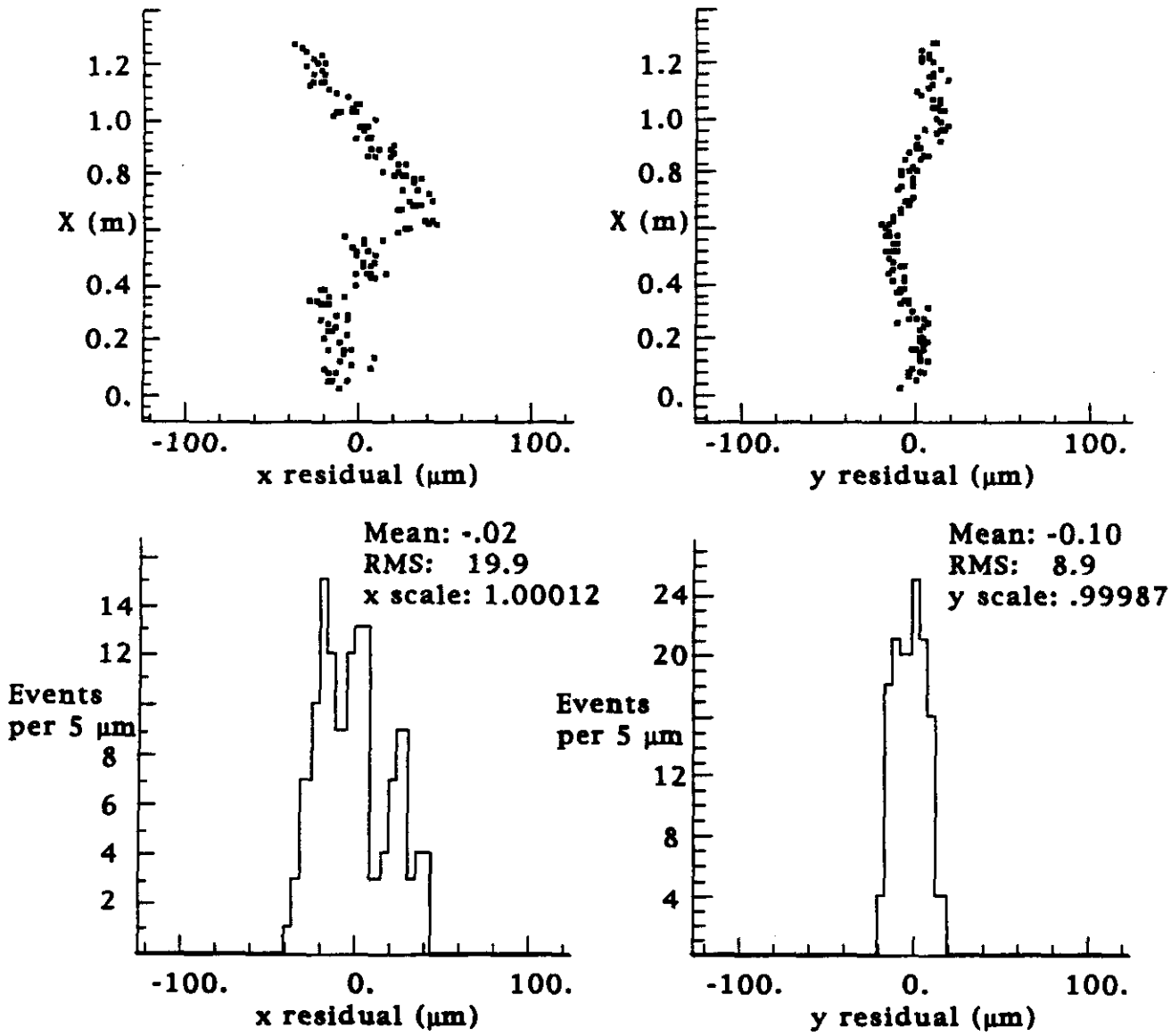

Fig. 5

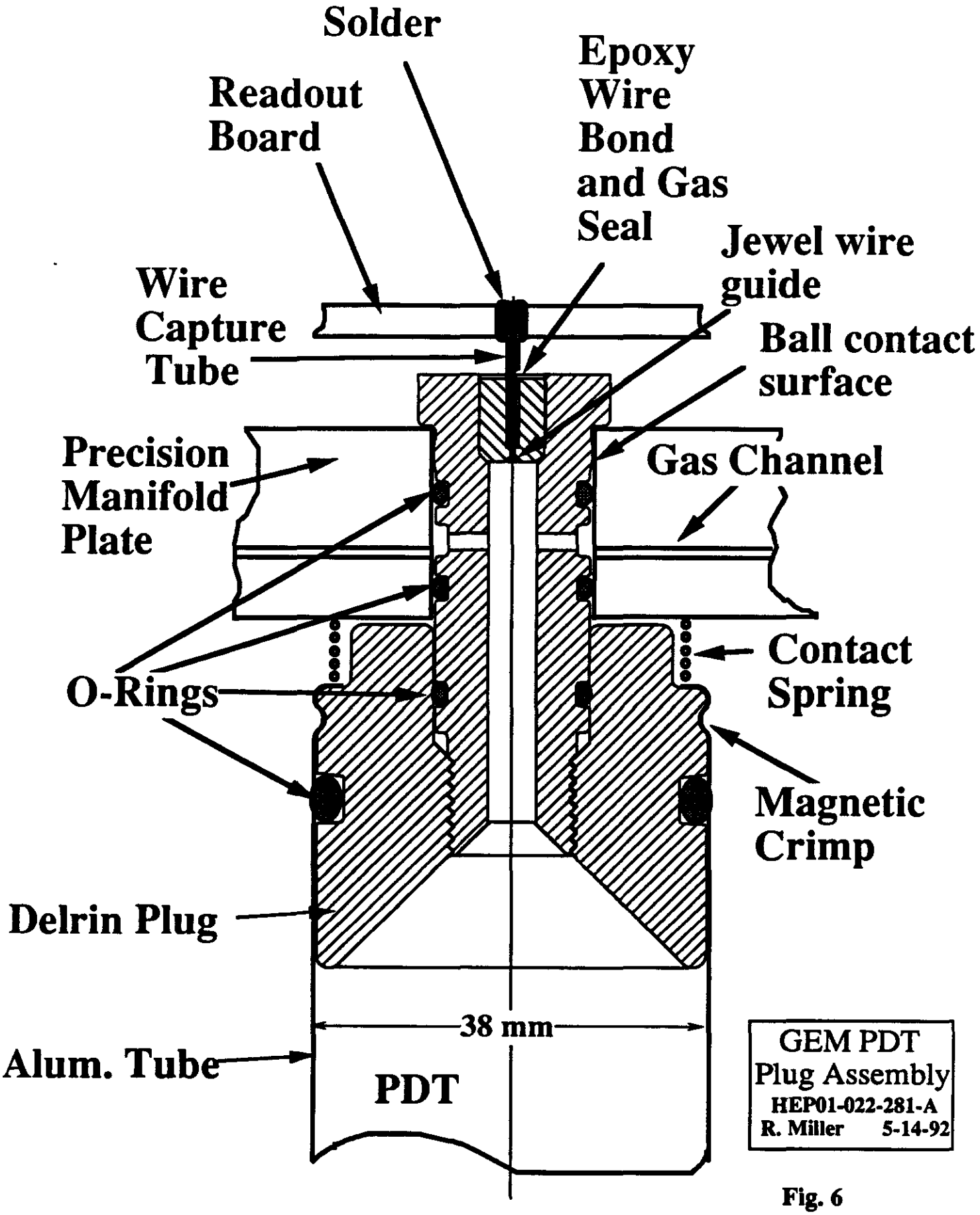
Solder
Readout Board
Epoxy Wire Bond and Gas Seal
Jewel wire guide
Wire Capture Tube
Ball contact surface
Precision Manifold Plate
Gas Channel
Contact Spring
O-Rings
Magnetic Crimp
Delrin Plug
38 mm
Alum. Tube
PDT
GEM PDT
Plug Assembly
HEP01-022-281-A
R. Miller 5-14-92

Fig. 6

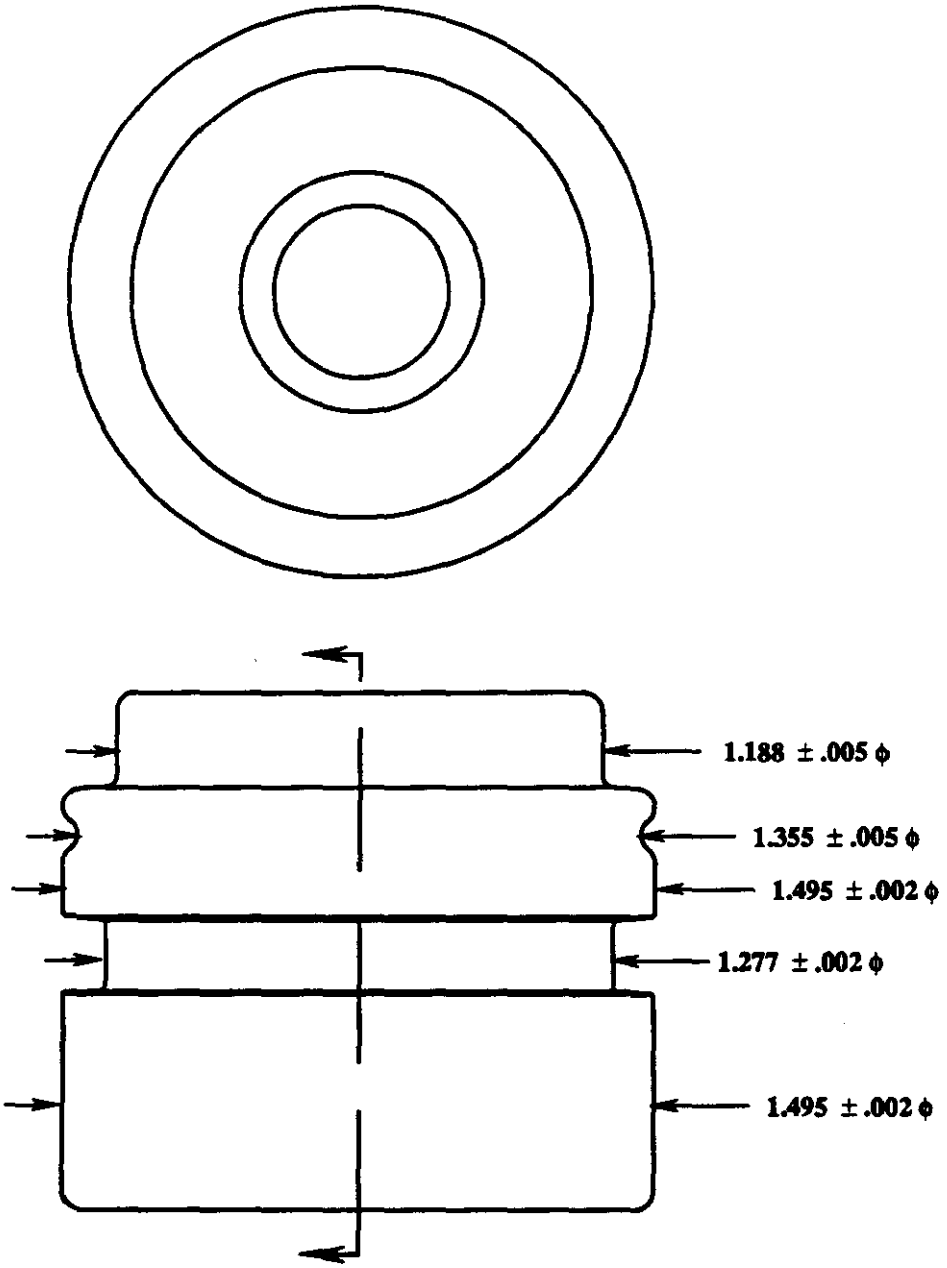

ITEM	PART NO.	DESCRIPTION	QTY.
PARTS LIST			
UNLESS SPECIFIED DECIMALS ±.005 FRACTNS ± ANGLES ±1.0° BREAK ALL EDGES DO NOT SCALE DWG		ORIG. R. Miller	4-2-92
		DRAWN	
		PROJECT Gem Muon PDT	
		MATERIAL Delrin 570	
MICHIGAN STATE UNIVERSITY HIGH ENERGY PHYSICS			
TITLE Tube Plug			
DWG. NO. HEP01-022-275		REV. A	SCALE 2:1

Fig. 7

4-22

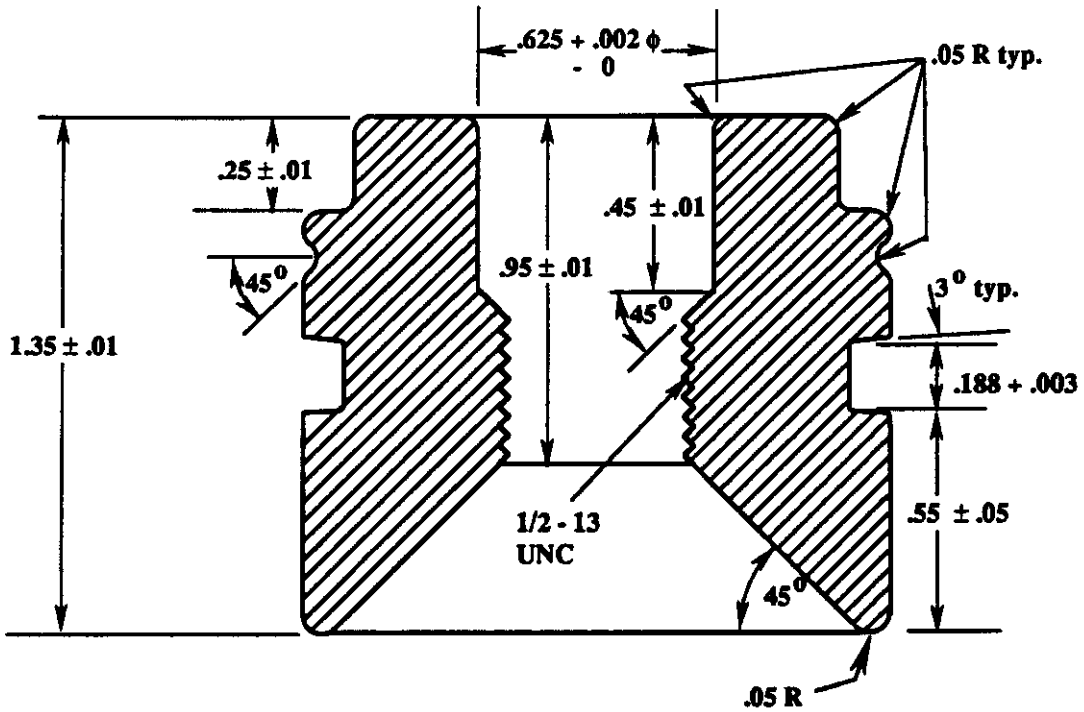

ITEM	PART NO.	DESCRIPTION	QTY.
PARTS LIST			

UNLESS SPECIFIED DECIMALS .005 FRACTNS ± ANGLES ±1.0° BREAK ALL EDGES DO NOT SCALE DWG	ORIG. R. Miller	4-2-92
	DRAWN	
	PROJECT Gem Muon PDT	
	MATERIAL Delrin 570	

MICHIGAN STATE UNIVERSITY
HIGH ENERGY PHYSICS

TITLE Tube Plug - Section

DWG. NO.	REV.	SCALE
HEP01-022-275-S	A	2:1

Fig. 8

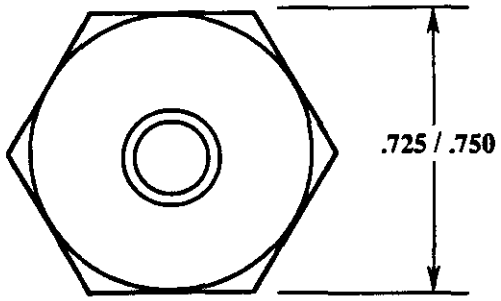

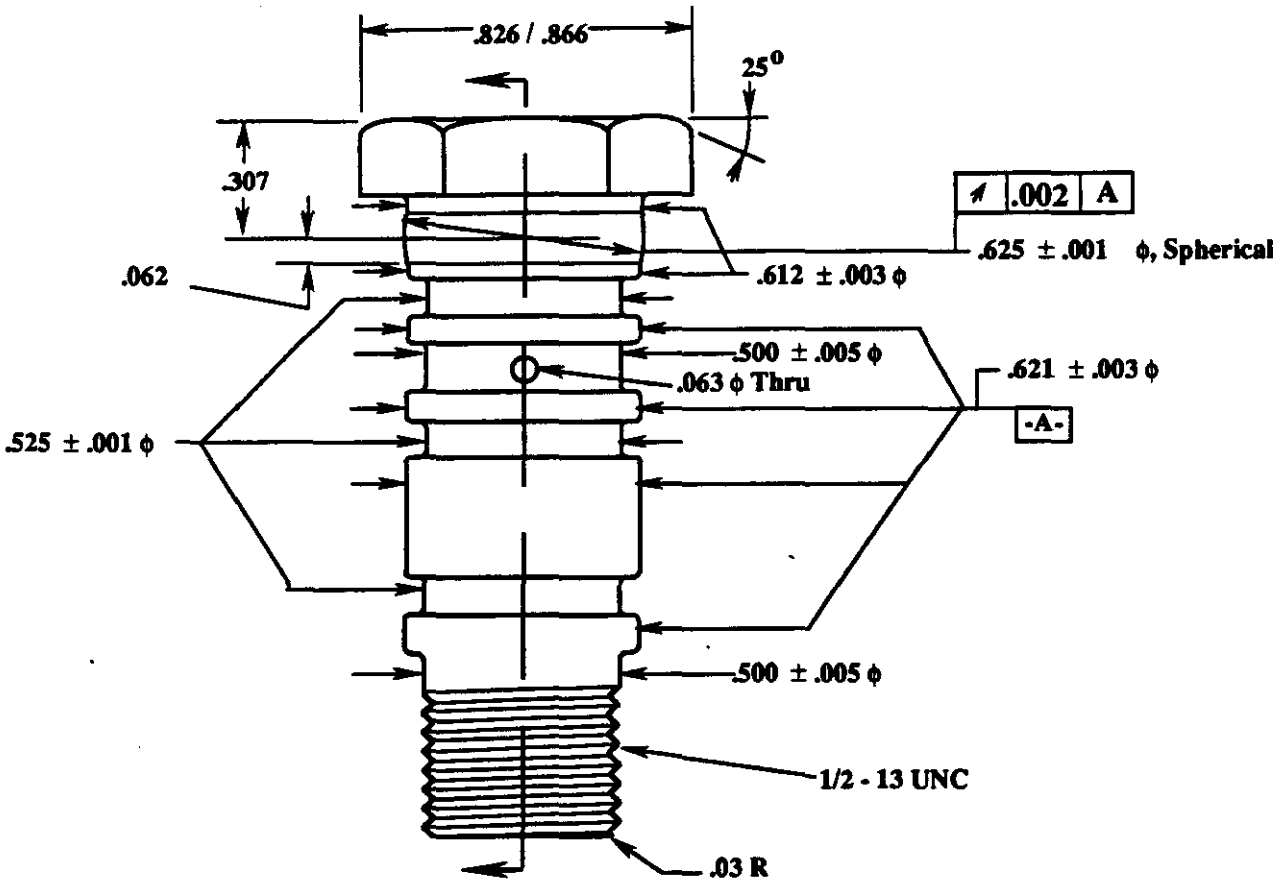

ITEM	PART NO.	DESCRIPTION	QTY.
PARTS LIST			

UNLESS SPECIFIED DECIMALS ±.005 FRACTNS ± ANGLES ±1.0° BREAK ALL EDGES DO NOT SCALE DWG	ORIG. R. Miller	4-2-92
	DRAWN	
	PROJECT Gem Muon PDT	
	MATERIAL Delrin 570	

MICHIGAN STATE UNIVERSITY
HIGH ENERGY PHYSICS

TITLE Plug Insert

DWG. NO.	REV.	SCALE
HEP01-022-276	A	2:1

Fig. 9

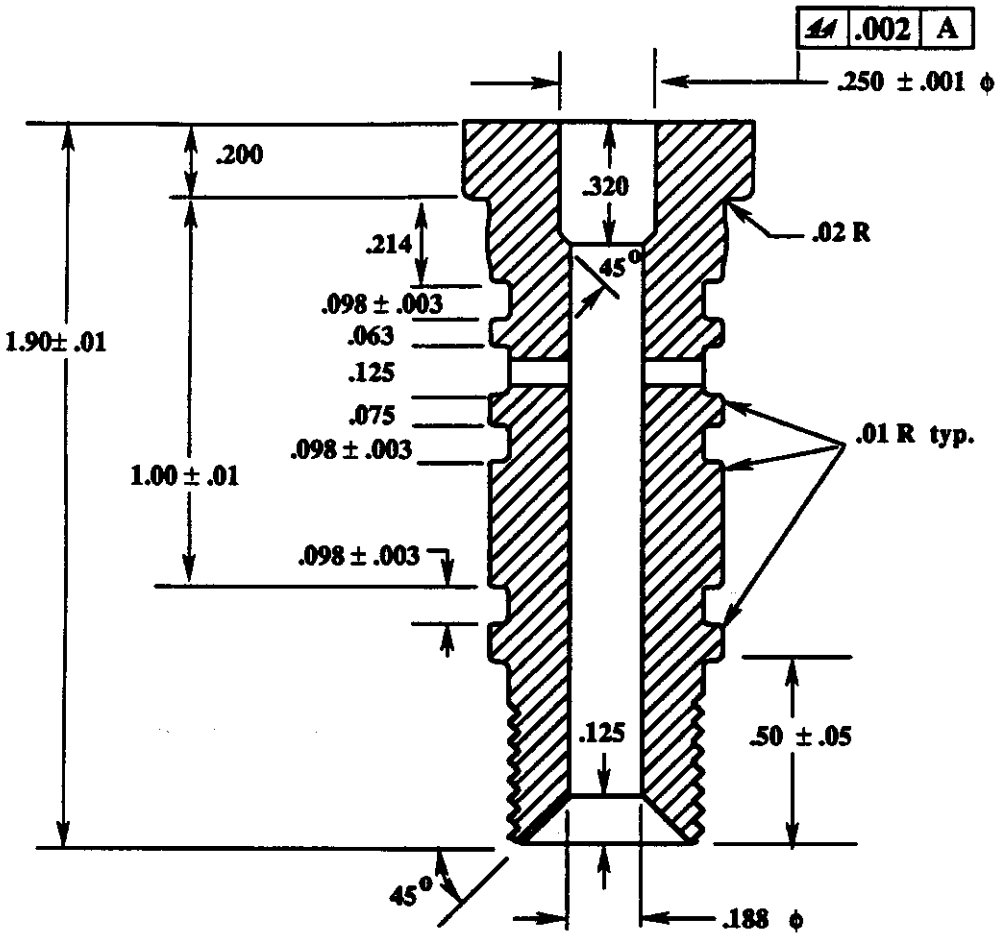

ITEM	PART NO.	DESCRIPTION	QTY.
		PARTS LIST	

UNLESS SPECIFIED DECIMALS .005 FRACTNS ± ANGLES ±1.0° BREAK ALL EDGES DO NOT SCALE DWG	ORIG. R. Miller	4-2-92
	DRAWN	
	PROJECT Gem Muon PDT	
	MATERIAL Delrin 570	
MICHIGAN STATE UNIVERSITY HIGH ENERGY PHYSICS		
TITLE Plug Insert - Section		
DWG. NO. HEP01-022-276-S	REV. A	SCALE 2:1

Fig. 10

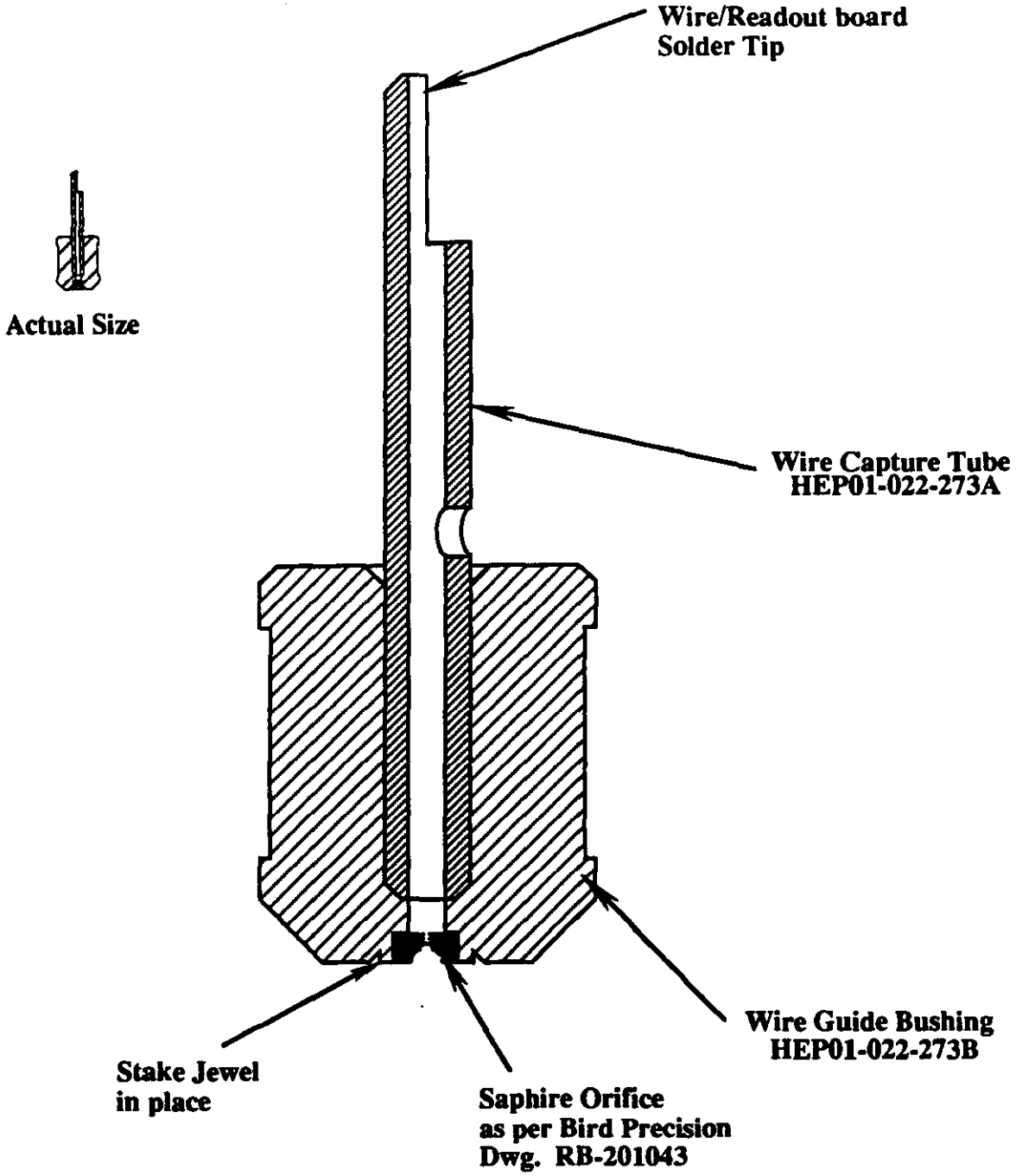

ITEM	PART NO.	DESCRIPTION	QTY.
PARTS LIST			

UNLESS SPECIFIED DECIMALS ±.005 FRACTNS ± ANGLES ±1.0° BREAK ALL EDGES DO NOT SCALE DWG	ORIG. R. Miller	3-16-92
	DRAWN	
	PROJECT Gem Muon PDT	
	MATERIAL	
MICHIGAN STATE UNIVERSITY HIGH ENERGY PHYSICS		
TITLE Sense Wire Guide Assembly		
DWG. NO. HEP01-022-273C	REV. B	SCALE 8:1

Fig. 11

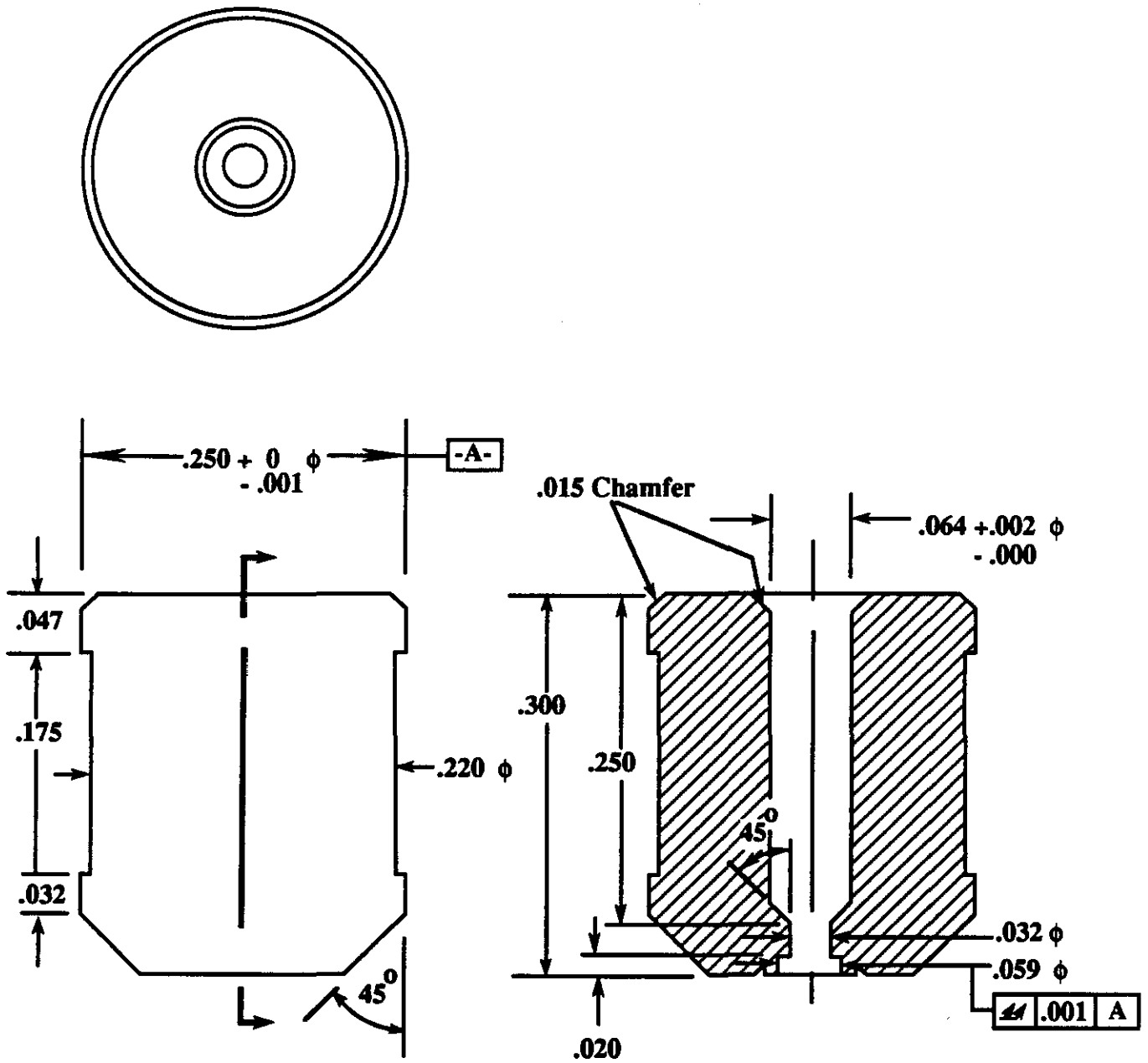

ITEM	PART NO.	DESCRIPTION	QTY.
PARTS LIST			

UNLESS SPECIFIED DECIMALS ±.005 FRACTNS ± ANGLES ±1.0° BREAK ALL EDGES DO NOT SCALE DWG	ORIG. R. Miller	3-16-92
	DRAWN	
	PROJECT Gem Muon PDT	
	MATERIAL Brass	
MICHIGAN STATE UNIVERSITY HIGH ENERGY PHYSICS		
TITLE Sense Wire Guide Bushing		
DWG. NO. HEP01-022-273B	REV. B	SCALE 8:1

Fig. 12

RB-201043 | REV:

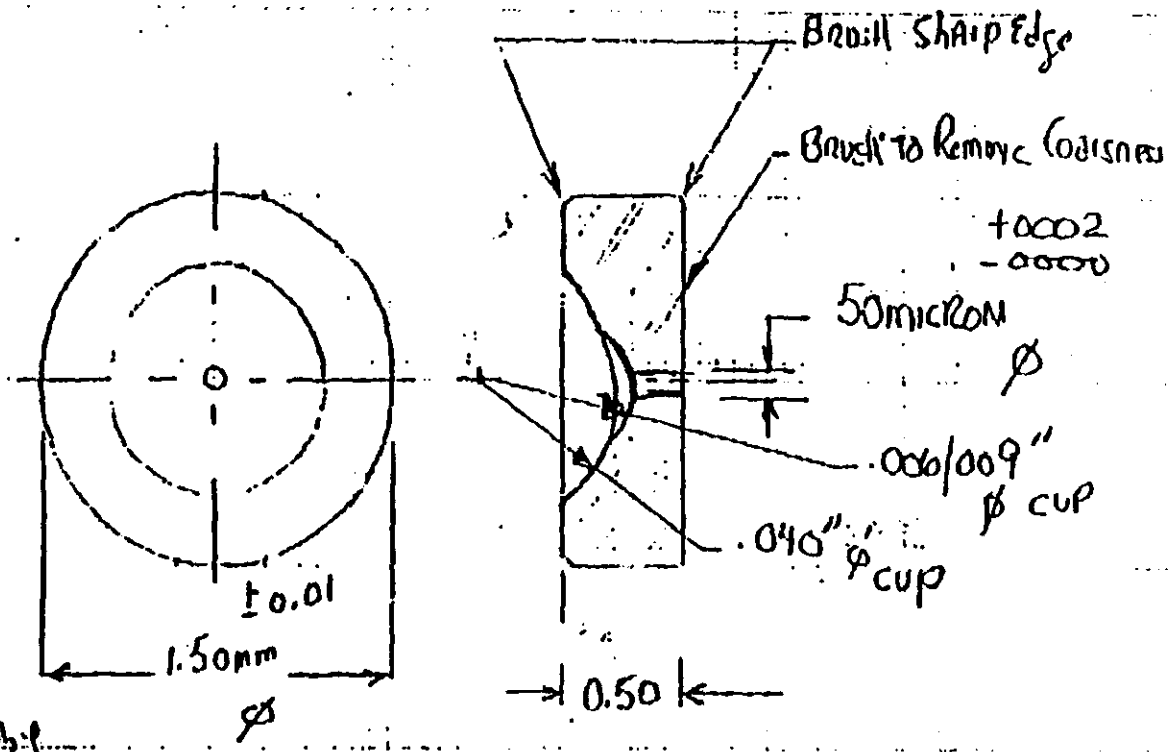

Holes:
Sapphire or Ruby
No Polish Required, Brush Face to Remove Coarsness
Id Smooth Only
Concentricity Id to O.D. within 10 MICRONS

REVISIONS		
LTR	CHANGE	DATE

NOTATIONS UNLESS SPECIFIED

TOLERANCES:
FRACTIONS
.X
.XX
.XXX
ANGLES

CONCENTRICITY OF ID TO OD ____ TIR
____ BURR FREE 10 MAG.

DWNG	Ruby or Sapphire
DATE 2/14/92	FINISH Clear Smooth
CK'D	
DATE / /	TITLE Orifice

BIRD PRECISION
One Spruce Street, P.O. Box 840
Waltham, MA 02254
Telephone (617) 894-0180
Fax (617) 894-6308

RB-201043 | REV:

FROM BIRD PRECISION 03/03/92 09:12 P. 2 TOTAL P. 2

A-28

Fig 13

Fig 13

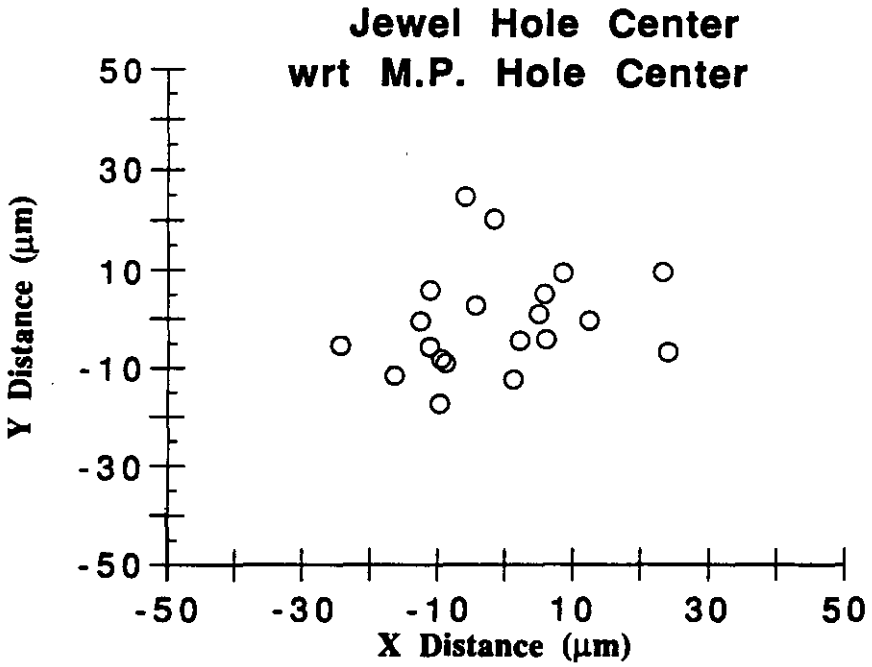
Jewel Hole Center
wrt M.P. Hole Center
Y Distance (μm)
50
30
10
-10
-30
-50
-50
-30
-10
10
30
50
X Distance (μm)

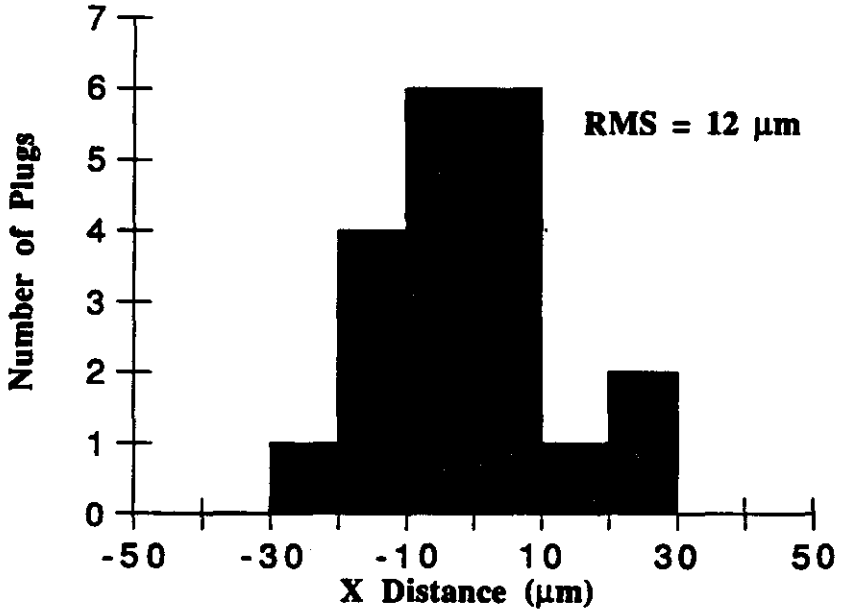
Number of Plugs
7
6
5
4
3
2
1
0
RMS = 12 μm
-50
-30
-10
10
30
50
X Distance (μm)

Fig. 14

Option For Wire Location Pin

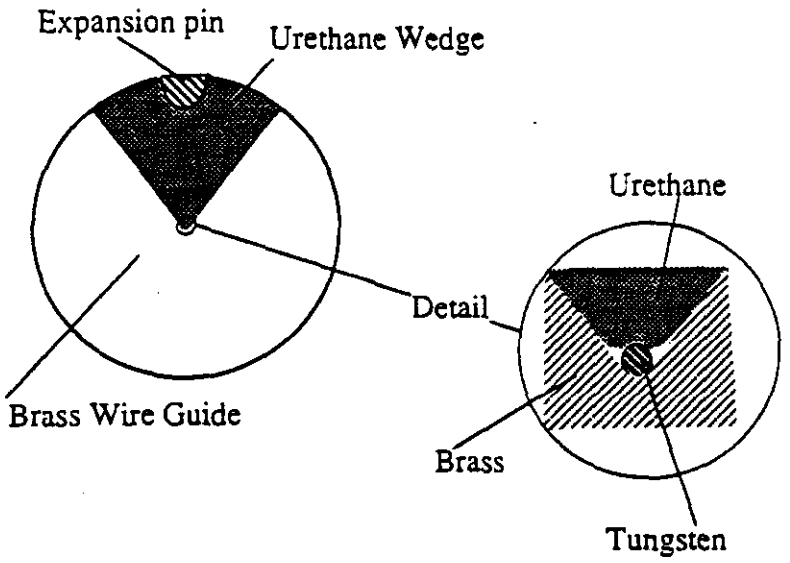

Option For Wire Locating Comb

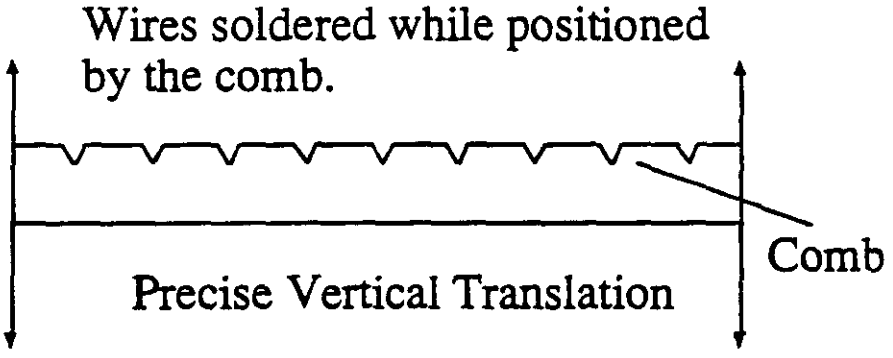

Fig. 15