GEM TN-92-204

Texas Test Rig Safety Evaluation Supporting Documents

Chad Price & Richard Guthrie
SSC Laboratory

October 1, 1992

Abstract:

This document supplements the safety evaluation for the Texas Test Rig (TTR) Laboratory. It's primary function is to give additional information on the mitigation of identified hazards and contribute additional insight into the overall safety of the TTR and its operation. It is provided as supporting documentation to GEM TN-92-151, Texas Test Rig Laboratory Safety Evaluation.

Texas Test Rig Safety Evaluation Supporting Documents

TABLE OF CONTENTS

Page(s)	Item/Contents
1	Introduction
2	Coulson Memo 8/6/92- Fire Prot. AHJ
3	Cone DOE Letter 2/12/92- Fire Prot. AHJ
4	Guthrie Memo 8/5/92- TTR AHJ
5-6	Hecht Memo 8/10/92- Air Conditioning
7	Brown DOE Letter 8/20/92- SE Review
8-10	Keen Memo 7/31/92- ODH analysis review
11-13	LTS Documents 6/26-6/29/92- Press. Tests
14	Mitselmakher Memo 7/17/92- Laser Tests
15	SSC Med. 8/25/92- Bonushkin Med. Report
16	QMail Memos 8/21-8/24/92- Lockout/Tagout
17	Sanders Memo 7/23/92- Magnet Fringe Field
18	Stocker/Guthrie Memo 9/17/92- Fringe Field
19	Sanders QMail 7/28/92- Fringe Field
20	Stocker/Guthrie 7/27/92- Fringe Field
21	Diagram- TTR gas pad, parking
22-25	Verminski Memo 7/31/92- PRD Safety Req's
26	Milner Memo 7/20/92- TTR gas flow
27	Guthrie/Murphy 8/7/92- ENMET Test/Calib.
28	Truitt Memo 9/22/92- TTR Iarocci Chambers
29-30	NFPA 49- Hazardous Chemicals Data
31-32	Fac. Serv. Req. 8/25/92- TTR AC wiring
33	Fac. Serv. Req. 8/25/92- Gas Leak Det. & EPO
34	Fac. Serv. Req. 8/21/92- Bonding & Signs
35-38	ENMET Manual excerpt- Installation
39	Schematic- TTR Gas System
40-41	Laser Information
42	Training Status 8/14/92
43	Training Status 9/25/92
44	TTR Technologies- Delivery Schedule
45	Training Status 9/11/92
46	Fac. Serv. Req. 10/1/92- TTR Bonding
47	Fac. Serv. Req. 10/1/92- TTR Exits
48	Fac. Serv. Req. 10/1/92- TTR Parking Spaces
49	TTR Sound Level Survey Request

Texas Test Rig Safety Evaluation Supporting Documents

TABLE OF CONTENTS (Cont.)

Page(s)	Item/Contents
50-56	Zimmer-Nixdorf- TTR Structural Analysis
57-96	Tulk 6/2/92- TTR Structural Analyses
97	Guthrie Memo 10/1/92- Gas Chamber Struct. Analysis
98-106	TTR Hazard Tracking System- 10/1/92
107-132	TTR Action Items
133-134	Fac. Serv. Req. 10/1/92- TTR Smoke Detectors/Extinguish.
135	Purchase Order for 2nd Houston gas detector
136	TTR Readiness Review Comments - Dorn 9/22/92
137	TTR Readiness Review Comments - Gunnels 9/23/92
138-145	TTR Hazard Resolution- Specific Task/Individ 10/2/92
146	TTR Hazard Tracking - Guthrie 10/2/92

Texas Test Rig Laboratory Safety Evaluation Supporting Documents

Introduction:

This document supplements the safety evaluation for the Texas Test Rig (TTR) Laboratory. It's primary function is to give additional information on the mitigation of identified hazards and contribute additional insight into the overall safety of the TTR and its operation. It is provided as supporting documentation to GEM-TN-92-151, Texas Test Rig Laboratory Safety Evaluation.

Superconducting Super Collider Laboratory
2550 Beckleymeade Avenue, MS 1071
Dallas, TX 75237-3997

Environment, Safety, and Health Oversight Office

To: Distribution

92 5438 E D

From: Larry Coulson for LC

Date: August 6, 1992

Subject: Fire Protection Authority Having Jurisdiction

DOE Order 5480.7, Fire Protection, states that the delegation of the Authority Having Jurisdiction (AHJ) is the applicable Departmental Element. The enclosed letter from the SSC Project Office defines the Fire Protection Authority Having Jurisdiction for the SSC Project as Nat Brown, Director of Project Compliance Division.

As defined by the National Fire Protection Association, the "authority having jurisdiction" is the organization, office or individual responsible for "approving" equipment, an installation or a procedure. "Approved" is defined as acceptable to the AHJ. Nat or his designee can "approve" equipment, installation or procedures related to those fire protection standards specifying alternative means of compliance subject to the AHJ. Laboratory personnel or its subcontractors cannot "approve" equipment, installation or procedure related to the SSC Project fire protection criteria. We can, however, accept, concur, review for compliance, review for signature, witness acceptance tests, etc. for equipment, installation or procedures related to the SSC Project fire protection criteria.

Draft and interim Laboratory policy and procedures that have been developed for review of design documents, operational readiness reviews, safety committees, etc. are being reviewed to clearly identify the role of the Laboratory and DOE.

Enclosure
Terrell Cone's 2/12/92 "FP Authority Having Jurisdiction" letter

Distribution:
Tom Bush
Dick Briggs
Steve Brumley
Gerry Dugan
Fred Gilman
Jon Ives
Raphael Kasper
Ted Kozman
John Rees
George Robertson
Roy Schwitters
Ed Siskin
Jack Story
Phil Shelley
Robert Van Ness

c:
Linda Argo
Bill Dorn
Debra Fontenot
Frank Greer
Clayton Hamm
David Hawkins
Barry Hendrix
David Linville
Roy Little
Carol Matteson
Tom Murphy
Ray Nations
Dick Olejnicak
Ben Rietze
Greg Sucec
Steve Stokes
Ed Verminski

xc: B. Lavelle
R. Murphy
R. Woolley
R. Guthrie
G. Sanders

92 5438 E D 0011/DF/lgr

Department of Energy
SSC Project Office
2550 Beckleymeade, Mail Stop 1020
Dallas, Texas 75237-3946

FEB 12 1992

FEB 1992
RECEIVED

Mr. Barry Cogburn, Manager
Contracts and Risk Management
SSC Laboratory, Mail Stop 1091
2550 Beckleymeade Avenue
Dallas, Texas 75237-3946

Subject: Fire Protection Authority Having Jurisdiction

Dear Mr. Cogburn:

This responds to your request for designation of the Fire Protection Authority Having Jurisdiction (AHJ) for the Superconducting Super Collider Project.

This action is within the Contracting Officer Representative (COR) responsibilities of Nat Brown, Director, Project Compliance Division. Accordingly, Mr. Brown is the AHJ for fire protection.

Sincerely,

Terrell C. Cone

Terrell C. Cone
Director, Contract
Administration Division
Contracting Officer

c:
Roy Schwitters, Mail Stop 1070
Nat Brown, PD5

Superconducting Super Collider Laboratory
2550 Beckleymeade Avenue, Mail Stop 2005
Dallas TX 75237-3946
(214) 708-6306
Fax: (214) 708-6088

Physics Research Division

Memorandum

To: Gary Sanders
From: Richard Guthrie
Subject: Authority Having Jurisdiction (AHJ) for the TTR
Date: August 5, 1992 4:00 PM

Ed Verminski has just informed me that the AHJ for the TTR is DOE and not Fred Gilman.

This poses many problems with getting the TTR operational. It will effectively delay any operation of the TTR by "several" weeks as we would be required to coordinated and get concurrence on everything.

We need to meet and discuss this issue. I would also like Ronn Woolley and Tom Murphy be present at this meeting. It is very important that the AHJ for the TTR remain with Fred Gilman.

Thank you.

Superconducting Super Collider Laboratory
Physics Research Division
2550 Beckleymeade Avenue, Suite 125
Dallas, TX 75237-3946
(214) 708-6039
Fax: (214) 708-5111

Memorandum:

To: Jim Siegrist

From: Marvin Hecht

Date: August 10, 1992

Re: **Meeting Re: The installation of supplemental air conditioning for the "Texas Test Rig".**
Date of Meeting: **August 7, 1992**

Attendees: Tom Murphy (ES&H), Ewald Zimmer-Nixdorf(EFD), Jerry Hanner (FES), Richard Guthrie(ES&H), Henry Santos(EFD), Marvin Hecht(EFD).

This is a supplement to the FSR dated May 27, 1992, cost account No. XPHA-9LT.(copy attached)

After some discussion, it was decided to locate the air cooled condensers on the roof of Building 4, above the TTR in lieu of placing them on the pad in front of the gas supply location.

This was done because there was objection to using the pad which is sometimes used as a loading dock for the gas materials and safety concerns required modification of the fencing. No other satisfactory surface location could be agreed upon.

Jerry Hanner has verified with his structural engineer that these units can safely be installed on the roof if located properly. This new location will be documented and brought to Trammel Crow for approval. The work now required is listed below:

1. Install three (3) 10-ton air cooled condensing units on the roof.

2. Install three (3) 10-ton air handling units inside the TTR Room, as high as possible.

3. Complete installation of refrigeration piping and refrigerant charge.

4. Complete installation of temperature and safety controls, electrical power and control wiring.

5. Complete testing and balancing of all three (3) systems.

The installation shall be based on the following conditions:

1. The condensing units, air handling units, low ambient control devices, electrical panels, circuit breakers, and thermostats will be supplied by Experimental Facilities Department of PRD. These units have been previously purchased and are now located in storage at the Parkerville Warehouse. Notify Henry Santos for the necessary paperwork to expedite delivery. (Ext. 6158).

2. Note that the systems each have 2-stage temperature control, with two (2) separate refrigerant circuits.

3. Calculations for the structural integrity of the roof with the condensing units supported on it and the air handling units hanging from the ceiling will be made by the Facilities Engineering Services Department and approved by authorized personnel at Trammel Crow.

4. The installation of the units will have the approval of the SSCL Safety Engineer.

5. The installation will be closely coordinated with the Physics personnel in the TTR room as far as the procedures and scheduling. This is to give primary considerations to the gas systems being used inside the area, the sensitivity of the chambers that are being assembled, and the tight operating schedule of the Physics experiments in progress.

The total estimated cost shall not exceed the sum of twenty five thousand dollars $25,000.00

Approved:

_____

Jim Siegrist

Department of Energy
SSC Project Office
2550 Beckleymeade, Mail Stop 1020
Dallas, Texas 75237-3946

AUG 20 1992

Mr. Ron Wooley
Physics Research Division
Superconducting Super Collider Laboratory
2550 Beckleymeade Road, Mail Stop 2005
Dallas, Texas 75237

Subject: Texas Test Rig (TTR) Safety Evaluation Review

Dear Mr. Wolley:

Thanks for allowing us to review the Texas Test Rig Safety Evaluation. The document is an excellent product. We do however have a few comments:

Paragraph 2.4.3

Is the laser pressure box American Society of Mechanical Engineers (ASME) code certified? If not is adequate testing data available to confirm that the intent of the ASME code for pressure vessels have been met?

Paragraph 4.7

Addressed procedures must be in place prior to starting operations.

Paragraph 5.1

Protective equipment required for each operation must be identified and available to employees prior to starting operations.

Paragraph A.2.1, Hazards Data Worksheets

A total of 66 potential hazards have been identified. Recommended corrective action appears adequate to mitigate the identified hazards. However, the status of mitigative action for each hazard must be confirmed and documented prior to operations.

If you have any questions please contact George Whitlock of my staff at extension 2571.

Sincerely,

Tony Rebelado

FOR Nat Brown
Director, SSCPO
Compliance Branch

c: R. Schwitters

Superconducting Super Collider Laboratory
Environment, Safety, and Health Department
2550 Beckleymeade Avenue, MS 1017
Dallas, Texas 75237-3946
(214) 708-1060 • Fax (214) 708-1930

Industrial Hygiene Group

MEMORANDUM

Date: 31 July 1992

To: Distribution

From: Mary Keen

Subject: Review of ODH analysis for the Texas Test Rig (TTR), Stoneridge Building 4

The statements below are basic premises used in evaluating the ODH analysis.

* Use of SSCL Oxygen Deficiency Hazards interim policy takes precedence over Fermilab policy, unless there is no guidance in the SSCL policy.

* Warning devices and controls shall be operating properly before introduction of materials which could introduce an ODH condition.

* Changes to current plans, equipment placement of not already installed portions, and systems that are not yet functional will have to be reevaluated for impacts on the ODH classification, if not considered in the current analysis. Those items which have been considered in the current analysis are expected to be installed and to operate as specified in project documentation.

<u>Assumptions made in the analysis and comments regarding acceptability</u>

* Constant building pressure, volume, ventilation and leak rates are assumed. For practical purposes, the small variations in these factors are unlikely to significantly affect the oxygen concentration enough to increase the hazard.

* 21% oxygen is assumed for fresh air. Although fluctuations are possible, this assumption is essentially reasonable and widely accepted.

* It is assumed that only one event (failure) occurs at any time. Common failure modes were considered and believed not to be present. In other words, failure of two components would be random and affected by the probability of each component failing independently.

* Rapid mixing is assumed. For a large release, this assumption appears to be valid. While this may not be the case for slow leaks which are not readily visible, the supplied ventilation is expected to overcome such a condition.

* The fatality factor (1 X 10 exp-7 fatalities/hour) is based on National Industrial Averages. There is some question as to accepting this value. SSCL should meet a more rigorous goal than National Industrial Averages, and morbidity (brain damage) is a more acceptable measure of harm than fatality.

However, the fatality rate is easy to measure and has been measured, while the morbidity rate is not easy to measure and has not been established.

In the absence of a better measure, and in accordance with the SSCL ODH interim policy, I believe use of the fatality concept is the best available comparison for use in determining degree of hazard.

* Use of Fermilab history, Nuclear Regulatory Commission tables, SSC experience, and manufacturer's data is appropriate in estimating component failure rates of comparable equipment. These estimated failure rates are believed to be conservative, i.e., failure is expected less frequently than the estimated rate.

* Estimated leak rates are based on maximum flow rates. This approach is conservative and reasonable. It provides for the 'worst case' scenario.

* The use of 18% oxygen as a first effect level, is documented in the 1990-1991 Threshold Limit Values for Chemical Substances and Physical Agents and Biological Exposure Indices of the American Conference of Governmental Industrial Hygienists. The reference states "(The minimal oxygen content should be 18% by volume under normal atmospheric pressure (equivalent to a partial pressure, pO2 of 135 torr)."

Issues considered, not addressed in the analysis

* The heating, ventilating and air conditioning (HVAC) system, located on the roof, is arranged so that the supply (fresh) air intakes and the exhaust (from the building) are located to reduce the potential for exhausted air being drawn back into the buildings. This arrangement would also help to prevent compounding the effect of an oxygen deficiency hazard should a release occur inside the building.

Issues remaining to be resolved

* I recommend that signs posted to inform occupants of potential hazards, address the specific hazard. In my opinion, the words ODH Class 0 should not be used in the facility. "Hazardous gasses present. Exit building immediately when alarm sounds." would be a better representation of the hazard and also reduce the confusion about the use of the word zero.

Requirements

* It is critical that the ventilation system operate at the minimum specified rate when materials that could result in an oxygen deficiency hazard are present in the building or could be introduced into the building. If the ventilation system fails, an alarm must sound, requiring evacuation of the building. Maintenance, including replacement of parts, of the ventilation system is also critical and must be performed at intervals recommended by the manufacturer, but in no case at a frequency of less than quarterly.

* Routine maintenance, including replacement, as recommended by the manufacturer is required for all components discussed in the analysis of ODH for the Texas Test Rig.

* Employees are required to be instructed to immediately exit the building when an alarm sounds.

* Make the Safety Evaluation, including Appendix C, a controlled document.

Recommendations

* The meaning of ODH Class 0 has not been well defined, either in the Fermilab policy or in the SSCL interim policy. In fact, the use of the term zero implies to many that there is zero hazard. The report recommendations make an attempt to dispel this conclusion, however, in the interest of improving communication, I recommend that signs posted to inform occupants of potential hazards, address the specific hazard. In my opinion, the words ODH Class 0 should not be used in the facility. "Hazardous gasses present. Exit building immediately when alarm sounds." would be a better representation of the hazard and also reduce the confusion about the use of the word zero.

Conclusions

* The relatively small volumes of gasses used in the TTR project and the relatively large volume of the room where the project is housed, tend to make this analysis basic rather than complex. In most instances, the oxygen concentration is not expected to fall below 19.5%. For those instances where the oxygen concentration could fall below 19.5%, the analysis clearly shows that mitigation of the hazard is provided.

* Based on the information supplied in Appendix C, Oxygen Deficiency Analysis included in the TTR Safety Evaluation, authored by R. Guthrie, and other sources, I concur with the arguments regarding its classification for oxygen deficiency hazards.

DISTRIBUTION:

S. Baker
L. Coulson
R. Guthrie
P. Shelley
E. Verminski

Superconducting Super Collider

Laboratory

2550 Beckleymeade avenue
suite 606A.MS3006
Dallas, Tx 75237-3946
(214) 708-6335 FAX (214)708-1710

LTS / SHOPS
VACUUM GROUP

VACUUM LEAK TEST

PART NUMBER: _____ **SERIAL NUMBER:** KOLC 102

PART DISCRIPTION: GAS MIXING CHAMBER

LEAK TEST RATE: $<5 \times 10^{-10}$ atm/cm³/sec **PASS:** ✓ **FAIL:** ____

EQUIPMENT USED: ALCATEL **MODEL:** ASM 110

STANDARD USED FOR CALIBRATION: 1×10^{-7} STANDARD TYPE F824

CALIBRATION VERIFIED BEFORE TEST: ✓ **AFTER TEST:** ✓

TESTED BY: [illegible] **DATE:** 6/26/92

CERTIFICATION # : 4872 A

PRESSURE TESTED TO 11 BAR. O.K.

Superconducting Super Collider

Laboratory

2550 Beckleymeade avenue
suite 606A,MS3006
Dallas, Tx 75237-3946
(214) 708-6335 FAX (214)708-1710

LTS / SHOPS
VACUUM GROUP

VACUUM LEAK TEST

PART NUMBER: _____ **SERIAL NUMBER:** KOLC 103

PART DISCRIPTION: EAS MIXING CHAMBER

LEAK TEST RATE: < 5x10⁻¹⁰ atm/cm³ **PASS:** ✓ **FAIL:** ____

EQUIPMENT USED: Plantec **MODEL:** ASM 110

STANDARD USED FOR CALIBRATION: 1x10⁻⁷ Torr Type FE 24

CALIBRATION VERIFIED BEFORE TEST: ✓ **AFTER TEST:** ✓

TESTED BY: [signature] **DATE:** 8/26/92

CERTIFICATION #: 2592 M

UNIT POSSITIVE PRESSURE CHECKED TO 11 BAR. O.K.

[signature]

Superconducting Super Collider

Laboratory

2550 Beckleymeade avenue
suite 606A,MS3006
Dallas, Tx 75237-3946
(214) 708-6335 FAX (214)708-1710

LTS / SHOPS
VACUUM GROUP

VACUUM LEAK TEST

PART NUMBER: _____ **SERIAL NUMBER:** KOLC 101

PART DISCRIPTION: EXPLOSION CHAMBER

LEAK TEST RATE: $<5 \times 10^{-10}$ ATM/cm³/sec **PASS:** ✓ **FAIL:** _____

EQUIPMENT USED: DETECTOR **MODEL:** ASM 101

STANDARD USED FOR CALIBRATION: 1×10^{-7} TYPE FE 24

CALIBRATION VERIFIED BEFORE TEST: ✓ **AFTER TEST:** ✓

TESTED BY: [signature] **DATE:** 6/29/92

CERTIFICATION #: 4592A

UNIT WAS POSSITIVE PRESSURE CHECKED TO 150 PSI
NO LEAK.

[signature]

Memorandum

To: Richard Guthrie
From: Gena Mitselmakher

Subject: Laser Tests

This is to inform you that Yuri Bonushkin was working in my department at the Joint Institute for Nuclear Research, Dubna, that he passed training and is familiar with the laser operation procedures and the corresponding safety precautions.

G. Mitselmakher

7/17/92

Richard.
This is the memo, certifying my laser experience.

Regards, Yuri.

— YURI NOW HAS SSCL LASER TRAINING COURSE

SSC Laboratory
Medical Office

MEDICAL STATUS REPORT

Type of Examination
☐ Preplacement ☐ Periodic ☐ Transfer ☒ Special Laser ☐ Re-employment

Name of Employee (Last, First, M.I.) - Please Print	Social Security No.	Date of Birth
Bomushkin Yuri Ye	636 178 6053	6/7/65

Job Title	Company	Division	Department
Physicist	URA	PRD	TTR

Telephone Ext.	Mail Stop	Supervisor's Name
3078	2005	Fred Gilmore

I. RETURN TO WORK DISPOSITION

☐ If occupational illness or injury, date of initial incident _____ .

☐ May return to work full time on _____ without restriction.

☐ May return to work on _____ with the following restrictions: _____

II. RE-EVALUATION

Employee is NOT released to return to work if re-evaluation appointment is cancelled. Failure to keep re-evaluation appointment may lead to disciplinary action.

☐ May not return to work until re-evaluation by Physician in the SSC Medical Office on _____ between 10:00 – 11:30 a.m.

☐ Is scheduled for re-evaluation in the SSC Medical Office on _____ between 10:00 – 11:30 a.m.

☐ Is being referred to a specialist for further evaluation/care.

☐ Has been prescribed medication(s) which (may / may not) be taken at work.

III. EMPLOYMENT DISPOSITION

☒ Acceptable for position without restrictions.
☐ Referred to Accommodation Committee.
☐ Not acceptable for position.
☐ Acceptable for position with restrictions listed below.
☐ Decision deferred, awaiting additional information.

Restrictions (if any): OK for work with class IIIB + IV lasers. Clearance expires 8/31/93.

Physician's Signature Thomas J. Chester MD Date 8/25/92

SSCL F 0173
6/92 (6)

COPIES:
If RTW or RE-EV., add:
If OCCUPATIONAL add:
Medical Record (orig)
Benefits
Division Safety Lead
Payroll
Employee
Supervisor
Weight Office

From: Ronn Woolley (8/24/92)
To: Richard Guthrie, Tom Murphy
CC: Warren Kampmeier, Ewald Zimmer-Nixdorf
Reply to: RE>>>FWD>TTR Safety Require. CheckList
Bill appears to know something that we don't. Will TTR personnel be performing any work or testing on energized electrical sources, in situations where what he describes can occur? Or will Facilities Engineering be doing all the tasks requiring lockout / tagout? I'm not intruding, just curious!

Date: 8/21/92
To: Ronn Woolley
From: Bill Dorn
I agree that Facilities will address some Lockout/Tagout(LOTO) as pertains to some electrical functions, however, LOTO also applies to servicing and maintenance of machines and equipment in which the unexpected energization or start up of the TTR could cause injury to those operating or working on it. These could be and are likely to be physics personnel working on the TTR. The lockout procedures should be able to be easily included as part of the start up or operating procedures.

I think your thoughts on how to secure compressed gas bottles are appropriate.

Bill

Date: 8/21/92 4:07 PM
To: Bill Dorn
From: Ronn Woolley
Richard is essentially correct, in that all High Voltage (≥ 12VAC or 50 VDC RMS) work will be performed by Facilities Engineering Group, who'll do the lock-out/ tagout. Any other TTR-specific testing or calibration on exposed High Voltage sources, can be accomplished, if need be, by lockout/ tagout at the sources main power plug or at it's circuit breaker panel. It is my understanding that even these tasks will require use of Facilities' Electrical Engineer, who'll lockout / tagout.

I do not believe that under these operational circumstances that the TTR doesn't require it's own Lockout / Tagout Procedure; the SSCL ES&H Manual's Policy 5-3 can be used until the PRD policy on Lockout / Tagout is adopted.

Gas cylinders should be 'locked out' while working on the gas system, however, this can be accomplished by: 1) Removal of the cylinder valve knob; or 2) Placing a locked box around the cylinder valve; or 3) Locking the Gas Storage cage's door, when the cylinder has been verified to be shut off.

If I can be of further assistance, please advise.....Thanks

Date: 8/21/92
To: Ronn Woolley
From: Richard Guthrie
I don't think that the nature of the TTR requires Lockoput/tagout. Low electrical power, no moving parts, low or nominal gas pressures. How can you lockout one of the gas cylinders?

Do we need to talk?

Date: 8/21/92 10:40 AM
From: Bill Dorn
Just a reminder, this equipment needs to have the physical capability of being locked out for maintenance. Written lockout/tagout procedures per ES&H Manual Chapter 5, sect 3 and OSHA 29CFR1910.147 also need to be established in addition to the orientation training listed on the third page of your checklist.

Superconducting Super Collider Laboratory
2550 Beckleymeade Avenue, Mail Stop 2005
Dallas TX 75237-3946
(214) 708–6189
Fax: (214) 708-6088
Sanders@SSCVX1.SSC.GOV
GEM Project Department

Memorandum

To: GEM Project Department and GEM Physics Group
From: Gary Sanders, GEM Project Manager GS/S
Subject: TTR Fringe Field
Date: July 23, 1992

Following initial operation of the TTR magnet on July 22, and the discovery of the resulting distortion in computer visual displays nearby, we have terminated operation of the magnet. I request that Ronn Woolley, Richard Guthrie, and Gena Mitselmakher hold a meeting and develop a plan for procedures and mitigation measures required to enable future non-interfering operation of the TTR magnet. I would like a report and proposal to be submitted to me as soon as possible.

Until I receive this report and approve the proposed plan, the TTR magnet shall not be operated.

cc: F. Gilman
P. Leibold
R. Richardson

Superconducting Super Collider Laboratory
2550 Beckleymeade Avenue, Mail Stop 2005
Dallas TX 75237-3946
(214) 708-6025
Fax: (214) 708-6088

Physics Research Division

Memorandum

To: Gary Sanders
From: Frank Stocker & Richard Guthrie
Subject: TTR Fringe Field
Date: September 17, 1992

Reference: Letter dated July 27, 1992

The fringe field produced by the TTR lab has been controlled from adversely affecting the surrounding office area. Values of <1 Gauss have been measured at approximately 2.5 meters (8 feet) from the magnet at nominal power (Earth background is about .45 Gauss). [Previously, values of <10 Gauss had been measured at approximately 1 meter from the magnet.] The magnetic field drops off rapidly as you move away from the magnet.

This was accomplished by introducing a secondary magnetic field around the primary TTR magnetic field. This second field essentially "contains" the fringe field closer to the TTR. The TTR magnet, with its secondary magnet, has been operated and has successfully demonstrated the effectiveness of this solution.

There should now be no adverse affects on the computer monitors in the surrounding areas. This level remains tolerable for people wearing pacemakers.

We would like to thank you for your patience as we worked toward the best solution for this problem. If you have any questions or concerns about the TTR magnetic field or the TTR laboratory, please don't hesitate to contact either Frank, Ext. 6025, or Richard, Ext. 6306.

cc: F. Gilman
P. Leibold
R. Richardson

From: Gary Sanders (7/28/92)
To: Richard Guthrie

Reply to: RE>TTR Fringe Field
I approve your plan as proposed. Please coordinate this test carefully with EFD and cognizant PRD personnel. Please keep me informed of the progress of your plan, and any deviations or findings. Gary Sanders GEM Project Manager

---

Date: 7/27/92 2:59 PM
To: Gary Sanders
From: Richard Guthrie
Attached is a memo response to the magnetic fringe field problem generated by the TTR magnet.

Dallas TX 75237-3946
(214) 708–6025
Fax: (214) 708-6088

Physics Research Division

Memorandum

To: Gary Sanders
From: Frank Stocker & Richard Guthrie
Subject: TTR Fringe Field
Date: July 27, 1992

The TTR group is aware of the problems associated with the sensitivity to the fringe field of the TTR magnet.

The fringe field in the TTR lab has been measured by GEM ES&H. Values of <10 Gauss has been measured at approximately 1 meter from the magnet at full power. This level is tolerable for people wearing pacemakers. There are no health problems at the levels of operation of the magnet. No data loss is to be anticipated from such low fields.

It should be noted that the Macintosh computers, in the same cubicle as the affected CAD stations, were not affected. The CAD screens with their high resolution are sensitive to levels of 1 Gauss.

To fully evaluate the magnitude of the problem generated by the fringe field from the TTR magnet, the TTR group requests permission to operate the magnet during non-business hours. During a proposed two day measurement after 5 PM, the magnetic field generated (to include the existing Earth field) will be mapped out. It would be helpful for the affected CAD workstations and nearby Macintoshes to be left ON so that the effects can be determined at various power settings of the magnet.

The proposed schedule for accomplishing this test and implementing mitigating actions:

Data taking 2 days (after 5PM) - July 28 & 29

Magnetic modeling & calculations - 1 week

Fabrication and installation of shielding for the TTR - 2 weeks

cc: F. Gilman
P. Leibold
R. Richardson

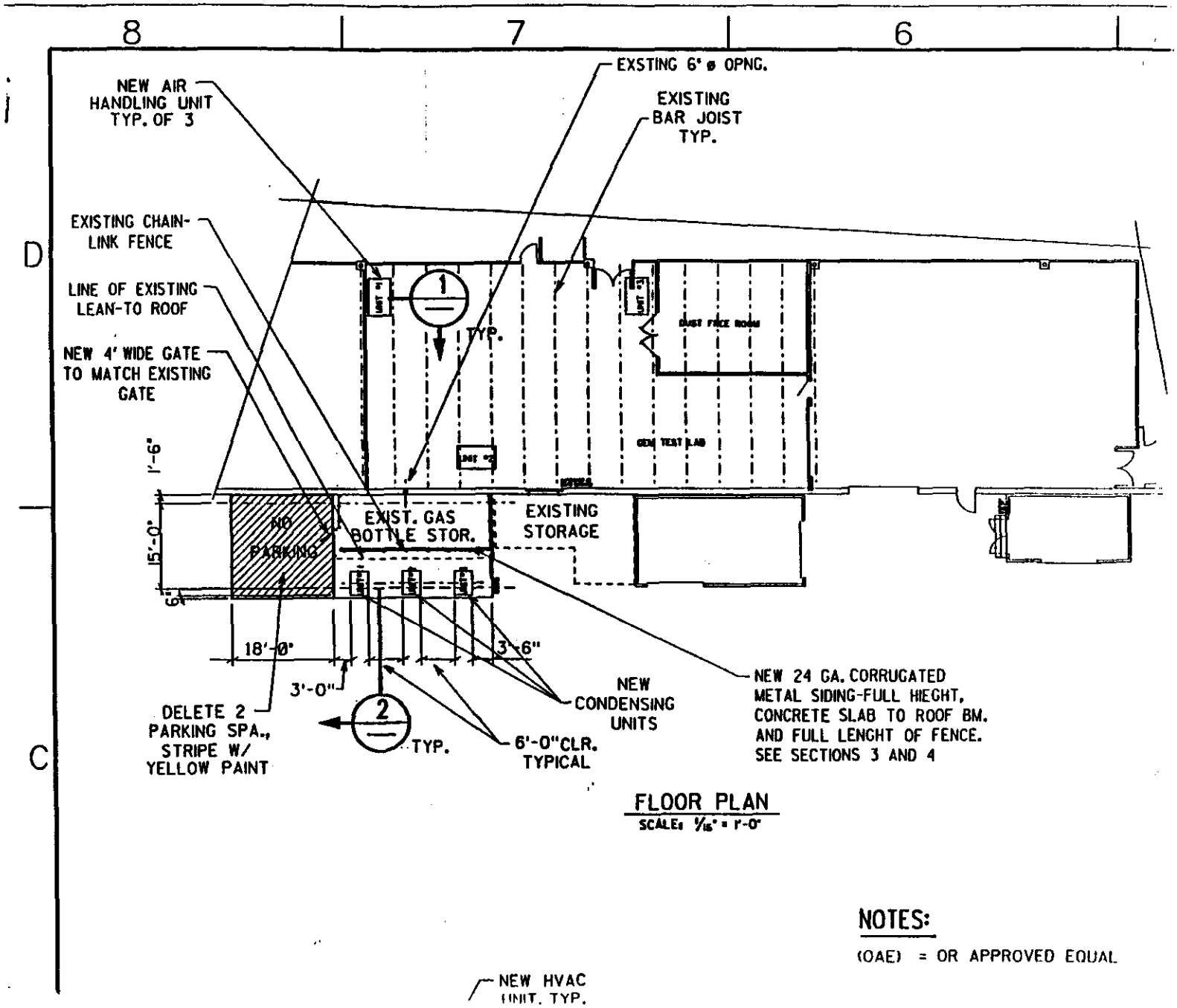

FLOOR PLAN

SCALE: 1/16" = 1'-0"

NOTES:

(OAE) = OR APPROVED EQUAL

Superconducting Super Collider Laboratory
Physics Research
2550 Beckleymeade Avenue, Suite 125
Dallas TX 75237-3946
(214) 708-6267
Fax: (214) 708-0006

Memorandum

To: Distribution

From: Ed Verminski Ed

Date: July 31 1992

Subject: PRD Interim Requirements for Eye, Foot and Head

Copy: Fred Gilman, Phil Leibold, Jerry Gunnels, Larry Coulson, Ben Rietze, William Dorn

---

There is an immediate need to implement safety requirements in PRD for eye, foot, head and fall protection. Attached are interim requirements consistent with OSHA and SSCL ES&H Policy.

ES&H is a line management responsibility. Communication and enforcement of these requirements are the responsibilities of line managers and supervisors. The requirements in each of these areas are primarily task oriented. Therefore, these types of personal protective equipment are required where employees are engaged in potentially hazardous activities. It is also every employee's responsibility to stop unsafe acts (contractors, fellow workers, visitors or any one creating a hazard to themselves or others).

These safety requirements will be developed into a PRD Standard with appropriate formatting and review.

Interim PRD Requirements for Eye, Foot, Head and Fall Protection

Personal protective clothing and equipment are required for various operations in PRD labs and shops. In this regard a PRD practice will be developed. Listed below are basic requirements:

Eye Protection

Eye protection is required in work locations and activities where eye hazards or potential hazards exist e.g., shop areas, laboratories, garages, ground work, construction sites, degreasing, chemical use, machining, carpentry, hazardous waste management, welding, and laser operations.

For frontal impact, high velocity solid particles, e.g., relatively large flying objects such as nails, metal or rock chips, the required eye protection is safety glasses with side shields, either plano or prescription lens.

For dust and small flying particles, e.g., scaling and grinding metals, stone dressing, concrete saw cutting, wood working such as power sawing, planing, etc., and chemical dust or metal dusts, the required eye protection is ventilated impact goggles or chippers goggles.

For chemical splash hazards encountered in chemical laboratories, degreasing operations, cleaning operations, changing and charging batteries, transferring acids, alkalis and other corrosives from container to container or physically handling raw corrosive materials, working with molten metal, cryogens, tar or compounds, the required eye protection is splash goggles or combination splash goggles and full face shield. Safety glasses and side shields may be used as protection against solvent splashes where the solvent does not present a toxic, allergenic or corrosive hazard to the eyes and where the temperature of the solvent does not present a hazard to the eyes.

> ***Warning:*** Contact lenses do not provide eye protection from chemical assault. Also, the space between the contact lens and the cornea may trap any material or particles present on the surface of the eye. Some chemicals cause pain and muscle spasms which make it nearly impossible to remove the lens. Contact lenses must not be worn by persons exposed to chemicals unless chemical splash goggles are worn to provide eye protection. Deviations from use of splash goggles shall be reviewed by the Safety Coordinator.

For reflected welding light and glare and welding flash hazards encountered in electric and acetylene welding, cutting operations and some laser operations, the required eye protection is welder's goggles, hoods or tinted safety glasses with side shields.

> *Note:* Tints for eye protection must receive approval from the Safety Coordinator.

For laser reflected light encountered around laser operations, the required eye protection is laser filtering goggles which have been selected to filter the specific laser frequencies of emissions.

> *Note:* Use of lasers require review by the Safety Coordinator to ensure the proper laser goggles are being used.

For infrared light encountered in some laser operations and in molten processes, e.g., molten glass, metal and other elements, the required eye protection is infrared filtering goggles which have been selected to filter the specific infrared frequencies of emissions.

Head Protection

Head protection is required in work locations and activities where head injuries or potential hazards exist e.g., power plant and utility rooms, construction, rigging and fire fighting.

For areas where individuals may be exposed to head injuries such as in construction, power lineman work, overhead material handling, and in equipment and machinery operating areas the required head protection is the protective hard hat.

For areas where piping protrudes into the work path (less than 6 foot 8 inches), the required head protection is the protective hard hat.

For areas adjacent to walking or working surfaces five feet or greater in height, which are not protected from falling objects, such as in excavations or near platforms, the required head protection is a protective hard hat.

Lab and shop areas requiring hard hats should be stanchioned and roped off to preclude casual entry.

Foot Protection

Foot protection is required in work locations and activities where foot injuries or potential hazards exist e.g., warehouse, maintenance, waste management, construction, material handling, machine shop, and drum and cylinder handling.

For operations where heavy materials are manually carried, rolled or pushed and where materials are moved by vehicle or hoist and where sharp objects can be kicked, the required foot protection is the safety-toe shoe.

For potential chemical spills or splashes, the required foot protection is either boots, rubbers, chemical spats or other impervious footwear.

For wet areas (kitchens, glass washing or open surface tanks), the required foot protection is slip resistant soles on shoes.

Fall Protection

Fall protection is required when work activities are performed on unprotected sides or edges of surfaces which exceed 4 feet above the floor e.g., scaffolds, equipment structures.

For work on scaffolds, platforms, etc. guardrail systems and toeboards are required.

For work activities are performed on unprotected sides or edges of surfaces which exceed 10 feet above the floor and no guard rail system is installed, fall protection harnesses are required.

Superconducting Super Collider Laboratory
2550 Beckleymeade Avenue, Mail Stop 2000
Dallas TX 75237-3946
(214) 708-6216
Fax: (214) 708-6354
electronic-mail: milner@sscvx1.ssc.gov

Physics Research Division
Experimental Physics

Memorandum

To: Whom it may concern
From: E. Cas Milner
Subject: Flowing gas in the TTR
Date: July 20, 1992

Gas connections on the TTR Iarocci chambers have been tested using Argon. The installation was done by Leonid Barabash and verified by Cas Milner. Additionally, the Flammable gas leak detector systems, both commercial and the developmental one supplied by the University of Houston have been installed, tested, and calibrated.

We are now ready to begin flowing Isobutane through the chamber system, and seek approval to do so.

8-7-92

THE FOUR ENMET GAS DETECTION UNITS WERE TESTED AND CALIBRATED IN ACCORDANCE WITH MANUFACTURER'S INSTRUCTIONS.

Richard L. Guthrie

Matt Murphy

Superconducting Super Collider Laboratory
2550 Beckleymeade, Mail Stop 2000
Dallas, Texas 75237-3946
(214) 708-6022

Physics Research Division - GEM ES&H Group

To: Richard Guthrie

From: Jim Truitt

Date: September 22, 1992

Re: TTR Iarocci Chambers

Leak testing of all the fittings and connections of the TTR Iarocci chambers has been completed. All electrical components have been checked out. Also, the TTR gas detection system has been installed.

Jim L. Truitt

NFPA 49

Hazardous Chemicals Data

1991 Edition

Introduction

Purpose.

The National Fire Protection Association Committee on Properties of Hazardous Chemicals recognizes the continuing need to provide guidance on the hazards of chemicals to emergency personnel, safety professionals, inspection and enforcement officials, and architects, designers, and engineers. The committee has developed this publication to respond to needs that may not be fully met by other publications, including material safety data sheets.

The scope statement that follows describes the criteria used by the committee to select the chemicals herein. Undoubtedly, there are chemicals meeting this criteria that have not yet been considered by the committee. Any reader who wishes to propose a chemical for inclusion in NFPA 49 may do so using the data sheet and instructions provided in Appendix C. The completed data sheet should be sent to the Committee on Properties of Hazardous Chemicals, c/o National Fire Protection Association, 1 Batterymarch Park, P.O. Box 9101, Quincy, MA 02269-9101.

Scope.

The information presented in this document is intended for use by personnel who have a basic knowledge of the chemistry of hazardous materials. The information contained herein offers guidance on storage and fire fighting techniques that can be used in an emergency or in disaster planning. It is not intended as a guide for workplace exposure or for relative indices of toxicity.

Only chemicals that are considered to be commercially significant have been included in NFPA 49. To meet this initial criterion, a chemical must be available in containers of 5 gal (18.9 L) capacity or larger, in compressed gas cylinders, or in pallet-load quantities or must otherwise be considered commercially significant. Once this criterion is met, the chemical must pose a distinct hazard by meeting one or more of the following criteria (listed in order of priority):

(a) Chemicals having a Health Hazard Rating of 2 or higher, based upon NFPA 704, *Standard System for the Identification of the Fire Hazards of Materials.*

(b) Chemicals having an NFPA 704 Reactivity Rating of 1 or higher.

(c) Chemicals that present unusual spill control or fire fighting problems.

(d) Chemicals that present unusual storage problems.

Chemicals in the following categories will not be addressed:

(a) Chemicals whose only hazard is mild oxidizing ability.

(b) Commercial explosives and blasting agents.

(c) Chemicals whose only hazard is mild irritation.

(d) Chemicals whose only hazard is flammability.

(e) Commercial formulations of organic peroxides. (*Information on organic peroxide formulations is available in NFPA 43B, Code for the Storage of Organic Peroxide Formulations.*)

(f) Chemicals whose only hazard is one of chronic health hazard, such as carcinogens, mutagens, oncogens, teratogens, and etiologic agents.

(*For information on NFPA 704, Standard System for the Identification of the Fire Hazards of Materials, see Appendix B.*)

Format.

Information is presented in 12 categories, as follows:

1. Identity
2. Statement of Hazards
3. Emergency Response Personal Protective Equipment
4. Spill and Leak Procedures
5. Fire Fighting Procedures
6. Health Hazards
7. Fire and Explosion Hazards
8. Instability and Reactivity Hazards
9. Storage Recommendations
10. Usual Shipping Containers
11. Physical Properties
12. Electrical Equipment Group Classification (if appropriate).

The following sections provide detailed information on each of the 12 categories, including the data presented and its significance.

1. Identity. Chemicals are listed alphabetically according to their proper shipping name, as given by the U.S. Department of Transportation in the Hazardous Materials Table, Part 172.101 of Title 49, Transportation, of the *Code of Federal Regulations* (49CFR172). Any commonly used synonyms are listed and cross-referenced to the proper entry. The Hazard Class to which the chemical is assigned by DOT is listed, along with the ID number. (See additional information below.)

The number under which the chemical is registered by the Chemical Abstracts Service of the American Chemical Society is listed. The CAS number used is that which appears in the current TOSCA Chemical Substances Inventory, Volumes II and III: Substance Name Index. The user is cautioned that more than one CAS number may exist for certain chemicals.

The chemical's structural line formula is given, according to the protocol of the International Union of Pure and Applied Chemistry. Double and triple bonds are indicated by double and triple horizontal lines. Ringed structures are shown only where necessary for a clear understanding of the arrangement of the molecule.

	Health	Flammability	Reactivity	Special
Butane	1	4	0	NON
Ethane	0	4	0	SA
methane	0	4	0	
Isobutane	1	4	0	None

Per MSDS

NATIONAL 42-182 100 SHEETS

ORIGINAL

FSR NO.- 4492
PRIORITY-2 A S A P

FACILITIES SERVICE REQUEST

Site Name: OSR4 - STONERIDGE BUILDING 4 Date In: 082692

MWI No: GENERAL SVCS Cost Account: XPHA9LT

MWI Name: GENERAL SERVICES - MISCE Location: TTR LAB

Phone: 6306 Requestor: R. GUTHRIE

Shop Assigned To: 1 - ELECTRICAL

Referenced FSR:

WORK TASK(S) / PROBLEM(S)

1. 2628 WIRING - INSTALL/REMOVE

2.

SCHEDULER COMMENTS

*** OSHA VIOLATION
THE EXISTING A/C UNIT FOR THE LAB NEEDS TO HAVE THE FAN HARD WIRED TO RUN CONTINUOUSLY

MAINTENANCE WORKER'S ANALYSIS

Comments	Hrs	Initials
1. Meet w/Requestor.	.5	PC.
2.		
3.		
4.		
5.		

As built drawings required: (Y/N) Requestor Sign/Date: [illegible]

PARTS

Qty	Part #	Description	Location
[illegible]			

AUG 1992 RECEIVED WB

Accomplished 9/2/92

AUG 1992
RECEIVED

SSC LABORATORY
FACILITIES SERVICE REQUEST

REQUESTER Richard Guthrie		DIVISION PRD/GEM	
PHONE 6306	BUILDING Bldg 4	ROOM TTR LAB	DATE 8/25/92
COST ACCOUNT CODE XPHA-9LT		SUPERVISOR APPROVAL F. Stocker	

This request for services is to abate an OSHA violation that resulted from an inspection of:

TTR LAB (location) on 8/24/92 (date)

THE EXISTING AIR CONDITIONING UNIT FOR THE LAB NEEDS TO HAVE ITS FAN HARD WIRED TO RUN CONTINUOUSLY.

SUBMIT TO FACILITES ENGINEERING AND MAINTENANCE

HALLET JOHNSON KS2030 LTS
SR3 FAX 708-8864 FEM
5156 12-14-90

SSC LABORATORY
FACILITIES SERVICE REQUEST

REQUESTER Richard Guthrie		DIVISION PRD/GEM	
PHONE 6306	BUILDING Bldg 4	ROOM TTR LAB	DATE 8/25/92
COST ACCOUNT CODE XPHA-9LT		SUPERVISOR APPROVAL F. Shocker	

This request for services is to abate an OSHA violation that resulted from an inspection of:

TTR LAB (location) on 8/24/92 (date)

THE EXISTING AIR Conditioning unit for the LAB NEEDS TO HAVE ITS FAN HARD WIRED TO RUN continuously.

SUBMIT TO FACILITES ENGINEERING AND MAINTENANCE

HALLET JOHNSON NS2030 SR3 FAX 708-8160 5156 LTS FELN 12-14-90

SSC LABORATORY
FACILITIES SERVICE REQUEST

REQUESTER		DIVISION	
Richard Guthrie		PRD/GEM	
PHONE	BUILDING	ROOM	DATE
6306	Bldg 4	TTR LAB	8/25/92
COST ACCOUNT CODE		SUPERVISOR APPROVAL	
XPHA-9LT		F. Stocks	

This Special request for services is to correct a Safety Code violation that was found during an inspection of:

TTR on 8/24/92
(location) date

Please be specific about type an location of problem.

THE GAS LEAK DETECTION SYSTEM & THE EMERGENCY POWER OFF SWITCHES ARE NOT WIRED IN ACCORDANCE WITH DRAWING # T39-000012. THEY DO NOT CUT POWER OFF TO THE TTR & ACTIVATE THE EMERGENCY FAN.

SUBMIT TO FACILITES ENGINEERING AND MAINTENANCE

HALLET JOHNSON MS2030 LTS
303 FAX 708-[illegible] 5156 FEM 12-14-90

SSC LABORATORY
FACILITIES SERVICE REQUEST

REQUESTER Richard Gutierrez		DIVISION PRD	
PHONE 6306	BUILDING 4	ROOM 4543	DATE 8-21-92
COST ACCOUNT CODE XPHA 9LT		SUPERVISOR APPROVAL [illegible]	

Bond 3 vent lines to Existing Lightning Protection system of Building 4.

Request work be accomplished prior to 8-26-92.

Request "No Smoking Sign within 50 feet" be posted on Roof at the Location of the vent pipes.

Request this be accomplish at same Time Bonding is made.

SUBMIT TO FACILITES ENGINEERING AND MAINTENANCE

HALLET JOHNSON MS2030 SR3 FAX 708-5156 LTS FEM 12-14-90

1.0 INTRODUCTION

ENMET's Model ISA-44 detector/alarm is an all solid-state electronic gas-detecting instrument that minimizes the risk of harm or death to people who are exposed to potentially hazardous gas environments. It continuously monitors for combustible or toxic gases and warns of a dangerous gas situation with enough time to take action to avoid harm. Audio (horn) and visual (light) alarms are calibrated to trigger at both high and low level gas concentrations.

The unit mounts to a wall or panel and operates continuously from either 110 Vac, 220 Vac and/or 12 Vdc power. It has two relay contacts to operate external signals or equipment when the hazardous gas exceeds the preset alarm level.

1.1 How It Works

The ISA-44 uses a gas-sensitive metallic oxide semiconductor (MOS) sensing element which reacts to toxic and combustible gas molecules. An oxidation reaction occurs on the sensor surface when contaminants are present. The oxidation reaction changes the sensor's electrical resistance which then triggers the alarm circuitry when the concentration of gas goes beyond a preset level.

ISA-44-2 has two identical circuits with related sensors. Each circuit-sensor combination makes up a separate channel of gas detection. Each sensor can be located up to 1000 feet from the circuit enclosure and connected electrically by wire or cable.

The ISA-44OD includes a sensor and circuitry for the detection of oxygen dificiency. It is described in paragraph 8.0 through 8.3.

2.0 UPON RECEIPT

1. Unpack and inspect the ISA-44 for damage which might have occurred during shipment.

2. Make sure the instrument is calibrated according to your order. Check the orange dots; these international orange calibration stickers indicate the alarm levels.

3. DO NOT USE DAMAGED OR INCORRECT EQUIPMENT. If there is a problem, contact your distributor or ENMET personnel right away.

4. READ THIS MANUAL CAREFULLY AND THOROUGHLY.

3.0 FEATURES AND CONTROLS

3.1 External Features (refer to Fig. 1)

POWER LIGHT	When this light is on, the unit is operating normally (not in alarm). When this light is off, the unit is in alarm or the power to the unit has been interrupted.
GAS ALARM LIGHT (amber)	Visual alarm for low-level gas concentration. Relay contacts can be hooked up to activate remote signals.
GAS ALARM LIGHT (red)	Visual alarm for high-level gas concentration. Relay contacts can be hooked up to activate remote signals.
METER	A gas concentration meter. The scale is marked in parts per million (ppm) for toxic gas detection or percent lower explosive limit (% LEL) for combustible gas. The meter is a non-linear device, so the scale does not express specific gas concentrations for regions between the alarm points. DO NOT infer exact readings from unmarked regions of the meter scale.
HORN	Audio alarm (104 dB at 10 ft.).
PURGE SWITCH	To increase the sensor heater voltage; to make it hot enough to purge (clear) the sensor of contaminating molecules that accumulate on its surface. Not all units have this switch; it's only on units (or channels) for toxic gas or vapor detection.
HORN SWITCH	Rotary ON/OFF switch for audio alarm; to silence the horn during warm-up, calibration and maintenance.
RELAY OUTPUT	For both high and low-level alarms. Terminals are located on TB1. Relays can activate a remote alarm signal either when a hazardous gas level is detected or when the ac or dc power is interrupted. There are two double-pole relays. These furnish normally open, normally closed, and common terminals.

3.2 Internal Circuitry (refer to Fig. 5)

	Relay current: 5 amps, non-inductive surge; 2 amps, steady.
POTENTIOMETERS	The potentiometers (pots.) are used to adjust critical circuit resistances, which vary the sensor sensitivity, and they are essential to calibration procedures. These pots. are described below.
Heater Adjust (R1)	For adjusting the sensor heater voltage (see section 4.4).
Low Level Alarm (R2)	For low-level alarm adjustment (calibration).
High Level Alarm (R3)	For high-level alarm adjustment (calibration).
Meter Adjust (R4)	To adjust and set the meter for the appropriate gas response (calibration; see section 6.0).
Purge Adjust (R37)	This is a necessary pot. for adjusting the sensor heater voltage on units with a purge switch. On units without a purge switch, this is a supplemental pot. for increasing the heater voltage when the sensor is located far from the control unit.

4.0 INSTALLATION

4.1 Power Hook-Up and Mounting

The ISA-44 is completely oiltight. Use the correct oiltight fitting for the cord or conduit when supplying power to the unit.

1. Choose a suitable location for mounting the electronics control unit.

2. Open up the control unit. Remove the white terminal strip cover from TB3. Simply pull the white cover off the metal prongs.

3. Apply 115 Vac or 12 Vdc to the proper terminals. Refer to Fig. 5. As an emergency back-up power source, BOTH ac and dc power can be applied at the same time. Current will flow from the ac source; dc current will flow only when the ac power is interrupted. Note: 220 Vac power requires a change in the transformer hook-up by a competent electrician

4.1 Power Hook-Up and Mounting (continued)

or electronics technician, but this change is best done at ENMET.

4. Run the relay contacts through the same oiltight fitting as the power cord leads or out through a second fitting. Refer to Fig. 2. When the power supply is interrupted, the relays switch to the same position as for the true gas alarm condition and the power light goes off. DO NOT CONNECT THE UNIT TO OTHER VOLTAGE SUPPLY LINES.

5. Replace the terminal strip cover to TB3. Make sure it fits snugly into the prongs.

4.2 Sensor Location

Gases have different densities. Some are heavier than air and concentrate at the bottom of a space. Some are lighter than air and gather at the top. Consider the density of the gas you want the sensor to detect when you install the sensor. Some examples are give below.

Heavier than Air	Sensor Location
Bottled LP (liquefied petroleum) Propane Butane Gasoline Trichloroethylene Vaporized hydrocarbons Hydrogen sulfide	Interior wall; 18-24" from floor. DO NOT locate directly above or beside gas appliances (ovens, heaters). Avoid locating anywhere near a vent or window or near an outside doorway.

Lighter than Air	Sensor Location
Natural gas (methane) Ammonia Hydrogen	Near ceiling. DO NOT locate directly above appliances where it is subject to direct exposure to heat or steam.

Same Density as Air	Sensor Location
Carbon Monoxide (generally uniformly)	4-6 feet above the floor. DO NOT locate in direct air currents of windows, doors, or vents.

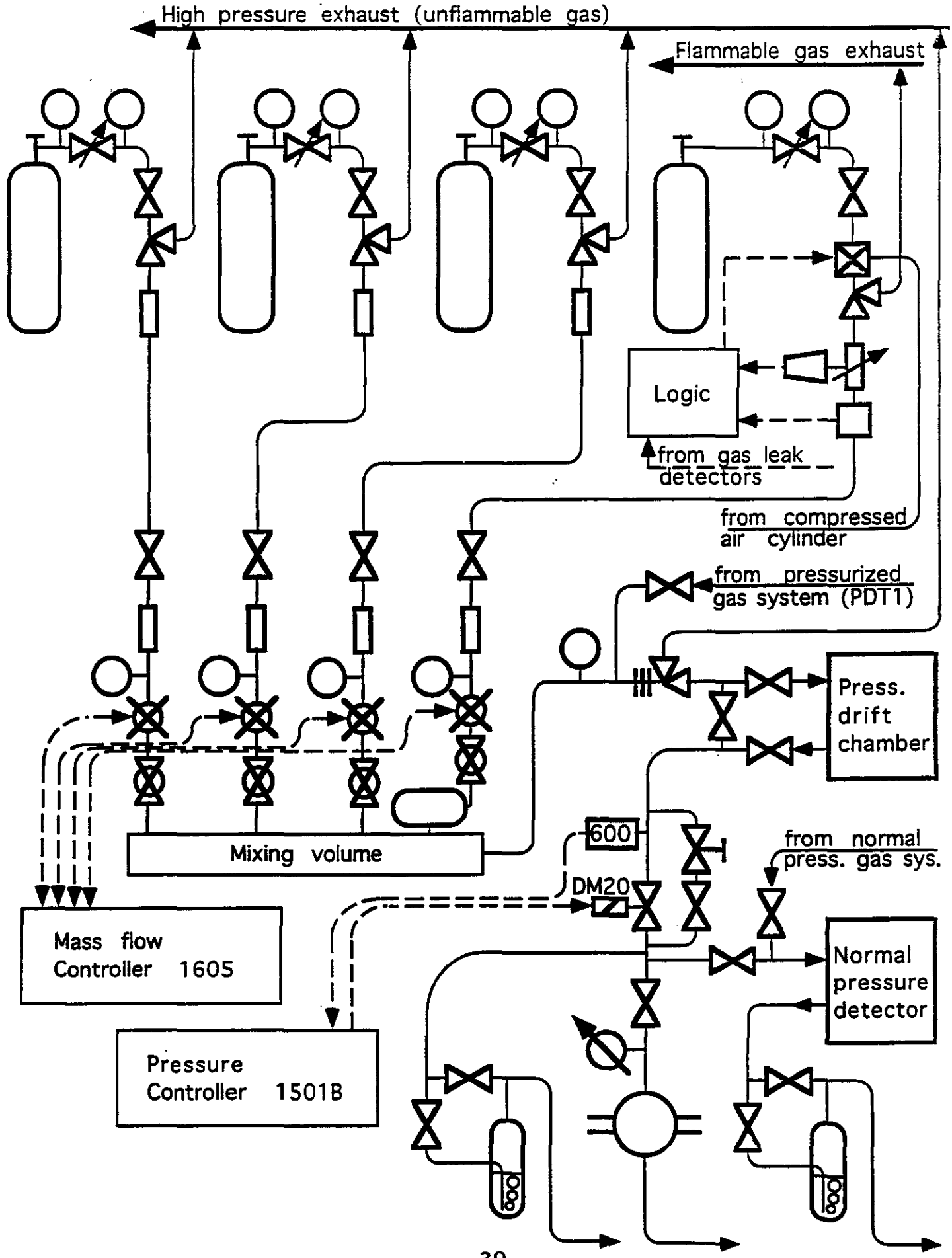
High pressure exhaust (unflammable gas)
Flammable gas exhaust
Logic
from gas leak detectors
from compressed air cylinder
from pressurized gas system (PDT1)
Press. drift chamber
Mixing volume
600
DM20
from normal press. gas sys.
Mass flow Controller 1605
Normal pressure detector
Pressure Controller 1501B

NEAR-DIFFRACTION SEALED NITROGEN LASER

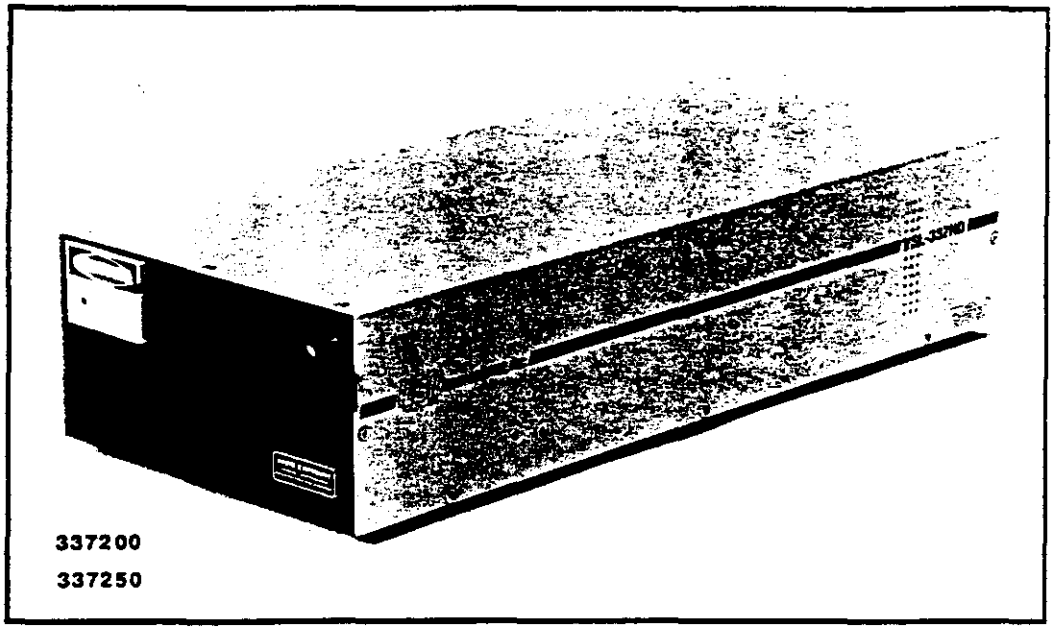

"sealed plasma cartridge"

"high pulse energy"

"low beam divergence"

"low jitter"

"RF shielded"

"powerful research tool"

In 1986 **Laser Science, Inc.** introduced the second wave in the series of sealed pulsed nitrogen lasers, the VSL-337ND. It was quickly followed by the VSL-337ND-T, a low jitter nitrogen-thyratron design. Both lasers maintain the VSL-337's innovative technology of the sealed (no flowing gas) plasma cartridge. Affordably priced, the lasers have performed exceptionally well in such areas as research, teaching and OEM development.

The two models emit 85kw of peak power at 337nm in a 3ns pulse. They each have a low beam divergence for a collimated focusable output and generate twice as much energy as the VSL-337 when pumping dye lasers. The VSL-337ND's pulse rate is adjustable from 1-20Hz and has a ±10ns nominal pulse to pulse jitter. The VSL-337ND-T has an adjustable repetition rate of up to 10Hz at a ±5ns jitter for crucially timed event applications. Constant pulse shape and good pulse to pulse stability are innate properties of the fixed electrode design assisted by discharge stabilizing preionizers. Turnkey operation without additional gas connection, warm-up time or other adjustments is an inherent advantage of this laser. The sealed plasma cartridge's modular design incorporates all replaceable components. The cartridge is warranted for 20 million pulses. Having a spare cartridge virtually eliminates down time since it only takes a few minutes, and no special tools or skills, to replace the cartridge in the laboratory or in the field. The lasers are RF shielded eliminating interference with detectors or sensitive electronic equiment.

Because the VSL-337ND and the VSL-337ND-T lasers offer excellent performance, they have proven to be effective at undergraduate and graduate university levels for teaching and research. Government and industry have also used the nitrogen lasers as powerful research tools and to replace lamp excitation sources in instruments resulting in better signal to noise ratios. The VSL-337ND is being used for such experiments as: LIF, specimen stimulation, cellular manipulation - including microinjection and microsurgery, UV remote sensing, ionization, semiconductor processing and pumping dyes. The VSL-337ND-T is particularly suited for time of flight, high-speed photography, time resolved fluorescence, non-linear laser spectroscopy and other critically timed applications.

Laser Science, Inc. is a full service organization. Our technical staff will be pleased to discuss your particular application and assist you in selecting the products that best meet your requirements.

Specifications	VSL-337ND Catalog #337200	VSL-337ND-T Catalog #337250
Wavelength	337.1nm	337.1nm
Spectral Bandwidth	.1nm	.1nm
Repetition Rate	1-20Hz	1-10Hz
Pulse Width (FWHM)	3ns	3ns
Pulse Energy	>250uJ	>250uJ
Peak Power	85kW	85kW
Average Power*	>3.0mW @ 20Hz	>1.5mW @ 10Hz
Delay Time (nominal)	600ns	300ns
Jitter	±10ns (nominal)	±5ns
Beam Size (area)	40sq.mm	40sq.mm
Beam Divergence (full angle)	<.3mrad	<.3mrad
Pulse to Pulse Stability	±4% @10Hz	±4% @ 10Hz
Noise	RFI/EMI Shielded	RFI/EMI Shielded
External Trigger	TTL	TTL**
Dimensions	18.2"x7.6"x4.1" (46.3x19.3x10.4cm)	18.2"x7.6"x4.1" (46.3x19.3x10.4cm)
Weight	16 lbs/7.3kg	16 lbs/7.3kg

Due to a policy of continuous product development, specifications are subject to change.
*Warranted after 20,000,000 pulses or 2 years.
**Requires external triggering and a seperate 12V DC, 4A power supply (cat. #337932 or cat. #337933)

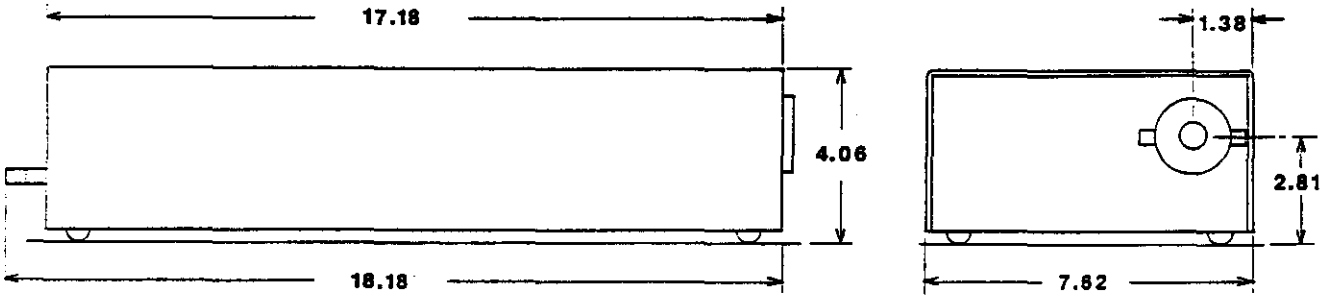

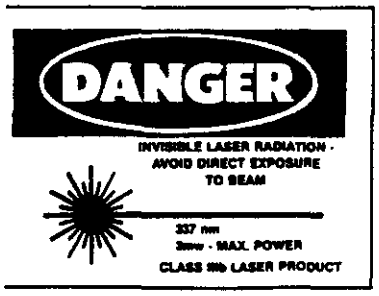

laser science, inc.
26 Landsdowne Street
Cambridge, Massachusetts 02139
(617) 225-2929 (800) 447-1020
ITT-TLX: 443-0136 FAX: (617) 225-0535

89

TTR-Personal Training Status

					Electrical Safety	Safety Orientation	Hazcom	Fire Exting.	Laser	eye Exam.	Radiation	Compressed Gas	Lifting	Gantry	Swagelok Fittings	Swagelok Valves
					August, 3	August, 3		July, 28	July, 30		July, 29	July,23		8/17-8/18		
Leonid	Barabash	6319	Guest S.	Phy.	X	X	X	X	X			X			X	X
Yuri	Bonushkin	3078	Guest S.	Phy.	X	X	X	X	X		X				X	X
William	English		Student	Technol.	X	X	X	X	X		X	X				
Yu	Fiaslak	6332	SSC Emp.	Phy.				X								
Igor	Golutvin	3064	Guest S.	Phy.												
Arturo	Gonzalez	6209	Guest S.	Phy.	X	X	X	X	X		X	X				
Gary	Hughes	6022	SSC Emp.	Tech	X	X	X	X	X		X	X	X		X	X
Kevin	Johnson		Student	Technol.			X		X		X	X				
Ken	McFarlane	6120	SSC Emp.	Phy.			X	X	X			X				
Cas	Milner	6216	SSC Emp.	Phy.			X	X	X			X				
Gena	Mitselmakher	6001	SSC Emp.	Phy.												
Paul	Murat	3066	SSC Emp.								X					
Andrey	Ostapchuk		Guest S.	Phy.												
Greg	Plant	6308	SSC Emp.	Tech	X	X	X	X	X		X	X	X		X	X
Viktor	Sarantsev	6321	Guest S.	Phy.												
David	Shackelford	6308	SSC Emp.	Tech	X	X	X	X	X		X	X	X			
Frank	Stocker	6025	SSC Emp.	Phy.			X	X	X		X	X			X	
Aaron	Taurog	6216	Student				X	X	X		X	X				
Victor	Tchistilin	6385	Guest S.	Phy.	X	X	X	X	X			X			X	X
Lloyd	Thomas	3537	Student	Technol.			X		X		X					
Hector	Trevizo	3012	Student		X	X	X	X	X		X	X				
Jim	Trulit	6308	SSC Emp.	Sen. Tech	X	X	X	X	X		X	X	X		X	X
Sasha	Vanyashin	6211	Guest S.	Phy.								X				
Luis	Villasenor	6209	Guest S.	Phy.	X	X	X	X	X		X	X				
Andrew	Wilcox	3012	Student					X	X			X				
Gorge	Yost	6028	SSC Emp.	Phy.	X	X	X	X	X		X	X				
Valeri	Zhukov		Guest S.	Phy.											X	
Ewald	Zimmer-Nixdorf	6205	SSC Emp.	Eng.	X	X	X	X	X		X	X			X	X

TTR-Personal Training Status

					Electrical Safety	Safety Orientation	Hazcom	Fire Exting.	Laser	eye Exam.	Radiation	Fim Badge	Compressed Gas	Lifting	Gantry	Swagelok Fittings	Swagelok Valves
					August, 3	August, 3		July, 28	July, 30		July, 29	July, 29	July,23		8/17-8/19		
Leonid	Barabash	6319	Guest S.	Phy.	X	X	X	X	X				X			X	X
Yuri	Bonushkin	3078	Guest S.	Phy.	X	X	X	X	X	X	X	X				X	X
William	English		Student	Technol.	X	X	X	X	X		X		X				
Yuri	Ershov	6361	Guest	Eng.													
Yu	Fisslak	6332	SSC Emp.	Phy.				X									
Igor	Golutvin	3064	Guest S.	Phy.								?					
Arturo	Gonzalez	6209	Guest S.	Phy.	X	X	X	X	X		X		X				
Gary	Hughes	6022	SSC Emp.	Tech	X	X	X	X	X		X	X	X	X	X	X	X
Kevin	Johnson		Student	Technol.			X		X		X		X				
Vadim	Lyslakov	6361	Guest	Eng.													
Ken	McFarlane	6120	SSC Emp.	Phy.			X	X	X				X				
Cas	Milner	6216	SSC Emp.	Phy.			X	X	X		X	X	X				
Gena	Mitselmakher	6001	SSC Emp.	Phy.								?					
Sergy	Movchan	6361	Guest S.	Phy.													
Paul	Murat	3066	SSC Emp.								X	?					
Andrey	Ostapchuk		Guest S.	Phy.													
Jaques	Pier-Amory	3266	SSC Emp.														
Greg	Plant	6308	SSC Emp.	Tech	X	X	X	X	X		X	X	X	X		X	X
Viktor	Sarantsev	6321	Guest S.	Phy.													
David	Shackelford	6308	SSC Emp.	Tech	X	X	X	X	X		X		X	X			
Frank	Stocker	6025	SSC Emp.	Phy.			X	X	X		X		X			X	
Aaron	Taurog	6216	Student				X	X	X		X		X				
Victor	Tchistilin	6385	Guest S.	Phy.	X	X	X	X	X			X	X			X	X
Lloyd	Thomas	3537	Student	Technol.			X		X		X						
Hector	Trevizo	3012	Student		X	X	X	X	X		X		X				
Jim	Truitt	6308	SSC Emp.	Sen. Tech	X	X	X	X	X	X	X	X	X	X	X	X	X
Sasha	Vanyashin	6211	Guest S.	Phy.									X				
Luis	Villasenor	6209	Guest S.	Phy.	X	X	X	X	X		X	X	X				
Andrew	Wilcox	3012	Student					X	X				X				
Gorge	Yost	6026	SSC Emp.	Phy.	X	X	X	X	X		X		X				
Valeri	Zhukov		Guest S.	Phy.												X	
Ewald	Zimmer-Nixdorf	6205	SSC Emp.	Eng.	X	X	X	X	X	X	X		X			X	X

Chambers to be delivered to TTR:

Technology	Chamber size	TTR delivery date
PDT-JINR	1 m x 4 m x 8 layers	7/28/92 (delivered)
PDT-MSU	1.3 m x 3.8 m x 4 layers	9/11/92
LSDT	1 m x 4 m x 4 layers	9/20/92
RPC	1 m x 2 m x 2 layers	9/20/92
CSC-BU	0.5 m x 0.6 m x 3 x 2 layers	9/16/92
CSC-BNL	0.6 m x 0.6 m x 2x4 layers	9/15/92
CSC-BNL	1 m x 1.8 m x 4 layers	---------
CSC-UH	0.5 m x 1 m x 3 layers	9/15/92
CSC-JINR	1.1 m x 1.5 m x 2 layers	9/28/92 +

TTR-Personal Training Status

					Electrical Safety	Safety Orientation	Hazcom	Fire Exting.	Laser	eye Exam.	Radiation	Film Badge	Compressed Gas	Lifting	Gantry	Swagelok Fittings	Swagelok Valves
					August, 3	August, 3		July, 28	July, 30		July, 29	July, 29	July,23		8/17 8/19		
Leonid	Barabash	6319	Guest S.	Phy.	X	X	X	X	X				X			X	X
Yuri	Bonushkin	3078	Guest S.	Phy.	X	X	X	X	X	X	X	?				X	X
William	English		Student	Technol.	X	X	X	X	X		X		X				
Yu	Fisalak	6332	SSC Emp.	Phy.				X									
Igor	Golutvin	3064	Guest S.	Phy.								?					
Arturo	Gonzalez	6209	Guest S.	Phy.	X	X	X	X	X		X		X				
Gary	Hughes	6022	SSC Emp.	Tech	X	X	X	X	X		X		X	X		X	X
Kevin	Johnson		Student	Technol.			X		X		X		X				
Ken	McFarlane	6120	SSC Emp.	Phy.			X	X	X				X				
Cas	Milner	6216	SSC Emp.	Phy.			X	X	X		X	X	X				
Gena	Mitseimakher	6001	SSC Emp.	Phy.								?					
Paul	Murat	3066	SSC Emp.								X	?					
Andrey	Ostapchuk		Guest S.	Phy.													
Greg	Plant	6308	SSC Emp.	Tech	X	X	X	X	X		X		X	X		X	X
Viktor	Sarantsev	6321	Guest S.	Phy.													
David	Shackelford	6308	SSC Emp.	Tech	X	X	X	X	X		X		X	X			
Frank	Stocker	6025	SSC Emp.	Phy.			X	X	X		X		X			X	
Aaron	Taurog	6216	Student				X	X	X		X		X				
Victor	Tchistilin	6385	Guest S.	Phy.	X	X	X	X	X			?	X			X	X
Lloyd	Thomas	3537	Student	Technol.			X		X		X						
Hector	Trevizo	3012	Student		X	X	X	X	X		X		X				
Jim	Truitt	6308	SSC Emp.	Sen. Tech	X	X	X	X	X	X	X	X	X	X		X	X
Sasha	Vanyashin	6211	Guest S.	Phy.									X				
Luis	Villasenor	6209	Guest S.	Phy.	X	X	X	X	X		X		X				
Andrew	Wilcox	3012	Student					X	X				X				
Gorge	Yost	6028	SSC Emp.	Phy.	X	X	X	X	X		X		X				
Valeri	Zhukov		Guest S.	Phy.												X	
Ewald	Zimmer-Nixdorf	6205	SSC Emp.	Eng.	X	X	X	X	X	X	X		X			X	X

Ewald Zimmer-Nixdorf, 9/11/92

SSC LABORATORY
FACILITIES SERVICE REQUEST

REQUESTER R. Guthrie		DIVISION PRD/GEM	
PHONE 6306	BUILDING 4	ROOM TTR Room	DATE Oct 1, 1992
COST ACCOUNT CODE XPHA-9LT		SUPERVISOR APPROVAL	

This Special request for services is to correct a Safety Code violation that was found during an inspection of:

TTR LAB Bldg 4 on 9/22/92
(location) date

Please be specific about type an location of problem.

1. PROVIDE ADEQUATE ~~BO~~ ELECTRICAL BONDING TO GROUND FOR GAS/ELECTRICAL RACKS AND THE LASER EXPERIMENT FIXTURE/RACK.
2. VERIFY ADEQUACY OF SINGLE POINT ELECTRICAL ~~BONDING~~ GROUND FOR TTR FRAME.

SUBMIT TO FACILITES ENGINEERING AND MAINTENANCE

HALLET JOHNSON KS2030 LTS
SRI FAX 708-[illegible] FEM
5156 12-14-90

SSC LABORATORY
FACILITIES SERVICE REQUEST

REQUESTER R. Guthrie		DIVISION PRD/GEM	
PHONE 6306	BUILDING 4	ROOM TTR Room	DATE Oct 1, 1992
COST ACCOUNT CODE XPHA-9LT		SUPERVISOR APPROVAL	

This Special request for services is to correct a Safety Code violation that was found during an inspection of:

TTR LAB Bldg 4 on 9/24/92
(location) date

Please be specific about type an location of problem.

THE EAST EXIT FROM TTR LAB & EAST EXIT FROM TTR STAGING ROOM & EXIT TO EGRESS ALL NEED EXIT SIGNS THAT SHOW CORRECT PATH TO EGRESS.

SUBMIT TO FACILITES ENGINEERING AND MAINTENANCE

HALLET JOHNSON KS2030 LTS
SR3 FAX 708-[illegible] 5156 FELM 12-14-90

SSC LABORATORY
FACILITIES SERVICE REQUEST

REQUESTER R. Guthrie		DIVISION PRD/GEM	
PHONE 6306	BUILDING 4	ROOM TTR Room	DATE Oct 1, 1992
COST ACCOUNT CODE XPHA-9LT		SUPERVISOR APPROVAL	

This Special request for services is to correct a Safety Code violation that was found during an inspection of:

TTR LAB (South side of Bldg 4) on 9/24/92

(location) **date**

Please be specific about type an location of problem.

THE TWO ADJACENT PARKING SPACES WEST of GAS PAD NEED TO BE MARKED OFF FOR "NO PARKING"

SUBMIT TO FACILITES ENGINEERING AND MAINTENANCE

HALLET JOHNSON NS2030 LTS
383 FAX 708-[illegible] 5156 FEIM 12-14-90

Superconducting Super Collider Laboratory
2550 Beckleymeade, Mail Stop 2005
Dallas, Texas 75237-3946
(214) 708-6510

Physics Research Division - GEM ES&H Group

To: Mary Keen

From: Richard Guthrie

Date: October 1, 1992

Re: Sound Level Survey

A sound level neasurement or survey is requested for the Texas Test Rig (TTR) Laboratory. It is requested that this survey be performed with all of the air conditioning units in operation (worst case noise situation).

It would be greatly appreciated that this survey be performed as soon as practicle as it is an open item for the TTR Safety Evaluation. Thank you.

	A	B	C	D	E	F	G	H
1								
2		Shelf						
3		load per shelf	1000.00	kg				
4								
5								
6								
7		Spars						
8		Number of spars:	4					
9		uniform load per sparren:	250.00	kg				
10		force:	2500.00	N				
11		length of spars:	2800.00	mm				
12		standart beam typ:	W4x13		S3x5.7			
13		Widerstandsmoment S:	5.45	in3	1.68	in3		
14			89309.50	mm3	27530.27	mm3		
15		Traegheitsmoment	11.30	in4	2.52	in4		
16			4703415.11	mm4	1048903.19	mm4		
17		Stress in beam:	9.80	N/mm2	31.78	N/mm2		
18		Support load per end:	1250.00	N				
19								
20		Type of bolts:	A307, 5/8in					
21		useble stress per bolt:	3.10	kips				
22			14061.60	N				
23		Number of bolts:	2					
24		safety factor:	22.50					
25								
26								
27		welding	double J groove					
28			a=3, l=50					
29		useble stress	40500.00	N				
30		safety factor:	32.40					
31								
32								
33		Shelf Beam (2 peaces)						
34		length of beam:	5000.00	mm				
35		for loads of	1250.00	N				
36		torkmoment (Dubbel 187):	3125000.00	Nmm				
37		standart beam typ:	W6x15.5		W6x12		W6x8.5	
38		Widerstandsmoment x-x (S)	10.00	in3	7.25	in3	5.08	in3
39			163870.64	mm3	118806.21	mm3	83246.29	mm3
40		Widerstandsmoment Y-Y (S)	3.23	in3	1.49	in3	1.08	in3
41			52930.22	mm3	24416.73	mm3	17698.03	mm3
42		Traegheitsmoment X-X (I)	30.10	in4	21.70	in4	14.80	in4
43			12528565.91	mm4	9032221.94	mm4	6160225.10	mm4
44		Traegheitsmoment Y-Y (I)	9.67	in4	2.98	in4	1.98	in4
45			4024957.89	mm4	1240369.65	mm4	824138.22	mm4
46		Stress in beam:	19.07	N/mm2	26.30	N/mm2	37.54	N/mm2
47		Support load per end:	2500.00	N				
48								
49		Type of bolts:	A307, 5/8in					
50		useble stress per bolt:	3.10	kips				
51			14061.60	N				
52		Number of bolts:	2					
53		safety factor:	11.25					
54								
55								
56								
57		welding	double J groove					
58			a=3, l=50					
59		useble stress	40500.00	N				
60		seattyfactor:	16.20					
61								
62								
63								
64								
65								
66								
67								
68								
69								

Concept conversion

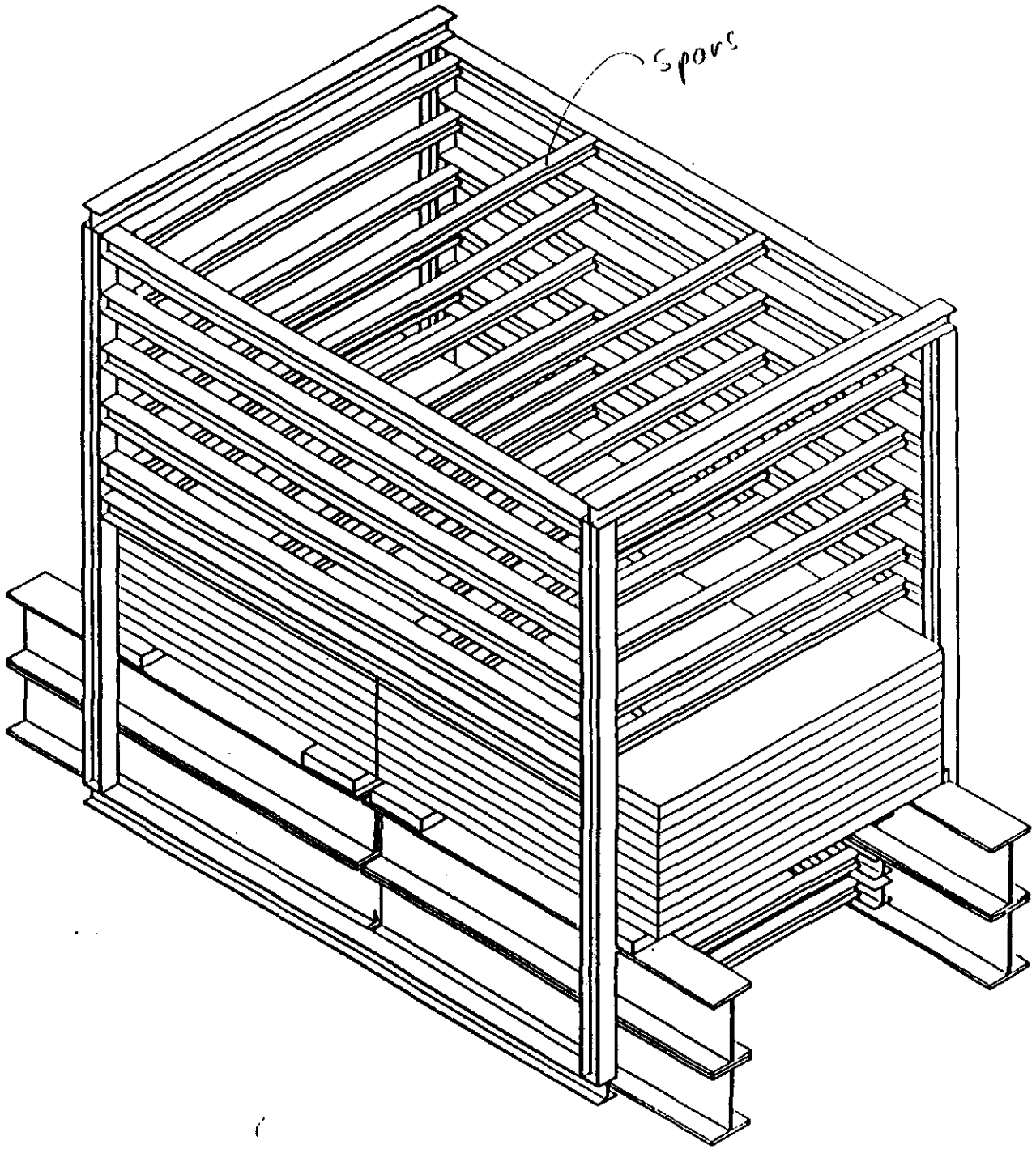

	A	B	C	D	E	F	G	H
70		Pillar						
71		Number of beams per pillar	5					
72		beam length:	4800.00	mm				
73		load per support	12500.00	N				
74		standart beam typ	W6x15.5		W6x12		W6x8.5	
75		area	4.56	in2	3.54	in2	2.51	in2
76			2941.93	mm2	2283.87	mm2	1619.35	mm2
77		stress	4.25	N/mm2	5.47	N/mm2	7.72	N/mm2
78		buckling strength						
79		Knick-typ lk/l=i	1		1		1	
80		Knick-kraft	361707.45	N	111467.24	N	74062.13	N
81		Knicksicherheit	28.94		8.92		5.92	
82		Traegheitsradius i	36.99		23.30		22.56	
83		Schlankheit l	129.77		205.97		212.77	
84		Knickspannung sigk	122.95		48.81		45.74	
85		Knickspannungs Sicherh.	28.94		8.92		5.92	
86								
87								
88		Top beam						
89		Querload: 5% fo 5 tonnes	2500.00	N				
90		Mb (l=3100,a=500,b=l-a)	1854838.71	Nmm				
91		Spannung	75.97					
92								
93								
94								

	A	B	C	D
1				
2		Zunge		
3				
4		load	16353.17	N
5		load per lngth	8.77	N/mm
6		Einspannmoment	15241154.66368	N*mm
7		widerstandsmonent	1892469.33	mm3
8		spannung	8.05	N/mm2
9		Schulter		
10		Torsion		
11		Monent	7620577.33	N*mm
12		Widerstandsmoment	1794000.00	mm3
13		Spannung	4.25	N/mm2
14				
15		Armlehne		
16		Biegemoment	7620577.33	Nmm
17		Widerstandsmoment	1001288.32	mm3
18		Spannung	7.61	N/mm2

< 135 N/mm2

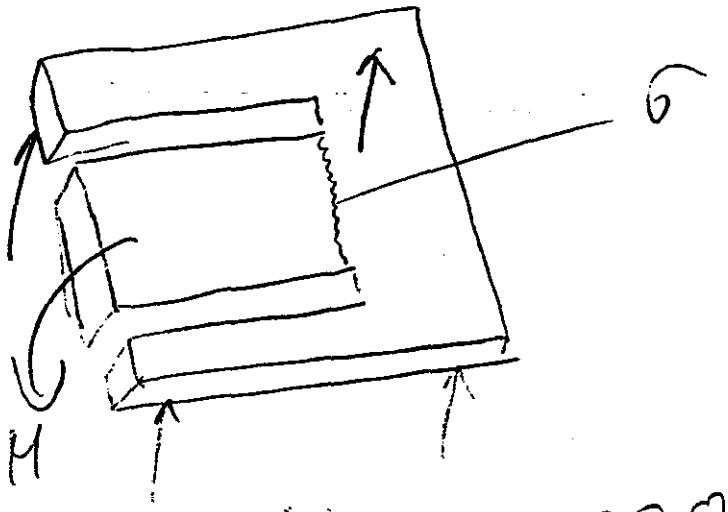

R70-000003

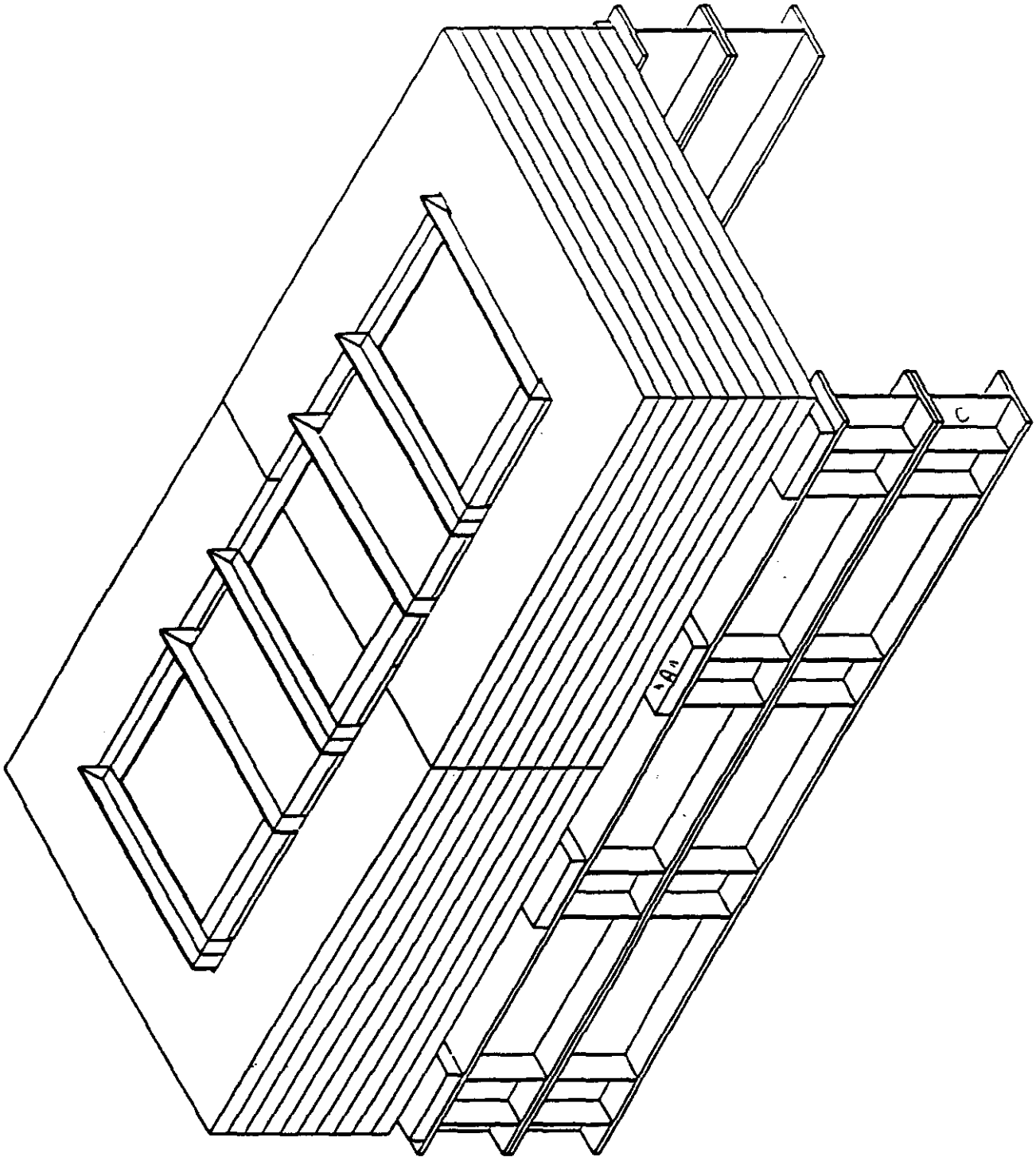
C
B

ENGINEERING NOTE

SUBJECT

NAME

DATE 12-20 31

REVISION DATE

$F = 1{,}1 \cdot 1 \cdot 1{,}23 \cdot 7{,}85 = 10{,}6\ t$

$F = 106210\ N$

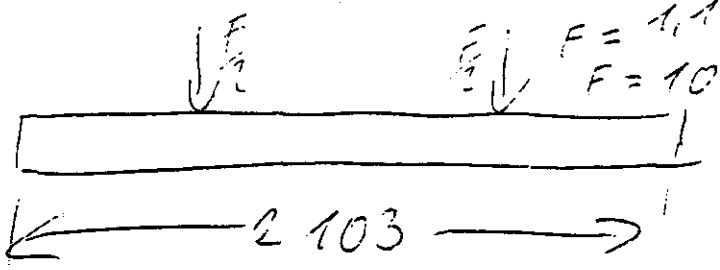

$$W = \frac{450 \cdot 18{,}9^2}{6}$$

$$W = 59240\ mm^3$$

$$M = \frac{106210}{2} \cdot 500 = 26552625$$

$$\sigma = \frac{M}{W} = 44{,}79\ \frac{N}{mm^2}$$

2

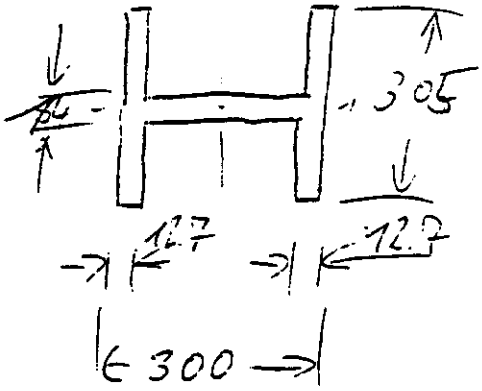

length = 533,4 mm

Load = 11,25 tonnes

Force = 112,500 N

$A = 300 \cdot 305 - 274.6 \cdot 291$

$A = 90934.4 \text{ mm}^2$

$$\sigma_D = \frac{112500}{90934.4} = 1,237 \text{ N/mm}^2 < 135 \frac{N}{mm^2}$$

Buckling safety :

$$J_1 = \frac{25.4 \cdot 305^3 + 274,6 \cdot 14^3}{12}$$

$$= 60\,118\,181 \text{ mm}^4$$

$$J_2 = \frac{305 \cdot 300^3 - 291 \cdot 274.6^3}{12}$$

$$= 184\,123\,265 \text{ mm}^4$$

$$F_K = \frac{3.14^2 \cdot 210000 \cdot 60\,118\,181}{533.4^2}$$

$F_K = 447500348$ N $\quad S_K = 3987 > 10$

URA/SSCL, 2550 Beckleymeade Ave., Dallas, Texas 75237

		Sheet 1	Of
Project	MUNON & TEXAS TEST RIG	Date	
		Job No #	
Description	RIG LOAD CAPACITY	By G.TULK	Dept. Appr.

URA/SSCL, 2550 Becklevmeade Ave., Dallas, Texas 75237

Sheet 2 Of

Project MUNON & TEXAS TEST RIG

Date 6-2-92

Job No 92001

Description ASSUMPTIONS & REFERENCES

By G.TULK Dept. Appr.

DRAWING REFERENCES

MUON TEST RIG DRWG # R70-000004 SHT 1-4

TEXAS TEST RIG SUPPORT DRWG # R70-000002 SHT 1

CODE & REFERENCES

1 AISC 9TH EDITION

2 UCRL 15910

3 UBC 1991

4 ANSI A58.1 1982

5 DOE 6430.1A

DESIGN LOADS

D.L.

MAGNETS:

L.L.

ASSUME 50PSF

WIND LOAD

INSIDE EXP.- ASSUME 10 PSF

SESMIC

ZONE 0 UBC

UCRL 15910

MEMORANDUM

TO: JEFF LANIER ms 6000

FROM: GARY W. TULK ms 2004 TEL 708-3006

SUBJECT: TELEPHONE CONVERSATION W/ JACK STEPHENS

CC: JACK STEPHENS
4949 WESTGROVE DR.SUITE 170
DALLAS, TEXAS 75248

DATE: 6/9/92

JEFF INDICATED THE TOTAL WEIGHT OF THE TEXAS TEST RIG USED IN DESIGN WAS 286,000 LBS.
DESIGN BEARING WALUE FOR THE GREY WEATHERED LIMESTONE IS 25,000 LBS./S.F.

PLEASE RESPOND IF THIS INFORMATION IS NOT CORRECT

ATTACHMENTS: GT/GT

MEMORANDUM

TO: JEFF LANIER ms 6000

FROM: GARY W. TULK ms 2004 TEL 708-3006

SUBJECT: TELEPHONE CONVERSATION W/ JACK STEPHENS

CC: JACK STEPHENS
4949 WESTGROVE DR.SUITE 170
DALLAS, TEXAS 75248

DATE: 6/9/92

JEFF INDICATED THE TOTAL WEIGHT OF THE TEXAS TEST RIG USED IN DESIGN WAS 286,000 LBS.
DESIGN BEARING WALUE FOR THE GREY WEATHERED LIMESTONE IS 25,000 LBS./S.F.

PLEASE RESPOND IF THIS INFORMATION IS NOT CORRECT

ATTACHMENTS: GT/GT

From: Jeff Lanier (6/9/92)
To: Gary Tulk

Subject: Time:7:44 AM
OFFICE MEMO Gary Tulk Date:6/10/92

I got your memo on your conversation with Jack Stephens. The JTR is 130 Metric tons, which means that the weight factor should onle be 291,200 LBS. (130 Tons X 2240 LBS/Ton). If I can be of any further help, please contact me.

204

Jeff Lanier

MEMORANDUM

TO: JEFF LANIER ms 6000

FROM: GARY W. TULK ms 2004 TEL 708-3006
SUBJECT: TELEPHONE CONVERSATION W/ JACK STEPHENS
CC: JACK STEPHENS
4949 WESTGROVE DR.SUITE 170
DALLAS, TEXAS 75248
DATE: 6/5/92

JEFF INDICATED THE TOTAL WEIGHT OF THE TEXAS TEST RIG USED IN DESIGN WAS 386,000 LBS.
DESIGN BEARING VALUE FOR THE GREY WEATHERED LIMESTONE IS 25,000 LBS./S.F.

PLEASE RESPOND IF THIS INFORMATION IS NOT CORRECT.

ATTACHMENTS: GT/GT

URA/SSCL 2550 Becklevmeade Ave., Dallas, Texas 75237

Project [illegible]

Description [illegible]

Sheet 1 Of

Date [illegible]

Job No. [illegible]

By [illegible] Appr.

[illegible]

WAREHOUSE TEAM

TRAS RG WAY CALCULATIONS

BY [illegible] & BECKLEMEADE ASSOCIATES

STRUCTURAL CALCULATIONS

URA/SSCL 2550 Becklevmeade Ave., Dallas, Texas 75237

Project [illegible]

Description [illegible]

Sheet [illegible] Of

Date [illegible]

Job No. [illegible]

By [illegible] Appr.

THE [illegible] SEE

[illegible] TEST [illegible] DWG = 270-000004 [illegible]

TEST [illegible] SUPPORT 270-000002 [illegible]

CODE

1. ASME 9th EDITION
2. UBC 1991
3. UBC 1991
4. ANSI 55.1 1982
5. DOE 6430.1A

DESIGN LOADS

DL

[illegible]

L.L.

ASSUME 50 PSF

WIND

[illegible] EXPOSURE — ASSUME 10 PSF

SEISMIC

ZONE 0 [illegible]

[illegible]

URA/SSCL, 2550 Beckleymeade Ave., Dallas, Texas 75237

Project [illegible]

Description [illegible]

Sheet [illegible] Of

Date [illegible]

Job No. [illegible]

By [illegible] Dept. Appr.

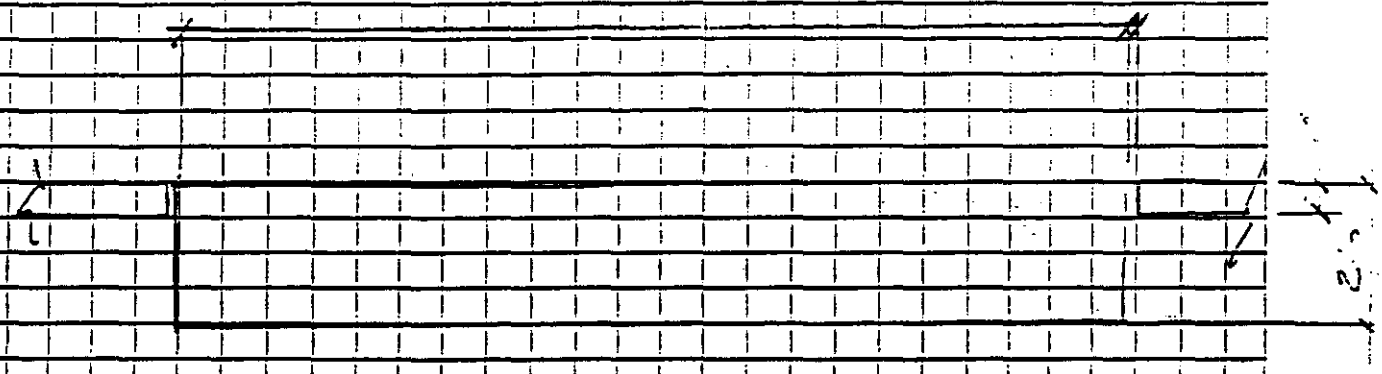

URA/SSCL, 2550 Beckleymeade Ave., Dallas, Texas 75237

Project: Nuclear Test Rig & Texas Test Rig	Sheet 4 Of
	Date 1-3-92
	Job No. 92-001
Description: TEXAS TEST RIG	By G.T. Dept. Appr.

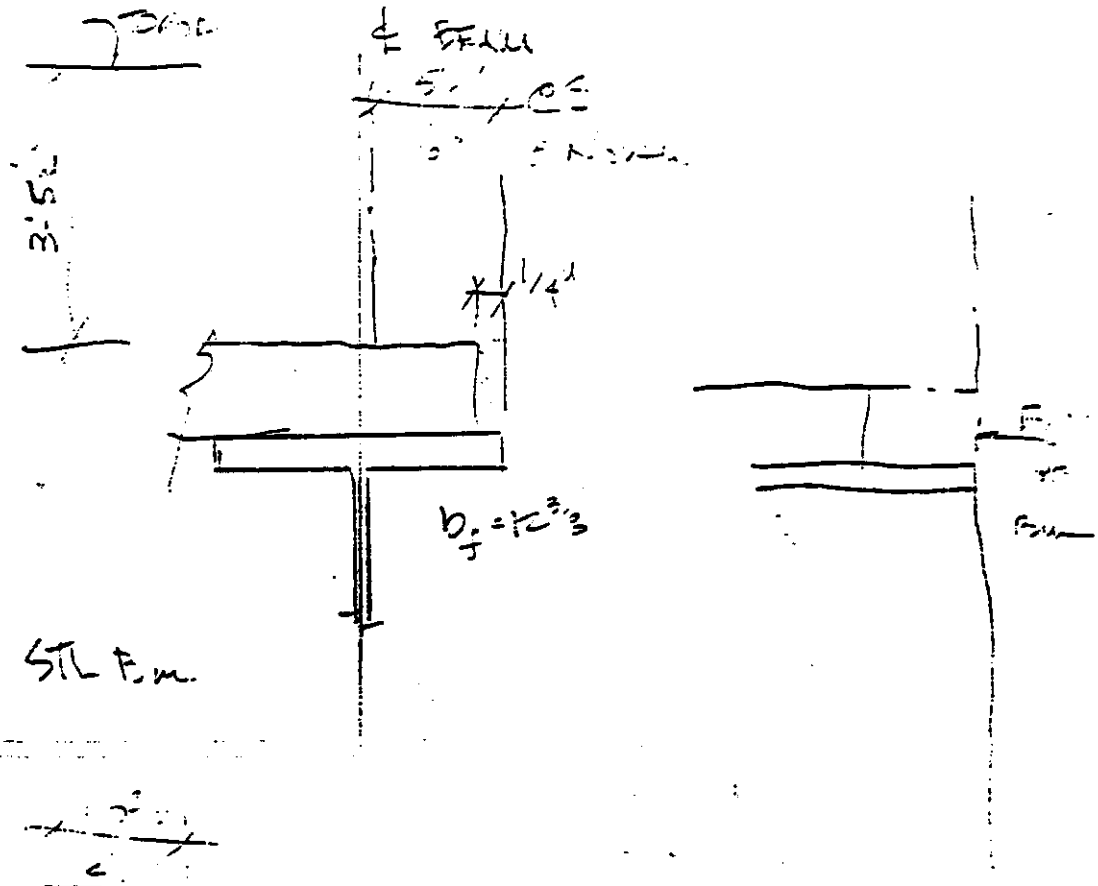

Length of Stl. 1/3 Stl. Fm.

2" Base ℄

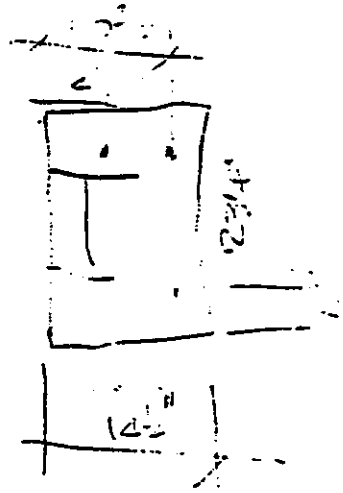

URA/SSCL, 2550 Beckleymeade Ave., Dallas, Texas 75237

Project: Mirror Test & Texas Test Rig	Sheet 5 Of
	Date 1-3-92
	Job No. 92-001
Description TEXAS TEST RIG	By G.T. Dept. Acor.

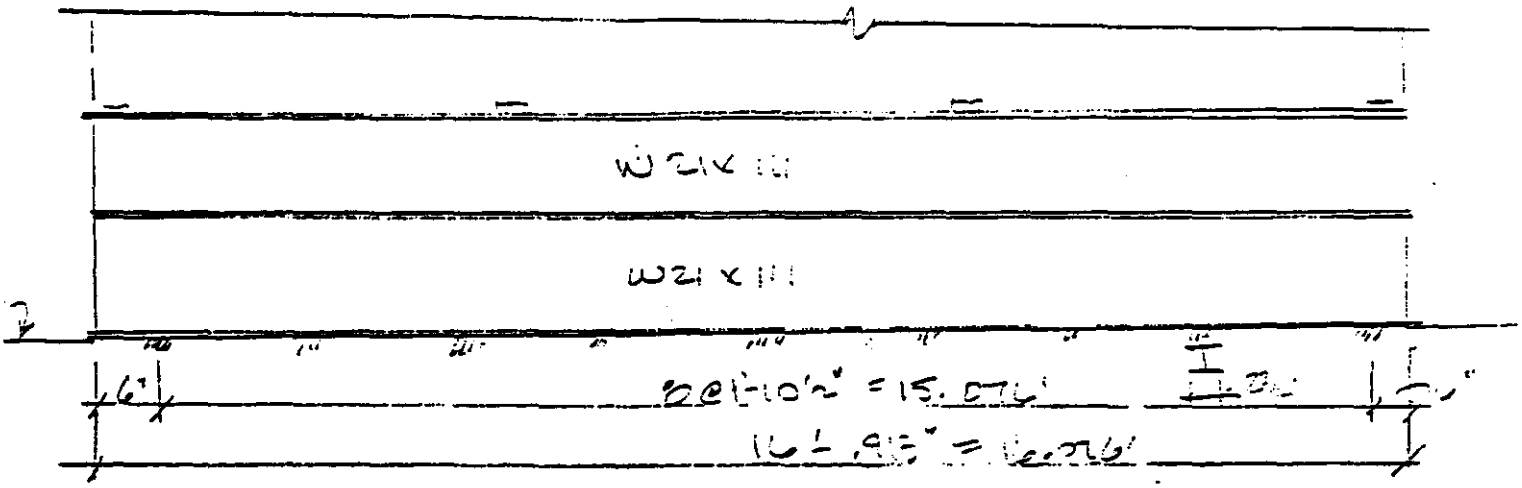

STEEL & WT = 490#/cu ft x 16.1' x 8' x 3.5' = 221# + .05 x 16.1 x 3 = 227

REACT (#/LF) = 227# / 2 x 16.1 + .222 = 7.272 #/FT

≈ 7.1# OK

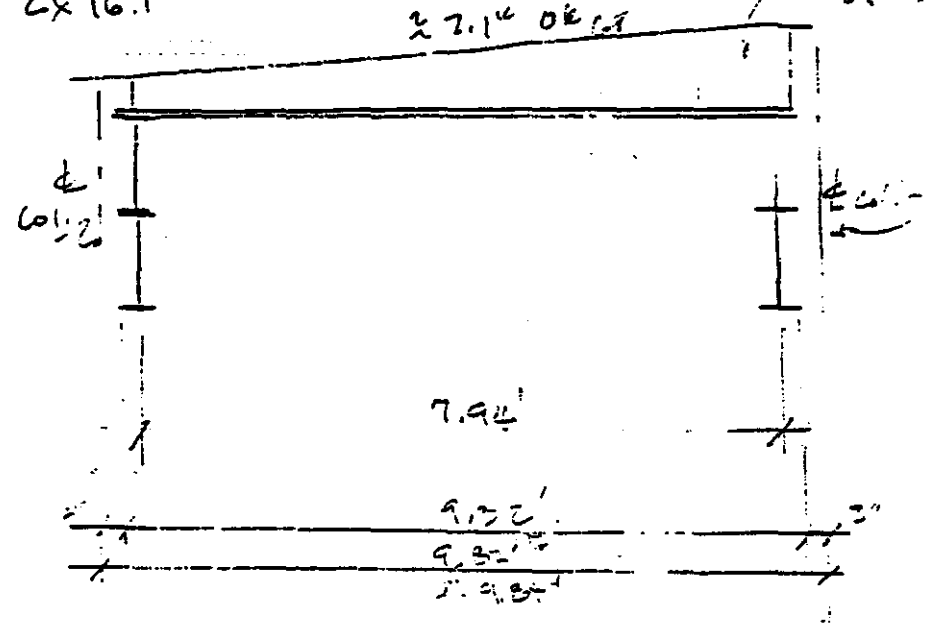

URA/SSCL, 2550 Beckleymeade Ave., Dallas, Texas 75237

Project: [illegible] TEST [illegible] & TEXAS TEST RIG

Sheet 6 of

Date [illegible]

Job No. 92-001

Description TEXAS TEST RIG FOUND.

By G.T. Dept. Acct.

ALL DIM. ARE FROM DWG.

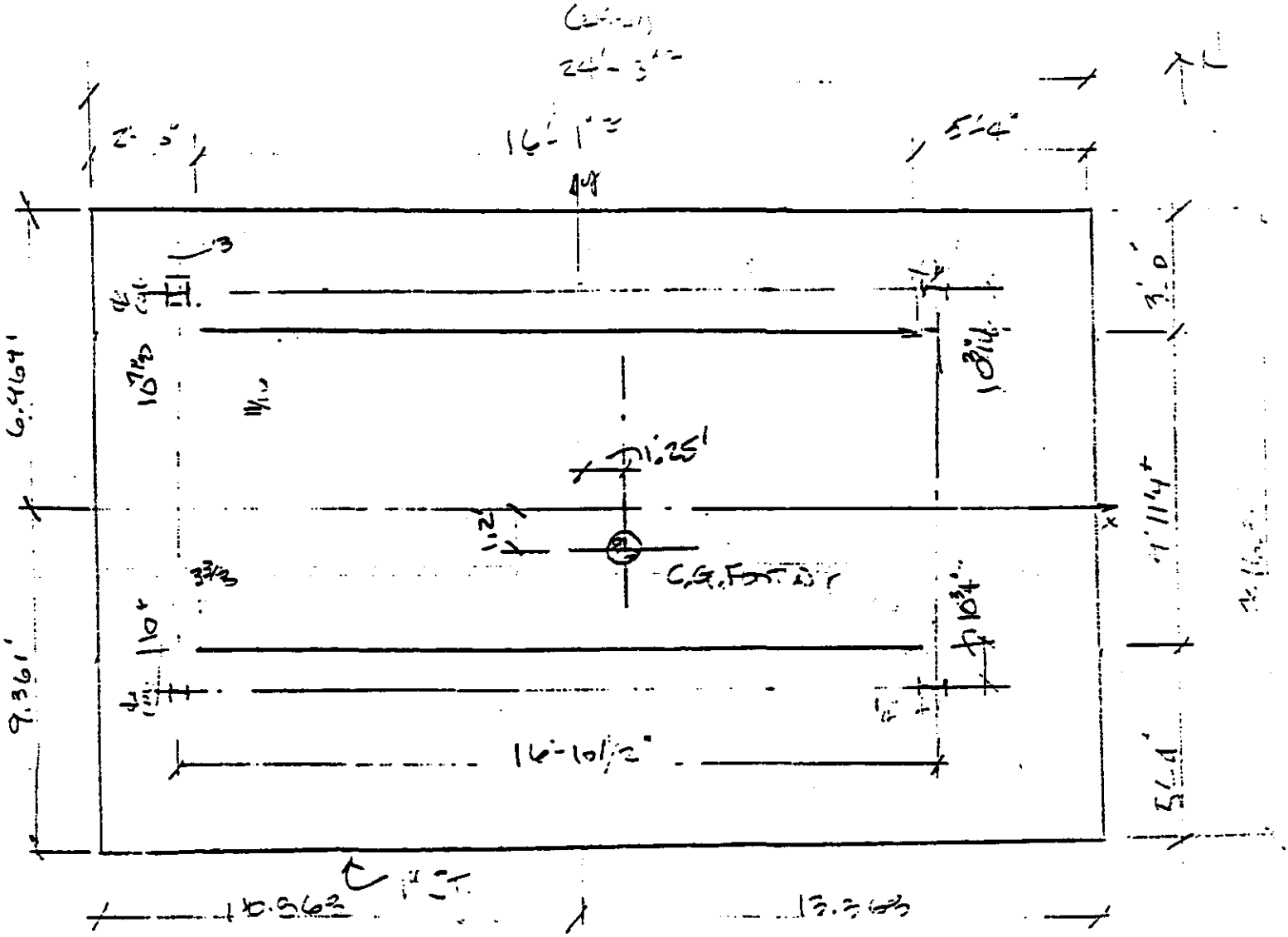

$A = 396^{\square'}$ $I_x = 1/12 ([illegible])^3 = 8,78[illegible]\ ft^4$

$I_y = [illegible]$

URA/SSCL 2550 Beckleymeade Ave., Dallas, Texas 75237

Sheet 1 Of
Project
Date
Job No.
Description
By GT Dept. Appr.

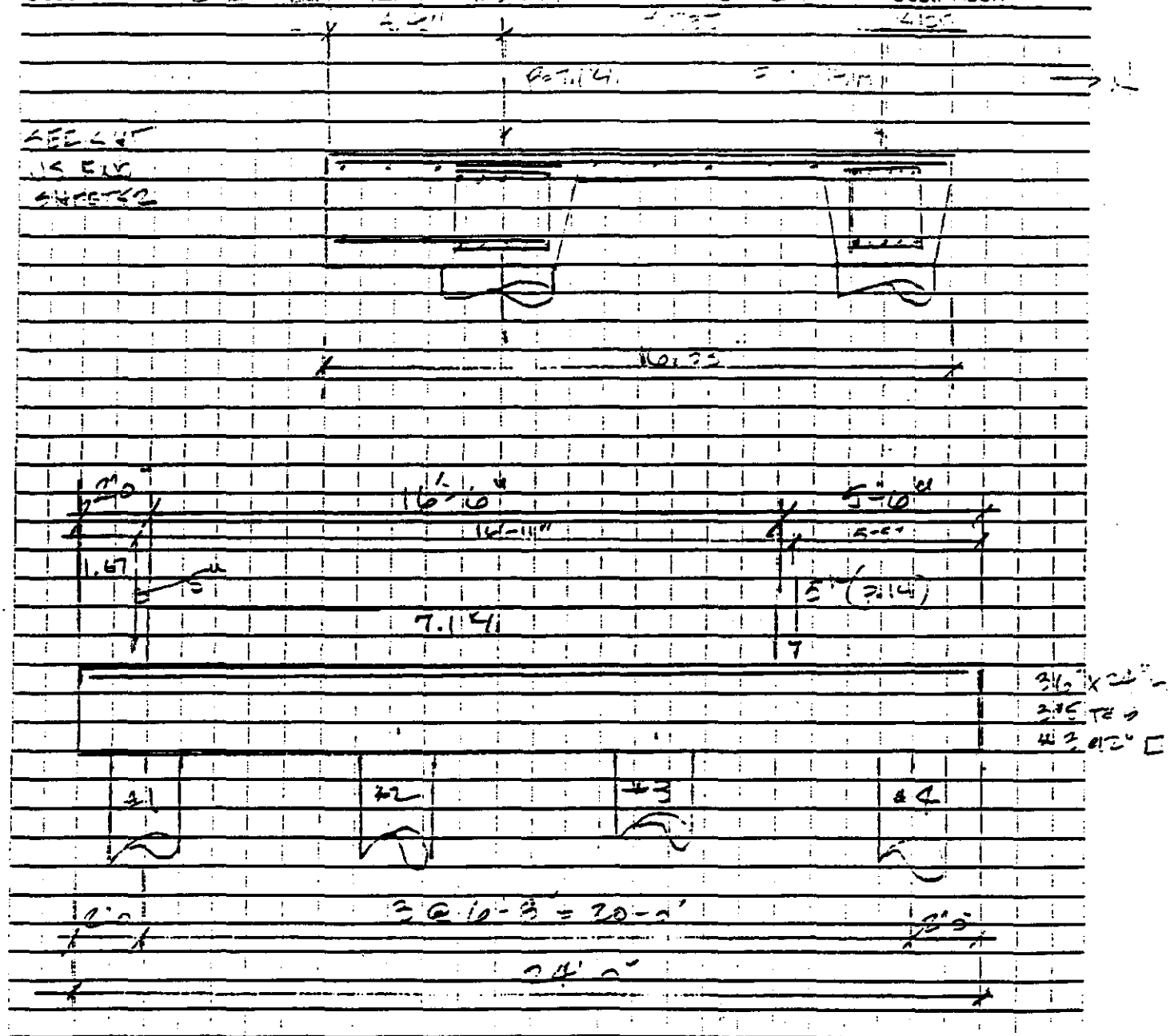

URA/SSCL 2550 Becklevmeade Ave., Dallas, Texas 75207

Sheet 8 of
Project [illegible]
Date [illegible]
Job No. [illegible]
Description [illegible]
By [illegible] Dept. Appr.

ENVELOPE (DOUBLE SCALE)

[illegible] = .52 [illegible] = .03 [illegible] × 6.67 = 25.2

[illegible] = [illegible] = .10 × 7.0 [illegible] = .55

V_{FW} = .16 × 7.0 × 6.67 = 23.8

DETERMINE BEAM CAPACITY FOR USD

[illegible] AT 12" = 3.75 [illegible]

A_s = 5 [illegible] = 1.55 in² d = 24 − 2 − .5 = 21.5

F = [illegible] / 21.5 = 1.37

[illegible] = 21.52 / 1.37 = 15.7 [illegible]

Actual: 24 / 1.70 × 1.5 = .35 [illegible] > 1.55 in² ok PROVIDED

V_c = .06 × 21.5 × 3/2 = 48.4 > 23.8 ok

LOADING ON PILE #2 (SEE SHT 7)

DIST. TO [illegible] = [illegible] × 7.0 × 6.67 = [illegible]

CONC. FOR [illegible] = [illegible] = 16.6

FOOTING [illegible] = 3.5 × 2 × 1.1 × 6.67 × .15 = 7.7

24" ⊙ PILE + [illegible] 6.3/2 = 21.1 [illegible] < 25 [illegible] ALLOW

[illegible]

URA/SSCL, 2550 Beckleymeade Ave., Dallas, Texas 75237

Project: MOODTEST & TEXAS TEST RIG

Sheet 9 of

Date [illegible]

Job No. [illegible]

Description

By [illegible] Dept. Appr.

DETERMINE LIVE LOAD (EDDIE) FROM [illegible]

[illegible] MATERIALS (FRANK [illegible]

[illegible] = [illegible] PLANK DENS = [illegible] x 10.0

LOADS (LL)

TOP LEVEL 1163 LVS = 820

LEVEL 1-5 5 x 820 = 4100

LL TOTAL = 4920#

L.L 4kl 5000#

URA/SSCL, 2550 Beckleymeade Ave., Dallas, Texas 75237

Project: Nissan Test Rig & Texas Test Rig	Sheet: Of
	Date 1-3-92
	Job No. 92-001
Description TEXAS TEST RIG	By G.T. Dept. Appr.

DISCUSSION w/ GENE MITSELMAKER

1200 Kg.

.453 lb = 1 kg

lb = 2.2 kg

150 Kg TOP 150

300 kg 4 - 1200

100 kg 1 - 100

1450 kg

1450 kg x .453 lb/kg

= 660 lb

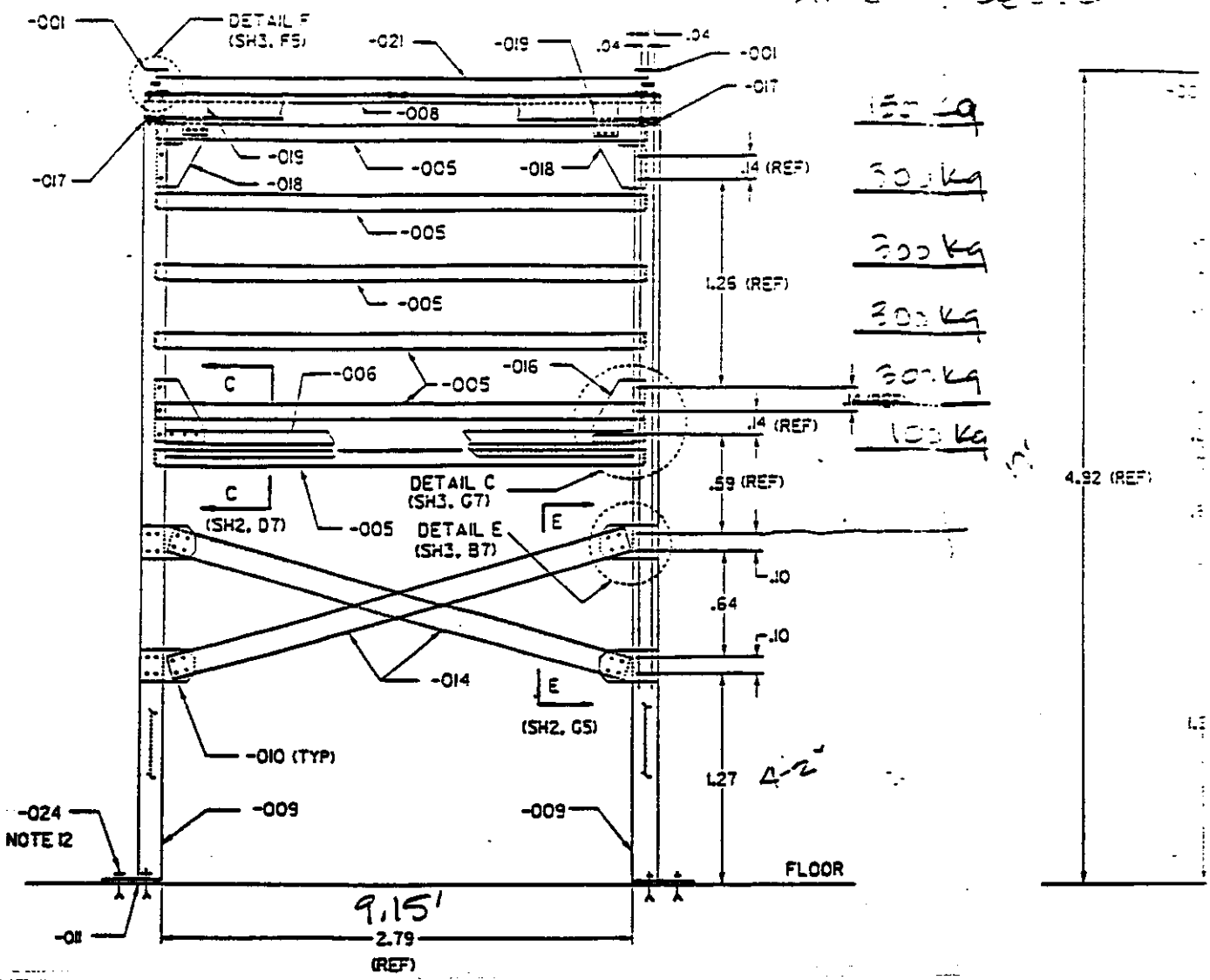

9.15'

NOTE: LOAD AT EAC
PLACED ON AN AR
2.8M x 5.15M
ALSO INCLUDE

FRONT ELEVATION

8 7 6

FOR DESIGN OF

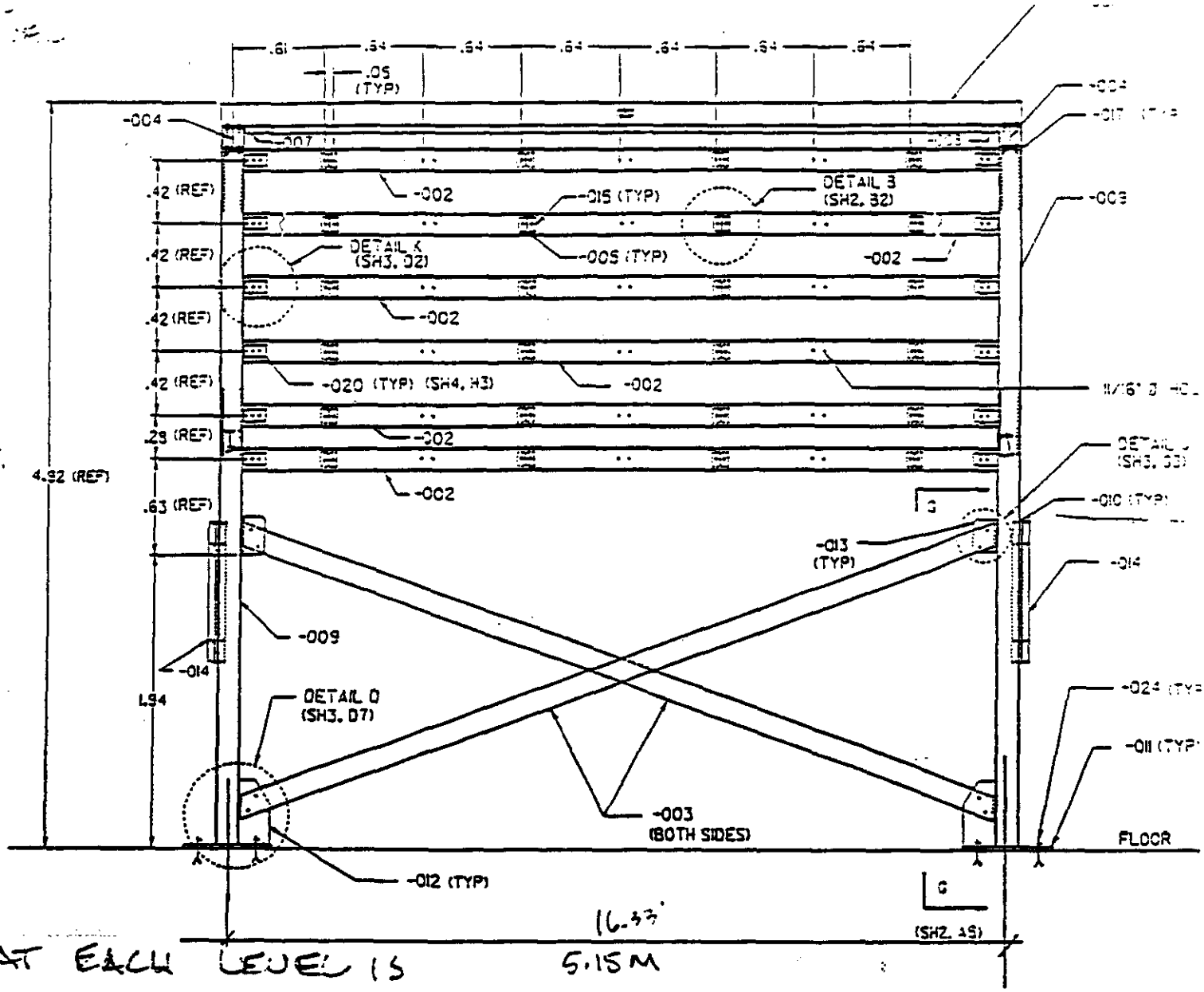

16.33'

AT EACH LEVEL IS 5.15 M

AN AREA OF APPROX

.15 M

SIDE ELEVATION

INCLUDE MISC. ELECT. CABLE TRAYS
MISC. LIGHT GA. DUCT) ASSUME 5# / ft²

5 | 5 | 4 | 1

SIGN OF STRUCTURE USE 800# / LEVEL

TOTAL LOAD
EACH LEVEL

150 kg
300 kg
300 kg
300 kg
300 kg
100 kg

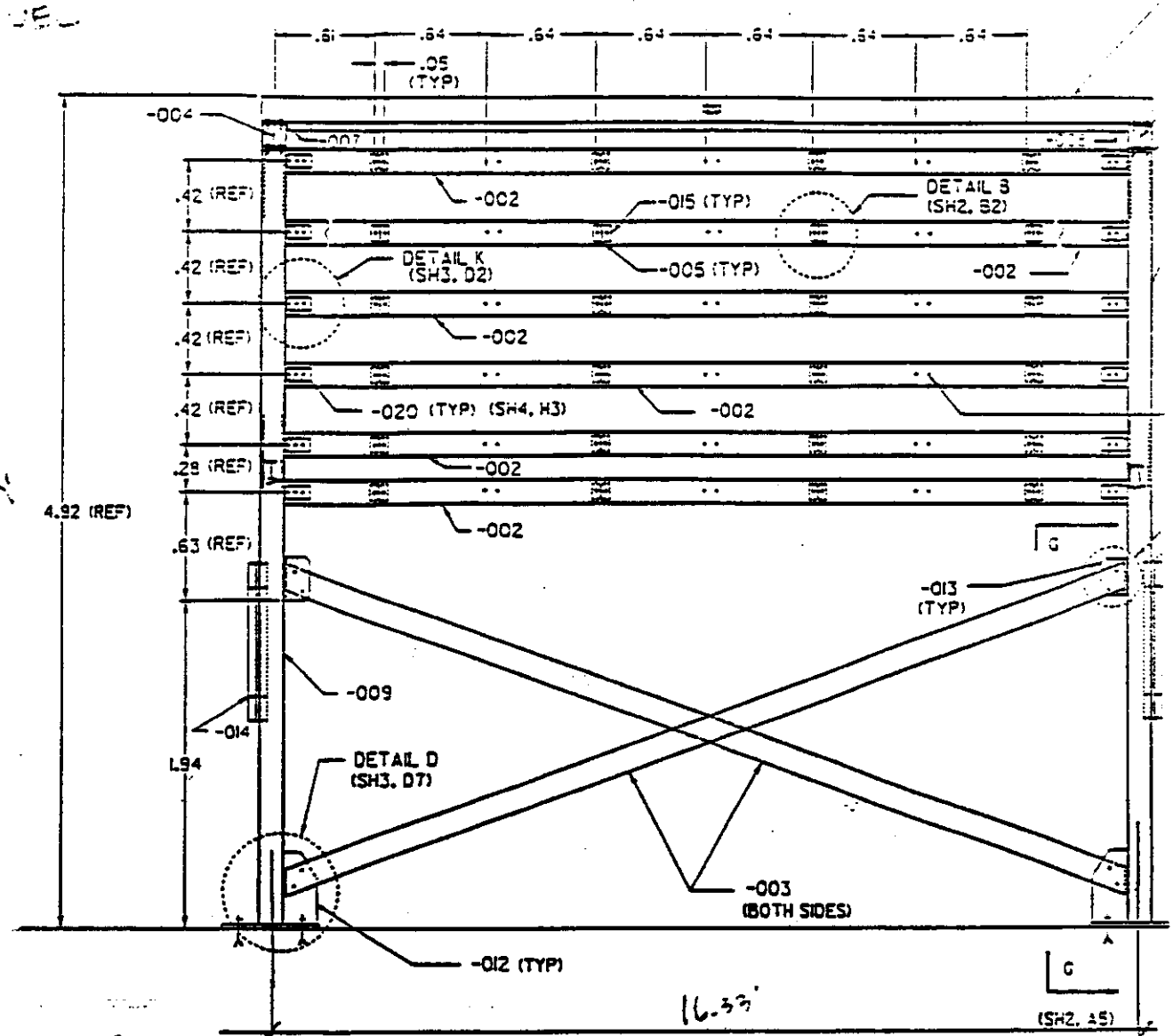

16.33'
5.15 M

LOAD AT EACH LEVEL IS
LED ON AN AREA OF APPROX
M X 5.15 M

SIDE ELEVATION

ALSO INCLUDE MISC. ELECT. CABLE TRAYS
MISC. LIGHT GA. DUCT) ASSUME 5#

6 | 5 | 4

OR DESIGN OF STRUCTURE USE 800#/LEVEL

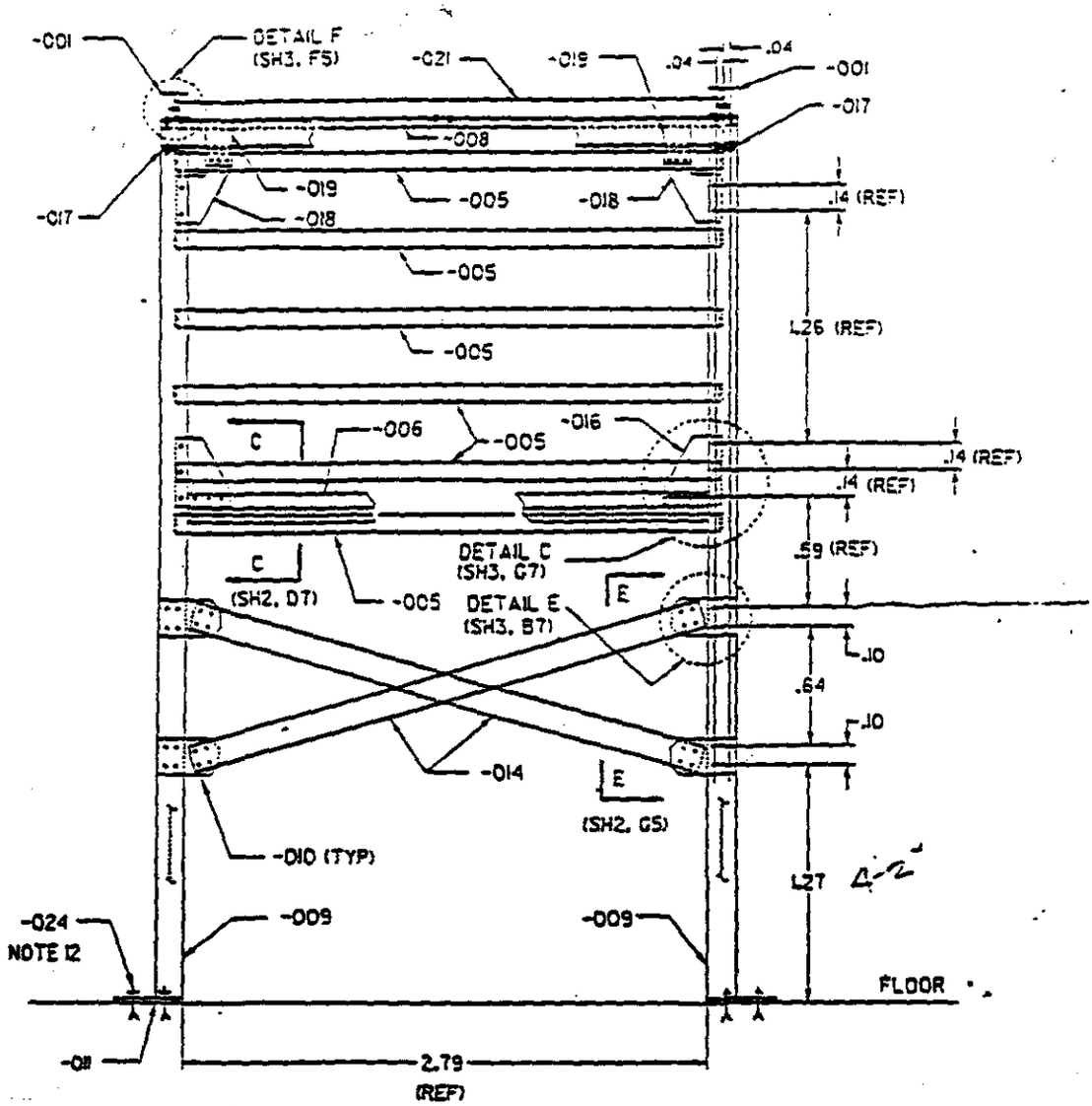

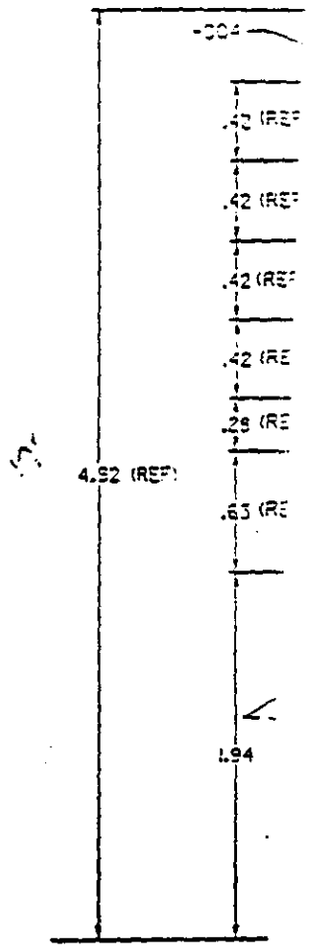

FRONT ELEVATION

8 7 6

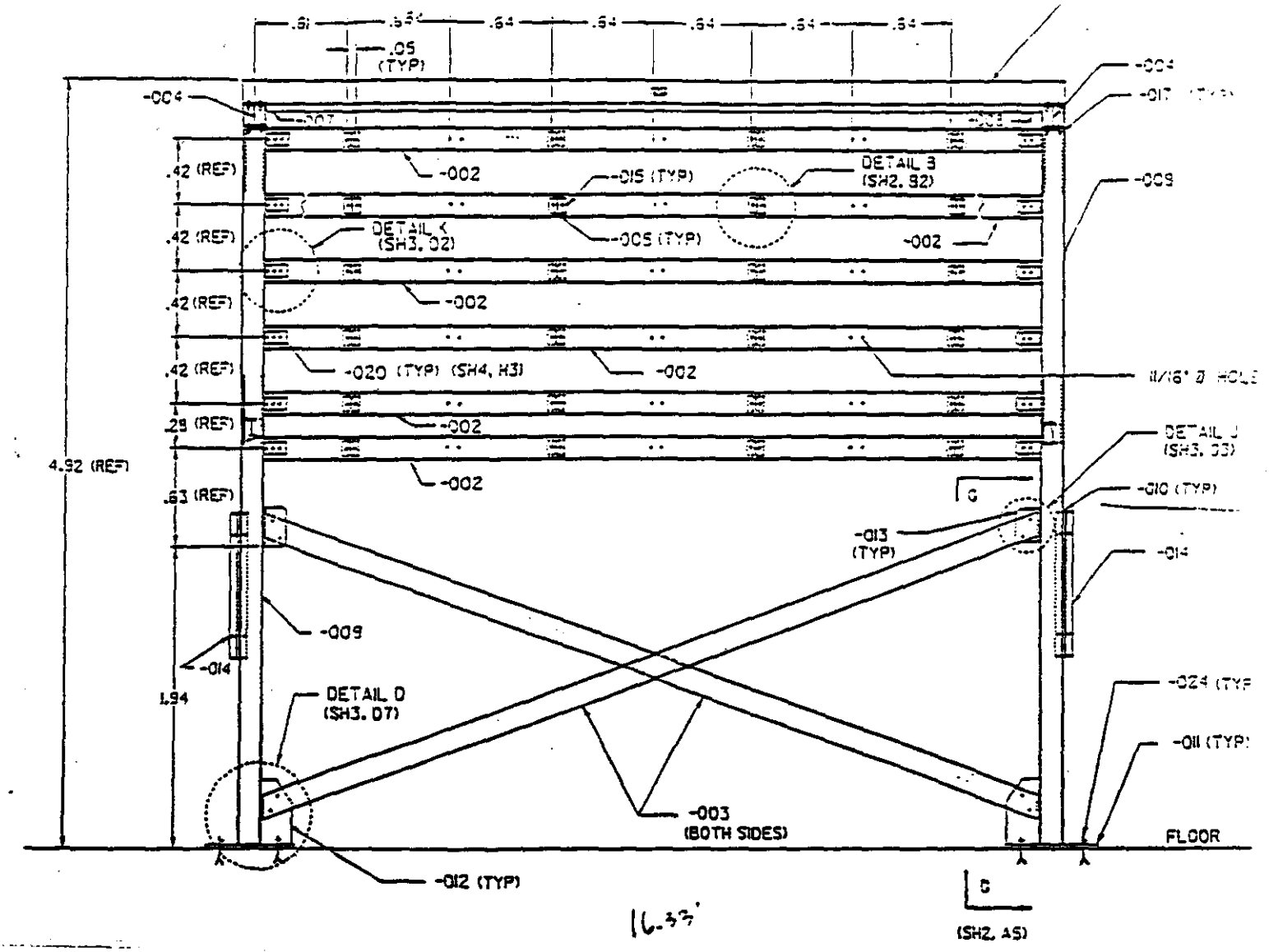

SIDE ELEVATION

UPA/SSCL, 2550 Becklevmeade Ave., Dallas, Texas 75237

Project: [illegible]

Sheet [illegible] Of

Date [illegible]

Job No. [illegible]

Description [illegible]

By [illegible] Dept. Appr.

[illegible]		
[illegible]		620.
[illegible]	5'1 x 2 x 117' =	2 [illegible]
SIDE CHANNEL	9' x 4 x 105' =	6500.
END CHANNEL	5' x 4 x 115' =	2700.
END END	15 x 3 x 2 x 10' =	600.
INTERMS	13 x 6 x 4 x 115 =	3120.
Channel Top	9 x 19' x 4 =	7100.
COL.	15 x 17' x 4 =	10200.
[illegible]		2000.
MISC. ITEMS FOR REST.		2000.
LINE HOOD	(P.9)	[illegible]
	TOTAL MAT'L	
	MINUS THAT ALREADY	= [illegible]
	USE THIS	

URA/SSCL, 2550 Beckleymeade Ave., Dallas, Texas 75237

Project MODULE E6 — Sheet [illegible] Of [illegible]
Date [illegible]
Job No. [illegible]
Description STRUCTURE ANALYSIS — By GT — Dept. Appr.

STAN ANALYSIS (FEA ASC)

MARK 035 (CONTROL DRAWER)

W 4x13 (LATERAL SHELF SUPPORT)

$A = 3.83\ in^2$ $r_x = 1.10\ in$ $S/A = 2.97$ $I_x = 11.3\ in^4$

$S_x = 5.46\ in^3$

$r_y = 1.91$

$r_y = 1.0\ in$

$L_{EFFECTIVE} = 9.65' = 116''$

$F_b = \frac{12000}{116 \times 2.97} = 34.9 > 21.6\ ksi$

$M_{cap} = 21.6 \times 5.46 = 9.828$ (K-1) $\quad$ $DWF\ (\omega) = \frac{6 \times 9.828}{9.65^2} = .8\ k/ft =$

Check Dw $\frac{9.828\ vd}{9.65} = 4.05^k$

Max Dl (w) = 10 psf / ft = $\frac{6\ \#/ft}{4} = 2.5\ k/ft$

URA/SSCL, 2550 Beckleymeade Ave., Dallas, Texas 75237

Project: [illegible]

Description: [illegible]

Sheet: [illegible] Of

Date: [illegible]

Job No.: [illegible]

By: [illegible] Dept. Appr.

BEAM HALF CSS (CONTROL [illegible])

W6x15 (HORIZONTAL SUPPORT)

$A = 4.431 \text{ in}^2$ $r = 1.61$ $d/A_p = 3.85$ $I_x = 29.1 \text{ in}^4$

$S_x = 9.72 \text{ in}^3$ $Z_y = 3.11$

Length of member $= 16.33' = 196''$

$r_y = 1.46 \text{ in.}$

$F_b = \frac{12000}{196 \times 3.85} = 15.9 \text{ ksi}$

$M_{cap} = \frac{15.9 \times 9.72}{12} = 12.93 \text{ k'}$

$UNF = \frac{8 \times 12.93}{16.33^2}$

$W = 3.96 \text{ k/ft}$

$P_{UNIF} = \frac{12.93 \times 8}{16.33}$

$P = 3.16^k$

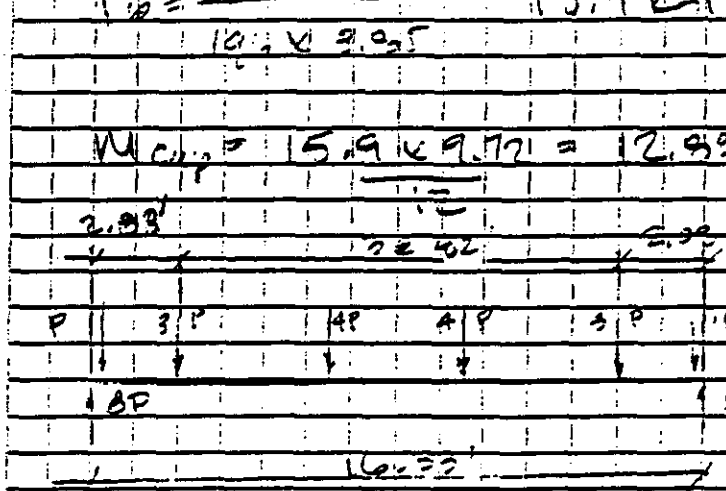

$M = 8.17' \times 8P - 8.17 \times P - 6.83' \times 3P - 1.83' \times 4P$

$= 31.33P = 12.93^k$

$P = 4.13^k$ $3P = 12.39^k$ $4P = 16.52^k$

$8P = 33.0^k$

$M_{max} = 410 \text{ ft-k}$

$M_{max}/S_x = \frac{16}{2} \times \frac{1}{4} = 5.0$

URA/SSCL, 2550 Beckleymeade Ave., Dallas, Texas 75237

Project: Main Tow Rig — Sheet 14 Of — Date 6-5-92

Description: Col. Reaction on Found — Job No. 92-021 — By C.T. — Dept. Appr.

For Set 4 Pcol = 13k / 4 = 5k

Seen to set 7.

Loads on Pier #1

Due to Texas Rig = 0.4 x 1.035 x 6.67 = 1.9k

Cone Beam 3' x 2 x .15 x .4 x 6.67 = 2.4k

Exclude 3' Cone. 3.6 x 2 x .4 x 6.67 x .15 = 2.3k

Col. Reaction = 5.0k

Tr = 24.2k

Tp = 24.2k / 2.14 = 9.3KSF < 25KSF OK

Loads on Pier #3

Due to Pier #2 Dead Col. Rx

Dead 16.3k

Live 5.0k

Tr = 21.3k / 2.14 = 22.7KSF < 25KSF 71.3k

OK

URA SSCL 2550 Beckleymeade Ave., Dallas, Texas 75237

Project: MUON TEST [illegible]
Description: [illegible]

Sheet 15 Of
Date [illegible]
Job No. [illegible]
By [illegible] Dept. Appr.

DIER #4

OL [illegible] OBSERVATION [illegible]

ASSUME FORK LIFT ON SOUTH SIDE AT 4.47' FROM EXTERIOR

PER #2 CAPACITY = (25 - 2.44) 5.14 = 12.25

ASSUME LOW CONTRACTOR LOAD AT EDGE

12.25 = P (9.73 - 4.47) / 9.73 DL 8.4

CHECK FOR TERMINAL MOM DUE TO 8.4

M = 8.4 x 3.27' = 28.2 — WIDTH = 3'

[illegible] 28.2 / [illegible] 0.75 [illegible] 2 x 3.27 = [illegible]

ASSUME 6" WIDTH A = [illegible] MOM = 70.3 PC 70

MAX FORK LIFT WAIVER = 15

URA/SSCL 2550 Beckleymeade Ave., Dallas, Texas 75237

Project: MUON TEST RIG

Sheet: 16 of

Date: [illegible]

Job No.: [illegible]

Description: LATERAL LOAD

By: [illegible] Dept. Appr.

LOAD ANALYSIS

1. LATERAL LOAD GOES TO ANCHORING BOLTS (USING CHECK CALC)

2. VERTICAL LOADING WILL BE 18' OF LATERAL LOAD ABOUT MIDSPAN

3. ASSUME PL. FRAME IS BRACED & TOP IS FIXED AGAINST ROTATION ∴ K = 2.0

LOAD ON COL

W = 9.0' × 2.0 = 90 "/FT

MAX COL = ΔF = 1K

16.2'

7.4'

7.4'

4.5'

7.4'

4.17

28

URA/SSCL, 2550 Beckleymeade Ave., Dallas, Texas 75237

Project: [illegible] Test Rig

Sheet: 17 Of

Date: [illegible]

Job No.: [illegible]

Description: Lateral Load

By: [illegible] Dept. Appr.

[illegible] = 5" + 1 = 6" = [illegible]

= 2.75" = [illegible]

A36

UNL. IN 6 WKS A = 443 in² W/A = 3.65 I_x = 29.1 in⁴

S_x = 9.72 in³ r_y = 3.11

r_x = 1.46 in

$\frac{Kl}{r} \leq 200$

$\frac{2.0 \times l \times 12}{1.46} < 200$ $l \leq 12.16$' > 6.97' OK

$\frac{Kl}{r} = \frac{2.0 \times 6.92 \times 12}{1.46} = 114$ $F_a' = 11.13$ KSI

$F_a = \frac{1.35}{4.43 \text{ in}^2} = 11.35$ KSI

$f_b = \frac{3.2 \times 12}{9.11} = 12.35$ $F_{bx} = \frac{1.20 \times 36}{1.20 \times 2 \times 3.96} = 2.18$

$f_a / F_a = 1.35 / 11.13 = .121$

$.121 + 12.35 / 27 = 1.00$

$.572 < 1.0$ OK

$V = \frac{440^{\#} \times 6.0'}{16.7'} = 260^{\#}$

$M_{col} = 260^{\#} \times 22' =$

$M = 5.7$ [illegible]

URA/SSCL 2550 Beckleymeade Ave., Dallas, Texas 75237

Project MUON [illegible]

Description BASE PL CHECK

Sheet 13 of [illegible]
Date [illegible]
Job No. [illegible]
By [illegible] Dect. Appr.

$P_{max} = 10^{k}$ $P_{max} = \frac{[illegible] \times 0.5 \times 12.2}{12} = [illegible]^{k}$

$P_{[illegible]} = [illegible]^{k}$

ALLOWABLE BEARING = .35 x 6 - 2000 14½

A> 7100/2100 = 3.38

USE PL 3/4

URA/SSCL, 2550 Beckleymeade Ave., Dallas, Texas 75237

Project: MUON TEST [illegible]

Description: STRUCT. ANALYSIS

Sheet 10 Of

Date [illegible]

Job No. 92-[illegible]

By [illegible] Dept. Appr.

[illegible]

[illegible]

MAIN DIR

[illegible] = 140#

$M_{max} = \frac{14 \times 20^2}{8} = 1050'^{\#}$ $f_{bu} = \frac{1050 \times 12}{1.2} = 10,500$ psi

VERY SMALL

MAIN DIR

[illegible] = 140# × 1.37% = [illegible]

$M_{max} = \frac{14 \times 16.93^2}{8} = 467'^{\#}$ $f_{bu} = \frac{467 \times 12}{2.1} = 2670$ psi

VERY SMALL

TOTAL LOAD ON BEAM NOT CONSIDERED.

URA/SSCL 2550 Beckleymeade Ave., Dallas, Texas 75237

Sheet 20 of
Project [illegible]
Date 6-[illegible]
Job No. [illegible]
Description SEISMIC
By G.T. Dept. Appr.

DCU - 1590 [illegible]

$V = \frac{E}{[illegible]} W$ $C = \frac{1.25 \times 1.5}{[illegible]} (T - [illegible]) [illegible]$

$Z = 0.08$ (FANTEK PLANT)

$I = 1.0$ $R_w = 6$ SURF

$V = \frac{0.08 \times 1.0 \times 275 W}{6}$

$= 0.037 W$

TEVAC TEST VALVE

$V = 0.037 \times 23 = 0.51$

$.25 \times 23 = 1.5$

MILDAN TEST VALVE

$V = 0.037 \times (3 \times 4) = .44$

[illegible] 1560 [illegible]

LATCH [illegible]

URA/SSCL, 2550 Beckleymeade Ave., Dallas, Texas 75237

Project [illegible]

Description [illegible]

Sheet [illegible] Of

Date [illegible]

Job No. [illegible]

By [illegible] Dept. Appr.

WEIRS OF W21 TO FIND ENERGY

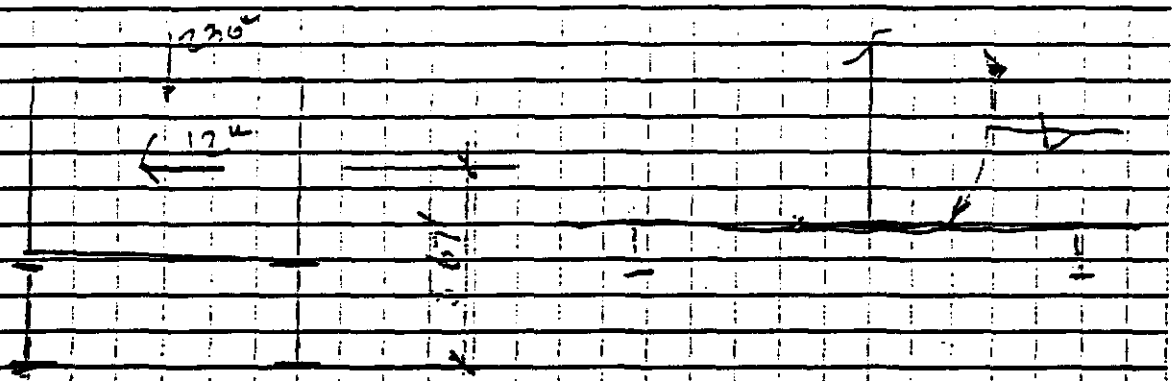

V = 12" (BILLFLOW/BM TO FLOW

[illegible] = [illegible] OK

V = [illegible] = [illegible] (WEIR)

[illegible] = 333" / 2.75 = 121"/W

[illegible]

[illegible] = 1220 [illegible] = [illegible]

V = 12" OK

URA/SSCL, 2550 Beckleymeade Ave., Dallas, Texas 75237

Project MUON TEST RIG

Sheet 22 Of

Date [illegible]

Job No. [illegible]

Description BEAM CONNECTING

By [illegible] Dept. Appr.

BM 005 TO 002

2-5" A325 BOLTS V = 2 x 5.4 = 10.8

2 6 x 3 x 2 V = 3.15" x .5 x [illegible] = 22.5 [illegible]

Gary Tulk.

6-4-92

Gary,

Attached is a copy of the foundation design for the TTR.

There are eight 24" piers to a depth range of approximately 15'1" to 17'9". Each penetrates blue shale 2'0".

Concrete that was used was 6000 PSI 7 1/4 sack mix high early strength. Beams and rebar sizes are shown.

Hope this helps

Jeff Lanier 6923

Jeff Lanier TK Piers is 130 metric tons = 130 x 2205
= 286.7 k

TTR FOUNDATION
AT
GEM TEST LAB
STONERIDGE BUILDING #4
DALLAS, TEXAS

JACK STEPHENS JR.
41671
REGISTERED PROFESSIONAL ENGINEER
10 FEB 92

92.5.32 10 FEB 92

JACK STEPHENS ENGINEERING, INC.
STRUCTURAL ENGINEERS
4949 WESTGROVE DRIVE SUITE 170
DALLAS, TEXAS 75248 214/[illegible]-1717

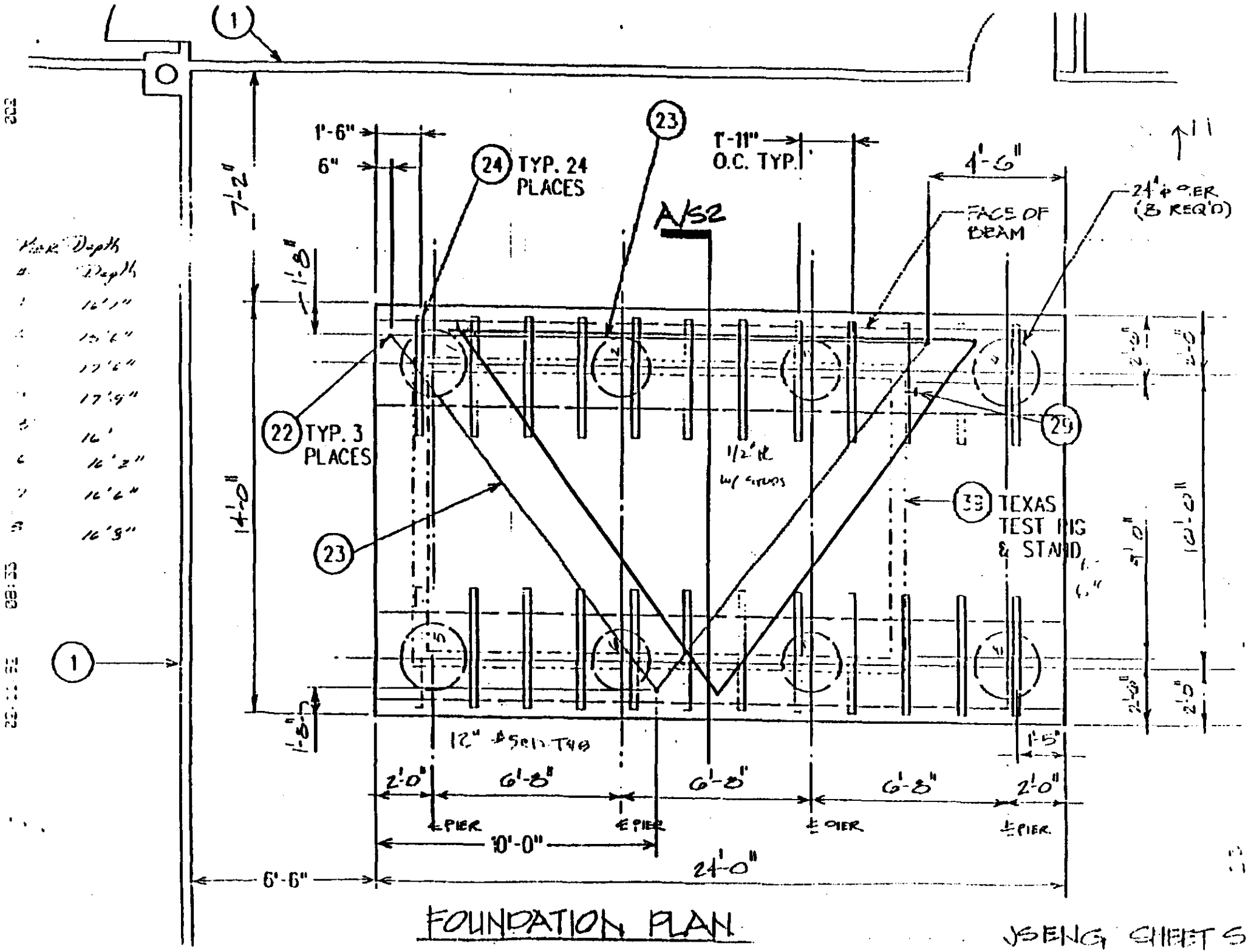

FOUNDATION PLAN

JSENG SHEET 5

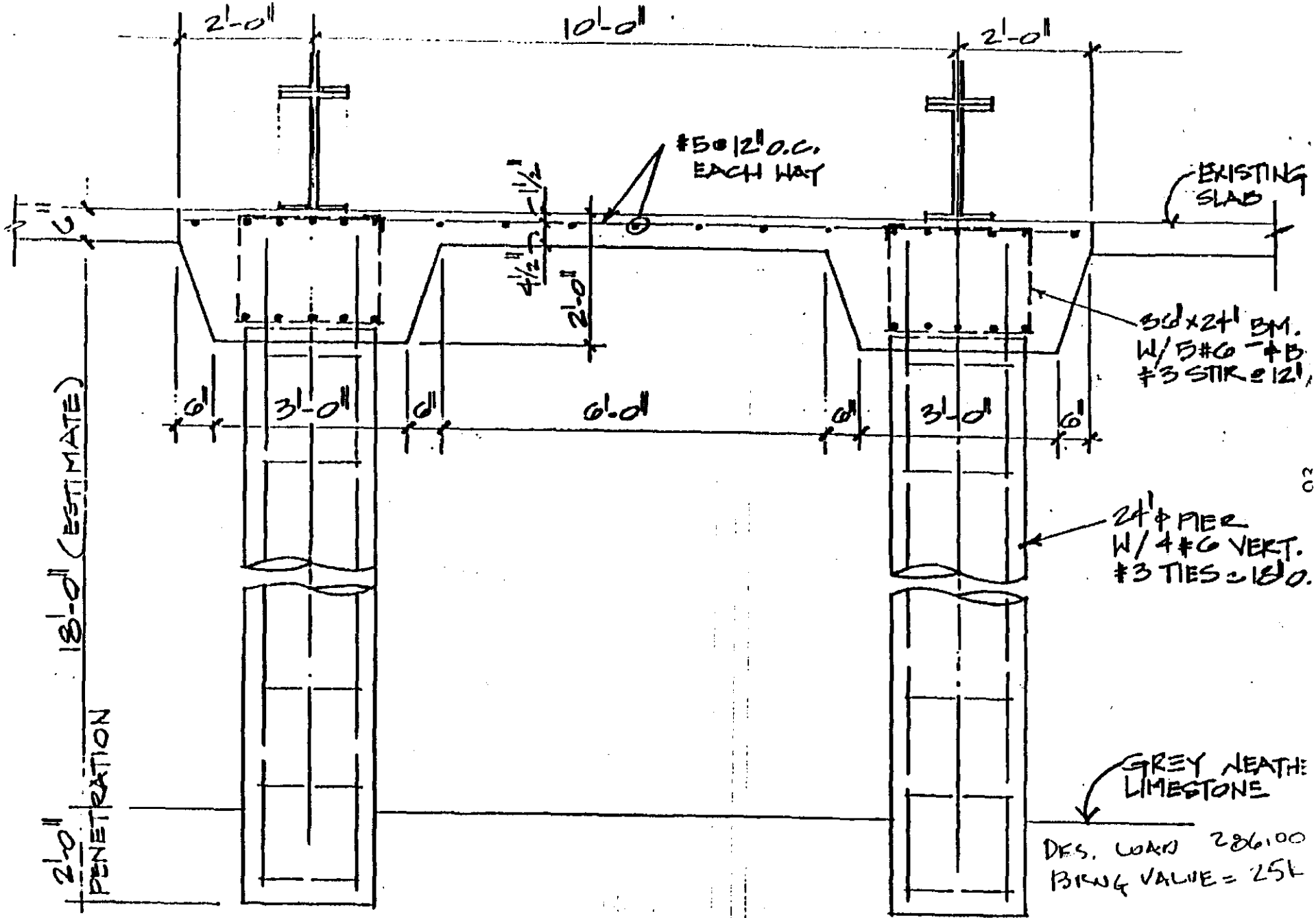
2'-0"
10'-0"
2'-0"
#5 @ 12" O.C.
EACH WAY
1½"
4½"
2'-0"
EXISTING SLAB
30"x24" BM.
W/ 5#6 - #8
#3 STIR @ 12"
6"
3'-0"
6"
6'-0"
6"
3'-0"
6"
24" ϕ PIER
W/ 4#6 VERT.
#3 TIES @ 18" O.
18'-0" (ESTIMATE)
2'-0" PENETRATION
GREY HEATHE
LIMESTONE
DES. LOAD 286,100
BRNG VALUE = 25K
FROM JACK STEWART &
Telephone 6-4-
SECTION "A"
JB ENG SHEE

URA/SSCL, 2550 Becklevmeade Ave., Dallas, Texas 75237

Project Mirror & Texas Test Rig

Sheet 29 Of

Date 6-3-

Job No.

Description Verify LN2 20psi

By GT Dept. Appr.

P.18 FIGURE 14 OF EL OPERATIONAL

LN2 CAPACITY IS > 20psi

URA/SSCL, 2550 Beckleymeade Ave., Dallas, Texas 75237

Project: MUON & TEAM TEST RING — Sheet 28 Of — Date 6-2-92 — Job No. 92-001

Description: VERIFY LL = 20 PPM — By GT — Dept. Appr.

(SEE SHT 9 FOR LL = 50 PPM MID. KFOD)

LL = 20 ppm L = 116.33' KFOD = 116.3'

LL = 10 × 116.3' × .02 = 20 TOT
5 mil

MUON TEST (SEE p. 11)

Σ D.L = 32.84" Span 32" OK 8"/COL.

p. 12 WS ≤ 211 pF > 20 pF OK

p. 13 WS ≤ 82 pF > 20 pF OK

PIER #1 — OK BY OBSERVATION p. 10

PIER #3 — OK BY OBSERVATION p. 14

PIER #4 — OK BY OBSERVATION p. 15

p. 17

R = 9" (Lo.) f₀ = 2.05 Hz f/Fn = .103

OK BY OBSERVATION

SLAB WIDE SHOWN ON FOUND. PLAN IS 14'-0"

ACTUAL WIDTH IS 16'-6"

JEFF LANGER (CONSTRUCTION ENGINEER) STATES

A 12" THICK SLAB W/ #5 @ 12" TOP & BOT WAS

PLACED ON THE SOUTH SIDE WHILE 2'-4" EXTENDED

AHEAD.

ALSO LENGTH (E-W) SHOWN ON FOUND. PLAN IS

24'-0" ≈ 24'-3" FIELD MEASURED

WEST EDGE OF TTR IS 2'-0" FROM EDGE OF SLAB

ON FOUND. PLAN - FIELD SHOWS 2'-10"

EAST EDGE OF TTR IS 5'-6" FROM EDGE OF SLAB

ON FOUND. PLAN - FIELD SHOWS 5'-4"

LENGTH OF TTR ON FOUND PLAN IS 16'-6"

FIELD MEASUREMENT SHOWS 16'-6". OK

Superconducting Super Collider Laboratory
2550 Beckleymeade, Mail Stop 2005
Dallas, Texas 75237-3946
(214) 708-6306

Physics Research Division - GEM ES&H Group

To: TTR Safety Review Team

From: Richard Guthrie, PE, CSP

Date: October 1, 1992

Re: Review of Structural Calculations for TTR frame and laser experiment gas chamber

---

The TTR frame structural calculation have already been reviewed by G. Tulk on June 2, 1992. This information will be included in the TTR Safety Evaluation Support Document (number TBD).

The gas chamber was evaluated by myself. The gas chamber is structurally sound to safely handle 15 atmospheres. Normal operating pressure will only be 3 to 4 atmospheres, with the expected maximum of 10 atmospheres (147 psig). The chamber has been pressure tested to 150 psig.

TEXAS TEST RIG
HAZARD TRACKING

October 1, 1992

Hazard No.	Hazard Description	Person Responsible	Est. Start	Est. Finish	Remarks	Status
TTR 1	EPO fails to cut power off during an emergency.	R. Guthrie	9/22/92	9/24/92	FSR has been submitted. EPO and gas detection system have been rewired by electrician and are now functioning properly. (9/24)	Closed
	Mitigating Action Check installation for fail safe feature; Functional test of EPO; demonstrate fail safe feature; Periodic testing of EPO.				**Specific Tasks Required:** Wire EPO & Gas detection to have fan continue to run after 20% LEL is detected or EPO is activated. Operational checkout of each EPO is required.	
TTR 2	Fire	Jim Truitt/ Ed Verminski	9/22/92	10/23/92	Provide fire extinguisher in computer room. An FSR has been prepared to correct this situation.	Open
	Mitigating Action Room is sprinklered. Number of fire extinguishers exceeds code. Flammable gas leak detection (at 10% & 20% of the LEL) and emergency ventilation provided. Ordinary combustibles will be kept to a minimum.				**Specific Tasks Required:** Add fire extinguisher to TTR computer room. Add additional fire extinguishers as necessary to TTR area. Move fire extinguishers from behind Laser Experiment frame to be accessible.	
TTR 3	Explosion / ignition of isobutane released from quartz container in the laser experiment.	R. Guthrie	9/22/92	11/15/92	Need verification of analysis for TTR frame and laser experiment gas chamber. Review needs to be independent of Ewald Zimmer-Nixdorf's (originator). Letter has been provided with R. Guthrie's review.	Closed
	Mitigating Action Leak check container / fittings; Chamber will be pressure tested to maximum anticipated pressure.				**Specific Tasks Required:** Pressure check required before operation. Vacuum check before operation. Independent verification of structural integrity of gas chamber. Independent verification of TTR frame structural integrity is also required.	

TEXAS TEST RIG
HAZARD TRACKING

October 1, 1992

Hazard No.	Hazard Description	Person Responsible	Remarks	Status
TTR 3a	Explosion / ignition of gas released from laser chamber.	R. Guthrie	Need verification of analysis for TTR frame and laser experiment gas chamber. Letter has been provided with R. Guthrie's review.	Closed
	Mitigating Action	Est. Start: 9/22/92 Est. Finish: 10/23/92		
	Verify adequacy of chamber; Control access to Laser Experiment area; Separate Laser Experiment from rest of TTR.		**Specific Tasks Required:** Pressure check required before operation. Vacuum check before operation. Independent verification of structural integrity of gas chamber. Independent verification of TTR frame structural integrity is also required.	
TTR 4	Explosion / ignition of gas resulting from improper tank (oxidizer, acetylene, etc.) accidentally installed.	R. Guthrie	One gas line required labeling. Chad Price has labeled the nitrogen line going into the clean room.	Closed
	Mitigating Action	Est. Start: 9/22/92 Est. Finish: 9/24/92		
	Tanks are labeled; Fittings used are sized and color coded to prevent connection of non-category tanks; Lines are inspected / verified during installation. Use a different size line to prevent misconnecting at the manifold. Lines are to be marked per ANSI 13.1.		**Specific Tasks Required:** Lines need labeling per ANSI 13.1. Nitrogen line going into clean room needs labeling.	
TTR 5	Emergency egress inadequate for safe egress of personnel.	Ed Verminski	Provide appropriate signs and marking for exits from TTR room. An FSR has been submitted to resolve this.	Open
	Mitigating Action	Est. Start: 9/22/92 Est. Finish: 10/23/92		
	Housekeeping must maintain a hazard-free environment; All aisles to maintain 44 inch minimum width; Control number of personnel in TTR during operation; Have appropriate signs and exits from TTR area.		**Specific Tasks Required:** Exit lights need to have arrows leading from TTR room. Need exit light, with arrow, leading from TTR staging room. Need exit light at exit (outside of TTR staging room). Routine housekeeping.	

TEXAS TEST RIG
HAZARD TRACKING

October 1, 1992

Hazard No.	Hazard Description	Person Responsible	Remarks	Status
TTR 6	Explosion / ignition of gas in the vent line.	Frank Stocker/Jim Truitt	Delete two parking spaces west of bottled gas storage room. An FSR has been submitted to resolve this.	Open
	Mitigating Action	Est. Start: 9/22/92 Est. Finish: 10/23/92		
	Vent line shall be sized for max. flow of gases; must have a min. number of bends, max. bend radiuses, be free of dents; should be located to min. the prob. of contact; be 15 ft. away from electrical equipment and other potential ignition sources		**Specific Tasks Required:** Two parking spaces west of the TTR gas pad need to be painted with "NO PARKING." Traffic cones should be used during the interim.	
TTR 6a	Vacuum pump introduces oxygen into vent lines and is ignited.	Frank Stocker/Jim Truitt	Delete two parking spaces west of bottled gas storage room. An FSR has been submitted to resolve this.	Open
	Mitigating Action	Est. Start: 9/22/92 Est. Finish: 10/23/92		
	Purge vent line with nitrogen; vent discharge to be 15 ft. away from ignition sources; ignition sources to be 15 ft. away from vacuum pump. Vacuum pump acts as a check valve to prevent back flow from ambient.		**Specific Tasks Required:** Two parking spaces west of the TTR gas pad need to be painted with "NO PARKING." Traffic cones should be used during the interim.	
TTR 7	Eye hazards associated with laser radiation.	Jim Truitt	Laser goggles appropriate for an Argon Laser were being used for a Nitrogen Laser. Goggles for proper wavelength will be ordered.	Open
	Mitigating Action	Est. Start: 9/22/92 Est. Finish: 11/6/92		
	Experiment should be 3B Class; Provide eye protection as necessary; enclose beam; Control access to area; Provide warning signs.		**Specific Tasks Required:** Proper goggles for 337.1 nm wavelength need to ordered.	

TEXAS TEST RIG
HAZARD TRACKING

October 1, 1992

Hazard No.	Hazard Description	Person Responsible	Est. Start	Est. Finish	Remarks	Status
TTR 8	Static electricity discharge ignites gas leak.	Jim Truitt	9/22/92	10/23/92	Bonding required on laser frame and vent lines at gas bottle storage area. Provide verification (testing) of bonding including for TTR. FSR for bonding vent lines is awaiting parts. FSR has been submitted to provide bonding of Laser Experiment fixt. and gas/elect. racks.	Open
	Mitigating Action Major metal framing and components will be properly bonded and grounded to eliminate electric potential. Bonding and emergency vent fan installation completed during construction. Leak detection will be installed before operation.				**Specific Tasks Required:** Laser experiment rack needs to be electrically bonded. Electrical and gas racks need to be electrically bonded. Adequacy of single point ground for TTR frames, racks, etc. needs to be verified. Vent lines need to be electrically grounded.	
TTR 8a	Fire hazard. Improper grounding could cause difference in potential between metal objects. Difference in electrical potential could act as	Frank Stocker/Jim Truitt	9/22/92	10/23/92	Bonding required on laser frame and vent lines at gas bottle storage area. Provide verification (testing) of bonding including for TTR. FSR for bonding vent lines is awaiting parts. FSR has been submitted to provide bonding of Laser Experiment fixture and gas/electrical racks.	Open
	Mitigating Action Properly bond and ground all framing members and other metal components of TTR. Flammable gas leak detection and ventilation will keep flammable mixtures from escaping to ignition sources.				**Specific Tasks Required:** Laser experiment rack needs to be electrically bonded. Electrical and gas racks need to be electrically bonded. Adequacy of single point ground for TTR frames, racks, etc. needs to be verified.	
TTR 9	Rotating blade of emergency and muffin fans and associated hazards.	Jim Truitt	9/22/92	9/24/92	Wire fabric guard requested over blower fans in magnet power cabinet. Jim Truitt has screens in place. (9/24)	Closed
	Mitigating Action Guards and screens are installed; fan is used for emergencies only.				**Specific Tasks Required:** Screens over "muffin" fans need to be installed (emergency fan is already guarded).	

TEXAS TEST RIG
HAZARD TRACKING

October 1, 1992

Hazard No.	Hazard Description	Person Responsible	Est. Start	Est. Finish	Remarks	Status
TTR 10	Fire	Frank Stocker/Jim Truitt	9/22/92	10/23/92	Fire extinguishers at laser rack are to be relocated. An FSR has been submitted to resolve this issue.	Open
	Mitigating Action: Room is sprinklered. Number of fire extinguishers exceeds code. Flammable gas leak detection (at 10% & 20% of the LEL) and emergency ventilation provided. Ordinary combustibles will be kept to a minimum.				**Specific Tasks Required:** Move fire extinguishers to an accessible location. See TTR # 3.	
TTR 11	Magnetic field interferes with pacemaker operation	Ed Verminski/ Jim Truitt	9/22/92	10/23/92	Pacemaker signs installed on TTR. Signs to be ordered. These will be permanently affixed on all four sides of TTR.	Open
	Mitigating Action: Provide personnel authorized to enter the TTR Lab with medical screening for pacemaker use, as well as surgical implants, sutures, and metal prostheses. Post warning signs on external doors and on TTR frame. Provide physical barricade around the TTR, at the 10-15 gauss boundary.				**Specific Tasks Required:** Pacemaker signs need to be on all four side of the TTR frame.	
TTR 12	Magnetic field interferes with pacemaker operation	Ed Verminski/ Jim Truitt	9/22/92	10/23/92	High voltage signs to be installed on detector staging frame. Jim Truitt will be providing a more permanent method of displaying signs.	Open
	Mitigating Action: Provide personnel authorized to enter the TTR Lab with medical screening for pacemaker use, as well as surgical implants, sutures, and metal prostheses. Post warning signs on external doors and on TTR frame. Provide physical barricade around the TTR, at the 10-15 gauss boundary.				**Specific Tasks Required:** High voltage signs to be installed on detector staging frame(s) in a permanent manner.	

TEXAS TEST RIG
HAZARD TRACKING

October 1, 1992

Hazard No.	Hazard Description	Person Responsible	Est. Start	Est. Finish	Remarks	Status
TTR 13	Periodic leak checking and routine maintenance not performed allowing degradation of system.	Frank Stocker/ Ed Verminski	9/22/92	10/23/92	Review team would like to see the log book identified in the SE, and procedures in place are being used. This would include approval of the procedures written for the project.	Open
	Mitigating Action Procedures will call for a maintenance log to be kept on all maintenance performed on the TTR systems. Inspections of maintenance will ensure that proper work is done.				**Specific Tasks Required:** Log book needs to have a document number (Frank Stocker). All draft TTR procedures need approval (Ed Verminski)	
TTR 14	Fire	Ed Verminski/Frank Stocker/Cas Milner	9/22/92	11/15/92	A gas detector was located in the bottom near the holes in the cabinet of one end of the control/monitor cabinet rack. I believe the sampling cabinet air decreases significantly as the cabinet distance increases because of all the cracks and other openings in the cabinets.	Open
	Mitigating Action Room is sprinklered. Number of fire extinguishers exceeds code. Flammable gas leak detection (at 10% & 20% of the LEL) and emergency ventilation provided. Ordinary combustibles will be kept to a minimum.				**Specific Tasks Required:** An additional Houston gas detection system is to be ordered. This is needed to accommodate the additional technologies that are to be installed on the TTR. This will also allow us to have one gas detector for each of the cabinets in question. Each Houston system needs to be tied into the Enmet system.	
TTR 15	Static electricity discharge ignites gas leak.	Frank Stocker/Jim Truitt	9/22/92	10/23/92	Test documentation of the ground point should be on hand to verify adequacy of the single point ground system . The FSR for bonding the racks will include testing and verifying the single point ground system.	Open
	Mitigating Action Major metal framing and components will be properly bonded and grounded to eliminate electric potential. Bonding and emergency vent fan installation completed during construction. Leak detection will be installed before operation.				**Specific Tasks Required:** Laser experiment rack needs to be electrically bonded. Electrical and gas racks need to be electrically bonded. Adequacy of single point ground for TTR frames, racks, etc. needs to be verified.	

TEXAS TEST RIG
HAZARD TRACKING

October 1, 1992

Hazard No.	Hazard Description	Person Responsible	Est. Start	Est. Finish	Remarks	Status
TTR 16	Fire egress from main building causes personnel to egress through test facility during testing. **Mitigating Action** Procedures to cease TTR testing when main building alarm is activated; Control access to room; Remove Exit signs over door; Testing light to be activated during testing. During a fire evacuation of Building 4, TTR personnel will shut down TTR and evacuate the building per TTR emergency procedures.	Ed VErminski	9/22/92	10/23/92	The emergency procedures do not provide guidance/instruction (checklist) and a call list for security personnel who would respond to gas alarms after normal working hours. In work. **Specific Tasks Required:** Update emergency procedures. All draft TTR operating and emergency procedures need approval.	Open
TTR 17	Adverse environmental impact of vented gases. **Mitigating Action** Amount of vented gases to be less than amount of gases authorized by Texas Department of Air Quality; The amount of gas used from tanks and will be monitored / documented.	Ed Verminski	7/16/92	10/23/92	There is a need to having written authority to release the amount of gases projected for the TTR. Ed Verminski has been tasked to accomplish this (7/16). **Specific Tasks Required:** Written approval from EPA to release these gases.	Open
TTR 18	Emergency egress inadequate for safe egress of personnel. **Mitigating Action** Housekeeping must maintain a hazard-free environment; All aisles to maintain 44 inch minimum width; Control number of personnel in TTR during operation; Have appropriate signs and exits from TTR area.	Ed Verminski	7/16/92	10/23/92	There is a need to having evacuation routes to be posted throughout the TTR laboratory. Ed Verminski has been tasked to accomplish this (7/16). **Specific Tasks Required:** Evacuation routes to be posted throughout the TTR laboratory as appropriate.	Open

TEXAS TEST RIG
HAZARD TRACKING

October 1, 1992

Hazard No.	Hazard Description	Person Responsible	Est. Start	Est. Finish	Mitigating Action	Specific Tasks Required:	Remarks	Status
TTR 19	Explosion / ignition of gas resulting from improper tank (oxidizer, acetylene, etc.) accidentally installed.	Frank Stocker	9/22/92	10/23/92	Tanks are labeled; Fittings used are sized and color coded to prevent connection of non-category tanks; Lines are inspected / verified during installation. Use a different size line to prevent misconnecting at the manifold. Lines are to be marked per ANSI 13.1.	Flammable gas lines need 3/8" flexible, high-pressure line.	Flammable lines need to 3/8" and inert lines remain 1/4."	Open
TTR 20	Fire detection method does not detect fire.	Ed Verminski/Frank Stocker/Jim Truitt	9/22/92	11/6/92	Verify presence of sprinklers in TTR and clean room. Install smoke detectors as required.	Smoke detectors to be installed as appropriate.	FSR submitted to install three smoke detectors in the TTR lab.	Open
TTR 21	Wall penetrations accelerate / spread fire.	Frank Stocker/Jim Truitt	9/22/92	11/15/92	Openings / holes in fire rated walls to be restored to the original condition; Wall penetrations to be kept to a minimum.	Fire walls must comply with NFPA code, which requires the opening to the gas pad to be sealed.	Upon completion of the installation of the gas lines, a fire retardant material shall fill the external opening to the gas pad.	Open

TEXAS TEST RIG
HAZARD TRACKING

October 1, 1992

Hazard No.	Hazard Description	Person Responsible	Remarks	Status
TTR 22	Excessive noise level.	Mary Keen/Jim Truitt	Noise measurement needs to made with everything in operation in the TTR lab.	Open

Mitigating Action	Est. Start	Est. Finish
Survey to document noise level; Control access to area; Hazardous areas will be marked / barricaded; Provide ear plugs / muffs as required.	9/22/92	10/15/92

Specific Tasks Required: Sound level survey will be taken inside the TTR room with all three air conditioners operating.

ACTION ITEM FORM
TEXAS TEST RIG READINESS REVIEW

Date:___July 16_____

Action Item No:____001_____

Originator Name: Richard Guthrie

Organization: PRD/GEM/ES&H

Action Item: There is a code requirement for 15 ft. distance between the point of transfer (where the cylinders are connected into the system) and the vent discharge. The classified area does not extend beyond an unpierced wall, roof, or solid vaportight partition. Where the south chain link wall is currently located, what type of wall would meet this requirement to allow the installation of the three AC compressors on the pad?

Person assigned to complete action: R. Guthrie/Fire Prevention Engineer

Date to be completed: 8-7-92

Corrective action:

NFPA 58-1988 Table 3-8.2.2 Note 1 (which applies to the extent of classified areas) states: "The classified area shall not extend beyond an unpierced wall, roof, or solid vapor tight partition."

Strict interpretation would relate no problem with a tin or sheet metal wall that had a vapor-tight seal at base & top.

Person completing corrective action: Richard Guthrie

Date completed: August 4, 1992

Reviewed/approved by: (Chairman)

Remarks: Air compressors were moved to the roof. This becomes a moot point.

ACTION ITEM FORM
TEXAS TEST RIG READINESS REVIEW

Date:___July 16_____

Action Item No:__002____

Originator Name:__Richard Guthrie_____

Organization:_____

Action Item: There is some concern with lightning striking the vent line.

Person assigned to complete action:___R. Guthrie_____

Date to be completed:_____Open_____

Corrective action:

Building does not have lightning protection. Ensure vent and gas lines are properly grounded. FSR in work.

Person completing corrective action:_____

Date completed:_____

Reviewed/approved by: (Chairman)

Remarks: closed To TTR # 08 of TTR Hazard Tracking System

ACTION ITEM FORM
TEXAS TEST RIG READINESS REVIEW

Date:___July 16_____

Action Item No:__003_____

Originator Name:__Richard Guthrie_____

Organization: PRD/GEM/ES&H

Action Item: There is an interpretation of the National Gas Code (NFPA 54) that could limit the pressure to a maximum of 5 psig (2.5.1); and/or 20 psig (2.5.3).

Person assigned to complete action: Richard Guthrie

Date to be completed: 8-7-92

Corrective action:

CFR 1910.110(b)(13)(i)(b) vapor over 20 psig OK for research and experimental labs.

NFPA 54-1988 2.5.1.c.2 allows over 5 psig if approved by the authority having jurisdiction (AHJ) & is used exclusively for research.

NFPA 54-1988 2.5.3 states pressure can't exceed 20 psig except areas of the building that meet NFPA 58 (Standard for the Storage and Handling of LPG) and are used exclusively for research.

Lines, fittings, valves, etc. meet NFPA 58 requirements for metal tubing, flexible hose, etc.; TTR is research only; Should not be a problem with the exception of documentation of AHJ approval.

DOE concurrence with SE will provide AHJ approval for the above.

Person completing corrective action: Richard Guthrie

Date completed: Open

Reviewed/approved by:

Remarks: will be closed upon DOE's concurrence with the TTR SE.

ACTION ITEM FORM
TEXAS TEST RIG READINESS REVIEW

Date:___July 16_____

Action Item No:____004____

Originator Name:__Richard Guthrie_____

Organization:_____

Action Item: There is some concern over the use of the Edwards E2M7 vacuum pumps. (Concern needs to be defined)

Person assigned to complete action:___R. Guthrie_____

Date to be completed:_____8-7-92_____

Corrective action:

Accepted industry wide for use with flammable gases. Best on market. Seals and gaskets, along with a designed system that prevents backflow of gases (air) into system, makes units acceptable.

Person completing corrective action:____R. Guthrie_____

Date completed:_____8-7-92_____

Reviewed/approved by:

Remarks:

ACTION ITEM FORM
TEXAS TEST RIG READINESS REVIEW

Date: July 16

Action Item No: 005

Originator Name: Richard Guthrie

Organization: PRD/GEM/ES&H

Action Item:

All gas lines need labels throughout the length at respectable intervals - 15 to 20 feet is recommended, and at source, entrance of line to room (both sides), and in the cabinets.

Person assigned to complete action: Richard Guthrie

Date to be completed: 8-7-92

Corrective action:

Lines marked and taged per ANSI 13.1.

Person completing corrective action: Richard Guthrie & Chad Price

Date completed: 9/4/92

Reviewed/approved by:

Remarks:

ACTION ITEM FORM
TEXAS TEST RIG READINESS REVIEW

Date:___16 July 1992_____

Action Item No:__~~Keen-1~~ C05

Originator Name:____Mary Keen_____

Organization:_____ES & H Department_____

Action Item:

All gas lines need labels throughout the length at respectable intervals--15-20 feet is recommended, and at source, entrance of line to the room (both sides), and in the cabinets.

Person assigned to complete action:_____

Date to be completed:_____

Corrective action:

Compelted satisfactorily. Keen.

Person completing corrective action:_____

Date completed:_____

Reviewed/approved by: (Chairman)

Remarks:

ACTION ITEM FORM
TEXAS TEST RIG READINESS REVIEW

Date: July 16

Action Item No: 006

Originator Name: Mary Keen

Organization: ES&H Department

Action Item:

Leak checks and testing of lines must be documented. A controlled document should be used, including signatures of persons doing the testing.

Person assigned to complete action: Richard Guthrie/G. Mistelmakher

Date to be completed: 8-7-92

Corrective action:

TTR Procedures GEM-TN-92-154 & -155 have been drafted. Proposal is to include this documentation as a line entry in the applicable TTR technology log book (a controlled document).

Person completing corrective action: Richard Guthrie

Date completed: Open

Reviewed/approved by:

Remarks: Closed To TTR # 16.

ACTION ITEM FORM
TEXAS TEST RIG READINESS REVIEW

Date: 16 July 1992

Action Item No: ~~Keen-2~~ 006

Originator Name: Mary Keen

Organization: ES & H Department

Action Item:

Leak checks and testing of lines must be documented. A controlled document should be used, including signatures of persons doing the testing.

Person assigned to complete action:

Date to be completed:

Corrective action:

Compelted satisfactorily. Keen.

Person completing corrective action:

Date completed:

Reviewed/approved by: (Chairman)

Remarks:

ACTION ITEM FORM
TEXAS TEST RIG READINESS REVIEW

Date: 16 July 1992

Action Item No: Keen-3-007

Originator Name: Mary Keen

Organization: ES & H Department

Action Item:

Office personnel outside of the TTR must be informed of how they are to respond in case of emergencies. This should be communicated in writing and documented.

Person assigned to complete action: G. MISTELMAKHER-

Date to be completed: 8-7-92

Corrective action: Needs work -

Person completing corrective action:

Date completed:

Reviewed/approved by: (Chairman)

Remarks: Closed To TTR # 16

ACTION ITEM FORM
TEXAS TEST RIG READINESS REVIEW

Date: 16 July 1992

Action Item No: ~~Keen-3~~ 007

Originator Name: Mary Keen

Organization: ES & H Department

Action Item:

Office personnel outside of the TTR must be informed of how they are to respond in case of emergencies. This should be communicated in writing and documented.

Person assigned to complete action:

Date to be completed:

Corrective action:

This item still needs to be addressed. I believe the action already taken is to restrict alarms to the TTR only. Some offices are close enough to the TTR to hear an alarm, therefore, communication is still needed. Keen.

Person completing corrective action:

Date completed:

Reviewed/approved by: (Chairman)

Remarks:

ACTION ITEM FORM
TEXAS TEST RIG READINESS REVIEW

Date: July 16

Action Item No: 008

Originator Name: Mary Keen

Organization: ES&H Department

Action Item:

The vacuum pumps outside the building, but in the fence enclosure, contain oil. Spill containment is needed in case of a pump failure. The containment must provide for spraying of oil from the pump.

Person assigned to complete action: Richard Guthrie/G. Mistelmakher

Date to be completed: 8-7-92

Corrective action:

INTERIM: The vacuum pumps have an aluminum enclosure to contain oil from any spraying that may occur. An oil pan to contain a major leak is being fabricated.

Person completing corrective action: ~~Richard Guthrie~~ Jim Truitt

Date completed: 8-7-92

Reviewed/approved by: (Chairman)

Remarks:

ACTION ITEM FORM
TEXAS TEST RIG READINESS REVIEW

Date: 16 July 1992

Action Item No: ~~Keen-1~~ 008

Originator Name: Mary Keen

Organization: ES & H Department

Action Item:

The vacuum pumps outside the building, but in the fenced enclossure, contain oil. Spill containment is needed in case of a pump failure. The containment must provide for spraying of oil from the pump.

Person assigned to complete action:

Date to be completed:

Corrective action:

Compelted satisfactorily. Keen.

Person completing corrective action:

Date completed:

Reviewed/approved by: (Chairman)

Remarks:

ACTION ITEM FORM
TEXAS TEST RIG READINESS REVIEW

Date: 16 July 1992

Action Item No: GN 5-009

Originator Name: Mary Keen

Organization: ES & H Department

Action Item:

Is the probable composition and quantity of gas to be released within the operating limits of the SSCL air quality permit?

Person assigned to complete action: ~~Richard Centrone~~ Ed. Vernowski

Date to be completed: 7-24-92

Corrective action: LETTER OF ACKNOWLEDGMENT.

Ed. Vernowski

Person completing corrective action:

Date completed:

Reviewed/approved by: (Chairman)

Remarks: closed to TTR # 17.

ACTION ITEM FORM
TEXAS TEST RIG READINESS REVIEW

Date: 16 July 1992

Action Item No: ~~GN-5~~ CC9

Originator Name: Mary Keen

Organization: ES & H Department

Action Item:

Is the probable composition and quantity of gas to be released within the operating limits of the SSCL air quality permit?

Person assigned to complete action:

Date to be completed:

Corrective action:

Compelted satisfactorily. Keen.

Person completing corrective action:

Date completed:

Reviewed/approved by: (Chairman)

Remarks:

From: Richard Guthrie (7/16/92)
To: Ed Verminski
CC: Mary Keen, Tom Murphy

TTR emissions

Ed,

The TTR will be releasing an estimated MAXIMUM of the following:

Freon (CF4) = .0001 lb/day or .0004 tons/yr
Ethane = .0001 lb/day or .0003 tons/yr
Isobutoane = .0002 lb/day or .00095 tons/yr

[This does not include the release of nitrogen, argon, carbon dioxide]

I think this should be well within the 6 lbs/day limit.

- Rich

ACTION ITEM FORM
TEXAS TEST RIG READINESS REVIEW

Date: 16 July 1992

Action Item No: PH 1-010

Originator Name: Mary Keen

Organization: ES & H Department

Action Item:

The ODH analysis needs to be submitted to the ES&H Department for evaluation.

Person assigned to complete action: R. Guthrie

Date to be completed: 8-7-92

Corrective action: Ed –

Person completing corrective action: Mary Keen / Richard Guthrie

Date completed: 7/31/92

Reviewed/approved by: (Chairman)

Remarks:

ACTION ITEM FORM
TEXAS TEST RIG READINESS REVIEW

Date:___16 July 1992_____

Action Item No:__~~PH-1~~_010__

Originator Name:____Mary Keen_____

Organization:_____ES & H Department_____

Action Item:

The ODH analysis needs to be submitted to the ES&H Department for evaluation.

Person assigned to complete action:_____

Date to be completed:_____

Corrective action:

Compelted satisfactorily. Keen.

Person completing corrective action:_____

Date completed:_____

Reviewed/approved by: (Chairman)

Remarks:

ACTION ITEM FORM
TEXAS TEST RIG READINESS REVIEW

Date: 16 July 1992

Action Item No: PH 4-011

Originator Name: Mary Keen

Organization: ES & H Department

Action Item:

I do not agree that asphyxiation is the 'lone' toxicological hazard. Butane/isobutane have a TLV of 800 ppm based on human studies where these gases induced narcosis. 800 ppm translates to 0.008%. Could this quantity be released? If so, modify the evaluation statement.

Person assigned to complete action: R. Guthrie

Date to be completed: 8-7-92

Corrective action: Multiple Hazards must occur. chain of events - Probability too low - Haz. Analysis inadequate this concern.

Person completing corrective action: Richard Guthrie

Date completed: 8-7-92

Reviewed/approved by: (Chairman)

Remarks:

ACTION ITEM FORM
TEXAS TEST RIG READINESS REVIEW

Date: 16 July 1992

Action Item No: ~~PH-~~ 011

Originator Name: Mary Keen

Organization: ES & H Department

Action Item:

I do not agree that asphyxiation is the 'lone' toxicological hazard. Butane/isobutane have a TLV of 800 ppm based on human studies where these gases induced narcosis. 800 ppm translates to 0.008%. Could this quantity be released? If so, modify the evaluation statement.

Person assigned to complete action:

Date to be completed:

Corrective action:

Compelted satisfactorily. Keen.

Person completing corrective action:

Date completed:

Reviewed/approved by: (Chairman)

Remarks:

ACTION ITEM FORM
TEXAS TEST RIG READINESS REVIEW

Date: 16 July 1992

Action Item No: PH 9-012

Originator Name: Mary Keen

Organization: ES & H Department

Action Item:

Copy the ES&H Department with the noise survey results for our files.

Person assigned to complete action:

Date to be completed:

Corrective action: Not a show stopper - after operation

Person completing corrective action:

Date completed:

Reviewed/approved by: (Chairman)

Remarks: closed to TTR #22

ACTION ITEM FORM
TEXAS TEST RIG READINESS REVIEW

Date:___16 July 1992_____

Action Item No:__PH~~9~~ 012___

Originator Name:____Mary Keen_____

Organization:_____ES & H Department_____

Action Item:

Copy the ES&H Department with the noise survey results for our files.

Person assigned to complete action:_____

Date to be completed:_____

Corrective action:

Compelted satisfactorily. Keen.

Person completing corrective action:_____

Date completed:_____

Reviewed/approved by: (Chairman)

Remarks:

ACTION ITEM FORM
TEXAS TEST RIG READINESS REVIEW

Date: July 16

Action Item No: 013

Originator Name: Mary Keen

Organization: ES&H Department

Action Item:

Signs, documentation of training, proper eye protection, controls to tell when it is on, some means of restricting access, and enclosure with light colored non-reflective surfaces and adequate lighting (to prevent dilation of the eye) are either good practice or required for use of Class IIB lasers.

Person assigned to complete action: Richard Guthrie/G. Mistelmakher

Date to be completed: 8-7-92

Corrective action:

INTERIM: Open pending decision to anchor laser to table or provide recommended curtain.

Person completing corrective action: Richard Guthrie

Date completed:

Reviewed/approved by: (Chairman)

Remarks: closed to TTR# 7.

ACTION ITEM FORM
TEXAS TEST RIG READINESS REVIEW

Date:___16 July 1992_____

Action Item No:__~~PH 13~~ 013

Originator Name:____Mary Keen_____

Organization:_____ES & H Department_____

Action Item:

Signs, documentation of training, proper eye protection, controls to tell when it is on, some means of restricting access, and enclosure with light colored non-reflective surfaces and adequate lighting (to prevent dilation of the eye) are either good practice or required for use of Class III lasers.

Person assigned to complete action:_____

Date to be completed:_____

Corrective action:

Compelted satisfactorily. Keen.

Person completing corrective action:_____

Date completed:_____

Reviewed/approved by: (Chairman)

Remarks:

ACTION ITEM FORM
TEXAS TEST RIG READINESS REVIEW

Date: July 16

Action Item No: 014

Originator Name: Richard Guthrie

Organization: PRD/GEM/ES&H

Action Item: Use of flexible tubing (Tygon 3603) for flammable gas in the TTR.

Person assigned to complete action: Richard Guthrie

Date to be completed: 8-7-92

Corrective action:

Code requires 1250 psig; clamped; not to exceed 6 ft. [1910.110 (b)(9)(iii) & (vii)(b)&(c)]

Tygon 3603 tubing is pressure rated to 1650 psig; length does not exceed 12 inches; secured with clamps.

Person completing corrective action: Richard Guthrie

Date completed: August 4, 1992

Reviewed/approved by: (Chairman)

Remarks:

ACTION ITEM FORM
TEXAS TEST RIG READINESS REVIEW

Date: July 16

Action Item No: 015

Originator Name: Richard Guthrie

Organization: PRD/GEM/ES&H

Action Item: Is there a requirement for UL approved gas detection system for TTR?

Person assigned to complete action: Richard Guthrie/Fire Protection Engineer

Date to be completed: 8-7-92

Corrective action:

TTR is in an unclassified (non-Cat 1 div 2) area, so explosion proofing not required.

NFPA 54 - National Gas Code:
4.1.5.b Detection of leaks & defects
...shall be located by means of an approved combustible gas detector...

1.7 Definitions

Approved: acceptable to the authority having jurisdiction

Authority Having Jurisdiction: organization, office or individual responsible for "approving" equipment, an installation or procedure (for TTR = F. Gilman)

Commercially available unit, such as Enmet (which is used elsewhere at the SSCL), meets this criteria.

Person completing corrective action: Richard Guthrie

Date completed: August 4, 1992

Reviewed/approved by: (Chairman)

Remarks:

ACTION ITEM FORM
TEXAS TEST RIG READINESS REVIEW

Date: 9-28-92

Action Item No: ~~NEW~~ 016

Originator Name: Mary Keen

Organization: ES&H Department

Action Item:

Feed lines at the connection to the gas bottles MUST be sized to prevent accidental connection of flammable gas to non-flammable lines or non-flammable gas to flammable gas lines. The lines must be of different diameters so they cannot be interchanged.

This item was generated as a result of a readiness review designed to verify that the TTR was ready to operate and that the checklist was completed in a satisfactory manner.

Inspection of the gas cylinder area, in the fenced area outside Stoneridge Building 4, on the south wall adjacent to the TTR, revealed a 40% methane/argon gas cylinder connected to a non-flammable (argon) line. The cylinder was properly labelled and had a flammable placard. In spite of this, it had been connected improperly.

Person assigned to complete action:

Date to be completed:

Corrective action: closed To TTR # 19.

Person completing corrective action:

SSC LABORATORY
FACILITIES SERVICE REQUEST

REQUESTER R. Guthrie		DIVISION PRD/GEM	
PHONE 6306	BUILDING 4	ROOM TTR Room	DATE Oct 1, 1992
COST ACCOUNT CODE XPHA-9LT		SUPERVISOR APPROVAL	

This Special request for services is to correct a Safety Code violation that was found during an inspection of:

TTR LAB Bldg 4 on 9/22/92
(location) date

Please be specific about type an location of problem.

1. Relocate fire extinguishers from behind laser experiment rack.
2. Provide an additional fire extinguisher for TTR computer room.
3. Provide smoke detectors as follows:
   A. one in "clean room."
   B. one on wall near laser experiment.
   C. one on wall near TTR instrumentation (see enclosure)

SUBMIT TO FACILITES ENGINEERING AND MAINTENANCE

HALLET JOHNSON NS2030 SR3 FAX 708-5156 LTS FEM 12-14-90

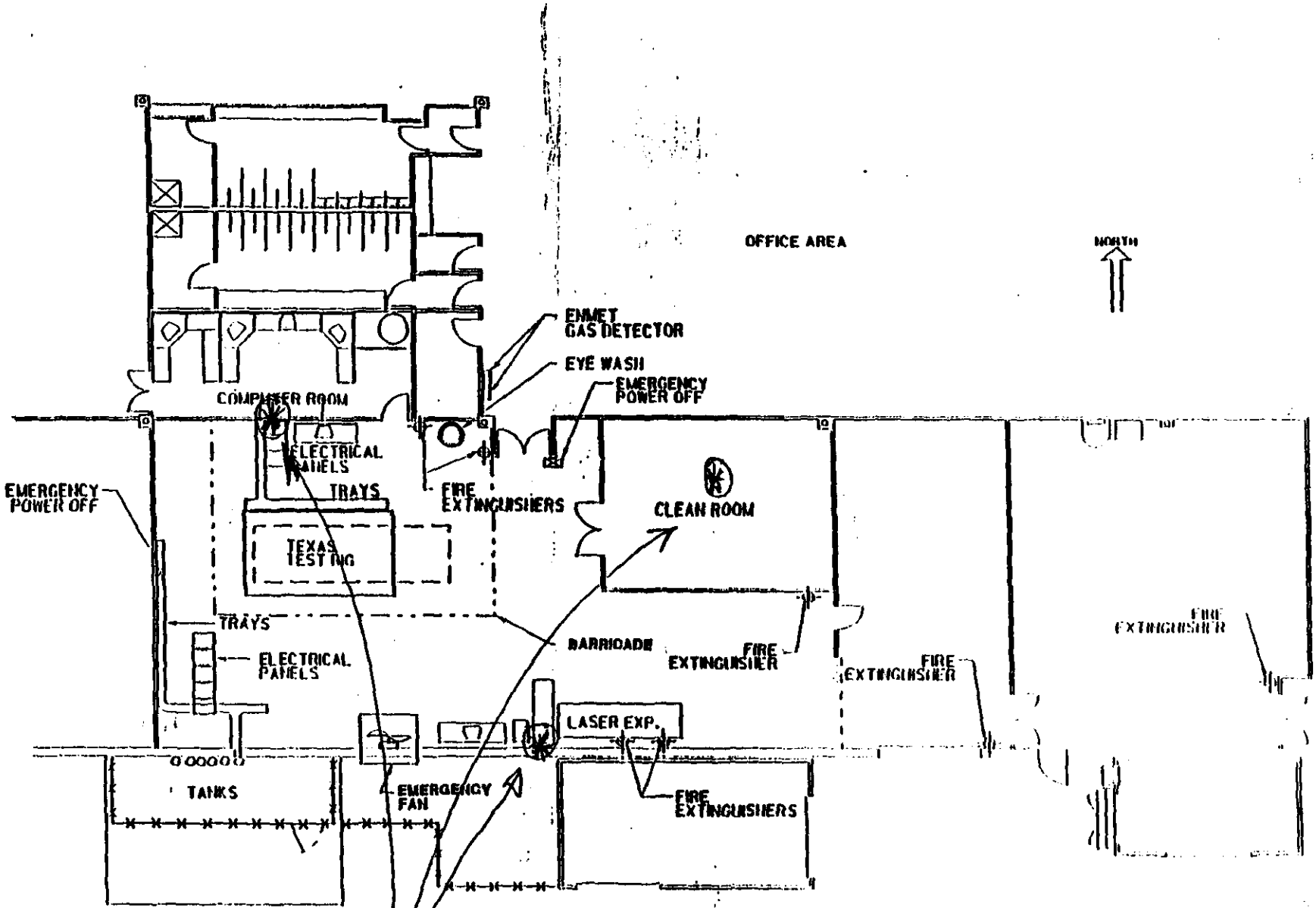

Texas Test Rig Laboratory Layout

⊛ Proposed Smoke Detector Locations

PHYSICS RESEARCH DIVISION
REQUISITION WORKSHEET

NAME Edward Milner GROUP _____ EXT. _____ DATE 10/1/92

Item	Quantity	Item Description	Unit Cost	Ext. Cost
1	1	Gas Leak Detector / Alarm System	6000.00	6000.00
		Buyer # 71, Neil Breckenridge		

Comments _____ Total Order 6000.00

Charge Account Code _____

RUSH Order? Yes ___ No ___

Suggested Vendor Institute for Beam Particle Dynamics
University of Houston

Date Required: _____

Signature Edward C. Zilmer

Group Leader Approval _____

Prof. Roy Weinstein
tel. # (713) 743 3600

135

From: Bill Dorn (9/22/92)
To: Tom Murphy
CC: Sam Baker, Larry Coulson, Debra Fontenot, Richard Guthrie, Ed Mach
Subject: Time:5:21 PM
OFFICE MEMO TTR Walk Through 9/22/92 Date:9/22/92
Based on the walk through of TTR conducted on 9/22/92 the following comments are offered:

No fire extinguisher was located in the computer room as called for in the TTR Safety Requirements Checklist (TTR-SRC); One fire extinguisher was blocked and needs to be relocated;
An additional fire extinguisher is blocked and not mounted. Fire extinguishers in the amount and type designated by fire protection personnel should be mounted and remain accessible at all times.

A gas detector was located in the bottom near the holes in the cabinet of one end of the control/monitor cabinet rack(SW corner of room). This cabinet had an exhaust fan at the top which was intended to draw any gases which could accumulate in any of the 5 or 6 cabinets through holes at the bottom of each cabinet. The cabinet at the end of the rack on the opposite end from the fan had a large opening through which fresh air could be drawn by the fan supposedly to keep all cabinets ventilated. Instead of sampling air from all the cabinets as intended, I believe the sampling cabinet air decreases significantly as the cabinet distance increases because of all the cracks and other openings in the cabinets. I recommend that a flow test be made to determine the effectiveness of the system.

Structural analysis required by the TTR-SRC of various items should be verified by a qualified TTR independent person.

Laser goggles appropriate for an Argon Laser were being used for a Nitrogen Laser. A determination needs to be made to determine if the goggles in use are in fact appropriate for a Nitrogen Laser. If not, appropriate goggles need to be obtained.

A number of caution and danger signs were temporarily located throughout the area. These signs and additional ones such as the pacemaker wearer danger signs needed for all sides of the TTR need to be firmly secured.

The Nitrogen line running from the bottle through the wall and into the "clean" room needs to be labeled.

The control/monitor cabinets on the north side of the TTR have floor mounted fans which are not protected from inadvertent contact.

Test documentation of the ground point should be on hand to verify adequacy of the single point ground system .

The emergency procedures do not provide guidance/instruction (checklist) and a call list for security personnel who would respond to gas alarms after normal working hours.

Bill Dorn

Superconducting Super Collider Laboratory
Physics Research
2550 Beckleymeade Avenue, Suite 125
Dallas TX 75237-3946
(214) 708–6380
Fax: (214) 708-0006

Memorandum

To: Tom Murphy

From: Jerry Gunnels

Date: September 23, 1992

Subject: Open Items after September 22 Walk-through of TTR

---

1. Emergency vent fan needs to remain in operation after the alarm is activated.
2. Provide fire extinguisher in computer room.
3. Need verification of analysis for TTR frame and laser experiment gas chamber.
4. One gas line required labeling.
5. Provide appropriate signs and marking for exists from TTR room.
6. Delete two parking spaces west of bottled gas storage room.
7. Reverify the laser goggles and/or replace as required.
8. Bonding required on laser frame and vent lines at gas bottle storage area. Provide verification (testing) of bonding including for TTR.
9. Wire fabric guard requested over blower fans in magnet power cabinet.
10. Fire extinguishers at laser rack are to be relocated.
11. Pacemaker signs installed on TTR.
12. High voltage signs to be installed on detector staging frame.
13. Would like to see the log book identified in the SE, and procedures in place are being used. This would include approval of the procedures written for the project. Believe this should be in place before Fred Gilman approves operation.

Superconducting Super Collider Laboratory
2550 Beckleymeade, Mail Stop 2005
Dallas, Texas 75237-3946
(214) 708-6306

Physics Research Division - GEM ES&H Group

To: Frank Stocker

From: Richard Guthrie

Date: October 2, 1992

Re: TTR Hazard Resolution - Specific Tasks of Individuals

The purpose of this letter is to delineate the responsibilities of each of the individuals involved with the mitigation of identified hazards for the TTR Laboratory. Enclosed, you will find a copy of the TTR Hazard Tracking forms.

This memo should help to avoid confusion and to ensure that these mitigating tasks are followed through to completion.

The tasks identified for your action are as follows:

TTR 6 Ensure parking spaces are marked off as "NO PARKING." (an FSR has been submitted)

TTR 8
a. Laser Experiment rack needs to be electrically bonded to ground.
b. Electrical and gas rack needs to be electrically bonded to ground.
c. Adequacy of single point ground for TTR frames, racks, etc. needs to be verified.
d. Ensure vent lines are bonded electrically to ground.
(an FSR has been submitted).

TTR 10 Move fire extinguishers to an accessible location (an FSR has been submitted).

TTR 13 Ensure all the draft TTR procedures are approved (copies of each draft procedure is provided).

TTR 14 a. Ensure Houston gas detection (a second Houston gas detection system is on order) is recalibrated to 20% LEL (Currently, Houston system is calibrated at less than 10% LEL. This will cause a nuisance factor...especially when the Houston gas system is connected to the primary Enmet gas detection system.)
b. Connect Houston gas detectors (both) to same circuit as primary gas detection system (to shut off all power and turn on emergency fan) AFTER they have both been recalibrated.
c. Ensure each technology has an adequate number of sensors for the flow of any flammable gases.
d. Ensure each of the gas line cabinets, that have a mixing chamber, has a gas detector (this can only be done with the arrival of the second Houston gas detection system).

TTR 15 a. Laser Experiment rack needs to be electrically bonded to ground.
b. Electrical and gas rack needs to be electrically bonded to ground.
c. Adequacy of single point ground for TTR frames, racks, etc. needs to be verified.
d. Ensure vent lines are bonded electrically to ground.
(an FSR has been submitted).

TTR 19 Ensure flammable gas lines has a flexible 3/8" high pressure line and inert gas lines remain with the 1/4" copper lines from the gas cylinders to the gas systems.

TTR 20 Ensure smoke detectors are installed (an FSR has been submitted).

TTR 21 Ensure wall penetrations meet NFPA code by sealing opening to gas pad with fire retardent material (after all anticipated lines have been installed).

Status and task completion need to be provided to Ed Verminski, who is in charge of TTR Hazard Tracking.

Your diligent attention to ensuring the proper resolution to these identified hazards is greatly appreciated.

Enclosures: TTR Hazard Tracking

Superconducting Super Collider Laboratory
2550 Beckleymeade, Mail Stop 2005
Dallas, Texas 75237-3946
(214) 708-6306

Physics Research Division - GEM ES&H Group

To: Jim Truitt

From: Richard Guthrie

Date: October 2, 1992

Re: TTR Hazard Resolution - Specific Tasks of Individuals

The purpose of this letter is to delineate the responsibilities of each of the individuals involved with the mitigation of identified hazards for the TTR Laboratory. Enclosed, you will find a copy of the TTR Hazard Tracking forms.

This memo should help to avoid confusion and to ensure that these mitigating tasks are followed through to completion.

The tasks identified for your action are as follows:

TTR 2 — Ensure number and location of fire extinguishers meets code. An additional fire extinguisher is to be added to the computer room and two of the extinguishers need to be relocated (an FSR has been submitted).

TTR 6 — Ensure parking spaces are marked off as "NO PARKING." (an FSR has been submitted)

TTR 7 — Ensure goggles are available to all personnel on the Laser Experiment (goggles are on order).

TTR 8 — a. Laser Experiment rack needs to be electrically bonded to ground.
b. Electrical and gas rack needs to be electrically bonded to ground.
c. Adequacy of single point ground for TTR frames, racks, etc. needs to be verified.
d. Ensure vent lines are bonded electrically to ground.
(an FSR has been submitted).

TTR 9	Closed.
TTR 10	Move fire extinguishers to an accessible location (an FSR has been submitted).
TTR 11	Ensure pacemaker signs are installed on all four sides of the TTR (signs are on order).
TTR 12	Ensure high voltage signs are prominently and securely installed on any technology in the staging area (signs are on order).
TTR 15	a. Laser Experiment rack needs to be electrically bonded to ground. b. Electrical and gas rack needs to be electrically bonded to ground. c. Adequacy of single point ground for TTR frames, racks, etc. needs to be verified. d. Ensure vent lines are bonded electrically to ground. (an FSR has been submitted).
TTR 20	Ensure smoke detectors are installed (an FSR has been submitted).
TTR 21	Ensure wall penetrations meet NFPA code by sealing opening to gas pad with fire retardent material (after all anticipated lines have been installed).
TTR 22	Perform a sound level survey of the TTR Laboratory with the air conditioners in operation (request for assistance from Mary Keen has been submitted).

Status and task completion need to be provided to Ed Verminski, who is in charge of TTR Hazard Tracking.

Your diligent attention to ensuring the proper resolution to these identified hazards is greatly appreciated.

Enclosures: TTR Hazard Tracking

Superconducting Super Collider Laboratory
2550 Beckleymeade, Mail Stop 2005
Dallas, Texas 75237-3946
(214) 708-6306

Physics Research Division - GEM ES&H Group

To: Mary Keen

From: Richard Guthrie

Date: October 2, 1992

Re: TTR Hazard Resolution - Specific Tasks of Individuals

The purpose of this letter is to delineate the responsibilities of each of the individuals involved with the mitigation of identified hazards for the TTR Laboratory. Enclosed, you will find a copy of the TTR Hazard Tracking forms.

This memo should help to avoid confusion and to ensure that these mitigating tasks are followed through to completion.

The tasks identified for your action are as follows:

TTR 22 Perform a sound level survey of the TTR Laboratory with the air conditioners in operation (request for assistance from Mary Keen has been submitted).

Status and task completion need to be provided to Ed Verminski, who is in charge of TTR Hazard Tracking.

Your diligent attention to ensuring the proper resolution to these identified hazards is greatly appreciated.

Enclosures: TTR Hazard Tracking

Superconducting Super Collider Laboratory
2550 Beckleymeade, Mail Stop 2005
Dallas, Texas 75237-3946
(214) 708-6306

Physics Research Division - GEM ES&H Group

To: Cas Milner

From: Richard Guthrie

Date: October 2, 1992

Re: TTR Hazard Resolution - Specific Tasks of Individuals

The purpose of this letter is to delineate the responsibilities of each of the individuals involved with the mitigation of identified hazards for the TTR Laboratory. Enclosed, you will find a copy of the TTR Hazard Tracking forms.

This memo should help to avoid confusion and to ensure that these mitigating tasks are followed through to completion.

The tasks identified for your action are as follows:

TTR 14

a. Ensure Houston gas detection (a second Houston gas detection system is on order) is recalibrated to 20% LEL (Currently, Houston system is calibrated at less than 10% LEL. This will cause a nuisance factor...especially when the Houston gas system is connected to the primary Enmet gas detection system.)
b. Connect Houston gas detectors (both) to same circuit as primary gas detection system (to shut off all power and turn on emergency fan) AFTER they have both been recalibrated.
c. Ensure each technology has an adequate number of sensors for the flow of any flammable gases.
d. Ensure each of the gas line cabinets, that have a mixing chamber, has a gas detector (this can only be done with the arrival of the second Houston gas detection system).

Status and task completion need to be provided to Ed Verminski, who is in charge of TTR Hazard Tracking.

Your diligent attention to ensuring the proper resolution to these identified hazards is greatly appreciated.

Enclosures: TTR Hazard Tracking

Superconducting Super Collider Laboratory
2550 Beckleymeade, Mail Stop 2005
Dallas, Texas 75237-3946
(214) 708-6306

Physics Research Division - GEM ES&H Group

To: Ed Verminski

From: Richard Guthrie

Date: October 2, 1992

Re: TTR Hazard Resolution - Specific Tasks of Individuals

The purpose of this letter is to delineate the responsibilities of each of the individuals involved with the mitigation of identified hazards for the TTR Laboratory. Enclosed, you will find a copy of the TTR Hazard Tracking forms.

This memo should help to avoid confusion and to ensure that these mitigating tasks are followed through to completion.

The tasks identified for your action are as follows:

TTR 2 — Ensure number and location of fire extinguishers meets code. An additional fire extinguisher is to be added to the computer room and two of the extinguishers need to be relocated (an FSR has been submitted).

TTR 5 — Ensure exit signs showing a proper egress from the east side of the TTR Laboratory are installed (an FSR has been submitted).

TTR 11 — Ensure pacemaker signs are installed on all four sides of the TTR (signs are on order).

TTR 12 — Ensure high voltage signs are prominently and securely installed on any technology in the staging area (signs are on order).

TTR 13 — Ensure all the draft TTR procedures are approved (copies of each draft procedure is provided).

TTR 14 a. Ensure Houston gas detection (a second Houston gas detection system is on order) is recalibrated to 20% LEL (Currently, Houston system is calibrated at less than 10% LEL. This will cause a nuisance factor...especially when the Houston gas system is connected to the primary Enmet gas detection system.)
b. Connect Houston gas detectors (both) to same circuit as primary gas detection system (to shut off all power and turn on emergency fan) AFTER they have both been recalibrated.
c. Ensure each technology has an adequate number of sensors for the flow of any flammable gases.
d. Ensure each of the gas line cabinets, that have a mixing chamber, has a gas detector (this can only be done with the arrival of the second Houston gas detection system).

TTR 16 a. Ensure emergency procedures includes guidance to security as to what actions are to be done during non-working hours should an alarm activate.
b. Ensure all the draft TTR procedures have approval.

TTR 17 Ensure there is documentation and authority to release gases into the atmosphere.

TTR 18 Ensure evacuation routes are accurate and posted as appropriate.

TTR 20 Ensure smoke detectors are installed (an FSR has been submitted).

Status and task completion for all TTR hazards have been referred to you.

Enclosures: TTR Hazard Tracking
GEM-TN-92-152, TTR Emergency Procedures
GEM-TN-92-153, TTR Start Up Procedure for Test Chambers
GEM-TN-92-154, TTR Purging Procedure for Test Chambers
GEM-TN-92-155, TTR Leak Check Procedure for Test Chambers
GEM-TN-92-156, Laser Operation Procedures for the TTR
GEM-TN-92-157, TTR Maintenance Procedures
GEM-TN-92-158, Gas Emission Tracking Procedures for the Texas Test Rig Laboratory
GEM-TN-92-159, TTR Shut Down Procedure for Test Chambers
GEM-TN-92-160, TTR Change Over Procedure for Test Chambers

Superconducting Super Collider Laboratory
2550 Beckleymeade, Mail Stop 2005
Dallas, Texas 75237-3946
(214) 708-6306

Physics Research Division - GEM ES&H Group

To: Ed Verminski

From: Richard Guthrie

Date: October 2, 1992

Re: Texas Test Rig (TTR) Hazard Tracking

The TTR Laboratory has successfully passed the safety readiness review. Tom Murphy is currently drafting a letter to this effect. The TTR Safety Evaluation (SE) will then be given to Gena Mitselmakher and Fred Gilman for their signatures.

Per SSC Laboratory Practice DMP-000003, Rev. A, Hazard Reporting, Hazard Tracking, and Risk Resolution, it is the responsibility of the Division Safety Lead to provide hazard tracking within an SE. It is also his responsibility to provide tracking to any hazards identified after the SE is approved.

Within the scope and intent of DMP-000003, I am enclosing a hard copy and a software file copy of the 22 TTR hazards that were not resolved during the readiness review. There were no "Show Stoppers" identified by the team. Several of the hazards have already been mitigated; others will be resolved shortly.

The tracking form provided details what work needs to be accomplished. I have also identified the person who should be responsible for assuring the task(s) has been completed. Specific tasks that remain for the mitigation of each identified hazard is provided.

Work has been initiated on each of these hazard mitigating actions. All responsible parties have been informed as to their role in closing out these open hazards.

Attachments:
- TTR Safety Evaluation, GEM-TN-92-151
- TTR Laboratory SE Supporting Documents, # TBD
- TTR Hazard Tracking (hard copy and software copy)
- 5 ea. - TTR Hazard Resolution - Specific Tasks of Individuals