GEM TN-92-187

Optimization of the GEM Integrated Noble Liquid Calorimeter

The Noble Liquid Calorimeter Group

September 23, 1992

Abstract:

In this note we present a variation of the Integrated Noble Liquid Calorimeter design. It is not meant to be the final optimization but rather as a step along the way that will result in the best calorimeter GEM can build within certain constraints.

GEM-TN-92-187
Sept. 23, 1992

Optimization of The GEM Integrated Noble Liquid Calorimeter

The Noble Liquid Calorimeter Group

Introduction

In this note we present a variation of the Integrated Noble Liquid Calorimeter design. It is not meant to be the final optimization but rather as a step along the way that will result in the best calorimeter GEM can build within certain constraints.

We were motivated towards this approach by a comment from the PAC report which stated: "The calorimetric requirements of instrumenting the last several lambda should be examined." From the point of view of calorimetry, 8-10 λ is sufficient to measure the highest p_T jets and missing E_T[1]. From the point of view of the muon system, Roger McNeil has recently done some relevant calculations. He showed that a 9λ active calorimeter with an additional 3λ passive with $\Delta E/E(EM) = 20\%/\sqrt{E}$ would lead to a lower error on the muon momentum than a calorimeter with 12λ active if the latter had $\Delta E/E(EM) = 35\%/\sqrt{E}$.

There are many inherent strengths in an integrated design. The components are radiation resistant even in the forward direction, the forward calorimeter uses a technique which has made the most progress in terms of simulation, and design[2]; the dead material between the EM and hadronic sections is minimized; and the services (pumps, cryogenic and vacuum lines, feedthroughs) are at the outside where there is more room and less physics impact. But probably most important is that it allows the maximum flexibility for optimizing the overall calorimeter system.

The optimization of the EM part of the calorimeter as well as the question of preradiator is now being given attention with a task force headed by Bob McCarthy from Stony Brook. The goals of the task force are to optimize the energy resolution, π^0 and multiphoton rejection, and photon pointing. Already at this stage we can make some fairly general statements about the possible solutions and their implications on the design. Solutions are being explored that would increase the transverse and/or longitudinal segmentation. Therefore, all of these solutions require more signals to be brought out of the cryostat - more feedthroughs. A preradiator ($\approx 1mm$ strips at 3-4 X_o) would require even a much larger number of channels.

Variation of the Baseline Design

These considerations led us to the following design shown in Fig. 1. The active volume of the calorimeter is reduced from 12 $\lambda(15\lambda)$ at $\eta = 0(3)$ to $9(11)\lambda$. The same total depth of absorber is kept, but a support tube outside the active calorimeter replaces the last 3 λ of the baseline. The fabrication of the EM and hadron modules are the same as in the full baseline design, however, the last modules in the barrel and the last layers in the endcaps are replaced by passive supports. Fig. 2 shows how the services and cabling pass through the support tube in non-projective ports. A removable plug at the top of the tube allow the large diameter pipes to enter the central detector support. Bumpers are used between the cold vessel and the vacuum vessel to reduce the thickness of the head walls. Some details of the flanges and feedthroughs are pictured in Fig. 3 for the barrel and in Fig. 4 for the endcap and integrated forward calorimeter. A semi-circular weld flange incorporates a backing bar into its design to meet ASME requirements. The support scheme is given in Fig. 5. Note that since the space for the cold support can intrude into the support tube, the design of the support of the cold mass is simpler than in the baseline. Rails are built into the support tube in this variation, whereas in the baseline the fixtures for moving the vessels into place are separate devices. The support tube may be divided into two parts with a horizontal split if this is advantageous to allow each of the three cryostats to be placed onto the support from above. It also can be in one or three pieces along the z (beam) axis direction. Fig. 6 shows the case of three pieces in z with bolts holding the endcap support tube to the barrel support tube.

Advantages

1) Totalcost savings range from \$15-20M. Table 1 gives an estimate of this design which is \$92.5M compared to the baseline estimate of \$101M. This comes about from the conversion of active calorimeter mass into the support tube in addition to a reduction in the cryostat costs. There is an additional savings of at least a few \$ M from the reduction in the krypton volume just in the cost of the krypton. We did not yet estimate the changes in the cryogenic plant and purification system due to the smaller volume. This cost savings can be used to partially offset the higher granuarilty in the EM.

2) Cryostat size is smaller. Since the radius is smaller than the SLD magnet which was made in Japan, this GEM cryostat could be fabricated off-shore. This smaller radius leads to thinner heads which means less dead material between the central and endcap regions.

3) Installation is simplified. The outer steel tube can be more easily attached to the central support frame. The support of the endcap can be accomplished with either a continuous outer steel tube or by dividing the tube into 3 pieces. There is more space for the cryostats in this design which allows the use of boltable flanges which reduces the amount of welding.

4) A major advantage of this design is the decoupling of the barrel from the endcap. In the baseline, the endcap is hung on the barrel. This places constraints on the endwalls

of the barrel. In this design the outer tube functions as the support, which allows each cryostat to be separately optimized. There are several options for the support tube but in any case, it is expected to reduce the time required to access the tracker compared to the baseline.

5) The borated polyethylene between the calorimeter and the muon chambers could be incorporated onto the outer tube eliminating a separate support system for it.

Disadvantages

1) No veto on late developing showers. This could affect missing E_T. A solution will be to rely on the occupancy of the muon chambers. In HELIOS a strong corellation between the energy in the veto calorimeter and the multiplicity in the first layer of the muon chambers was found.

2) Catastrophic energy losses by muons in the support tube. However, Roger McNeil has included this in his calculation. At energies below 100 GeV the muon resolution depends more on the energy resolution of the calorimeter than the fact that the resolution is below 1 % and does not depend too much on the calorimeter resolution. Above 500 GeV, the 3λ passive layer adds about 0.25% to the muon resolution, on the average, which is much smaller than the momentum resolution of the muon spectrometer.

Appendix: Noise in the Hadron Calorimeter

There are two contributions to the noise: thermal and pileup as discussed by Cleland et al.[3]. The use of krypton in the hadron calorimeter improves the already good performance of liquid argon. The thermal noise is reduced and therefore the pileup noise can be reduced (compared to argon) due to shorter effective shaping time. These two contributions are shown in Fig. 7. The total noise for a 0.08×0.08 cell in the first hadronic section is 130 MeV. The strategy for finding isolated photons is to first select the photon. The timing precision of the photon is determined to $5GeV \cdot ns$ for 5×5 towers (for 1 tower it is $1GeV \cdot ns$). This easily allows the determination of the correct bunch crossing. Then the hadron cells can be searched in the appropriate bucket. As in the analysis of T. Skwarnicki in the $H \rightarrow \gamma\gamma$ task force, cells above a threshold would then be added together.

We would like to again point out that to apply an isolation requirement for photons, we are looking for clusters of the order of 1 GeV. If we compare the performance of an "ideal" calorimeter with $100\%/\sqrt{E}$ to the liquid krypton hadron calorimeter with expected performance of $50\%/\sqrt{E}$ even including noise, we still get better resolution at 1 GeV for the krypton calorimeter. This is due to the fact that the stochastic term dominates at 1 GeV.

Bibliography

[1] FNAL-SDC Simulation group (D. Green, et al.),DEPTH REQUIREMENTS IN SSC CALORIMETERS. FERMILAB-FN-570, Aug 1991. 36pp.

[2] John Rutherfoord, GEM Forward Calorimetry - General Description of Liquid Argon Option, GEM-TN-92-188.

[3] W. Cleland et al., Proceedings of the Symposium on Detector Research and Development for the Superconducting Super Collider, Oct. 15-18, 1990, Fort Worth, Texas, 382(1991).

Liquid Argon (9x11 Lambda) Calorimeter Summary WBS

	Engr/ Design ($k)	M&S ($k)	Inspec/ Admin ($k)	Proc/ Fab ($k)	Assy ($k)	Instl ($k)	Cont. ($k)	WBS Total ($k)
LAr Calorimeter:	13,194	1,330	3,846	35,795	15,989	995	20,335	92,484
Research & Devel.	1,154	124	369	3,540	1,514	89	1,915	8,704
Concep./Prelim. Design	1,051	53	0	0	0	0	171	1,274
Construction	10,990	1,153	3,477	33,255	14,475	906	18,249	82,505
Modules	2,963	148	1,797	15,350	9,309	0	9,447	39,014
Barrel EM	217	11	261	4,368	1,353	0	2,865	9,075
Barrel Hadronic	679	34	604	3,272	3,127	0	1,871	9,586
Endcap EM	217	11	107	3,213	557	0	1,914	6,019
Endcap Hadronic	1,850	93	825	4,497	4,273	0	2,798	14,335
Cryostat	1,339	67	71	2,416	452	0	1,587	5,932
Barrel Argon Vessel	298	15	9	215	57	0	154	748
Barrel Vacuum Vessel	64	3	4	78	28	0	40	217
Endcap Argon Vessel	334	17	10	204	58	0	156	778
Endcap Vacuum Vessel	115	6	6	81	37	0	61	305
Supports	34	2	3	211	17	0	66	333
Feedthrus	494	25	39	1,627	257	0	1,110	3,551
Calorimeter Assy.	2,282	114	391	1,974	1,428	0	1,659	7,848
Tooling/Fixtures	1,261	63	39	3,711	145	0	1,412	6,631
Stacking Fixtures	217	11	0	878	0	0	286	1,392
Cryostat Assy Fixtures	341	17	0	1,150	0	0	392	1,900
Lifting Fixtures	165	8	0	418	0	0	154	746
Shipping Crates	54	3	0	378	0	0	111	546
Module Installation Fixture	97	5	0	209	0	0	87	398
Hadronic Fixture	76	4	0	157	0	0	66	302
Cooling Tube Layout Tool	78	4	0	105	0	0	45	231
EM Accordion Fixture	233	12	39	418	145	0	271	1,117
Test Equipment	33	2	6	470	22	0	128	661
Transportation	90	5	0	367	0	0	81	543
Cryogenic System	306	15	96	2,498	377	0	724	4,017
Equipment (above ground)	95	5	0	1,341	0	0	317	1,758
Test Beam Program	0	0	0	3,829	0	0	996	4,825
Installation/Test	288	14	50	67	0	708	293	1,421
Subsys. Mgt. & Integr.	1,831	695	901	0	1,918	98	762	6,205
SS Tube	500	25	127	1,232	825	100	842	3,651
Electronics	0	0	0	0	0	0	0	0

Note: Does not include Liquid Krypton @ $437/liter

Table 1

9 x 11 Lambda - Dimensions

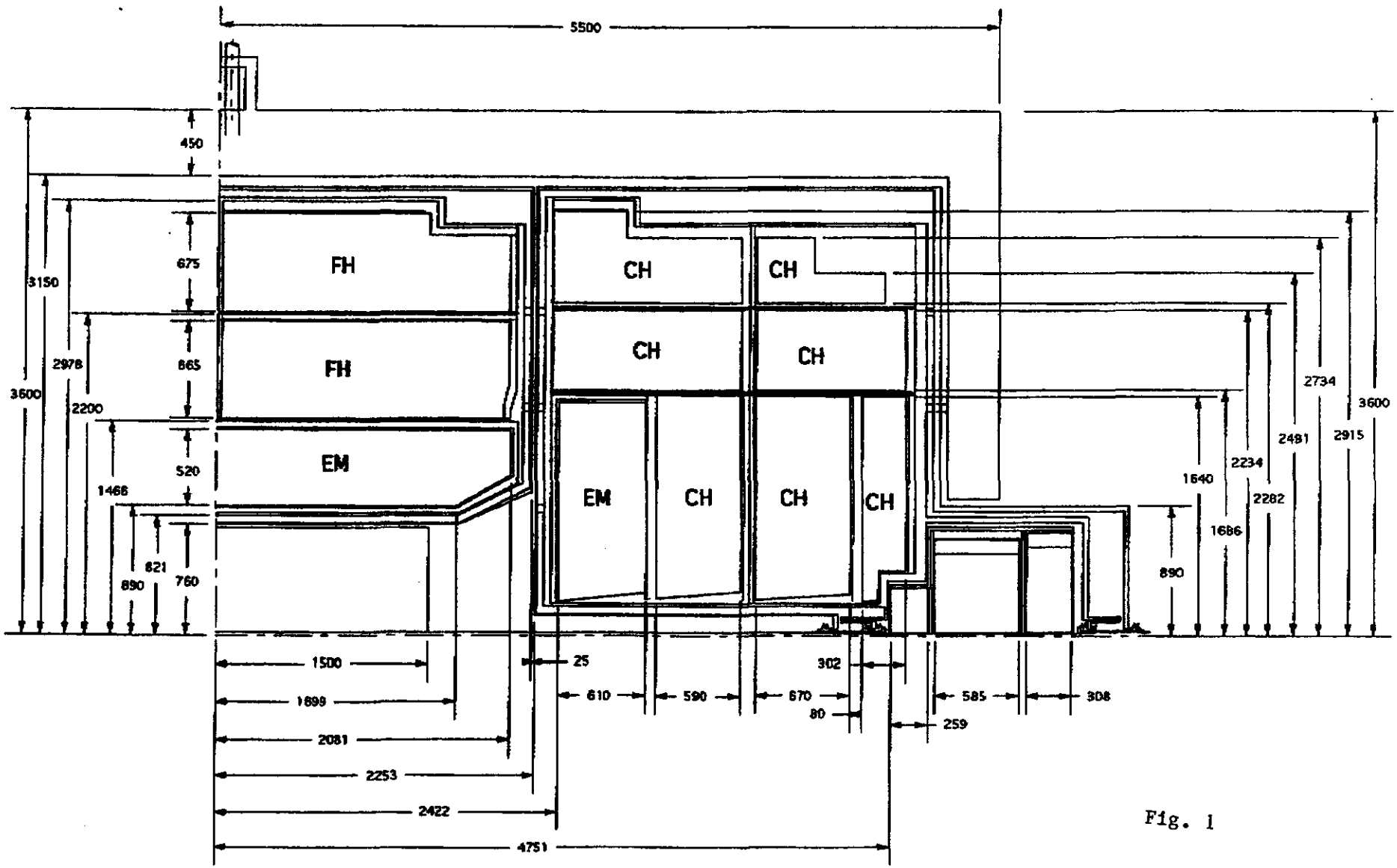

Fig. 1

K Barnstable 9x11 Config

9 x 11 Lambda Cabling and Cryogenic Access

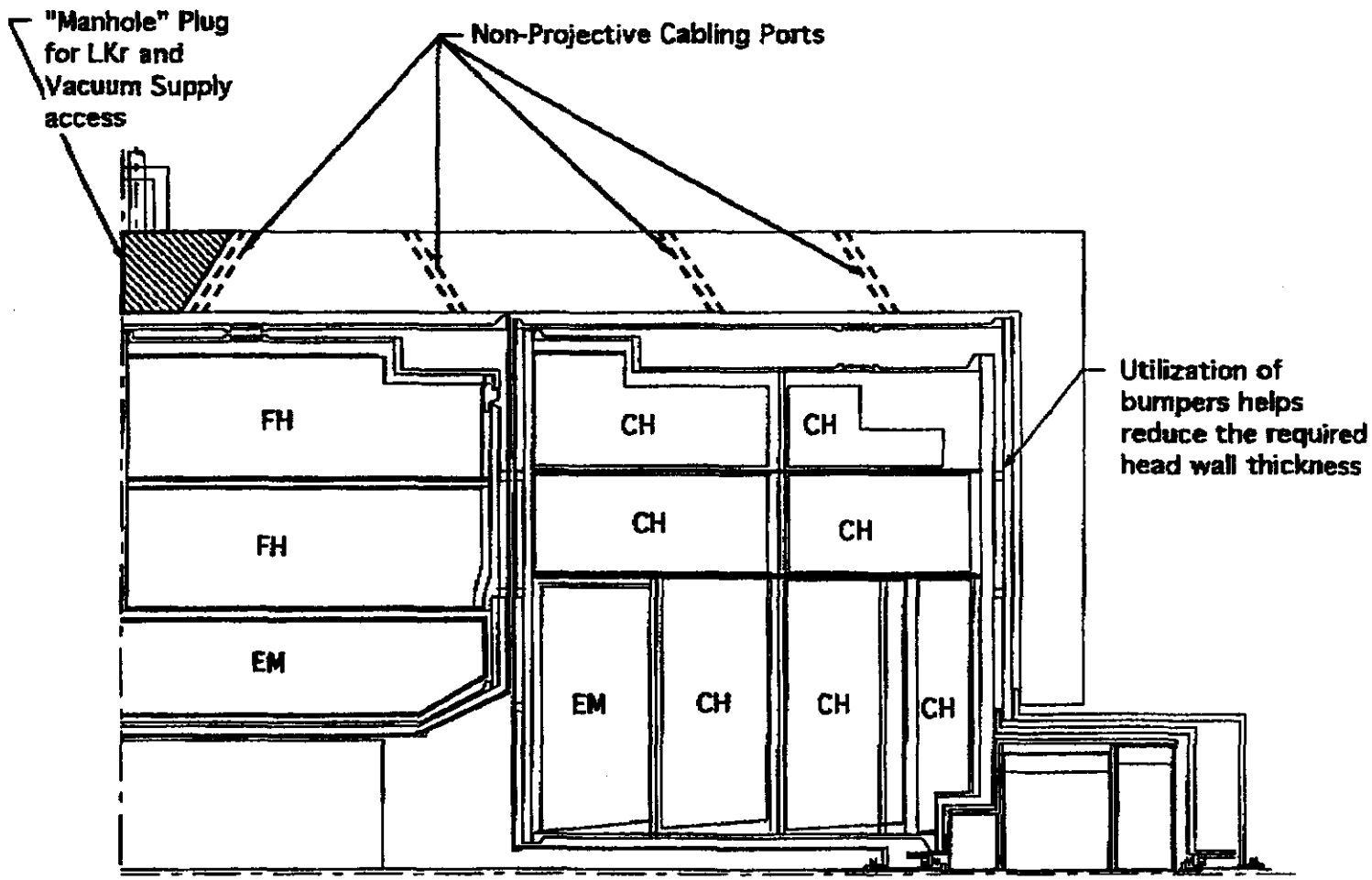

Fig. 2

K Barnstable 9x11 Config

9 x 11 Lambda - Barrel Flange Concept

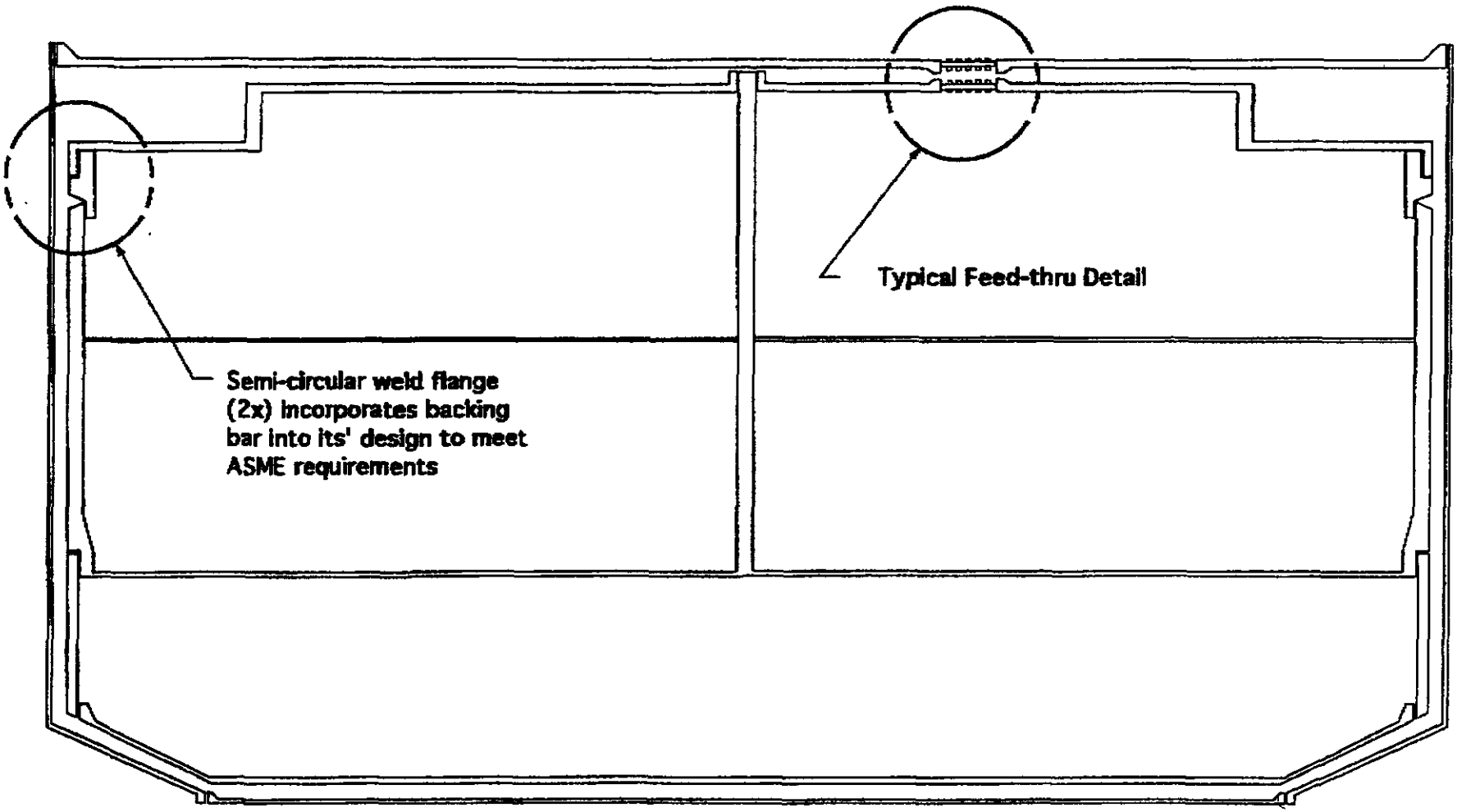

K Barnstable 9x11 Config

Fig. 3

9 x 11 Lambda - Endcap Flange Concept

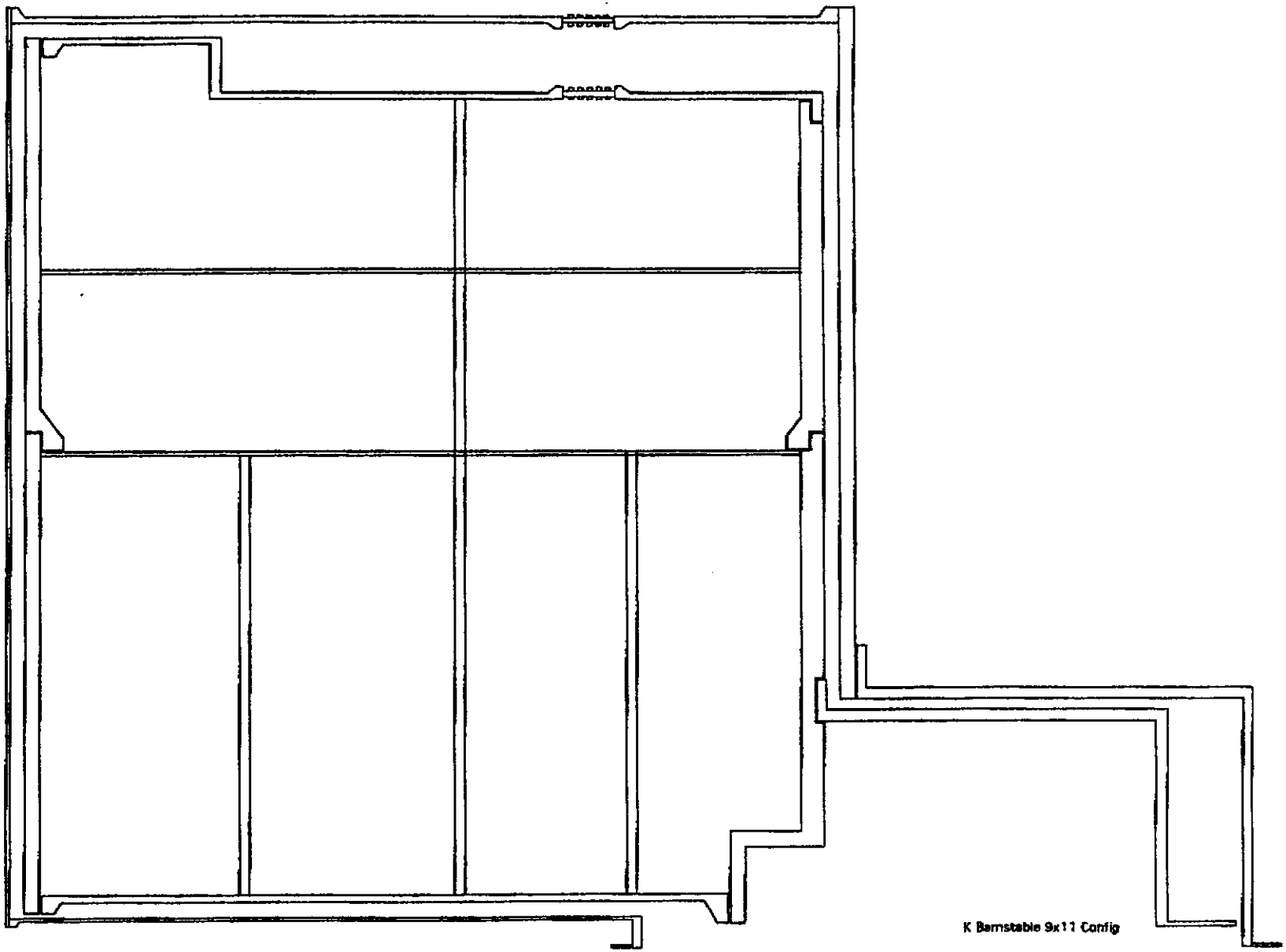

Fig. 4

9 x 11 Lambda - End View

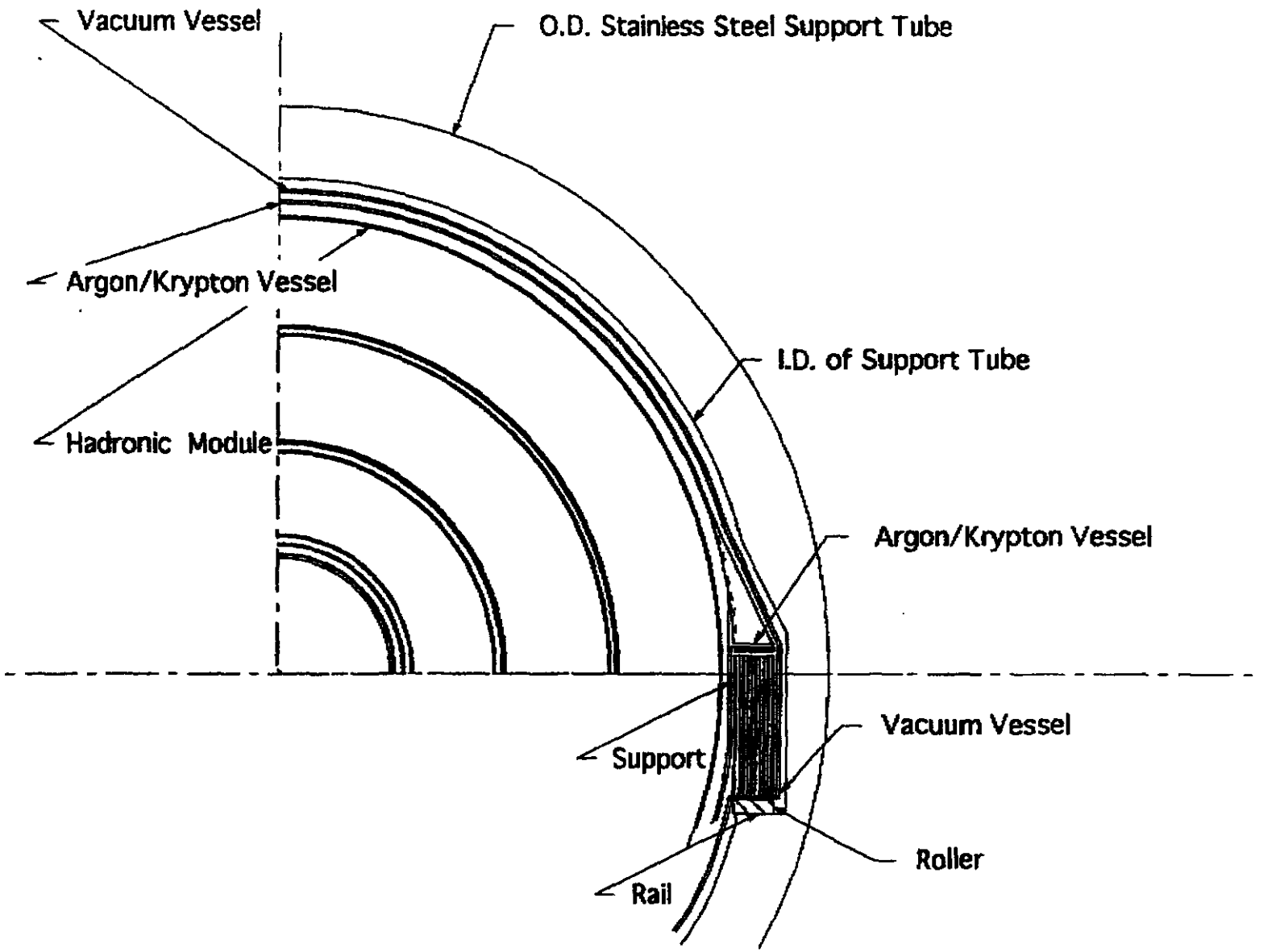

K Barnstable 9x11 Config

Fig. 5

Barrel and Endcap Tubes

Without a head wall to smear the endcap weight loads around the shell of a tube it is necessary to make the endcap support ledge at a point near the horizontal axis of the tubes. The tension fasteners are still located at the top. Alignment is achieved by shimming vertically at the ledges, with shimmed "z" direction bumpers at the top and approximately 5 and 7 o'clock.

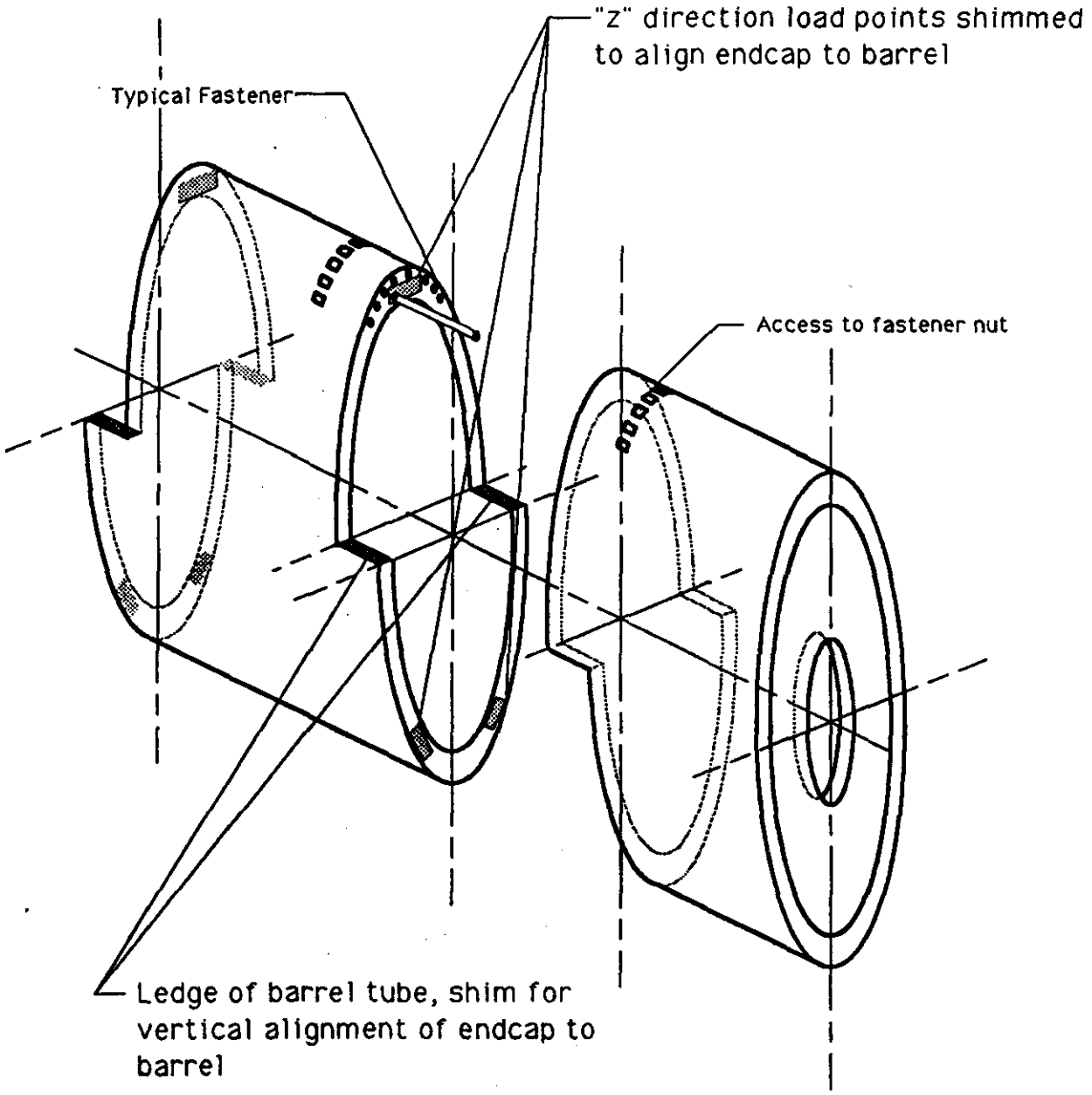

Barrel and endcap tubes

Fig. 6

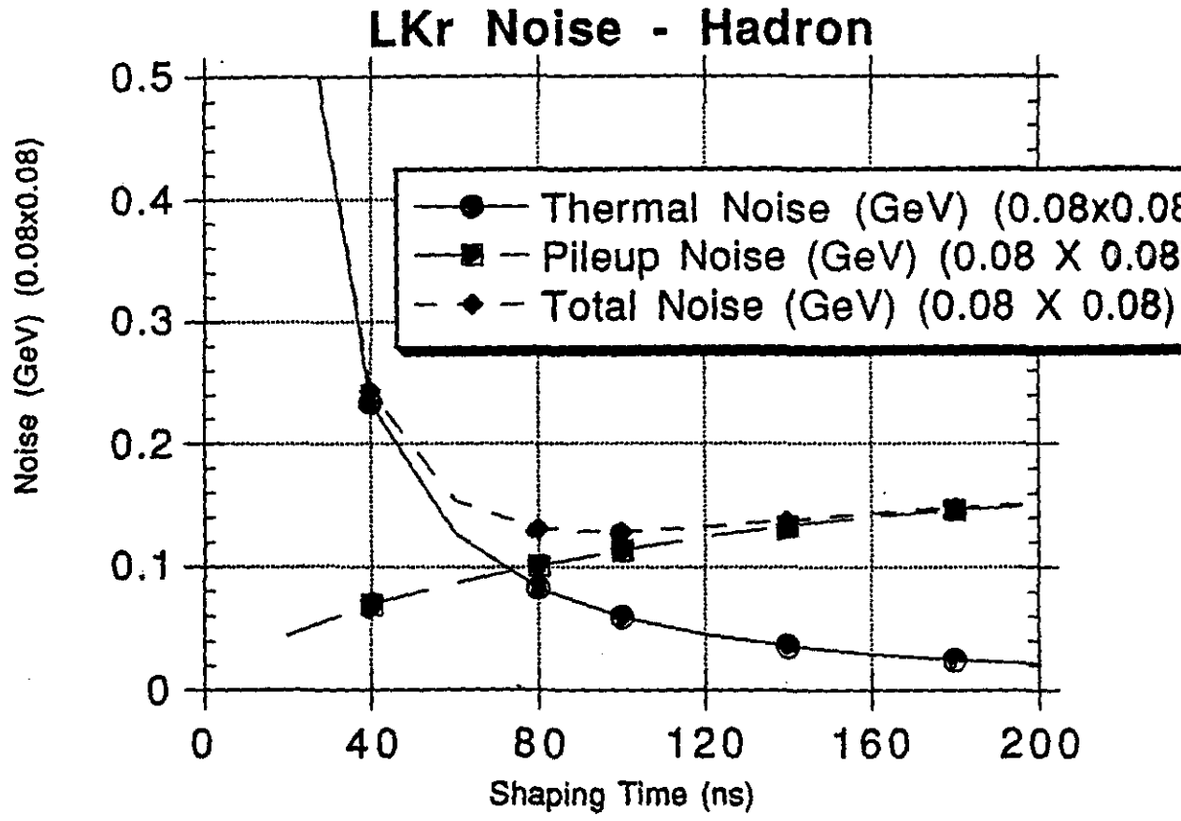
LKr Noise - Hadron
Noise (GeV) (0.08x0.08)
0.5
0.4
0.3
0.2
0.1
0
0
40
80
120
160
200
Shaping Time (ns)
Thermal Noise (GeV) (0.08x0.08
Pileup Noise (GeV) (0.08 X 0.08)
Total Noise (GeV) (0.08 X 0.08)

Fig. 7