GEM TN-92-186
Draft

Scintillating Fiber Hadron Calorimeter Calibration and Monitoring Plan

J. D. Sullivan - Massachusetts Institute of Technology
C. C. Eberle - SSC Laboratory
H. P. Paar - University of California, San Diego
D. R. Winn - Fairfield University

September 23, 1992

Abstract:

The calibration and monitoring plan for the GEM Scintillating Fiber Hadron Calorimeter covers the procurement, fabrication, assembly, and operation phases. The components to be calibrated and monitored include the copper and tungsten absorber blocks, the plastic and quartz fibers, the optics package, the PMTs, and the electronics. Many procedures, e.g., pulse injection, optical light injection, moveable radiosources, and CR muons, are used in all phases of manufacturing to insure quality control. This intercalibration and monitoring of all modules throughout the fabrication and assembly process carries over to actual operation where the same procedures are again used.

FNAL and SSC test beams are required to verify physics simulations and to characterize modules of 20 different geometries. The goal is to minimize the constant term in the energy resolution and to determine the constants needed to achieve effective compensation of the composite calorimeter. The measurements for each physics tower geometry provide complete characterization of shower shapes and measure the response (e/h) as a function of energy for electrons, pion and jets from ~ 10 GeV to 2 TeV. Although past experience shows that statistical sampling is sufficient to monitor production quality, the schedule assumes all modules will be checked in test beams to insure verification of the intercalibration.

DRAFT

DRAFT September 23, 1992 GEM-TN-92-186

Scintillating Fiber Hadron Calorimeter Calibration and Monitoring Plan

J.D. Sullivan, C.C. Eberle, H. Paar, D. Winn, ...

Abstract

The calibration and monitoring plan for the GEM Scintillating Fiber Hadron Calorimeter covers the procurement, fabrication, assembly, and operation phases. The components to be calibrated and monitored include the copper and tungsten absorber blocks, the plastic and quartz fibers, the optics package, the PMTs, and the electronics. Many procedures, e.g., pulse injection, optical light injection, moveable radiosources, and CR muons, are used in all phases of manufacturing to insure quality control. This intercalibration and monitoring of all modules throughout the fabrication and assembly process carries over to actual operation where the same procedures are again used.

FNAL and SSC test beams are required to verify physics simulations and to characterize modules of 20 different geometries. The goal is to minimize the constant term in the energy resolution and to determine the constants needed to achieve effective compensation of the composite calorimeter. The measurements for each physics tower geometry provide complete characterization of shower shapes and measure the response (e/h) as a function of energy for electrons, pion and jets from ~10 GeV to 2 TeV. Although past experience shows that statistical sampling is sufficient to monitor production quality, the schedule assumes all modules will be checked in test beams to insure verification of the intercalibration.

1 Introduction

The overall calibration program for the Scintillating Fiber Hadron Calorimeter may be broken down into three phases:

1. during the procurement and fabrication process (mainly QC&A),
2. after full assembly into (half) modules, and

3. in-situ calibration and monitoring of the complete calorimeter.

The components to be calibrated and monitored include the copper and tungsten absorber blocks, the plastic and quartz fibers, the optics package, the PMTs, and the electronics. In addition, to support physics simulation and analyses (to get the constant term and compensation at high energy), we must provide, for each physics tower geometry, a complete characterization of shower shapes and measure the response (e/h) as a function of energy for πs, js, and es from ~10 GeV to 2 TeV; this will require detailed measurements at appropriate test beams. Many procedures, e.g., pulse injection, optical light injection, moveable radiosources, and CR muons, are used in all phases of manufacturing to insure quality control. This intercalibration and monitoring of all modules throughout the fabrication and assembly process carries over to actual operation where the same procedures are again used. The general calibration scheme is discussed first and then the physics (test beam) calibration.

2 General Calibration

In general, the calibration/monitoring systems include:

Electronic pulse injection into preamplifiers (amp/ADC)

Optical LASER and LED light injection into fiber bundles (PMT/optics)

Radiosource Moveable (piezoelectric motors) Cs^{137} sources as in CDF/SDC (fibers/towers)

Physics signals cosmic ray muons, tagged muons from tracker, dijets, etc.

The electronic, optical (except LED), and radiosource will require one unit per module while the LEDs are one per physics tower (PMT).

The assembly sequence is currently envisioned as follows:

1. Manufacture mechanical towers and assemble into half barrel modules (or end cap modules) at site #1.

2. The fibers are installed and optics packages attached to individual modules at site #2. The optics package is complete through the mixer but the PMTs are swapped out before shipping from each site, i.e., the final PMTs are installed during the full barrel assembly.

3. The assembly into half calorimeters will take place at site#4 (presumably SSCL).

Calibration of some (all are included in the schedule) at site#3 (presumably FNAL as test beams at SSCL will not be available) is planned, cf. below.

2.1 QC&A

The QC&A is standard: monitor all fibers, calibrate PMTs, preamplifier/ADC, etc. All parts will be "burned in" so that "infant mortality" (e.g., of PMTs) is not anticipated to be a problem. Complete lot accountability will be maintained. Further, a sample of each major type of subassembly will be extensively tested to evaluate stability, lifetime, and detailed properties. The goal is to have 95% confidence that (all) failures will not exceed 2% in 2 years of operation at 10^{34}.

2.2 Phase 1

At site#1 as (mechanical) towers are complete, we will do "CR muon tomography" on every tower before further assembly. This will probably take 4 hours a tower once it is set up and going and can be done in parallel. After this half modules are handled individually until the full calorimeter is assembled.

2.3 Phase 2

Serious calibration begins at site#2 when the fibers and optics packages are installed and temporary PMTs (with their Silastic "cookies") and (fast) electronics are attached.[1] The principal purpose of the testing here is to verify

[1]Should sites #1 and #2 be the same then the CR tomography step can probably be eliminated.

the full integrity of each module and to allow easy cross comparison (equalizing response) among all the modules. This requires optical, radiosource, and CR muon testing. Some of these tests will require self triggering electronics. These tests form the basis for long term performance evaluation and the same tests will be routinely done. The experience from CDF is that the calibration can be held to better than 1% with a combination of optical and radiosource testing.

The schedule will permit testing every barrel (and endcap) half-module at a test beam (FNAL) before final assembly at SSCL of the full calorimeter. However, as the main purpose of the beam test is characterization for physics simulation, only a small fraction of all the modules need be tested. To provide adequate statistical monitoring of production quality and to verify the optical and radiosource calibration, it should be sufficient to test ~ten of them, e.g., numbers 1, 2, 3, 5, 8, 13, 21, and 34 of each half barrel. Of course, if a significant problem is revealed, all will be tested.

2.3.1 Radiosource calibration

Similar to CDF [1], radioactive sources capsules will be moved through narrow copper tubes mounted in groves cut diagonally across selected planes of the absorber blocks. The capsules (mounted at the end of wires) are moved by piezoelectric motors (cf. Figures ?? and ??). Each module will have its own radiosource calibration system. The radioactive source calibrates the system from fiber through electronics.

2.3.2 Light injection

Light is injected in two ways: first through an LED [2, 3, 4] mounted after the light mixer and before each PMT, and second a pulsed UV laser fed through fiber optic cables to the fiber bundle before the light mixer. Both of these have the light injected on the outer periphery. The laser will be mounted external to the PMT package (cf. Figure ??.

Time off-sets/precision and relative PMT gain will be measured during beam tests by a pulsed UV laser and fiber-optic feeds. The fiber optic cable for each PMT are driven in parallel from the laser by a multichannel fiber power splitter. The cables are fed to optical diffusers in front of the PMT, and use standard SMA type connectors (similar to JETSET development).

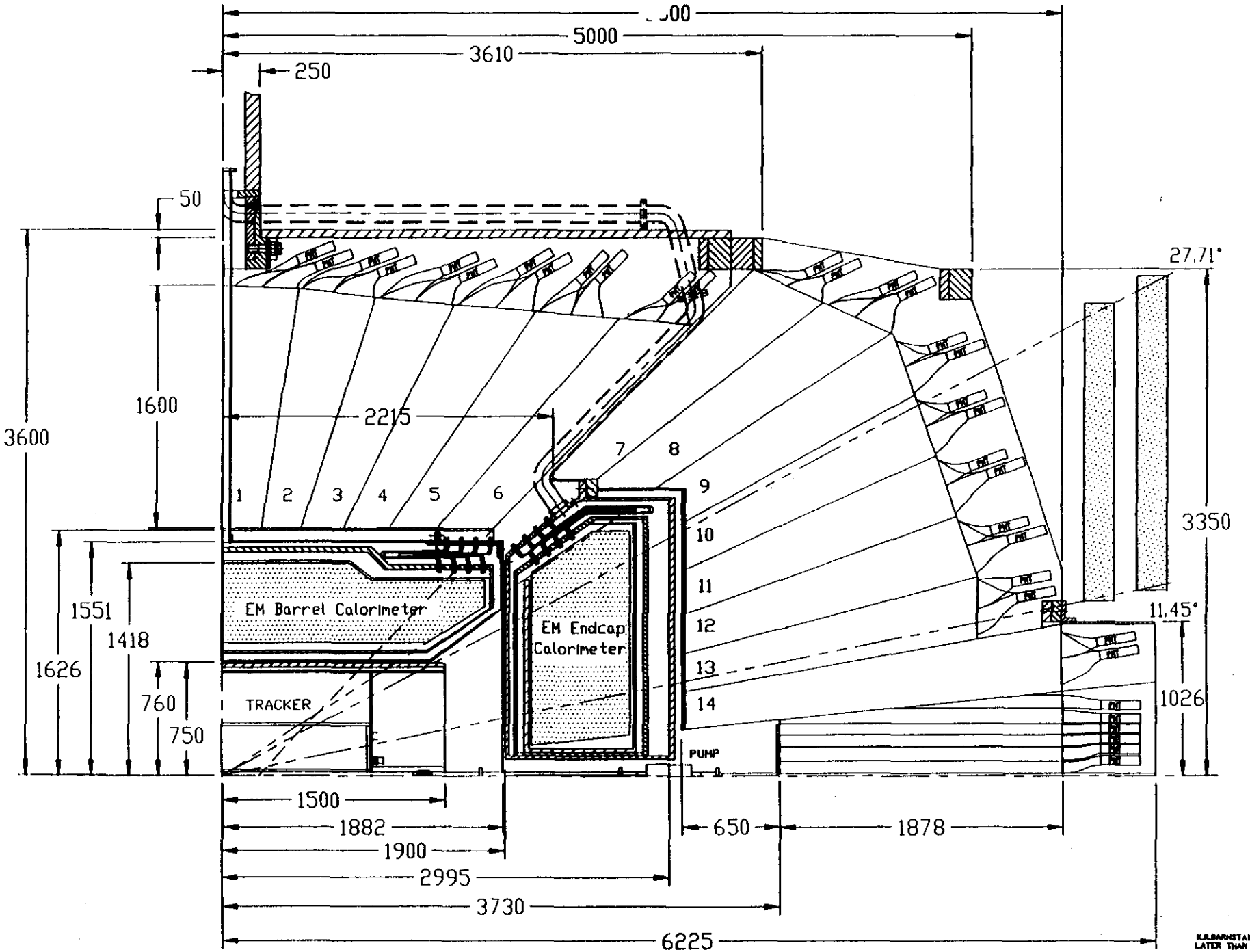

K.K.BARNSTABLE LKR EX/EN
LATER THAN 6/29/92

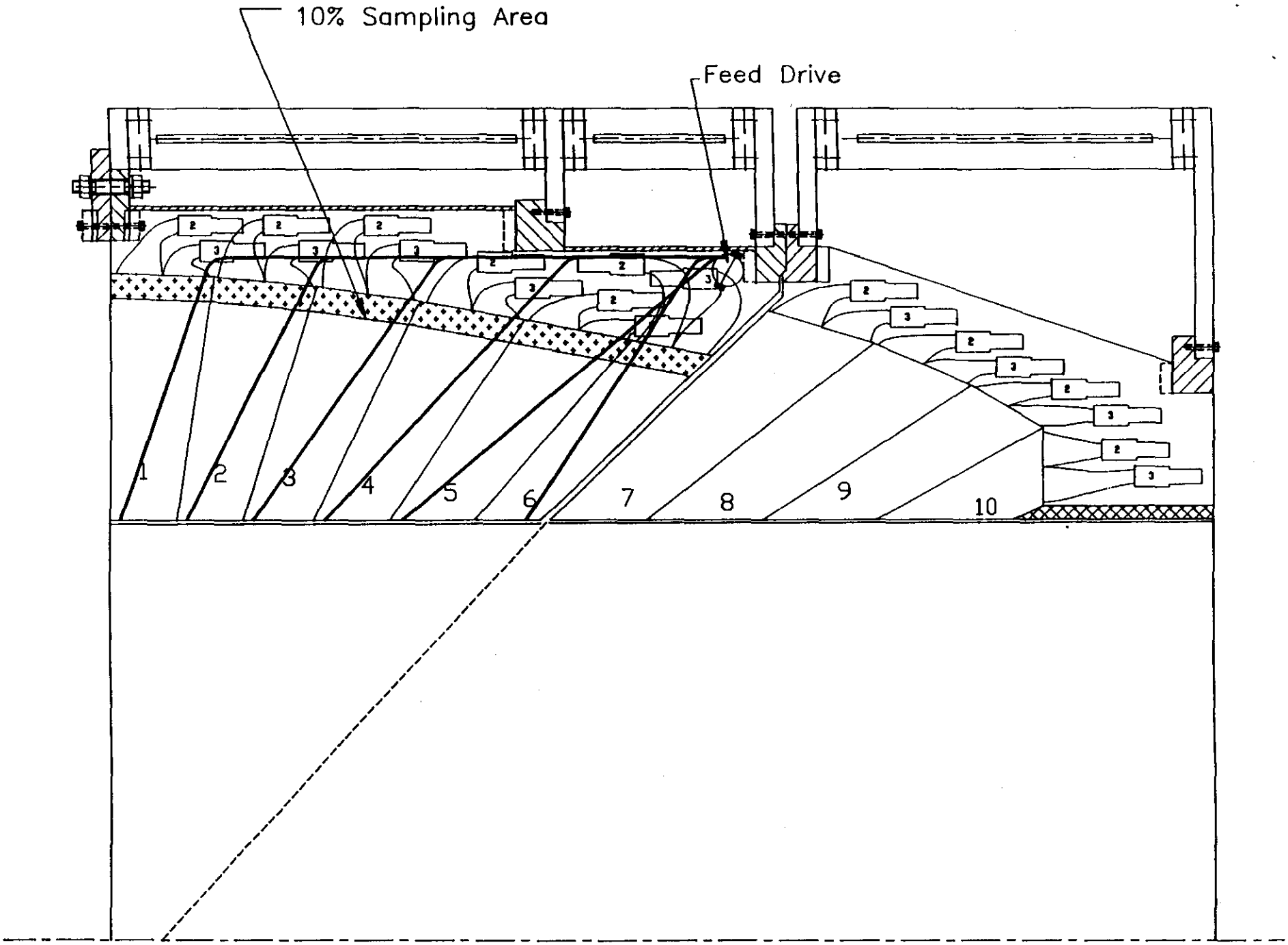
10% Sampling Area
Feed Drive
1
2
3
4
5
6
7
8
9
10

A stable Si photodiode normalizes the laser pulse energy to $\pm 0.1\%$, and finds the pulse time to 0.1 ns. Tests by CLEO at Cornell and in a neutrino experiment at the Bugey reactor have shown that this type of system can achieve an overall stability of 0.5% with systems with hundreds of PMT.

2.4 Phase 3

The main difference between phases 2 and 3 is that the half module assemblies are combined into the full calorimeter.[2] Otherwise, the full slate of calibration systems is available as enumerated above.

2.5 Overall stability

The GEM baseline PMT is a mesh dynode proximity focusing tube which is stable in magnetic fields ≥ 1 T, has a gain of $\sim 2 \times 10^5$, and has a risetime of < 3 ns. The fine mesh dynode structure extends the current range up to 1 A with 0.1% deviation and it still remains linear within 2% at 2 A. The typical temperature dependence of the gain times the quantum efficiency product is $\sim 0.5\%/°C$ for the PMTs used in ZEUS and CDF. From the extensive studies and the results of the above experiments it is clear that the stability ($< 1\%$), monitoring and calibration ($\sim 1\%$) requirements for the GEM scintillating fiber hadronic calorimeter can be met.

Because standard PMTs may have a large functional dependence of the gain on HV and of the quantum efficiency on temperature, the HV/T will be continuously recorded on each PMT by precision ADCs. However, this may well be overkill as the experience[3] at JETSET is that an EM fiber calorimeter with 300 PMTs is a "very stable system." This is based on calibration and monitoring over 2 week periods every four months using three techniques. Within a given 2 week period, the relative gain normalization was measured at 0.5 Hz by using a nitrogen laser dispersed with a prism to the front of ~ 100 fibers. The gains were normalized to $< 1.0\%$. For absolute calibration two methods were used:

[2]The test beams at SSCL come on line too late to permit testing of the half-modules in the SSCL test beams. A reference/test/spare half module will be available to test at SSCL behind an appropriate EM-section.

[3]Private communication: David Hertzog and Sarah Hughes

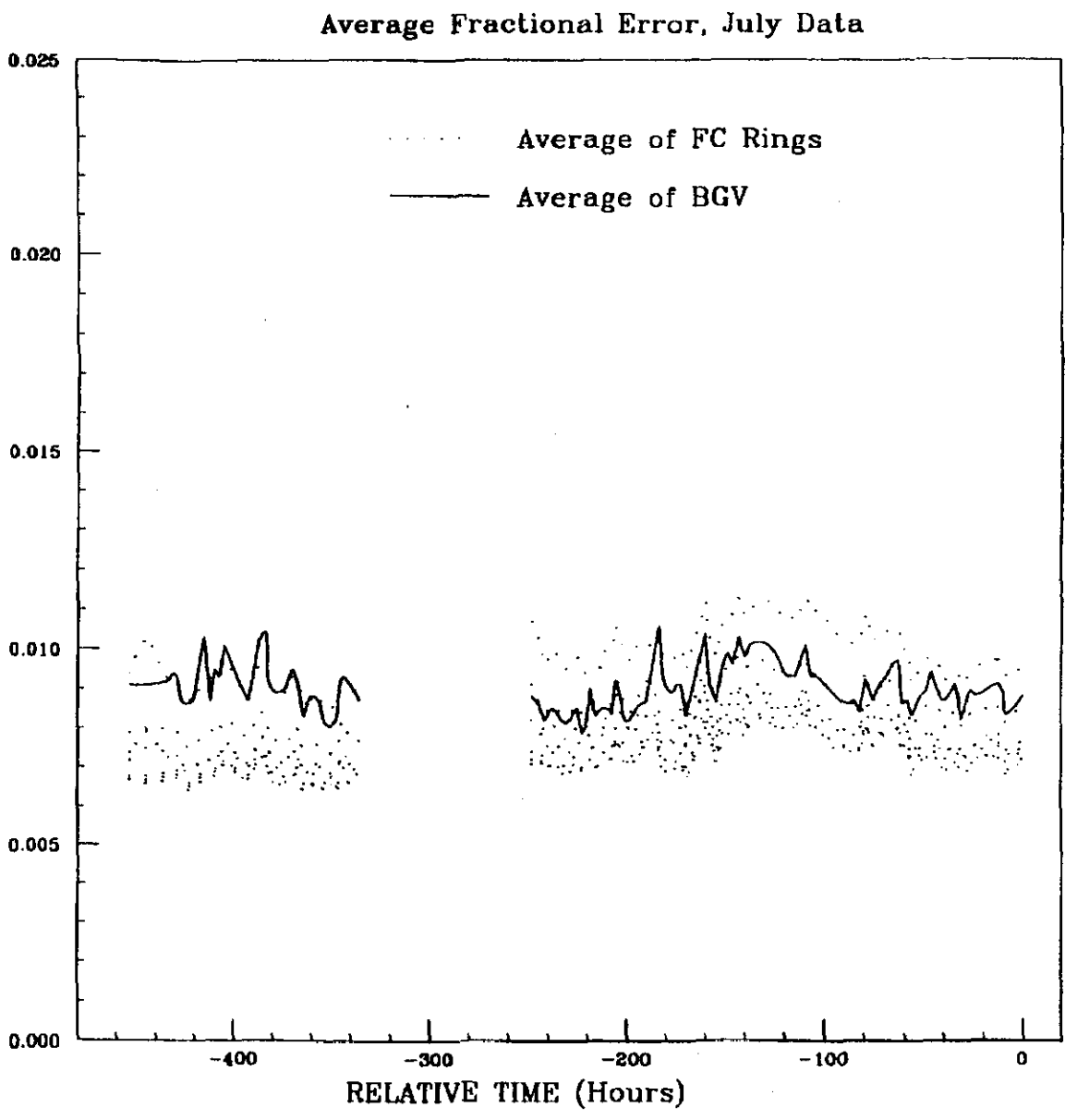

T = 0 : 29/7/91(05:29) Runs 1433–1442

1. coarsely with MIP muons and single punch throughs, and

2. finely with tuning of the π^0 peak.

The plot in Figure ?? shows the stability of 324 detectors in various groups during a relatively long run (about 500 hours). The plot shows the fractional error of the gain multiplier constants after the LASER and the MIP information was used to stabilize the system. This plot however is before using the π^0 peaks to finish the job. The error on the gain constants is a bit under a percent at this stage. The group of runs on the right represent a time when the LASER was operated at a somewhat lower voltage and as such *it* was more stable. A significant component to the errors is from the LASER. No control on temperature (the experiment was in an open bay at the PS at CERN) nor unusual control of the HV was used. Note that in July at CERN the temperature varies and as the tubes are hanging out in the air, there is a little day/night drift apparent in plots of the gains versus time. This however is not detectable in the error on these gains versus time. As an EM calorimeter is much more demanding than a hadronic one, this stability augurs well for SSCintCal.

3 Test beams

We anticipate the following needs for test beams:

- 20 GeV π-beam at 200 kHz and 50 GeV electron beam at 30 Hz to measure e/π

- 200 GeV proton beam to evaluate the constant term.

The current schedule has test beams available at SSCL starting in Jan 96 with a 30% duty cycle in summer and perhaps 50% in winter. Unfortunately, this is too late to suit the needs of the hadron calorimeter which must begin final assembly in mid 95. Therefore, it appears that beam testing during fabrication must be done elsewhere, e.g., at FNAL.

As the assembly period for the (hadron) calorimeter begins in June 95 and continues until Dec 96, a provisional schedule for the beam testing is:

1. Test modules for half-barrel #1 between Sept 94 and Mar 95

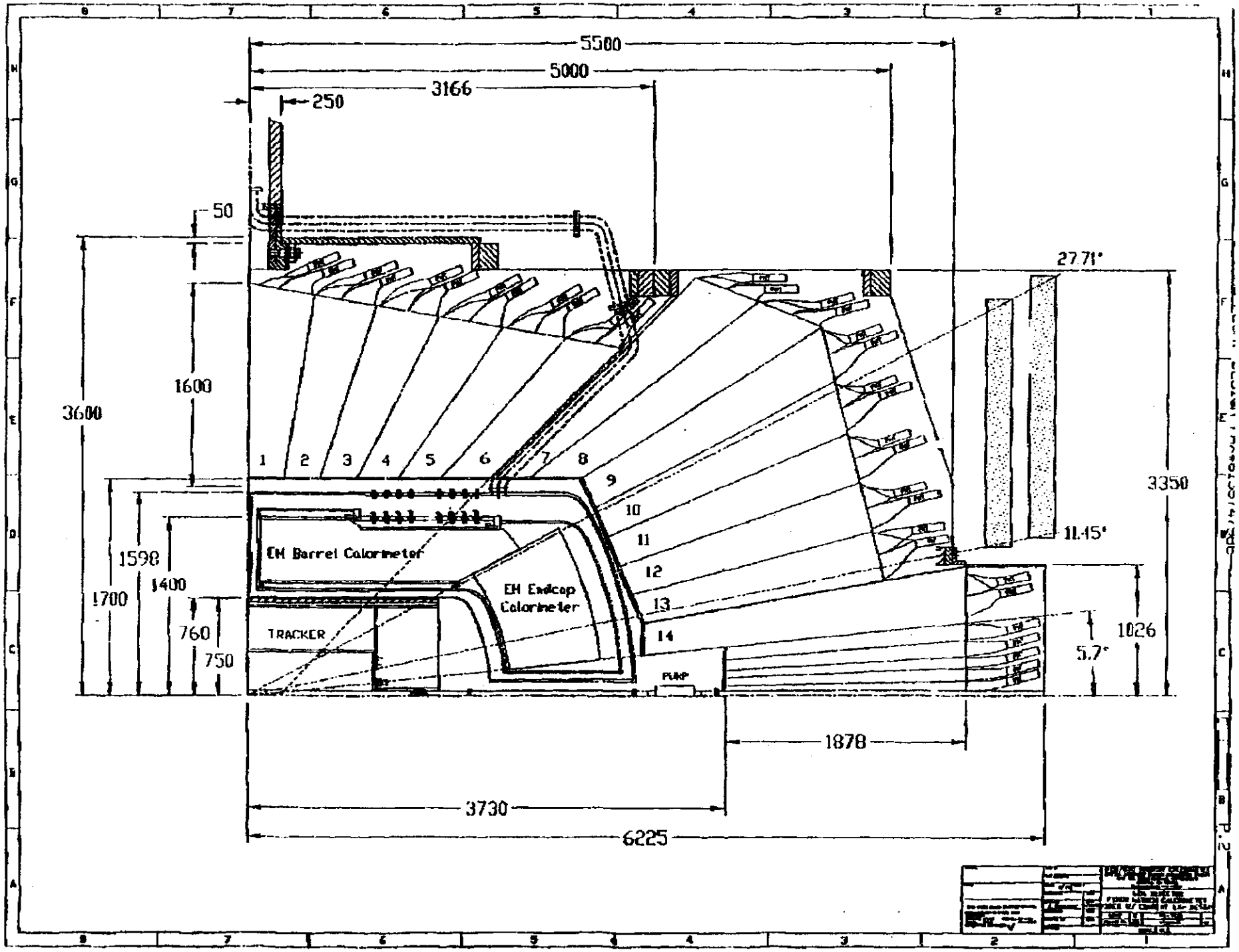
5500
5000
3166
250
50
27.71°
1600
3600
1
2
3
4
5
6
7
8
9
10
11
12
13
14
3350
11.45°
EM Barrel Calorimeter
EM Endcap Calorimeter
TRACKER
PUMP
1598
1400
1700
760
750
1026
5.7°
1878
3730
6225

2. Test modules for half-barrel #2 between Mar 95 and Sept 95
3. Test modules for endcap #1 between Sept 95 and Nov 95
4. Test modules for endcap #2 between Nov 95 and Feb 96

There are 40 modules a half barrel and 12 an endcap. Thus, there is sufficient time to test them all if required.

3.1 Ancillary requirements

To actually conduct the tests, we need need a fixture (probably 2) to hold a half module sandwiched between top and bottom fixed detector arrays. That is the tilt-table must be designed to sandwich the module to be tested between fixed, reference tower arrays. Major "bending" must be provided by two-axis tilt of the mechanical table with possible displacement if a virtual IP is required. Magnets are assumed to only provide minor bending. The positioning required is ± 1 cm (knowledge to ~ 1 mm will be provided by a beam monitor hodoscope).

Tests can be run with prototype electronics and special phototubes in order to delay the mounting of the final tubes until the calorimeter is finally assembled. Separate ADCs, etc are probably called for and a computer controlled acquisition/analysis system.

3.1.1 Landau Calibration

Because the hadron calorimeter cannot use electron pairs, during beam tests, muon energy will be measured by the beamline spectrometer, and Landaus will be recorded and analyzed to study the potential of using them for an in-situ energy calibration during data at the SSC. We note the very accurate Landaus demonstrated by the SPACAL collaboration encourage us to use this technique; they show a clear effect in dE/dx from muon energies over the range of 50–250 GeV. Sample results from SPACAL are shown in Figure ?? from [?].

3.2 EM calorimeter

Initially, a lightly instrumented mock em-calorimeter in front of the SSCint-Cal is all that is required. However, tests will ultimately require an operating

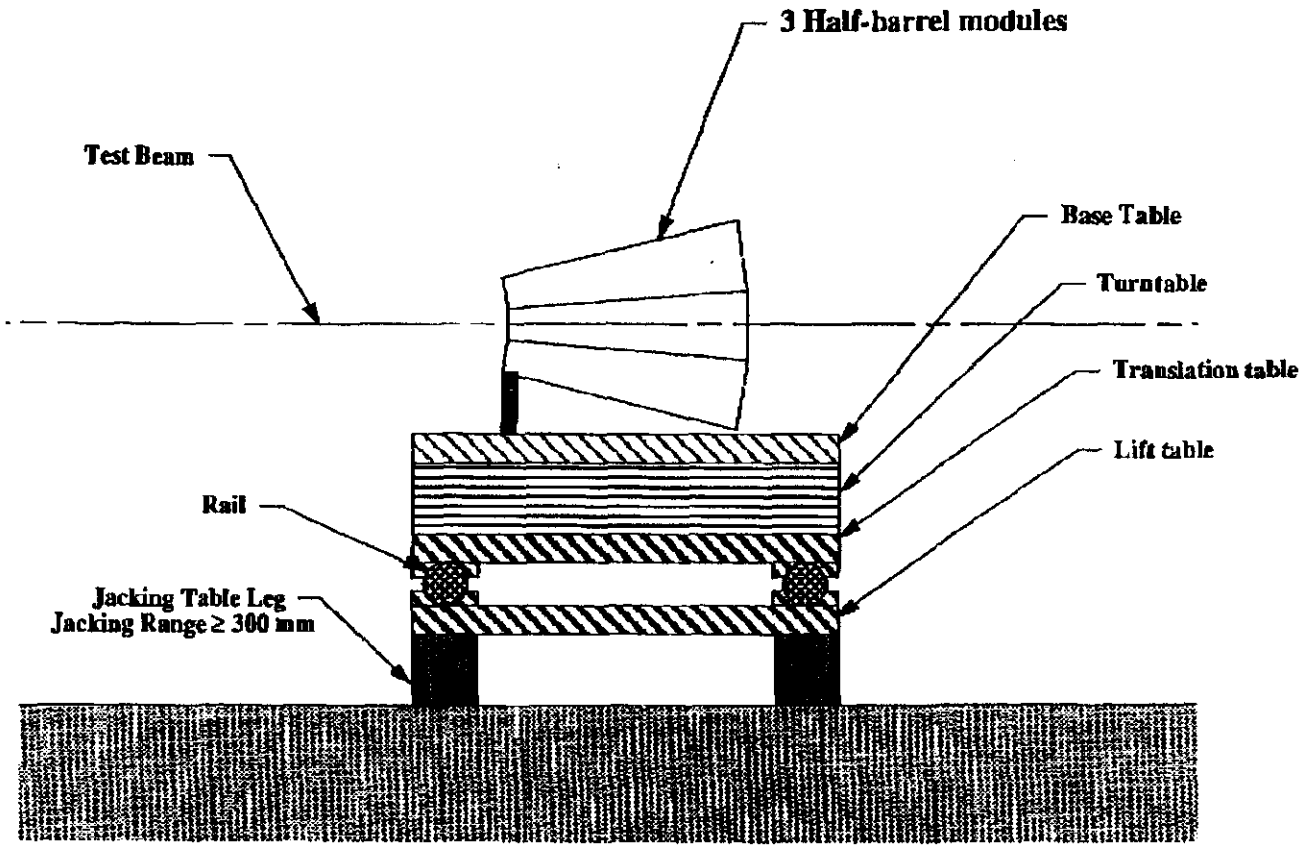

DRAFT

Elevation view

Oak Ridge National Laboratory		
Scintillating HCal Half-Barrel Beam Test Layout with Turntable		
Rev 0	ID:	SCALE 50:1
08/18/92	Drawn: C. Eberle	
P 2 of 4	Approved:	

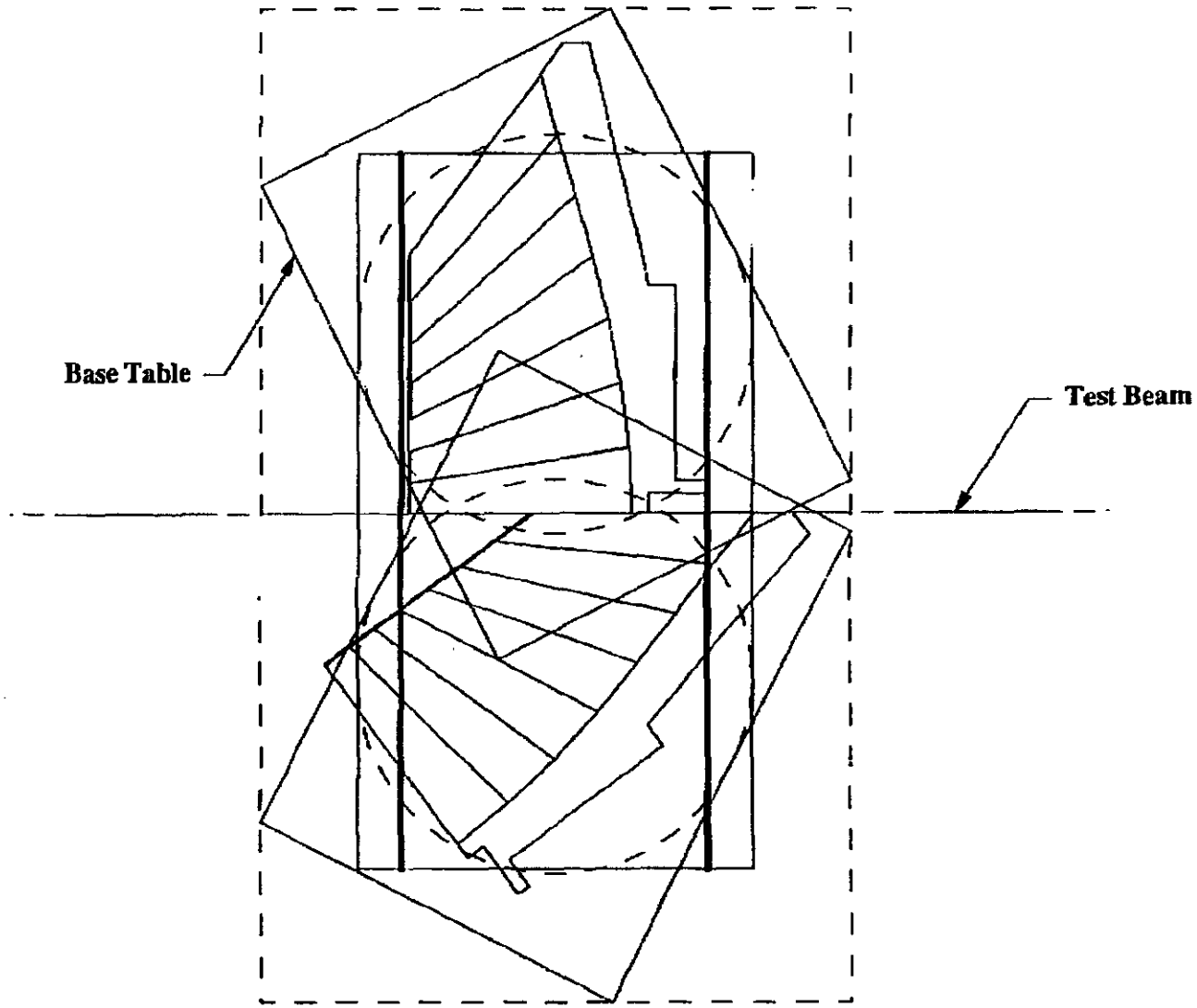

Plan View
Modules in Extreme Positions

DRAFT

Oak Ridge National Laboratory		
Scintillating HCal Half-Barrel Beam Test Layout with Turntable		
Rev 0	ID:	SCALE 50:1
08/10/92	Drawn: C. Eberle	
P 3 of 4	Approved:	

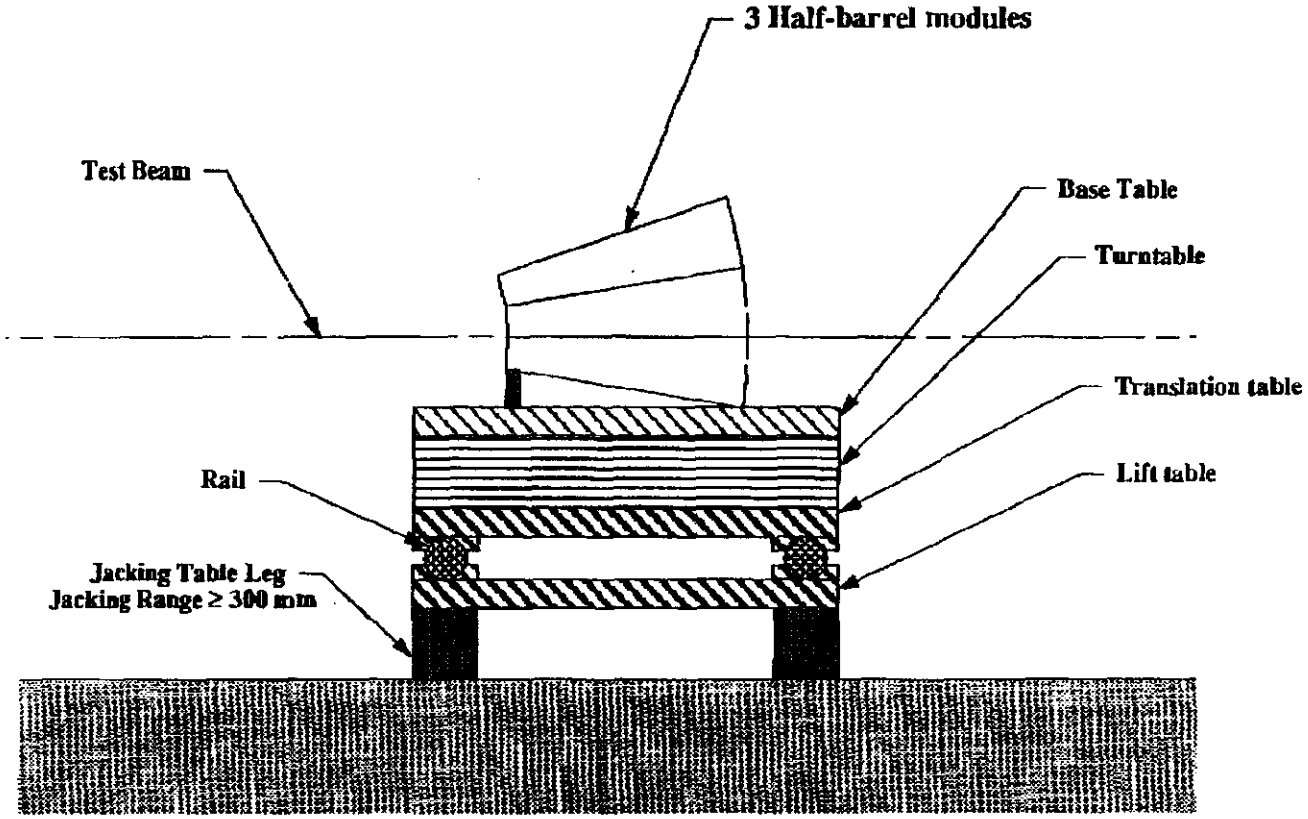

Elevation view

DRAFT

Oak Ridge National Laboratory		
Scintillating HCal Half-Barrel Beam Test Layout with Turntable		
Rev 8	ID:	SCALE 50:1
08/10/92	Drawn: C. Eberle	
P 4 of 4	Approved:	

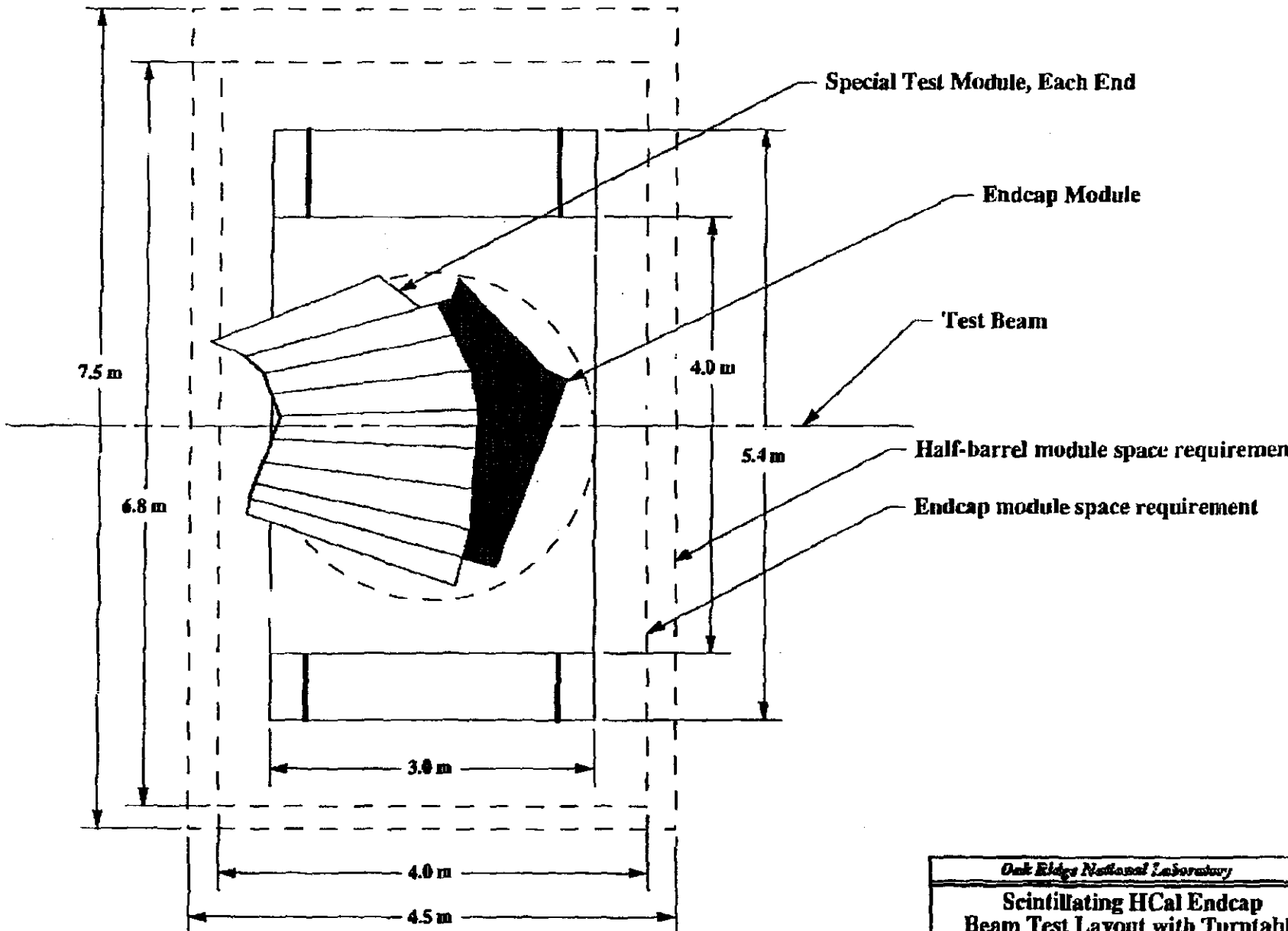

Plan View

DRAFT

Oak Ridge National Laboratory		
Scintillating HCal Endcap Beam Test Layout with Turntable		
Rev 0	ID:	SCALE 50:1
08/10/92	Drawn: C. Eberle	
P 1 of 4	Approved:	

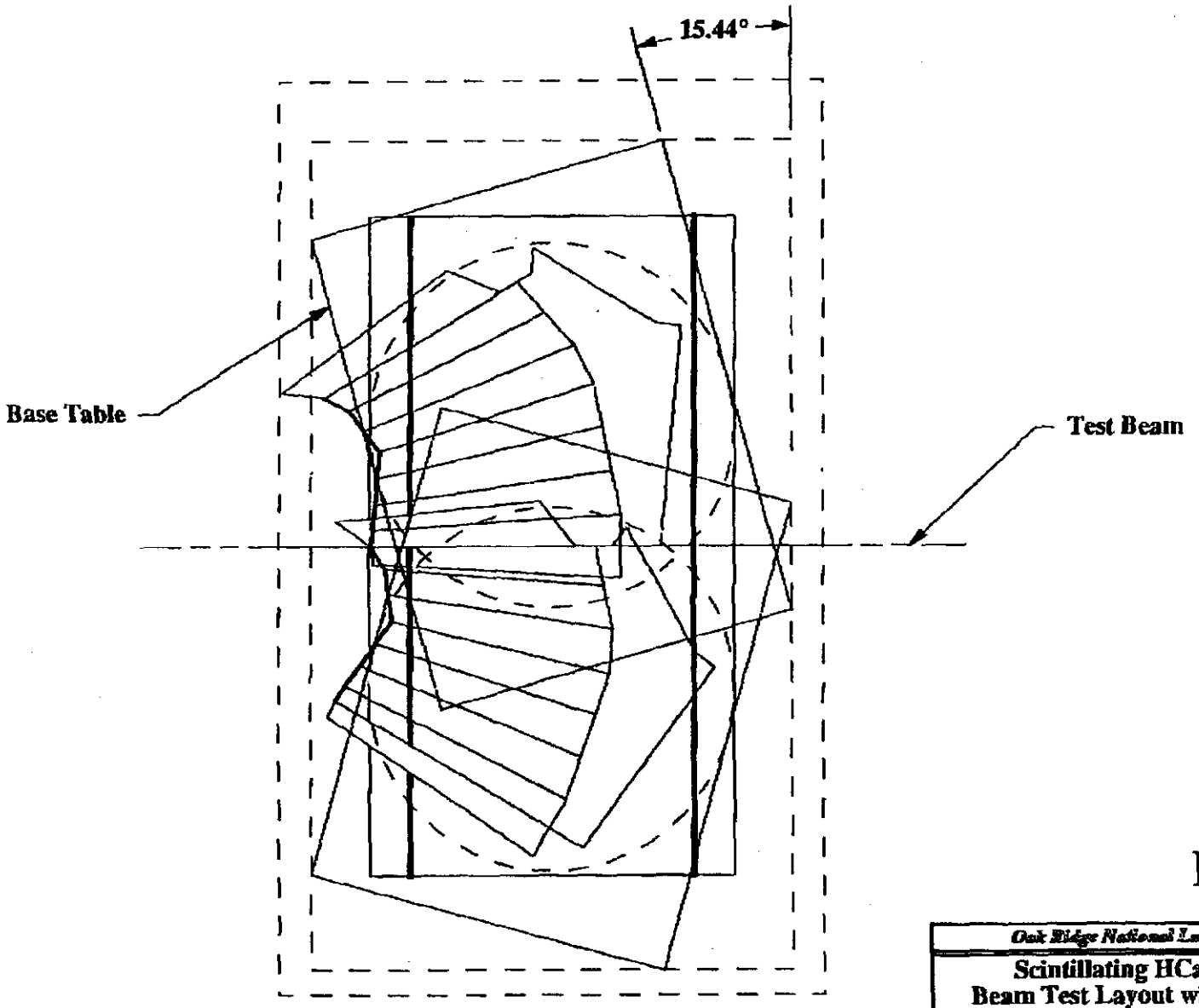

Plan View
Modules in Extreme Positions

DRAFT

Oak Ridge National Laboratory		
Scintillating HCal Endcap Beam Test Layout with Turntable		
Rev 0	ID:	SCALE 50:1
08/10/92	Drawn: C. Eberle	
P 3 of 4	Approved:	

μ detection

Landau's

@ $\theta_2 = 3^\circ$

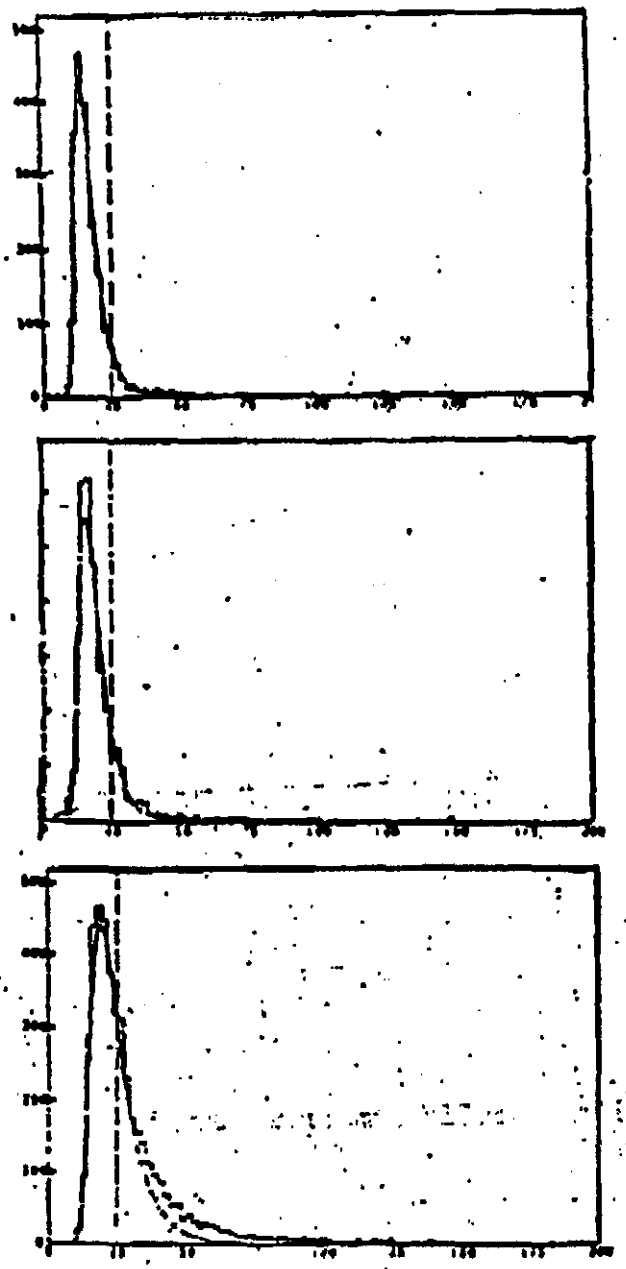

(SPACAL)

EM calorimeter in front to validate test results.

In order to be certain that we have the correct algorithm to add together signals from the Kr EM-calorimeter and the fiber hadron-calorimeter, we must calibrate an equivalent system over an energy range similar to that expected from SSC. Need hadron beams (in increments of 100 GeV) with at least 10^6 particles at different positions. This should take 2 to 4 weeks of dedicated testing.

References

[1] S.R. Hahn, M. Miller, D. Connor, et al. Calibration systems for the cdf central electromagnetic calorimeter. *Nuclear Instruments and Methods*, A267:351–366, 1988.

[2] M. Boettcher, W.D. Brewer, and E. Klein. A simple method for the stabilization of scintillating detectors. *Nuclear Instruments and Methods*, 206:177–181, 1983.

[3] L. Holm, H.W. Fielding, and G.C. Neilson. Gain stabilization of phototubes using a led diode scheme. *Nuclear Instruments and Methods*, A234:571–520, 1985.

[4] Yuichi Kubota and Chris O'Grady. Performance of a light flasher system for a prototype csi calorimeter and teh design for cleo ii. *Nuclear Instruments and Methods*, A279:73–76, 1989.

Introduction

The GEM collaboration at the Superconducting Super Collider Laboratory (SSC lab) requests that a test beam facility be installed at the Fermi National Accelerator Laboratory, for the purpose of performing tests on prototypes of components intended for the GEM detector.

This facility would be used by members of the GEM detector groups during the periods when external beams are available at Fermilab. First use is requested for 1993. Additional running periods are requested on a yearly basis.

At the present time, the GEM collaboration is making decisions on the type of technology to be used for electromagnetic calorimetry. The decision on hadronic calorimetry will be dependent on the outcome of this decision and will follow in due course. In addition, late this year there will be a final decision on the type of technology to be used in the GEM muon system. The tracker technology is well understood already.

The detailed requirements for GEM test beams running will be dependent upon the outcome of these decisions, in particular the calorimetry decisions. Therefore we cannot be completely precise at this writing about our requirements. This proposal sets forth general guidelines to inform Fermilab management of the scope of our needs. A detailed proposal will be prepared later in 1992.

Detectors to be tested

The detectors currently under development and test in the GEM collaboration are calorimeters and tracking devices.

The calorimeters, electromagnetic and hadronic, are based on crystal and organic scintillators (most likely barium fluoride and plastics) and cryogenic liquids (most likely argon and krypton). The technologies chosen for GEM will require the most beam time. A "back-up" set of technologies will also be chosen; these technologies will also require beam time.

The tracking devices, the "central tracker" and the "muon chambers" are wire/gas detectors.

In addition, it is likely that tests will be performed on silicon detectors.

Beams

We currently foresee that the facility would have one beam line, which, as required, would be configured as follows:

Protons	Momentum	800 GeV diffracted protons
	Momentum resolution:	< 1% dp/p
	Spatial resolution:	0.002 m
	Intensity:	10 - 10,000 Hz by 1994 occasional "pinged" beam of 10^7 protons in a 10 msec. "ping"
Pions	Momentum:	2 - 650 GeV
	Momentum resolution:	< 1% dp/p
	Spatial resolution:	0.002 m
	Purity:	e/pi < 10^4 low energy pions may require a secondary target to reduce muon content
	Intensity:	10 - 10,000 Hz
Electrons	Momentum:	2 - 175 GeV
	Momentum resolution	< 0.2% dp/p
	Spatial resolution	0.002 m
	Purity:	pi/e < 10^{-3}
	Intensity:	10 - 1,000 Hz
Muons †	Momentum:	> 50 GeV 5 m steel hadron absorber

† For this beam we request to have available for a few months a momentum tagged high energy (>500 GeV) muon beam crossing an area (approximately 2 m (along the beam) x 2 m (horizontally across the beam) x 1 m (vertically across the beam) with a vertical magnetic field of 0.8 - 1.0 Tesla. The beam intensity should be > 100 Hz. A possible candidate would be the space inside the CCM in the New Muon Laboratory.

Facilities

The part of the beam line to be occupied by the prototypes under test should be approximately:

along the beam line	40 m
across the beam line	> 5 m everywhere > 20 m (see below (*) > 3 m

(*) The cryogenic calorimeter and the Muon Detector require floor space, 10 M to one side of the beam and 5 m to the other side of the beam.

There should be 200 m**2 of assembly area.

Both the beam and assembly areas should be accessible to a 25 ton crane.

There should be available approximately one megawatt of AC power.

There should be floor space for forty relay racks.

There should be office space for a minimum of thirty desks.

There should be climate control to keep the beam line, assembly area, counting rooms and offices between 19 and 25 degrees centigrade. Humidity control should be capable of maintaining 40% R.H. in the experimental area while testing BaF_2 crystals. Alternatively, a humidity controlled enclosure for the crystal stand will be needed.

The facility should be wired for telephone and computing network (ETHERNET) service.

The cryogenic calorimeter test would use a setup similar to that used by the D0 tests in NWA. Should this facility become available, rather than constructing a new one, GEM would request its use.

The crystal/scintillator calorimeter tests could use the transporter built in 1991/2 by Fermilab in support of SSC generic R&D. This facility will be provided by GEM.

Beam Line Support

We request that Fermilab support the beam transport system, the beam line momentum tagging system and the particle identification systems (Cherenkov counters and Transition Radiation Detectors). We foresee that the beam transport system be under the control of the Fermilab Operations Group. We foresee that the beam line instrumentation be operated by the GEM users with assistance from the appropriate Fermilab personnel.

General Support

We request equipment support from the PREP pool at a level comparable to the one given to E-790 (Sciulli) and T-849 (Kobrak). We understand that this implies that PREP equipment would be available as long as the modules are not required by activities related to the normal Fermilab Physics program.

We request, from the Fermilab Computing Division, the support necessary for network access and electronic mail service. Equipment needed for on-line and off-line computing will be provided by GEM. Should, on an occasional basis, our needs for off-line computing exceed our capacity, we request access to the Fermilab Central Computing facilities to allow appropriate turnaround in the analysis of the test beam data. We expect such requests to be small in terms of disk space and compute cycles and to happen infrequently.

Scheduling

We request that beam be scheduled for this test beam facilities as frequently as possible. It is essential that a running period of a few months be available in 1993. The GEM collaboration will have a test beam coordinator on site at Fermilab during the times when the beam line is active. The coordinator will be the contact person for the GEM collaboration in matters concerning the use of the test beam facility. The coordinator will keep the Fermilab Program Planning Office appraised of current activities and of requests for the short and long term future.

Reports on test beam activities and results will be presented on a regular basis.

During the period of planning, construction and commissioning of this test beam facility, the test beam coordinator and other appropriate GEM personnel will be resident at Fermilab to work together with Fermilab people on these activities.

More Detailed Requirements

Detailed requirements for the test beams will be made available after the major GEM subsystems decisions have been made.