GEM TN-92-181

Description of GEM Magnet Conductor Program

P. Marston, J. Minervini, B. Smith, R. Vieira
MIT Plasma Fusion Center

N. Martovetsky, P. Reardon
SSC Laboratory

R. Scanlan
Lawrence Berkeley Laboratory

September 14, 1992

Abstract:

Technical parameters, preliminary specifications and test/inspection requirements are presented for the GEM conductor.

19p.

09/14/92
compiled by
N. Martovetsky
Phone (214) 708 6324

DESCRIPTION OF GEM MAGNET CONDUCTOR PROGRAM

INTRODUCTION

The Superconducting Super Collider Laboratory (SSCL) is a high energy physics research facility being built by Universities Research Association (URA) in Ellis County, Texas, for the Department of Energy (DOE). The Supercollider is designed to produce reactions among the elementary constituents of matter at the highest possible energies. Results will be obtained by observing the head-on collisions of protons which are steered in two counter-rotating beams at nearly the speed of light around a 53 mile collider ring. These collisions will occur at an interaction region (IR) and be observed by complex and specially designed detectors. Data created as a result of reactions from a proton/proton collision are collected by several specifically designed detector systems and recorded for later analysis and study of the fundamental makeup of matter. The Gammas, Electrons and Muons (GEM) Detector at IR-5 is one of two major detectors in underground halls on the east side of the ring planned to be on-line at commencement of SSC operations near the turn of the century.

The requirement for the GEM Detector to be on-line at commencement of SSC operations places the GEM Detector Magnet Subsystem on the critical path of the schedule. Because all of the other detector subsystems reside inside the magnet, it has to be the first item installed upon completion of the underground detector hall in early 1996. This in turn leads to a magnet subcontractor being selected in early 1993 to be able to start magnet coil winding and assembly on-site, when the above ground facilities are available in mid-1994.

The GEM Detector will observe gammas (photons) and electrons with a highly accurate electromagnetic calorimeter. The GEM design for muon measurement relies on tracking in a magnetic field outside of the calorimeter. High precision on the muon momentum is attained by measuring the curvature over a 5 m track length in a magnetic volume. This design philosophy of an electromagnetic calorimeter in the center of a magnetic volume with 5 m minimum track length leads to the need for a very large magnet.

The GEM Detector project was formed in mid-1991 by a collaboration of over 600 scientists and engineers from 85 institutions around the world. The GEM Detector will use a large superconducting solenoid with field shaping iron end poles. Within this concept the magnet will have a field of 0.8 T, an outside diameter of 21.8 m, an inner diameter available for tracking and calorimetry of 18.0 m, an outside end-to-end length of 36.0 m and an inside coil length of 30.8 m. When complete it will be one of the largest magnets in the world. As a result of this physical size, significant amounts of on-site fabrication, sub-assembly and assembly are anticipated.
Two magnet design programs are in progress by SSCL/URA with Lawrence Livermore National Laboratory (LLNL) and Massachusetts Institute of Technology, Plasma Fusion Center (MIT, PFC) these involve the development of the magnet conceptual and initial preliminary designs, the aluminum sheathed superconducting cable-in-conduit conductor, coil segment to coil segment joints, coil winding methods and developmental tooling. These programs were driven by the criticality of schedule and will result in the following status at the time the Magnet contract and the Conductor contract are awarded:

- A preliminary magnet design that will be well developed.
- Some features of the conductor and joint subassemblies for the magnet windings will have been fabricated and technically tested.
- Coil winding concepts will be partially developed and some developmental tooling will be on hand or ordered.

SSCL/URA will procure the entire conductor production run at approximately the same time the subcontract award for the

magnet prime contractor is made. At Present, SSCL/URA plans to provide all of the conductor to the magnet construction subcontractor as Government Furnished Material (GFM). SSCL/URA is also examining options for accomplishment of the procurement effort as part of the magnet subcontract.

One of the most important requirements for the magnet and for the conductor is high reliability, because the entire GEM experiment would be severely jeopardized with significant machine and detector down time and associated costs if the GEM magnet fails. The conductor , including all of its subcomponents, simply cannot fail in service. Quality Assurance and Quality Control, including significant in-process and final inspection and testing must be done to ensure a failure proof system.

Nine principal operations are involved in conductor manufacture and testing:

1) strand manufacture and associated testing
2) cabling and associated testing
3) encapsulation in SS (stainless steel) conduit to form the CIC (cable-in-conduit) with particular attention to the quality and testing of all welding
4) Al sheath manufacture
5) Encapsulation of the CIC in Al sheath
6) Joint manufacture, assembly and test
7) Supplying precise piece length with joints attached
8) Rolling the sheathed conductor with joints attached onto spools appropriate for shipping to SSCL.
9) Conduit and joints should be cold tested at liquid nitrogen temperatures or lower to ensure adequate pressure margin so that all possibilities of leak during all operating modes, including quench, will be eliminated.

ON GOING PROGRAM:

The following technical program will run in parallel with the vendor selection process
Its objectives are:
1) Develop and describe QA procedures which minimize the risk of improper conductor performance at each fabrication step from

strand to cable forming, to conduit encapsulation to sheath application and joints assembly.
2) Establish a cold test procedure for completed conductor and joints.
3) Propose a joint fabrication approach with associated testing.
4) Propose a method for monitoring the length of the conductor assembly (conductor + joints) with tolerances L^{+0}_{-TBD} m.
5) Demonstrate conductor bending and coil forming techniques.
6) Establish at least one method for Al sheath application.

MAJOR REQUIREMENTS FOR THE GEM CONDUCTOR

1	Central field	T	0.8
2	Nominal field in winding	T	1.1
3	Peak field in winding	T	1.6
4	Operating temperature	K	4.5
5	Operating current	kA	52.5
6	Length of the conductor piece	m	1134
7	Number of the conductor pieces		24
8	Maximum hot spot temperature in a quench event	K	100
9	Maximum pressure developed in a quench event	Bar	400
10	Maximum Dump Voltage to ground	V	500
11	Number of charge/discharge cycles		200
12	Charging time	hr	8
13	Maximum number of quenches		100
14	Number of Cycles 293K/4.5K		100

PRELIMINARY SPECIFICATION FOR NbTi SUPERCONDUCTING WIRE

General:

- The specified multifilamentary twisted wire is to be cabled into 450 strand cable about 1134 m long.
- To ensure uniform current distribution strands should be continuous, no cold welds are allowed.
- The GEM conductor is designed to be cryogenically stable, so matrix copper conductivity should be as high as practicable.
- The strand should not be annealed after the final drawing. It will receive annealing after the cabling.

1	Total wire length in all conductor assemblies	km	13041#
2	Total weight of the wire in a magnet	kg	46 250#
3	Wire diameter	mm	$0.73^{+0.0025}_{-0.0025}$
4	Superconductor (NbTi) composition*	wt. % of Ti	50^{+3}_{-3}
5	SC filling factor	%	25^{+1}_{-1}
6	NbTi filament size	microns	< 32
7	Number of filaments		>130
8	Minimum I_c @ 2 Tesla & 4.2 K (at 10^{-5}V/m)*	Amp	400
9	Matrix material - type 101 Copper, oxigen free		
10	Copper resistivity in the wire at 293 K	Ohm x m	$<1.75 \cdot 10^{-6}$
11	RRR in the wire		>150
12	Twist pitch (Right hand)	mm	$10^{+1.5}_{-1.5}$
13	Sharp bend critical radius+	mm	<0.7
14	Wire lengths or integral multiples thereof	m	1400^{10}_{0}
15	Wire insulation	None	

*After the composition is established the tolerances shall be $^{+1}_{-1}$ %.

Quality of the strand:

- Wire condition: clean, degreased, oil free. No kinks, nicks, scrapes and general surface defects. No NbTi filaments shall be visible.
- The vendors measurement sensitivity for the wire diameter should be sufficient to detect local variation along any 50 mm section of strand, i.e. to detect stretching or neck-down.

Tests/inspection:

- Ic/Tc measurements,

- RRR measurements
- Filling factor (Copper- non copper ratio)
- Length
- Sharp bends
- Twist pitch
- Diameter

Shipping reel size - TBD (to be determined)

#Reference numbers
*Measurements of the critical current are required at 0.5 T and 5T for reference for two samples from the start and end of each spool supplied. Critical current criterion - 0.1 μV/cm.
+Without breaking filaments (detected visually after acid etching away the copper substrate) and significantly degrading current carrying capacity.

PRELIMINARY SPECIFICATIONS FOR THE SUPERCONDUCTING CABLE

General:

- 4 stage right hand twisted
- 450 strands without welds
- final cable wrapped with 304 SS tape
- 11mm x 0.5mm, 50% covering
- Total length=24 x 1150m piece length = 27.6 km (Ref.)
- Cable weight/piece - 1890 kg (Ref.)
- Cabling should not degrade superconducting properties of the strands (jc/Tc)
- Cable should be annealed after the last stage to restore high RRR of the copper in the strands

Stage	Element	Strands	Twist pitch	Diameter
1	Triplet	3	25±3	1.46
2	(5x3)	15	64±7	3.6±TBD
3	(5x5x3)	45	175±18	8.05±TBD
4	(6x5x5x3)	450	320±32	19.7±TBD

Quality:

- uniform deformation of triplet and subcables at each step
- no formation of sharp edges on the strands
- minimal abrasion
- no strand breakage
- no cross-overs or loops
- tight contact of the SS tape
- degreased, clean surface of the strands

Tests/inspection:

- twist pitch
- pre-tension
- deformation of strands
- strand breakage
- dimensions
- length
- critical current degradation

PRELIMINARY SPECIFICATIONS FOR THE CABLE IN CONDUIT

General:

- The dimensions for the specified conduit are given for the configuration with the superconducting cable inside after the final reduction.
- The conduit should be vacuum tight in all operation conditions, including cooling down, warming up and quench
- On line flaw control is required
- Material for the conduit- 304 STAINLESS STEEL

1	Inner diameter	mm	20±TBD
2	Outer diameter	mm	25±TBD
3	Length	m	1134
4	Total weight for 24 assemblies	kg	42 400*
5	Weight per piece length	kg	1770*
6	Strand area	mm^2	188.3±TBD
7	Cabling factor strand area#	mm^2	197.8±TBD
8	Helium area	mm^2	116.4±TBD
9	Void Fraction	%	37±TBD
10	Hydraulic diameter	mm	0.54±TBD

*Reference numbers
#Area normal to strand cross section with the cabling factor of 1.05

Quality:

- Smooth internal surface of the conduit with no necks, no short wave flaws. No defects on the outer surface. Leak tight up to 100 Bar at 293 K and up to 400 Bar at 80 K.

Tests/inspection:

- welding quality
- cross sectional dimensions
- length
- high pressure / leak test
- hydraulic resistance

ALUMINUM SHEATH

General:

- Transversal electrical contact to the conduit is not specified (should be good at the ends), but complete electrical continuity of the sheath is required
- Mechanical contact to the conduit should be as tight as possible

1	Material	1100 Al	
2	Min. RRR in final state		17
3	Width of the assembled sheath	mm	45.1±TBD
4	Height of the assembled sheath	mm	68.5±TBD
5	Weight of the unit length	kg	7920
6	Total weight of 24 unit lengths	kg	190000

Quality:

- Smooth and clean surface
- Intimate contact to the conduit
- No short wave variations of the cross sectional dimensions
- Continuity

Test/inspection:

- Dimensions
- Cleanliness
- Sheath butt welds quality (if applicable)
- Longitudinal welds quality (if applicable)
- Check for flaws

JOINTS

General:

- Joints shall have built in forced flow cooling path (secondary loop) for heat removal which is separated from the conduit
Joint should be assembled and cold tested in the factory for leak tightness with a leak rate less than TBD
- Joint design and length of the joint should accommodate tolerances of the conductor length and uncertainties arising during winding process (TBD, expected to be in the range of 30 - 50 cm)

1	Electrical resistance♦	nOhm	0.3
2	Operation pressure	Bar	3.5-10
3	Maximum pressure#	Bar	20
4	Maximum test pressure*	Bar	400
5	Hydraulic resistance of the secondary loop+	Bar	<0.05

♦ at 52.5 kA @ 2 T and 4.5 K
At the quench both inside the conduit in the joint and inside the secondary loop
* In the conduit at the cold leak test, joints will be mechanically clamped to eliminate excessive stresses
+ At operation conditions and mass flow of 1 g/s

Quality:
- Appearance
- Smooth surfaces
- Small hydraulic resistance of secondary loop

Test/inspection:
- Flatness of matching surfaces
- Leak tests, including cold leak test
- Hydraulic resistance
- Dimensions
- Quality of welding/brazing/soldering

FINAL CONDUCTOR ASSEMBLY

General:

- The final conductor assembly shall be delivered to the SSCL, Waxahachie, for winding the coil segments on site.
- Conductor assembly should not be damaged during transportation. Joints and conductor should be protected.
-Shipping reel is presumably to be the pay off bobbin for the winding procedure.
- Dimensions of the shipping reel are TBD

Quality:

- Should meet completely to specification and pass all QA tests.

Tests/Inspection:

- Cleanliness
- Leak tightness of the conduit and joints
- Visual inspection
- Completeness of the QA documentation

GENERAL DISCUSSION

Fig. 1 shows conceptual baseline configuration of the GEM magnet conductor along with other options for manufacture and attaching the aluminum sheath.
Fig. 2. shows some approaches for application of the aluminum sheath.
Fig. 3. and 4 show assumed cabling process.
Fig. 5. show tube mill and TIG welding of the conduit approach for producing the CIC. Other approaches to produce the CIC can also be proposed.
Fig. 6. and 7 show joint subassembly and joint half.

As the conductor is designed to operate in low magnetic fields, the filament size in strands should be as small as practical to eliminate probability of damage during cabling with no substantial penalty in cost.
Conduit manufacturing technology is optional. It may be made by either continuous tube milling and seam TIG welding with the cable

inside or by butt-welding of seamless tube lengths following by pulling the cable through the seamless conduit. Both versions require compacting of the conduit down to the specified void fraction value of 37 %. Other approaches could also be used.

Configuration of the cable is also optional. Fully transposed cable is required but configuration of the subcables may change slightly if there are any reasons from manufacturing or cost effectiveness considerations.

Cold leak tests and QA and QC plans are very important components of the conductor procurement to meet the requirement for the extremely high reliability of the conductor.

Prospective vendors will be required to provide with their proposals both a Manufacturing Plan and a Quality Assurance Plan in accordance with Outlines to be specified by the SSCL.

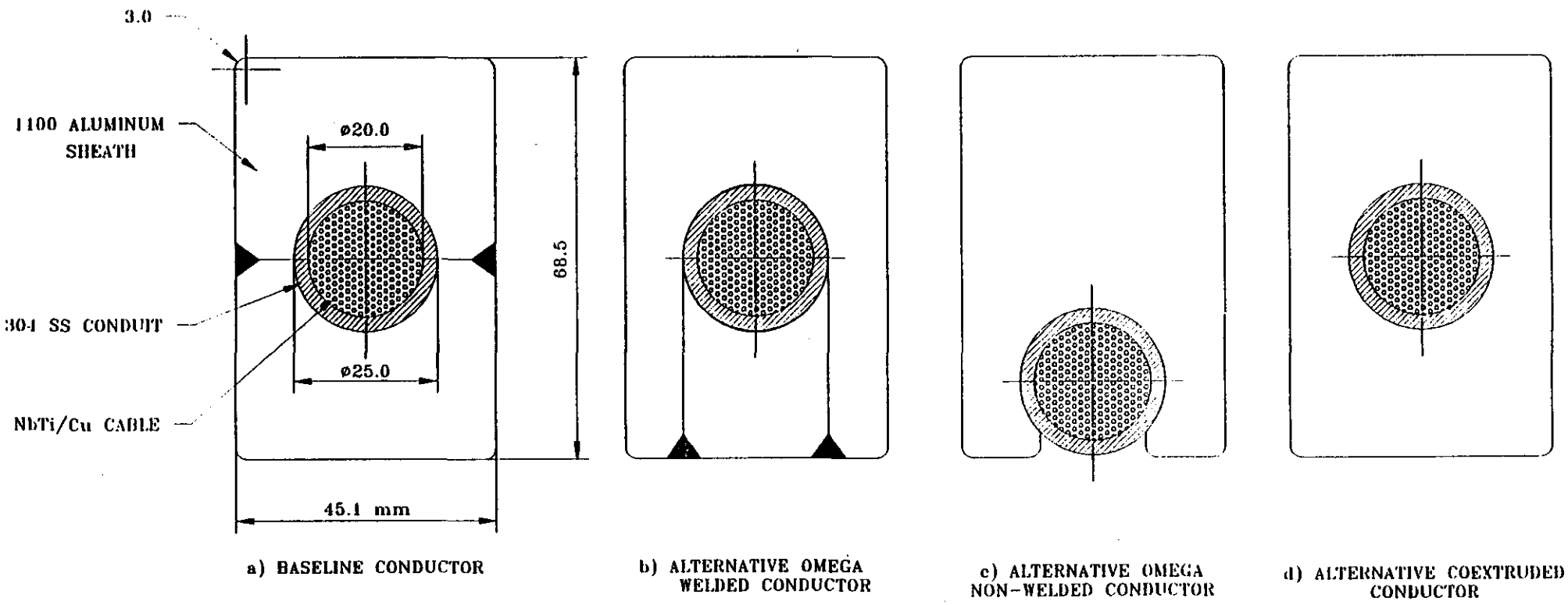

Fig.1. GEM conductor cross section dimensions and possible methods for aluminum sheath attachment

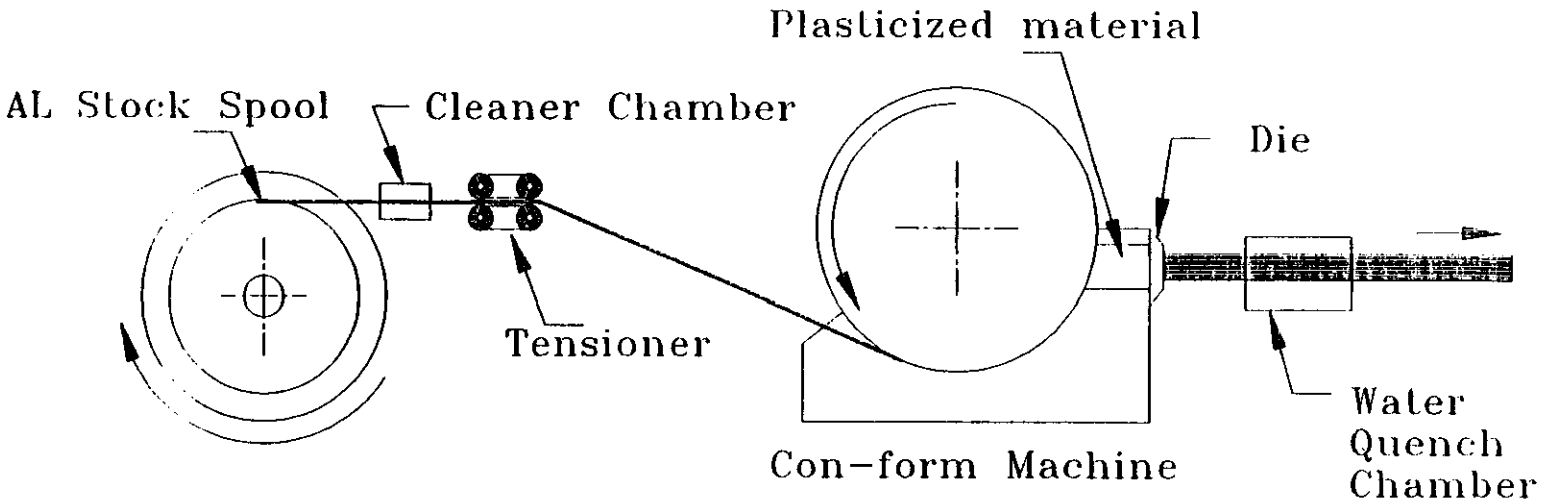

a) Con-Form Extrusion Method
(For Sheath only)

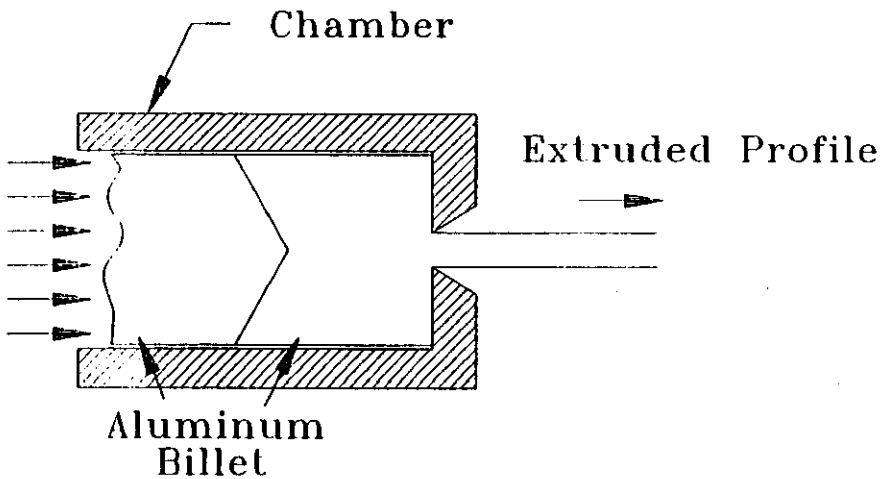

b) Tandem Extrusion (die stop)
(For Sheath only)

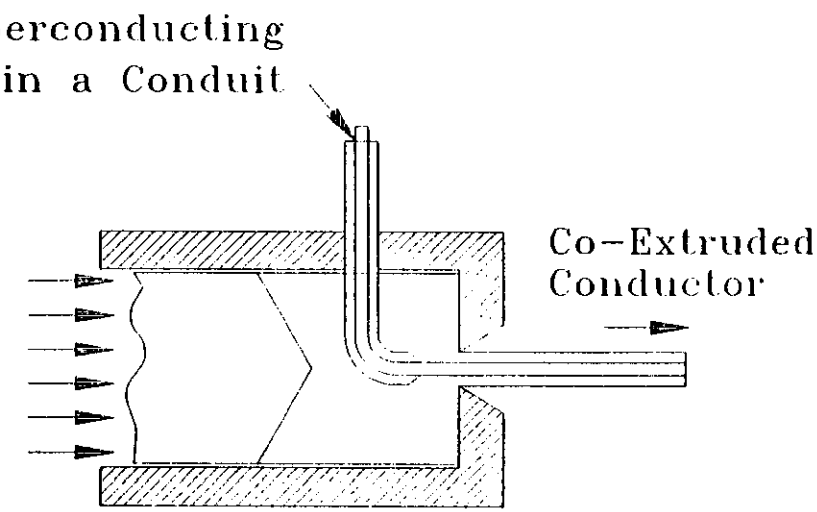

c) Tandem Co-Extrusion
(For Sheathed Conductor)

Fig.2. Some sheath fabrication options

GEM CABLING PROCESS

WIRE TWISTING

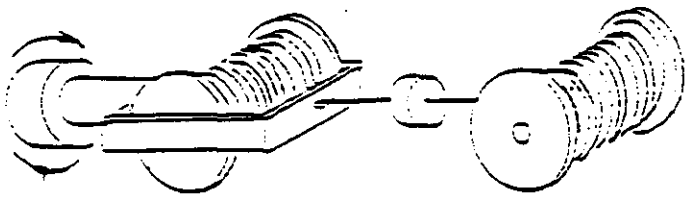

1ST STAGE - TRIPLET

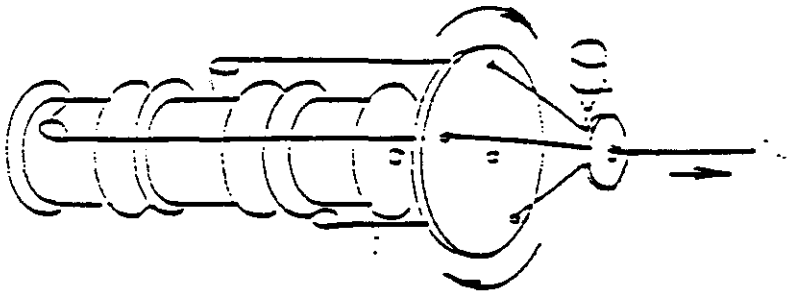

2ND STAGE - 5x3

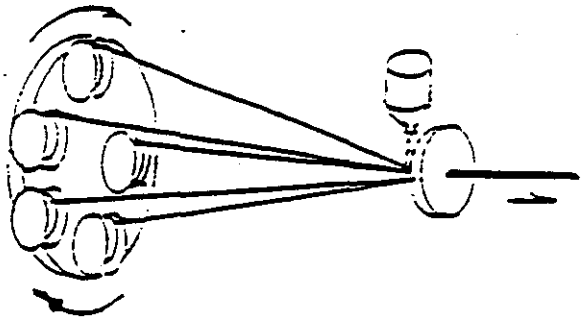

3RD STAGE - 5x5x3

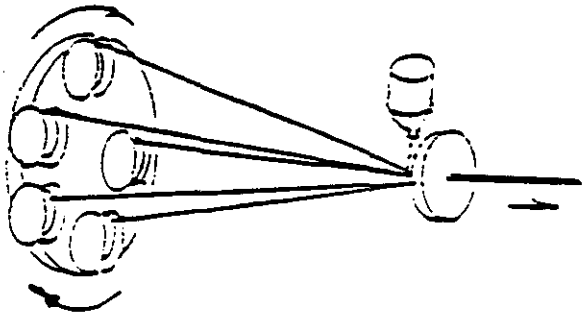

FIG 3

FINAL STAGE CABLING PROCESS FOR GEM CABLE

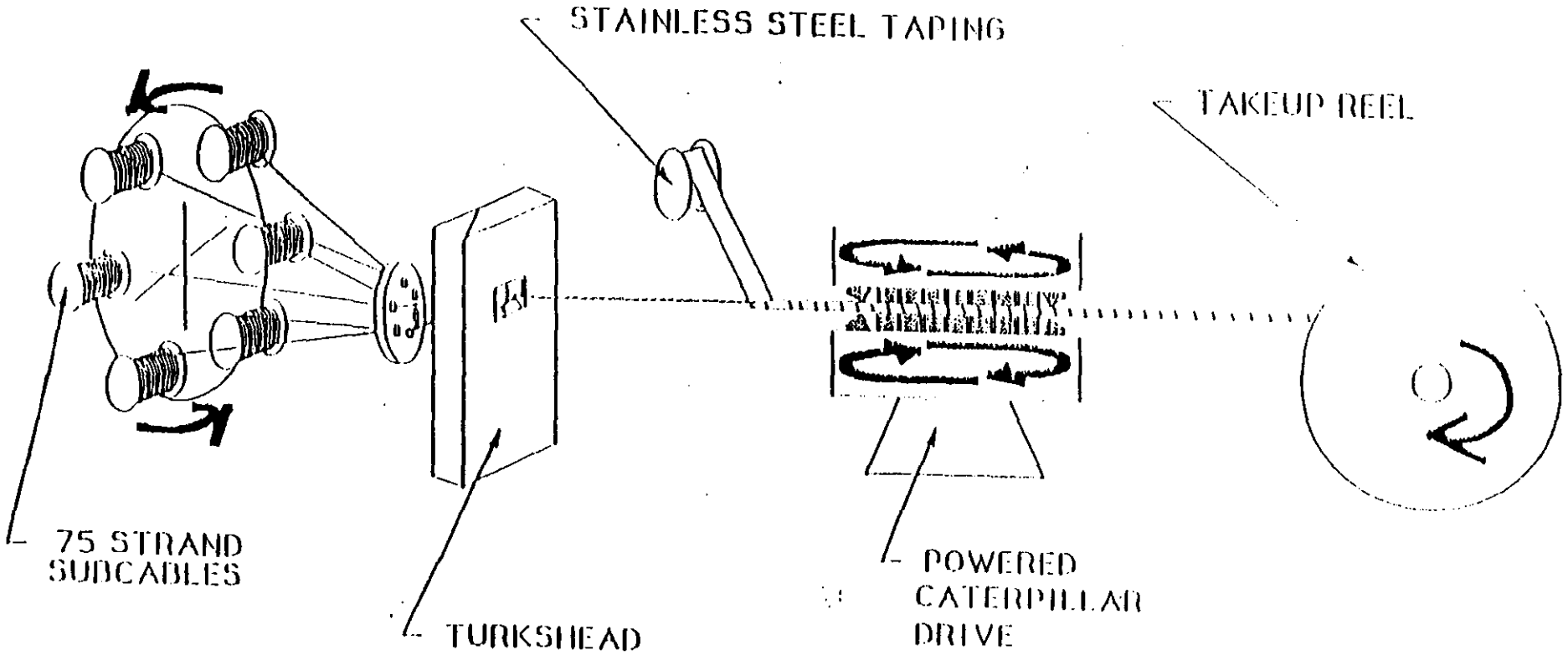

FIG 4

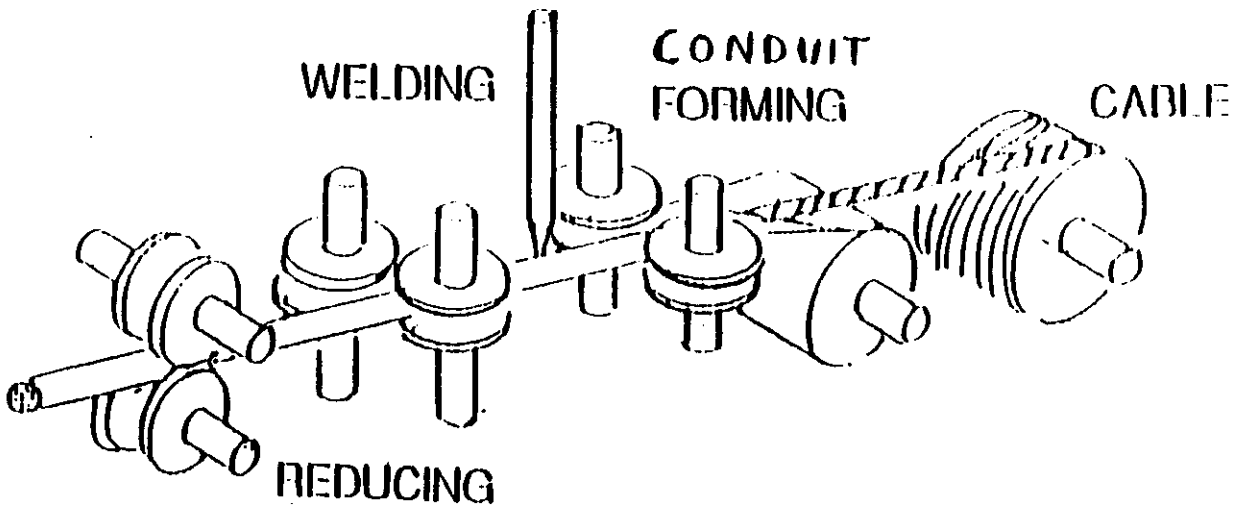

FIG 5

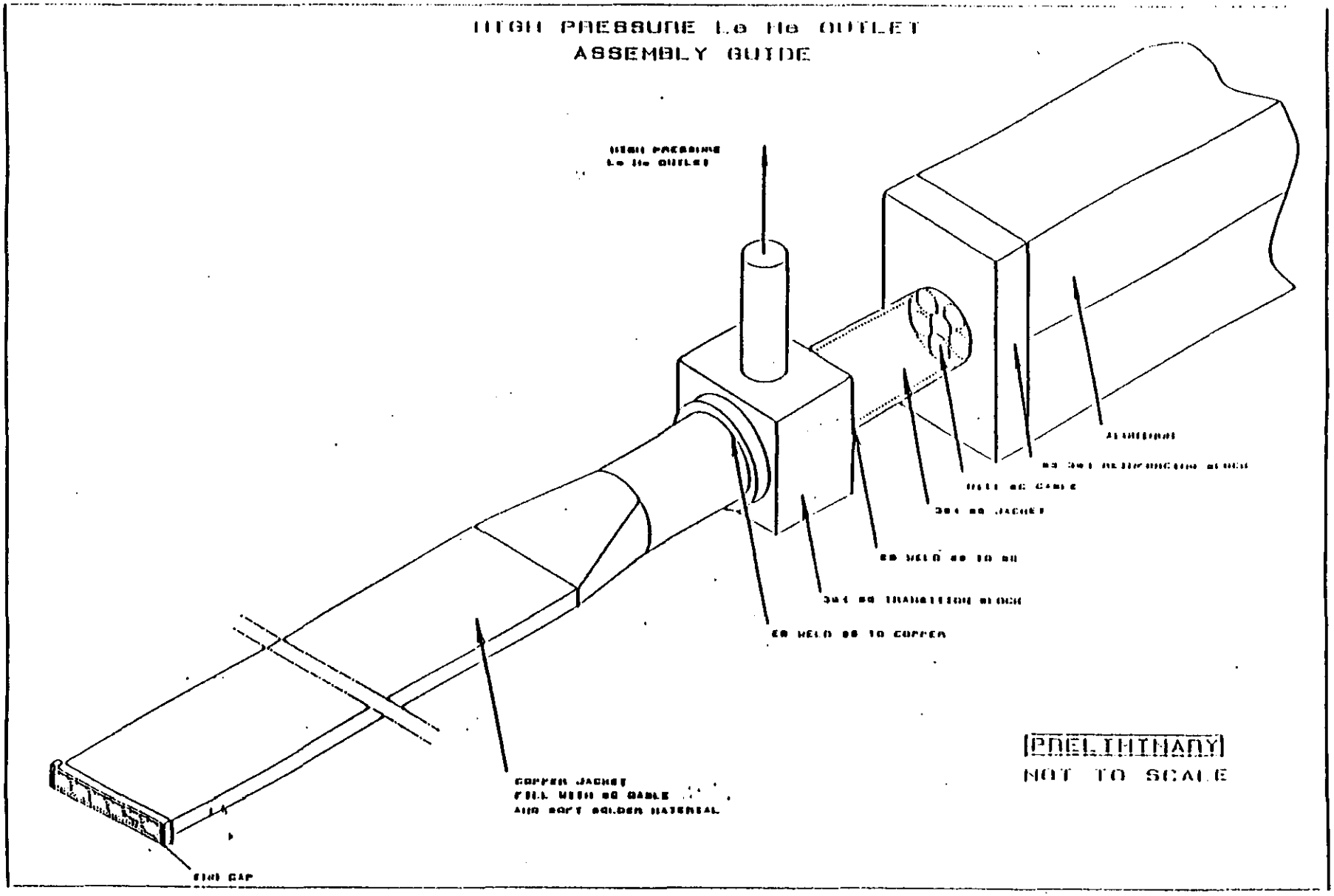

Figure 6 : Joint Subassembly

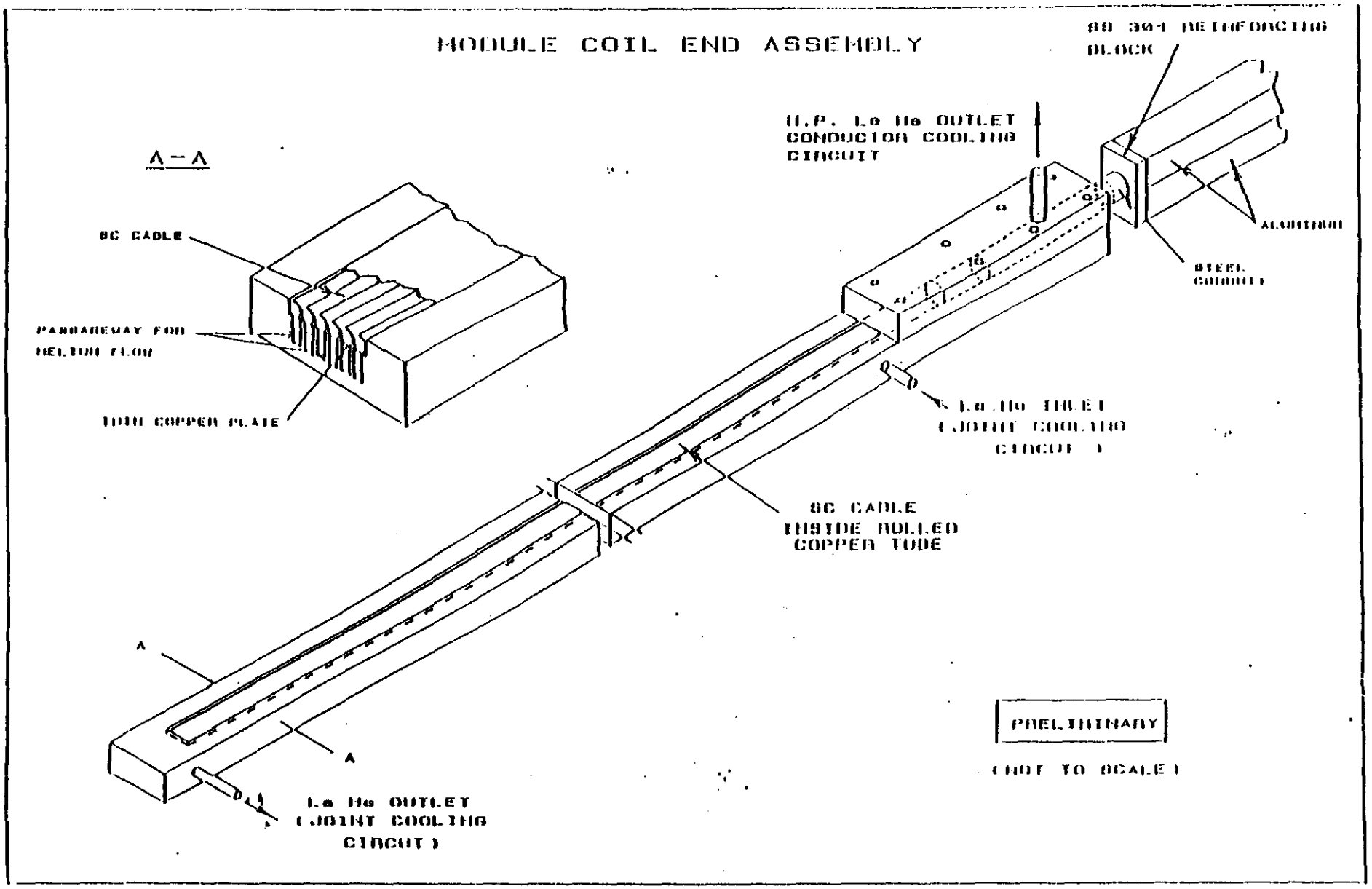

Figure 7. Joint Half