GEM TN-92-178

Experience Background on Muon Detectors and Gas Chambers in IHEP of Beijing

Yi-gang Xie, Yuan-bo Chen, and Ya-nan Guo
Institute of High Energy Physics, IHEP - Beijing

September 17, 1992

Abstract:

The experiences of IHEP - Beijing about mass production of muon detectors for domestic experiments and international collaborations, as well as, some research on gas chambers are presented. In addition, preliminary investigation into some gas detector characteristics relating to GEM muon sub-detector candidates are discussed.

Experience Background on Muon Detectors and Gas Chambers in IHEP of Beijing

Yigang Xie . Yuanbo Chen. Yanan Guo
(Institue of High Energy Physics . Beijing. China)

For last 15 years in IHEP of Beijing, a numbero of muon detectors and gas chambers have been built, aimed to domestic experiments and international collaborations.

(More than 20 experienced physicists and engineers with more than 10 year experiences)

I. Muon Detetors

1. BES (Beijing e^+e^- colliders spectrometer)
2. ALEPH at LEP
3. E636/E745. E782 at FNAL

II. Other gas chambers

1. 90 cm streamer chamber.
2. JET chamber (image drift chamber) 1m x 0.2m x 0.2m
3. TEC module (time expansion chamber)
4. BES drift chamber (ϕ2.5m x 3m).
5. BES shower counters with streamer mode for EM Calorimeter.
6. MWPC for positron camera.
7. narrow gap MWPC mass production for L3 hadron Calorimeter.

III preliminary Investigation into some Gas Detectors relating to GEM muon Detectors

1. RPC prototype
2. Spatial resolution improvements with
   - drift characteristics ——— similar to LSDT
   - Centroid on cathode strips — CSC using Iarocci tubes.

1 Muon Detector from IHEP (Beijing)

1. BES

BES (Beijing Spectrometer)

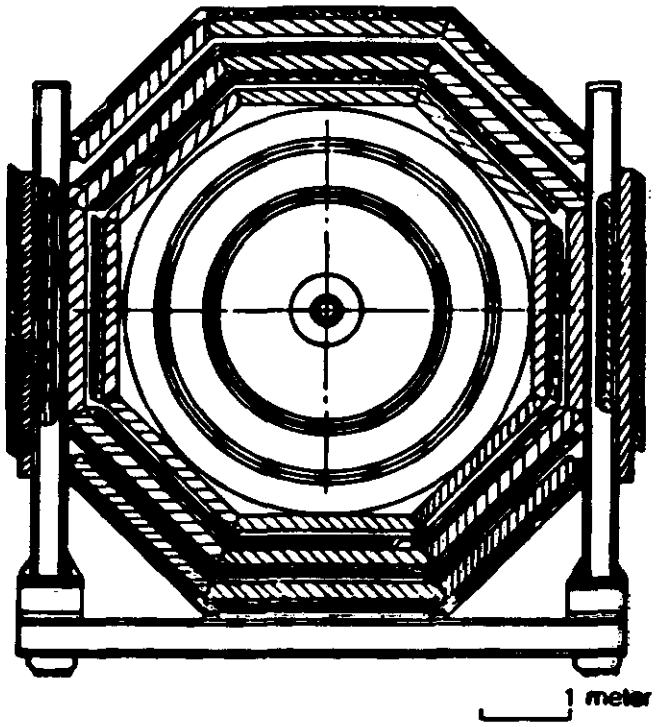

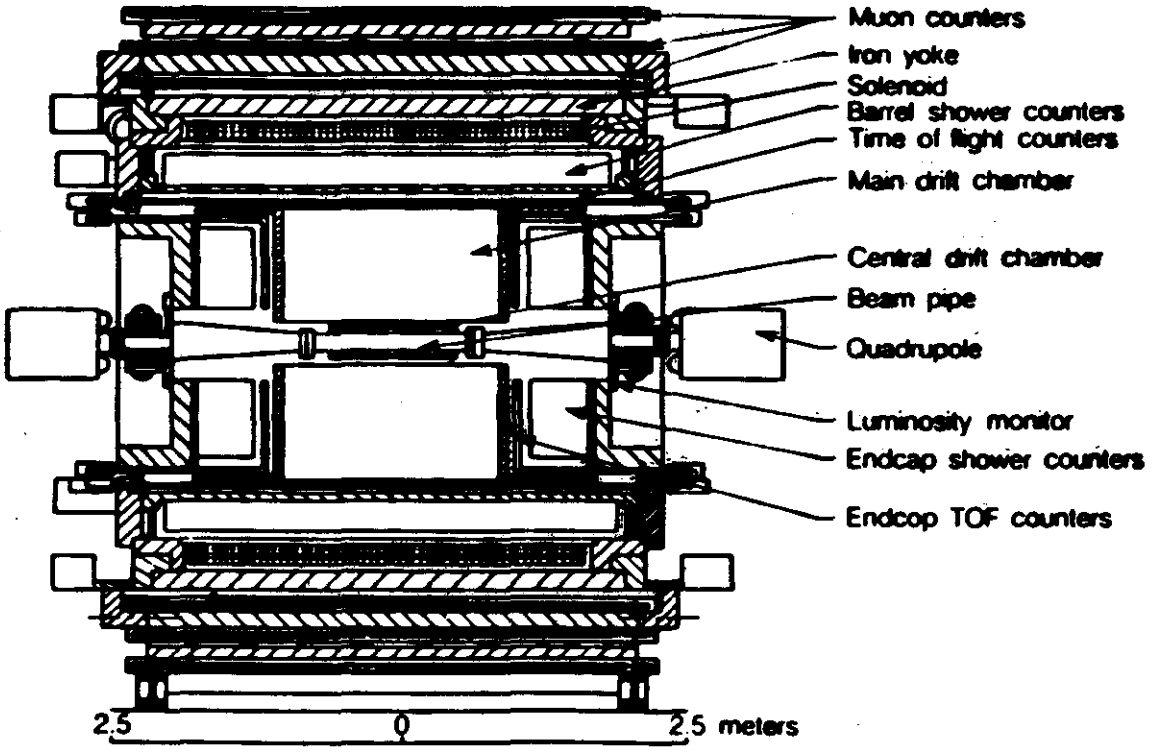

XBL 852-10254

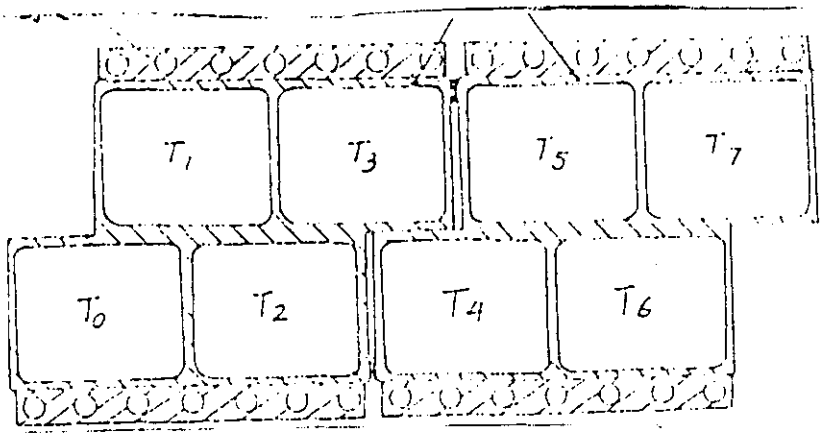

structure of muon counter profile of BES

• tube amount	1512 (189X8)
mode	proportional mode
gas	Ar/CH_4: 90/10 nice gas tight
dimension	6X5 cm2 rectangular (end plug
• length	4.21/4.64 m
acceptance	67% /4π
efficiency	>98% (Single tube)
σ_z	5cm (charge division) 0.5%
σ_{xy}	3cm (total length 2×4 m
minimum energy	0.5GeV
built	1982-1988.Oct
status	smooth physics run
	1989-

recent: Important role in τ mass measurment

2. ALEPH (1983 —)

→ x8 ~ 36,000 channels

Beijing group is responsible for:
1. building 4500 (2-7 meter long) plastic streamer tubes at Beijing. (including 7 machines and 3 test facilities for mass production).
2. assembling and testing 63 muon chambers (2x4-5x7 M2) using these 4500 tubes at CERN.

chambers	barrel 桶部	middle angle 中间角	end-cap 端盖
inner layer 内层		18	
outer layer 外层	17	20	8
total 共计	63 chambers (cover 1800 square meter 27km tube length) ≈ LEP circle		

15 ton plastic tube
comb profile
made in China

Middle Angle \ inner Barrel (outer)

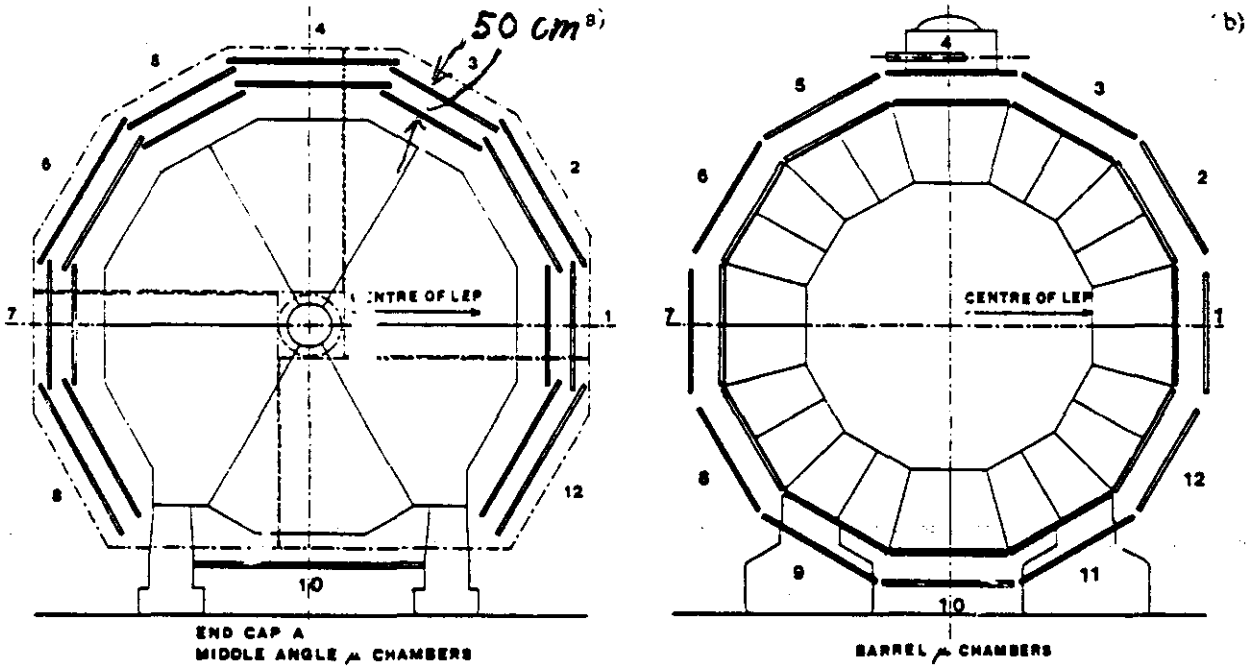

38
1.7x3 m²

34
25x7 m²

End Cap
(outer)

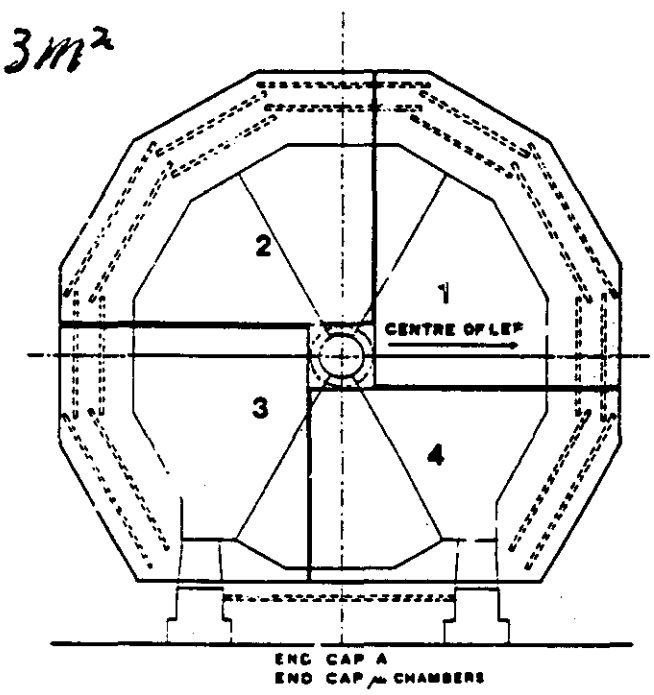

16
4x6 m²

Fig. 6 Cross-section view of the muon shambers and their (hardware) identification number: a) barrel, b) middle, c) end-cap.

63 (Beijing) out of 88 (total)

Structure of PST (Plastic Streamer Tube)

in China • good extrusion tolerance of plastic < Box / comb profile

inner Cell Wall
9±0.2 , 1±0.1

8 m length : Straight

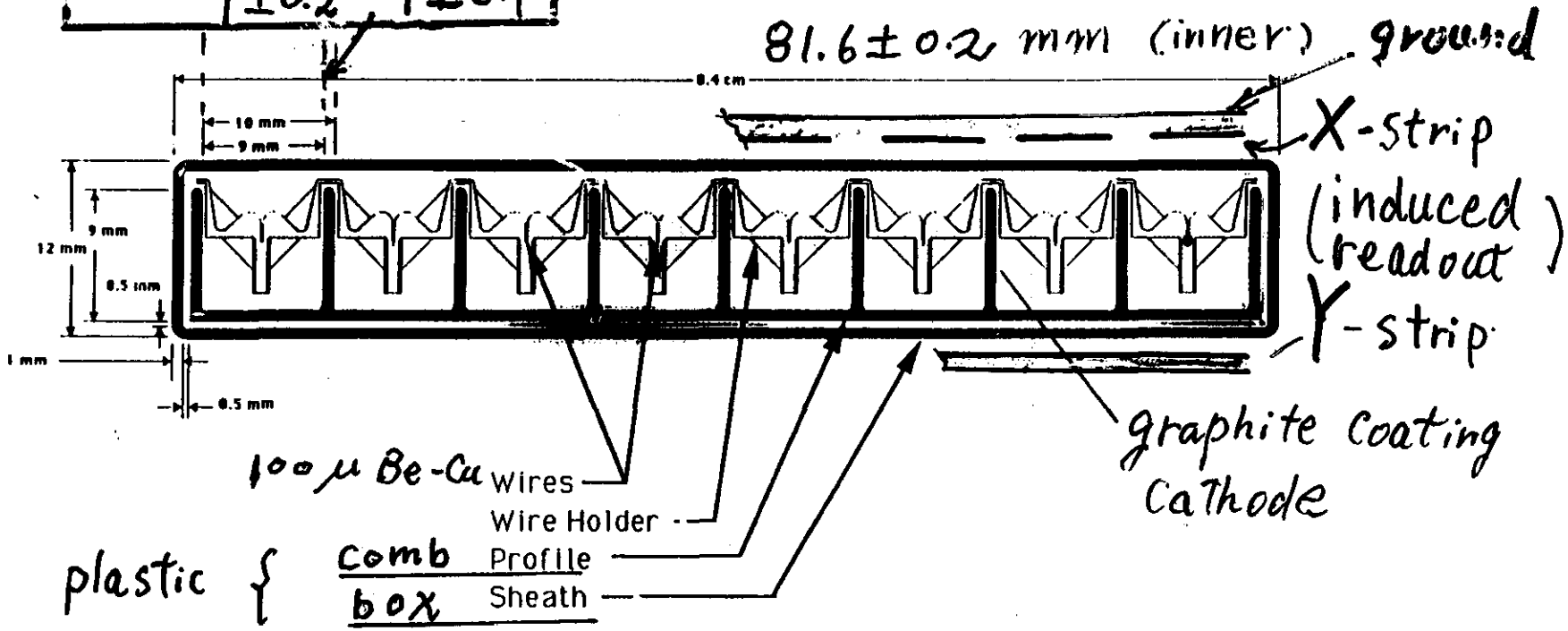

• Satisfied requirement : good as Italians.

High production rates : >93 %

Low dark current : < 0.2 μA

Long plateau : >600 V

large, fast > signal 70mV 5ns

Production procedure of PST

1984 – 1988

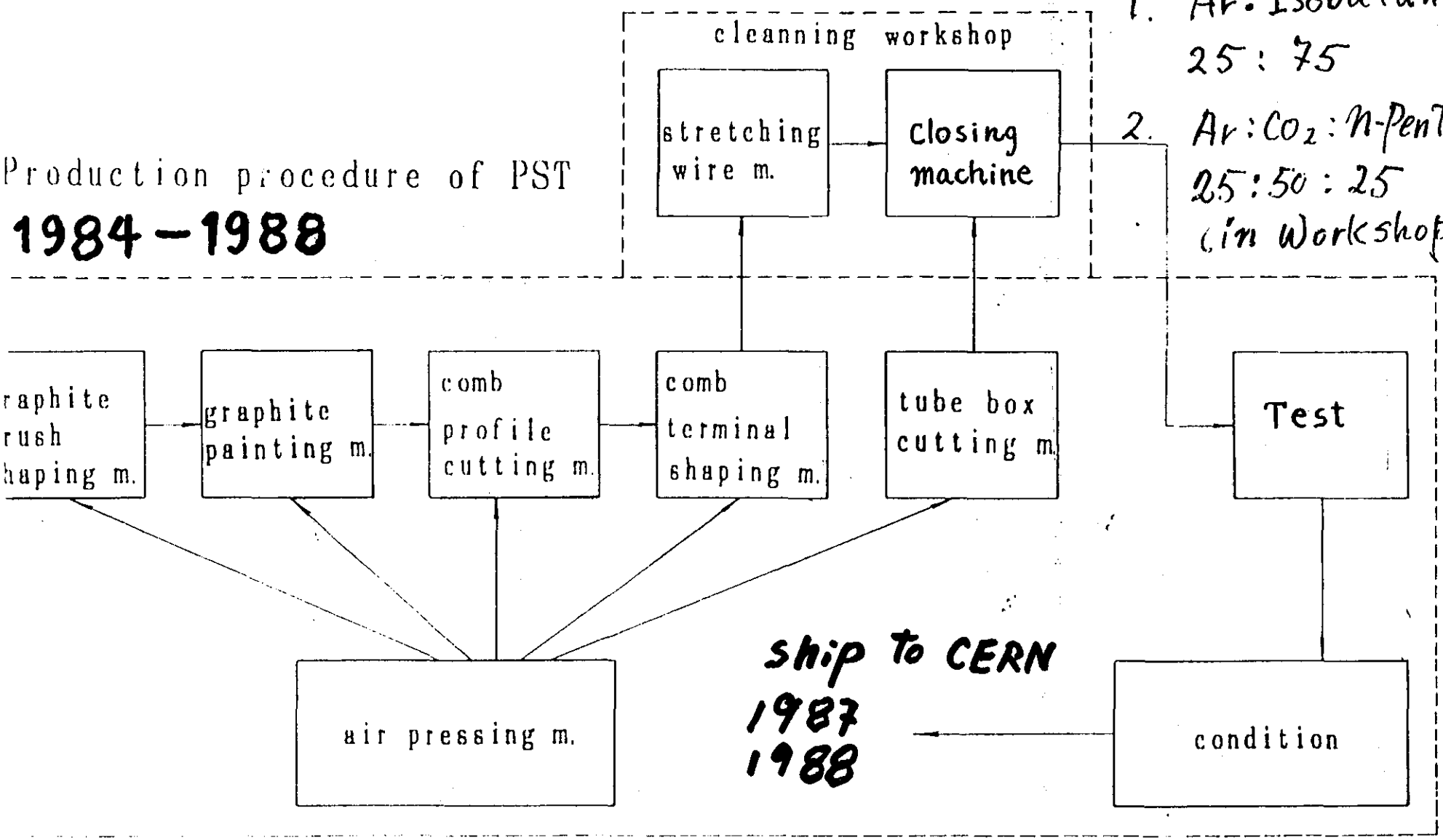

ship to CERN
1987
1988

gas:
1. Ar : Isobutane
25 : 75
2. Ar : CO_2 : n-Pentane
25 : 50 : 25
(in Workshop)

7 machines +3 Test systems

3. unflammable gas
Ar : CO_2 : Isobutane
Safty → 24 70 6 → in Pit

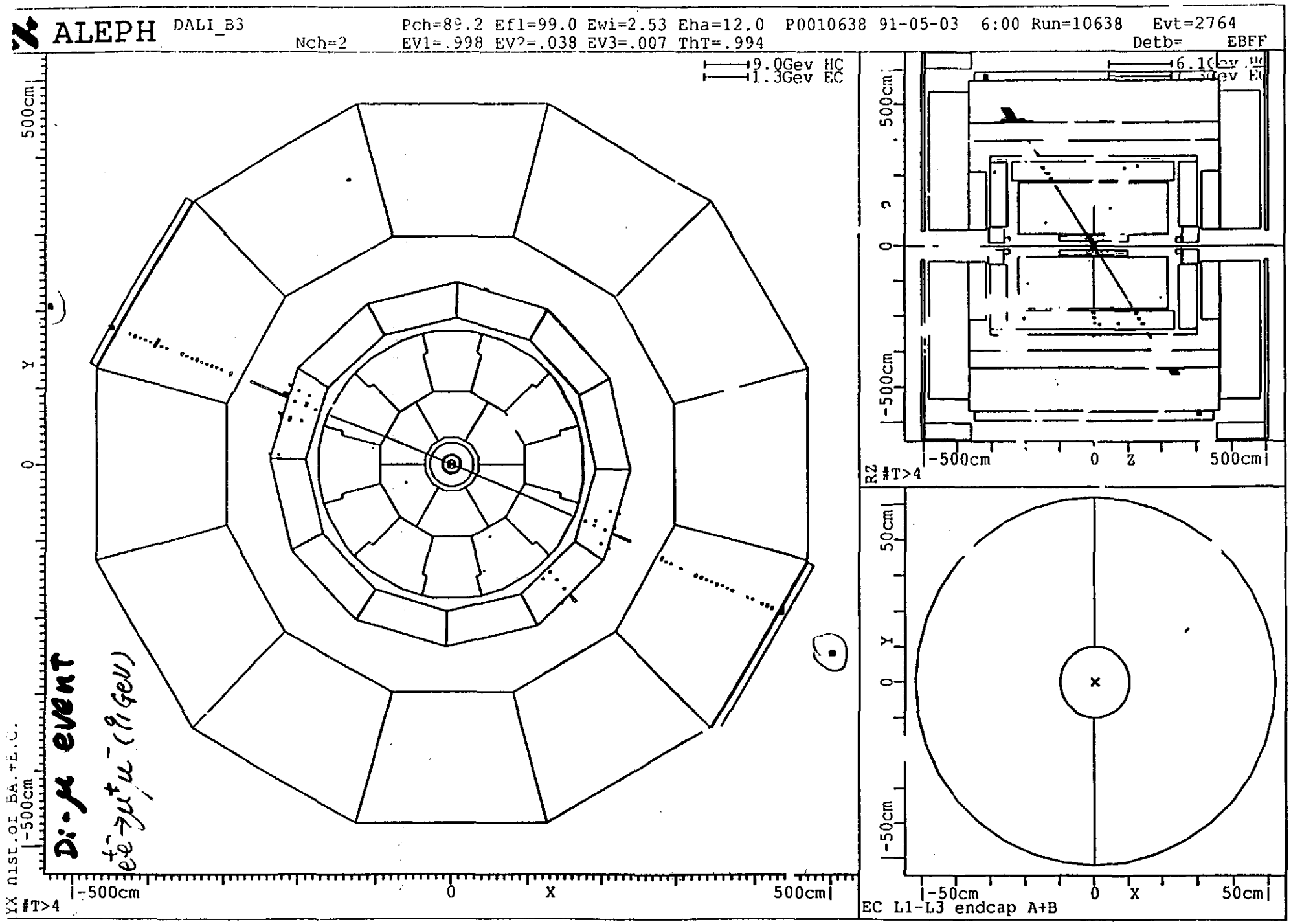

1992.5 IED mm Colliding mode typical plots

3. E636/E745, E782, Beijing group Participated in from 1983 – 1990

built all PTC (Drift tubes) 210 modul

210×15 ~ 3150 channe

1984 transported to FNAL

collaborated with I. Pless of MIT

	CRISIS	Particle Identifier
	DC	Drift Chamber
*	PTC	Proportional Tube Counter
	PWC	Proportional Wire Chamber

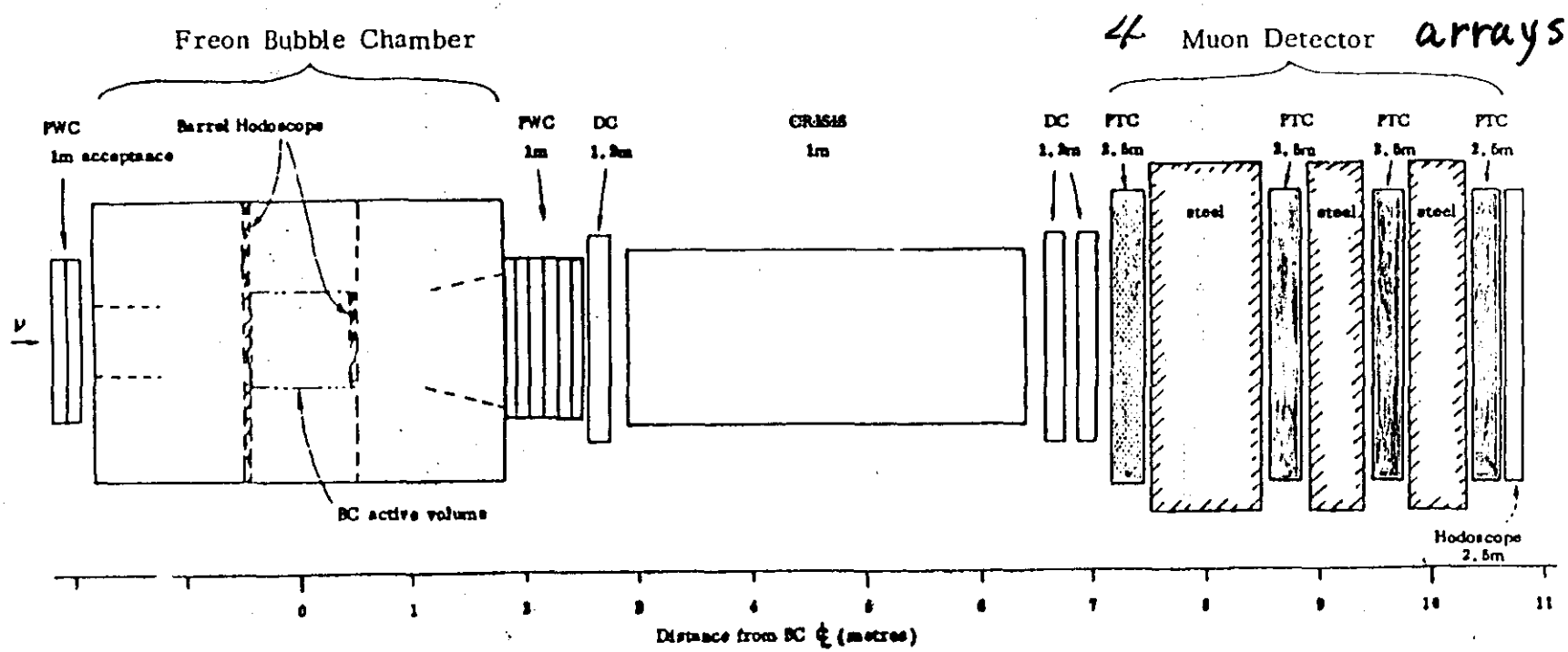

FIG. 1 PLAN VIEW OF BEAM-LINE COMPONENTS FOR E636/E745

Tube structure and characteristics

dimension : 2.54X2.54X 1.5 m (or 2.5 m)
gas : Ar : CH_4 = 90% : 10%
mode : proportional
σ : 1 mm

1 Module ~ 15 channels

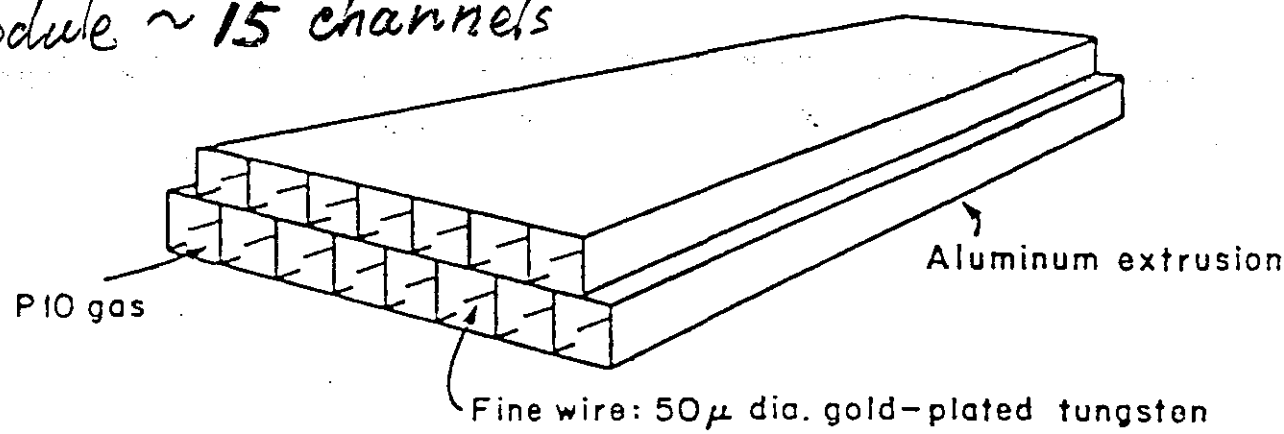

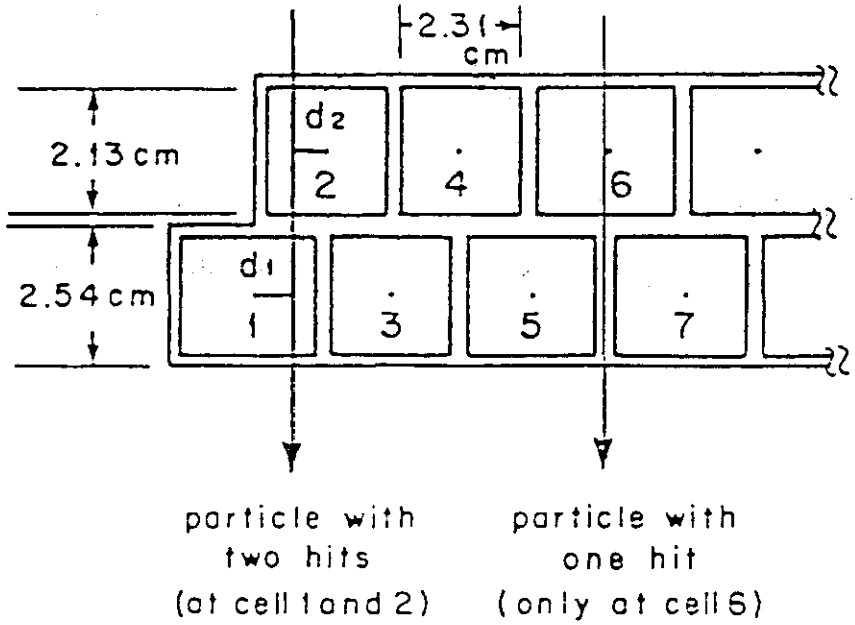

Work well to the end (1990)
low noise (assembling clean)

II Other gas chambers (omitted)

III Preliminary Investigation into some GEM μ subdector.

1) RPC (Resistive Plate Chamber)
   sketch view of the prototype
   24x24 cm2

   large dimension in preparation
   (100x 60 cm²)

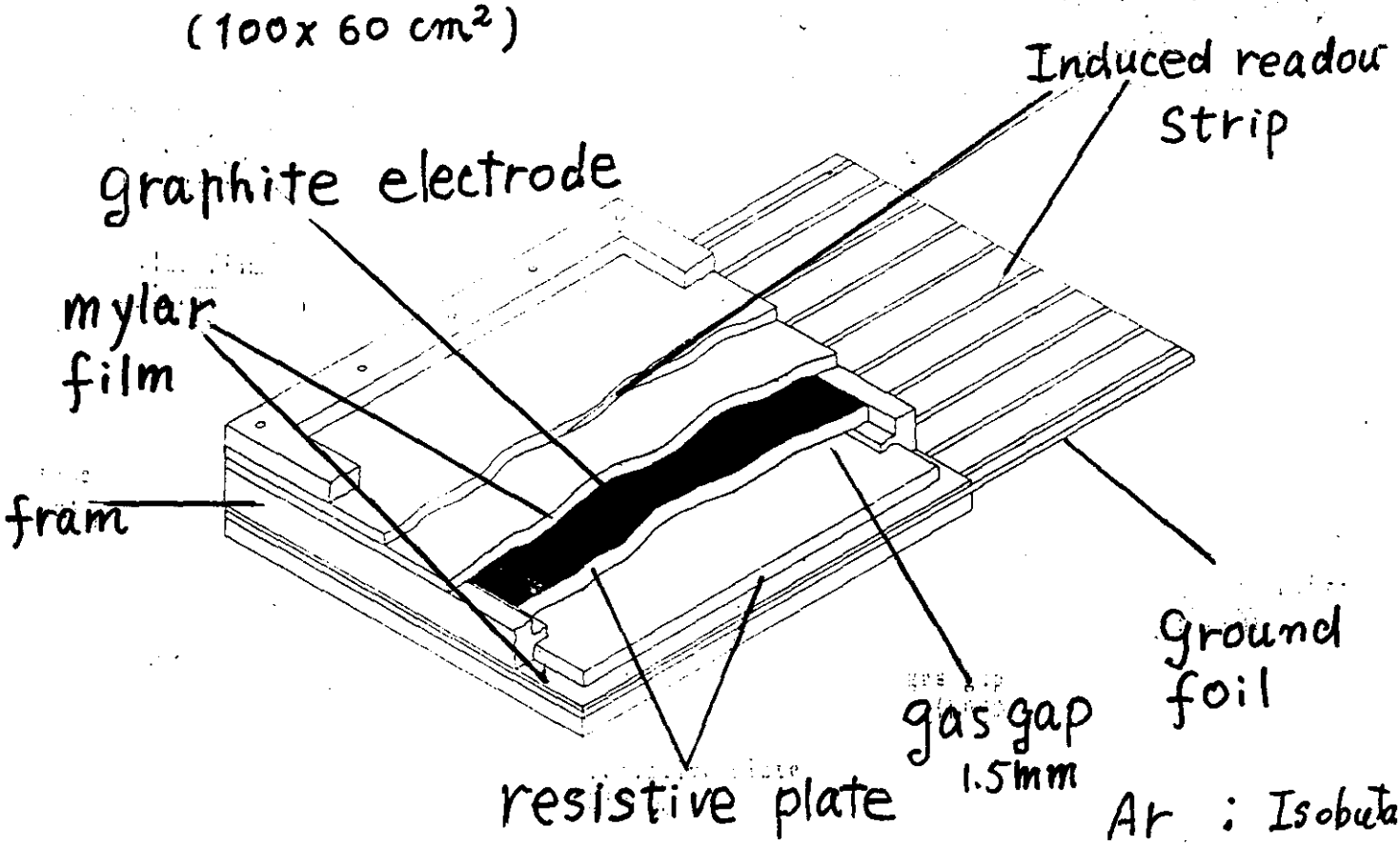

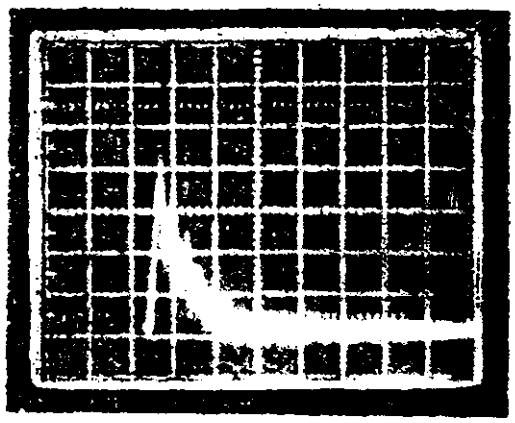

signal from induced strips
400 mV, rise time 3ns.

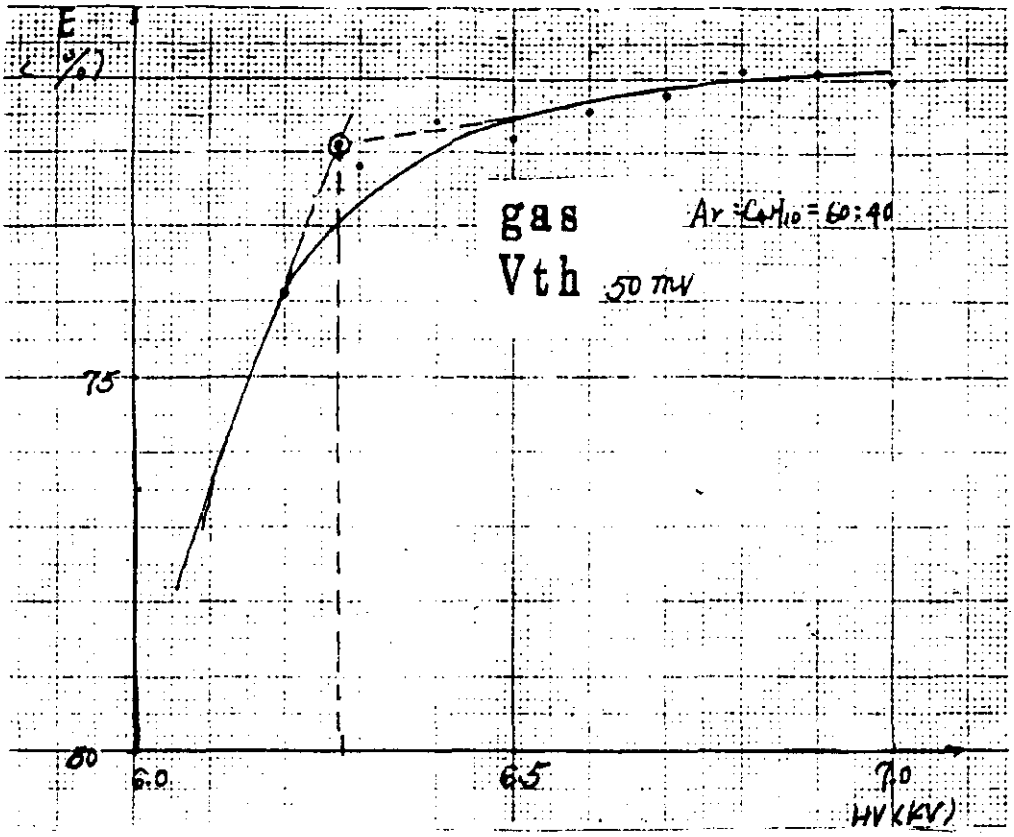

efficiency versus voltage HV
glass RPC E=95%

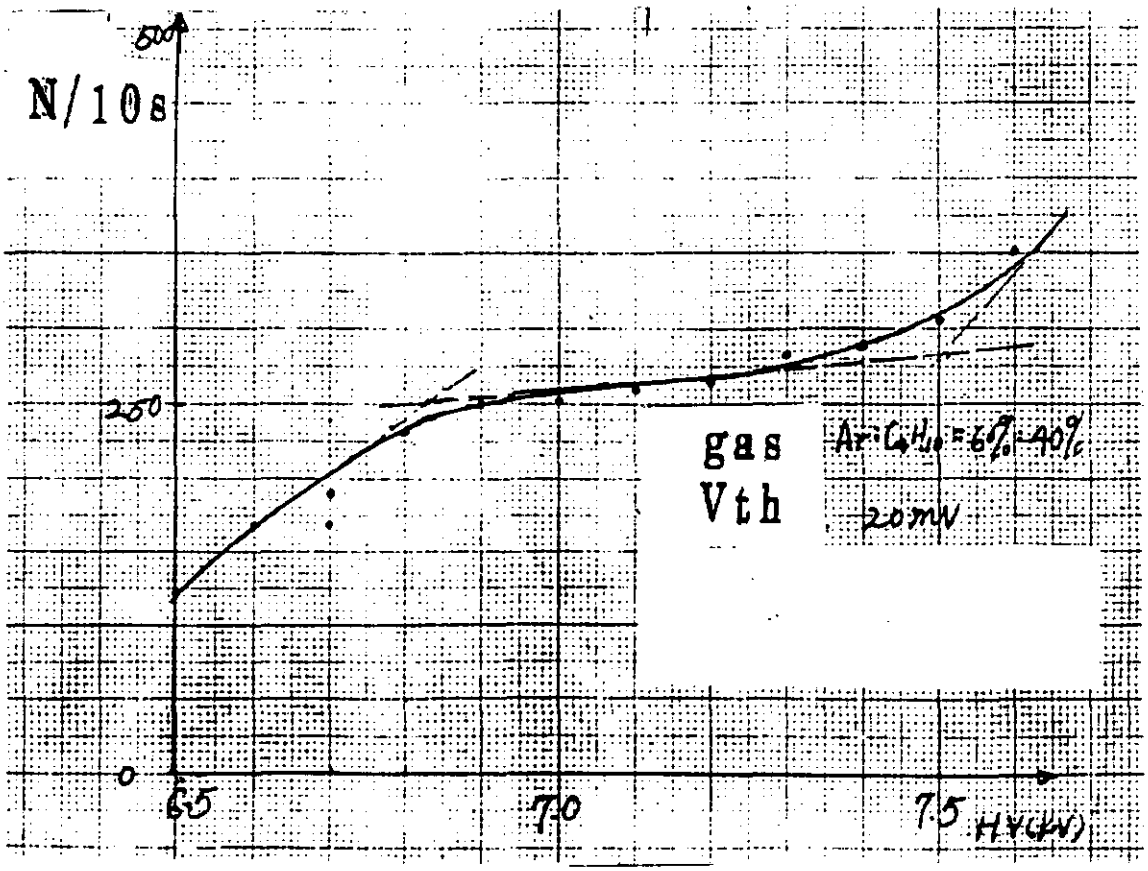

plateau of glass RPC
length > 600V

investigated materials of resistive plate in China

material	ρ	ε	Vkne kV (calculated)	
glass				
ordinnary	3×10^{10}	5-10	6.9-5.7	✓
YH-40 flat	2×10^{11}	5.95	6.5	✓
YH-60	4×10^{10}	5.95	6.5	
PS (Shanghai)	3×10^{12}			✓
bakelite				
ordinary	3×10^{10}	5.5-6.0	6.6-6.45	✓
3021	1×10^{12}	6.0	6.45	✗
PVC	10^{15}	2.55	9.3	✗
epoxy	10^{14}	3.6	8.1	✗

chosen $\rho=10^{11}-10^{12}$ $\varepsilon=5-7$

electric field in gap increases with increasing ε, but become stable larger than $\varepsilon=7$.

our recent (experiments : calculation -- consistent).

floating glass flatness good, satisfiy large area manufacturing,
strengthened PS (pirgindon) avoid from break

GEM R&D : glass
Bakelite
[illegible] material

2) PSDT (plastic streamer drift tube)

Investigate the drift characteristics of plastic streamer tube (PST) help to understand LSDT of GEM

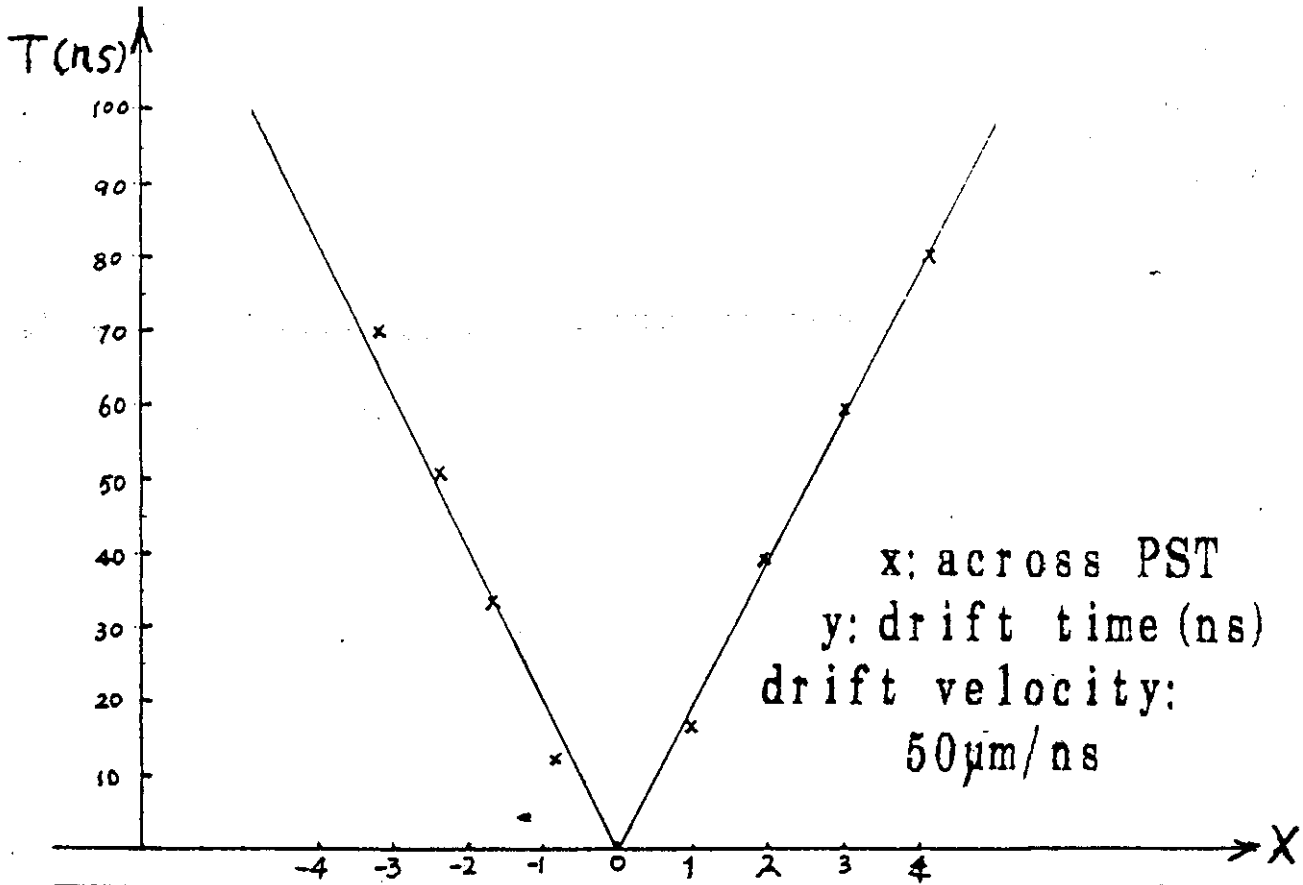

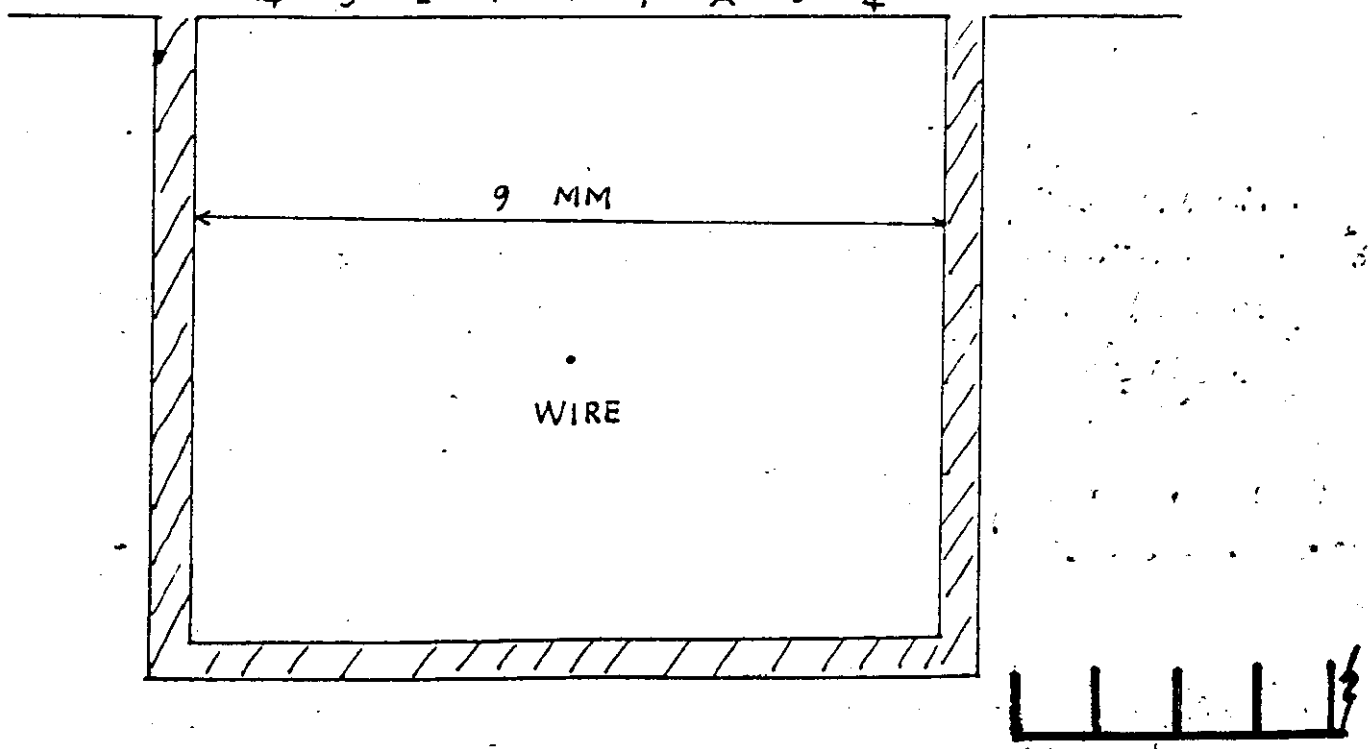

PSDT space-time relationship

0.25mm thin folded Al profile (LSDT) investigated

3) centroid on cathode strip using PSDT (Iarocci tube)

$$\sigma_c = p\left[\ln \frac{h^2(M)}{h(M-1)\cdot h(M+1)}\right]^{-1/2}$$

$$X_c = \frac{\sigma_c^2}{2p} \ln\left[\frac{h(M+1)}{h(M-1)}\right] + X_c(M)$$

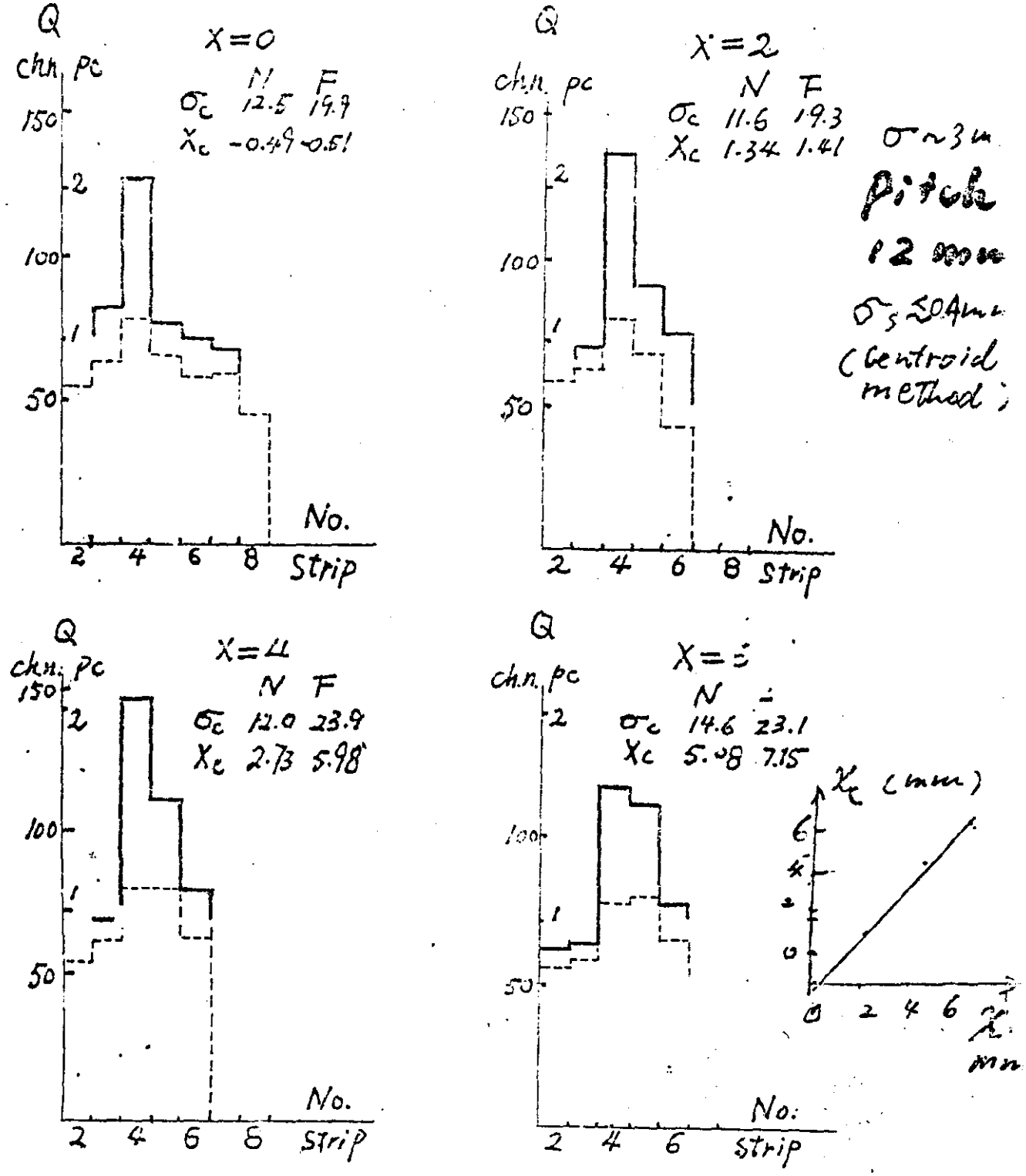

p strips