GEM TN-92-173

Report of the BaF_2 Expert Group

September 1, 1992

Abstract:

The BaF_2 expert group met on August 31, and September 1, 1992 at the SSC Laboratory to review new data regarding radiation damage issues on BaF_2 crystals obtained since the August 3-4, 1992 BaF_2 Panel meeting. This BaF_2 expert group, comprised of a sub-set of the original Panel members, was convened at the request of the spokesman for the BaF_2 collaboration, Professor Harvey Newman, with the authorization of the GEM Detector Management. Data was presented on the first day by various researchers, including the proponents of BaF_2 Electromagnetic Calorimeter. This data included new results of optical annealing of radiation damaged crystals as well as the implementation of annealing methods and systems in-situ. In addition new information was presented by representatives from the Shanghai Institute of Ceramics/Chinese Academy of Sciences on barium fluoride crystal production issues.

Report of the BaF_2 Expert Group

after its meeting of August 31 - September 1, 1992

Abstract

The BaF_2 expert group met on August 31, and September 1, 1992 at the SSC Laboratory to review *new* data regarding radiation damage issues on BaF_2 crystals obtained since the August 3-4, 1992 BaF_2 Panel meeting. This BaF_2 expert group - comprised of a sub-set of the original Panel members[1] - was convened at the request of the spokesman for the BaF_2 collaboration, Professor Harvey Newman, with the authorization of the GEM Detector Management. Data was presented on the first day by various researchers, including the proponents of BaF_2 Electromagnetic Calorimeter. This data included new results on optical annealing of radiation damaged crystals as well as the implementation of annealing methods and systems in-situ. In addition new information was presented by representatives from the Shanghai Institute of Ceramics/ Chinese Academy of Sciences on barium fluoride crystal production issues.

1. Summary

At the last meeting of the BaF_2 Panel on August 3 and 4, 1992 it was recognized[2] that optical annealing of radiation damaged BaF_2 crystals "could make a calorimeter satisfying GEM's specification using present production crystals." The panel recommended that "this issue should be studied without delay." In the last three weeks new data on optical annealing including characterization of the spectral behavior, required intensity, and rate of bleaching has been obtained.[3]

Based on the data presented by researchers from 5 independent institutions, including Brookhaven National Laboratory (BNL), California Institute of Technology (CIT), Lawrence Livermore National Laboratory (LLNL), Tsing Hua/McGill University, and West Virginia University (WVU), the expert group concludes that **optical annealing of radiation damage in BaF_2 with low intensity, visible light can essentially eliminate the radiation induced absorption of the fast component of the scintillation light.**

In addition, there is a strong indication that in-situ illumination of the crystals while subjected to a radiation environment can counteract the effect of radiation-induced absorption. This optical annealing is effective for removing damage induced by both hadrons and gammas. Further, the level of annealing in the crystals is dependent on the wavelength of the bleaching light, with shorter wavelengths leading to greater and more rapid recovery.

We conclude that the issues of self-recovery, non-uniformity and non-saturation as stated in the Panel report of August 3-4 have been overcome. This means that the current quality of the production crystals available from China is sufficient to meet all GEM specifications as presented to the BaF_2 Panel.

2. New Experimental Facts

A. Visible light (i.e., $\lambda > 400$ nm, for which the presently proposed photodetectors have minimal sensitivity) removes all the visible absorption and nearly all of the UV absorption due to radiation-induced damage in BaF_2 crystals (see accompanying Table and Figures in Appendix I). This is because induced defects have multiple absorption bands throughout the spectrum. Bleaching one component band can destroy all bands associated with that absorption center.

B. Experimental results indicate that the amount of light needed to overcome the radiation-induced absorption at 400 rad/hour, typical of the dose rate expected at h = 2.5 in the GEM detector, is of the order of milliwatts/cm^2. This intensity is easily accommodated by standard silica fiber-optic technology.

C. The total amount of light required to achieve the necessary optical annealing in the calorimeter is estimated to be of the order of kilowatts and appears to be within the scope of standard laser or high intensity lamp technology.

D. Results from WVU and CIT indicate that visible light annealing exhibits a time behavior characterized by a rapid bleaching of absorption centers followed by a longer term recovery.

E. For a given wavelength of annealing light, the rate of photobleaching appears to reach a constant level after a time, related to the absolute intensity of the annealing light. Application of additional light of shorter wavelength then causes a further photobleaching to an improved level of absorbance at 220 nm.

F. Calculations indicate that by monitoring the absorbance of the crystals in the calorimeter, optical annealing can be utilized to tailor the crystals in different parts of the calorimeter in order to optimize performance.

3. Crystal Growth

As mentioned in the Section 1, currently available crystals from China can meet or exceed the GEM specification for optical clarity utilizing optical annealing. Because of this fact, the current quality of raw material available in China is sufficient. At present, material of the requisite quality is being manufactured in batch sizes of several hundred kilograms. Therefore, a development program to scale up to full production is not required. There is a high confidence level that the same quality material can be manufactured by different sources.

A prototype production furnace capable of growing 15-20 crystals in a single run has been constructed and is being commissioned at the Beijing Glass Research Institute. In addition, improvements in the vacuum system have been implemented in an existing furnace at Shanghai Institute of Ceramics, however no crystals from this furnace have been made available for study at this time.

Improvements in optical quality of the Chinese BaF_2 crystals after irradiation, reported in the December, 1991 BaF_2 Panel Meeting, were initially attributed to the addition of a scavenger, designated "703." Since that time, improvement in the quality of raw material (reduction of OH content) has led to a cessation of the use of 703 and a return to the well-proven technique of scavenging with PbF_2.

Extensive chemical and structural analysis was performed on one of the FNAL (T-series) crystals and one of the new, more radiation-hard SIC (S-series) crystals. The two major differences found between these crystals were the presence of 2 orders of magnitude (11,000 ppmw) greater concentration of strontium in the T-series crystals and improved structure in the new S-series crystal. More work is needed to unambiguously establish the link between chemical and structural characteristics and radiation hardness.

Since the last Panel meeting, two growth runs were completed at Optovac. The first using ordinary grade powder and the second using custom-manufactured material of higher chemical purity. Samples from the first run were sent to WVU and annealing measurements have been made. Also, a sample from this run, sent to CIT, was tested by irradiation to 1 Mrad and optically annealed. The results obtained by WVU and CIT are consistent with each other, showing similar radiation sensitivity.

Samples from the second run were only made available to CIT on August 28 and there has not been sufficient time to perform measurements on these crystals. Samples from this run were also sent to BNL at the same time.

LLNL is currently growing crystals using high grade source material in both zone-refining and Czolchrowski melt furnaces. Crystals will be available for analysis in early September.

4. Mechanical Processing in China

A number of site visits have been made by physicists and engineers to facilities in China that have the capability to mechanically process the BaF_2 ingots into their final shape and surface finish. Based on the assessment of these facilities by experts on mechanical and optical processing, there is sufficient expertise and capability in China to process the full 16,000 crystals needed for the calorimeter, provided there is the expeditious implementation of the required number of cutting, grinding and polishing machines,.

In addition, the technology needed to achieve high quality surfaces and UV reflective coatings is being transferred to the Chinese. Recent visits have resulted in the production of crystals in China with surface finishes rivaling the best achieved in the US.

5. Conclusions

The data presented to this group is very encouraging and we recommend that work continue on the effects of optical annealing of radiation-induced damage in BaF_2. Among the subjects to be studied are:

A. Further quantify the effects of light intensity, and wavelength dependence on annealing.
B. Irradiate crystals to different total dose levels in the range of 1 krad to 50 krad followed by optical annealing in order to study the effect of the amount of induced damage on the bleaching rate.

C. Perform in-situ illumination of full-sized crystals during irradiation using prototype fiber-optic light delivery systems.

D. Investigate potential light sources for optical annealing and delivery systems.

References:

1. Members of the BaF_2 Expert Group were: Dr. Paul Schotanus - Chairman, Dr. Robert Sparrow, Dr. Michael Strathman, Dr. Larry Halliburton, Dr. Craig Wuest, and Mr. Baruch (Ben) Fuchs.

   Additional Attendees and/or Presenters: Prof. H. Newman, Prof. R. Zhu, Prof. Z. W. Yin, Prof. Y. Kamyshkov, Prof. R. C. Shang, Prof. J. Branson, Prof. H. Kobrak, Prof. Y. N. Guo, Prof. X. Q. Yu.

2. "Report of the the BaF_2 Panel after its third meeting on August 3-4, 1992," Prof. Stan Majewski, Chairman, August, 1992.

3. "BaF_2 Meeting - SSCL," GEM TN-92-166, August 31, 1992.

4. "Monte Carlo Studies for BaF2 at ORNL," Progress Report presented at August 3-4 Panel Meeting by Prof. Y. Kamyshkov, Oak Ridge National Laboratory, July 31, 1992.

5. H. Newman, Spokesman, "GEM Detector BaF_2 Precision EM Calorimeter Selection Report," August 25, 1992.

6. Da-an Ma and Ren-yuan Zhu, "Light Attenuation Length of Barium Fluoride Crystals," CALT-68-1811, GEM TN-92-148, August 30, 1992.

7. L. E. Halliburton, G. J. Edwards, M. P. Scripsick, "Effect of Optical Bleaching on Radiation-induced Defects in BaF_2," West Virginia University Technical Report, August 31, 1992.

8. C. R. Wuest and G. J. Mauger, "Effects of Light Exposure on Irradiated Barium Fluoride Crystals," Lawrence Livermore National Laboratory, August 27, 1992.

9. S. P. Stoll, "UV and Visible Light Bleaching of Radiation in SIC BaF_2 Sample #SIC703," Brookhaven National Laboratory, August 24, 1992.

10. Da-an Ma and Ren-yuan Zhu, "On Optical Bleach of Barium Fluoride Crystals," CALT-68-1812, GEM TN-92-149, August 30, 1992.

11. Y. N. Guo, "Constructing Cosmic Ray Test Stand at IHEP & USTC for GEM BaF2 Calorimeter," August 30, 1992.

12. C. R. Wuest, B. Fuchs, and W. Kway, "Barium Fluoride R&D at LLNL," GEM TN-92-168, July, 1992.

APPENDIX I

Measurement of Light Attenuation Length at 220 nm before irradiation, after irradiation to approximately 1 Mrad (Co-60), after bleaching with 488 nm (Ar^+ laser), and after additional bleaching with > 340 nm light (Hg lamp).[7]

		Light Attenuation Length (LAL) at 220 nm			
Sample	Length	As-received	After 1 Mrad	After 488 nm	After >340 nm
Optovac	12.5 cm	315 cm	21 cm	75 cm	108 cm
SIC S106	2.5 cm	>400 cm	23 cm	96 cm	338 cm
SIC (FNAL)	12.5 cm	>400 cm	33 cm	229 cm	315 cm
SIC (FNAL) (repeat)	12.5 cm	>400 cm	33 cm	199 cm	315 cm

Specification set by the GEM Executive Committee in March, 1992:

LAL (@ 220 nm) - unirradiated crystals - 190 cm

LAL (@ 220 nm) - irradiated crystals - 95 cm

Figures:

These figures are meant to show the general effects of optical annealing as well as current work on simulations and engineering of an annealing system and are by no means a complete representation of the data that was presented to the expert group.

1. Measurement of optical bleaching of 12.5 cm SIC (FNAL) crystal from Reference 7. The top figure shows the as-received absorbance (curve F) followed by the absorbance after 1 Mrad irradiation (curve A) and a series of optical bleachings using 488 nm laser light over a period of 80 minutes. The bottom figure shows the data beginning with curve E on an expanded vertical scale. Continued bleaching with 488 nm light is shown in curve G, followed by additional bleaching with >340 nm light (curve H) and full UVexposure (curve I). Curve I is seen to fall very nearly on the original as-received curve F. The spectral absorbance data shown here is valid for wavelengths greater than 200 nm. The data for wavelengths less than 200 nm is not accurate due to limitations in the spectrophotometer system.

2. Measurement of optical bleaching of 20 cm long trapezoidal BaF_2 crystal (40 mm x 40 mm at the larger end and 34 mm x 34 mm at the smaller end) from Reference 9. This crystal is designated SIC703 and was manufactured at the Shanghai Institute of

Ceramics. The figure shows the behavior of the crystal exposed to various amounts of UV light after irradiation to approximately 2 Mrad of hadrons plus 1 Mrad of gammas (the hadron dose is estimated from TLDs used for gamma dosimetry and is approximately 4 times the indicated TLD dose). Optical bleaching was performed using an unfiltered mercury light source with emission in the visible and the UV. Dramatic recovery is noted after only 10 minutes of light exposure. Additional light exposure leads to further recovery as indicated in the figure. Additional data on UV and visible annealing can be found in References 3, 8 and 10.

3. Computer simulation of the light transport in a 50 cm long crystal illuminated by a single fiber in a particular injection scenario. This calculation was performed by E. Tarkovsky at ORNL. The 3-dimensional plots show the profile of the light at the corresponding position along the length of the crystal. Perfectly reflecting walls are assumed in this calculation. Near the top of the crystal the light is seen to be nearly isotropic in cross section. Diffuse scattering due to imperfect reflection at the walls and multiple reflections will further enhance this effect.

4. Proposed ORNL design for fixing fiber-optic cables to PMT prisms attached to the BaF_2 crystals (provided by M. Rennich).

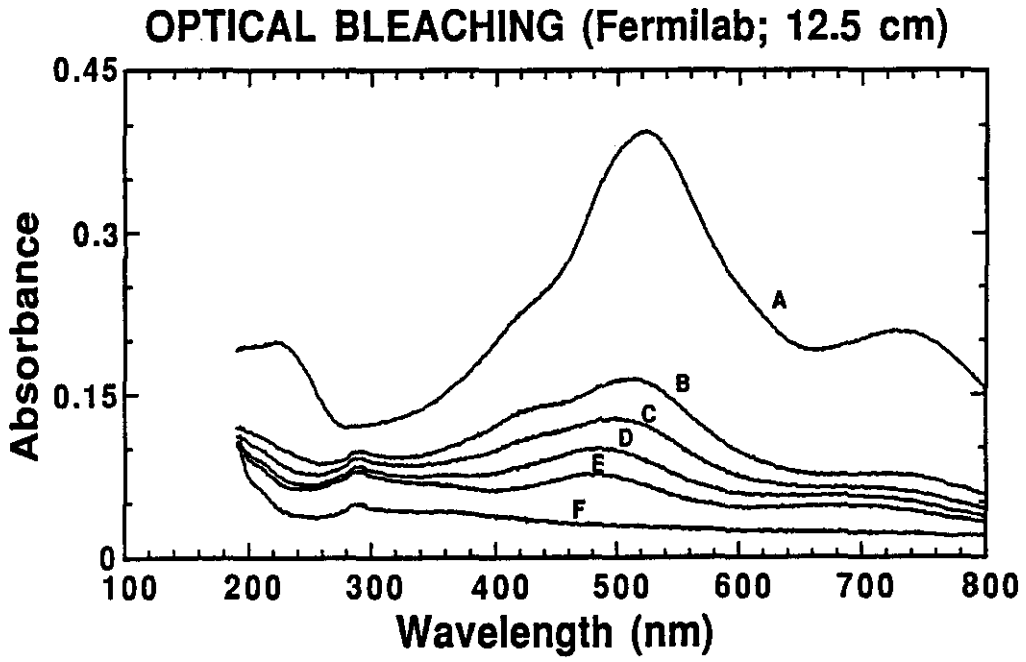

A: 24 hrs ^{60}Co irradiation
B: 10 min @ 488 nm
C: 20 min @ 488 nm
D: 40 min @ 488 nm
E: 80 min @ 488 nm
F: As-received

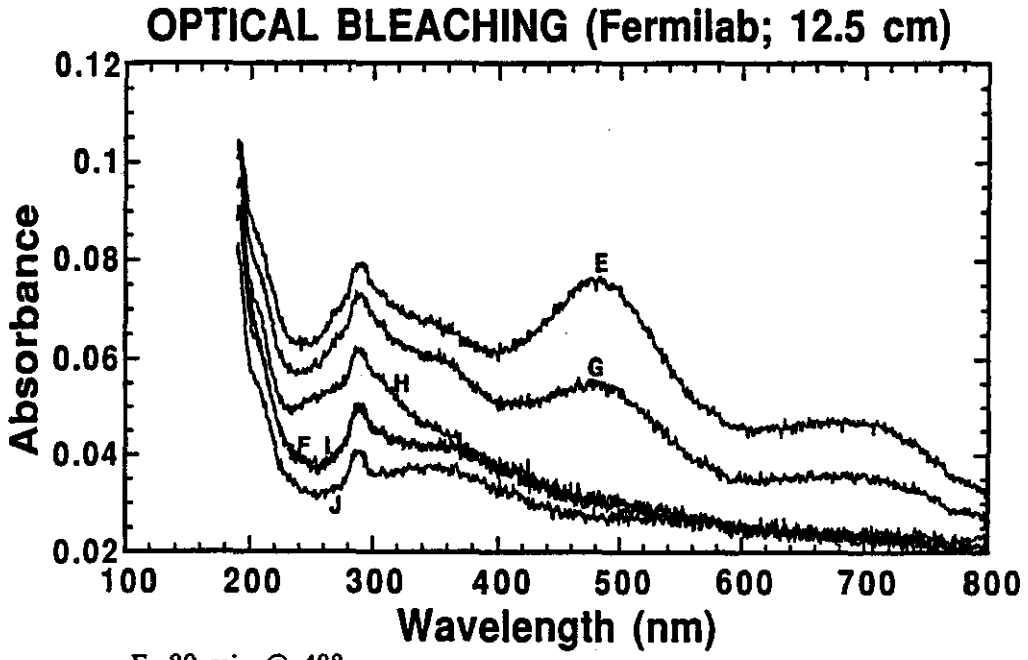

E: 80 min @ 488 nm
F: As-received
G: 160 min @ 488 nm
H: 10 min >340 nm
I: 10 min full UV
J: 3 hrs 500°C N_2 anneal

Figure 1

8/10/92

Radiation damage and recovery of SIC703 with exposure to direct UV light, and thermal annealing.

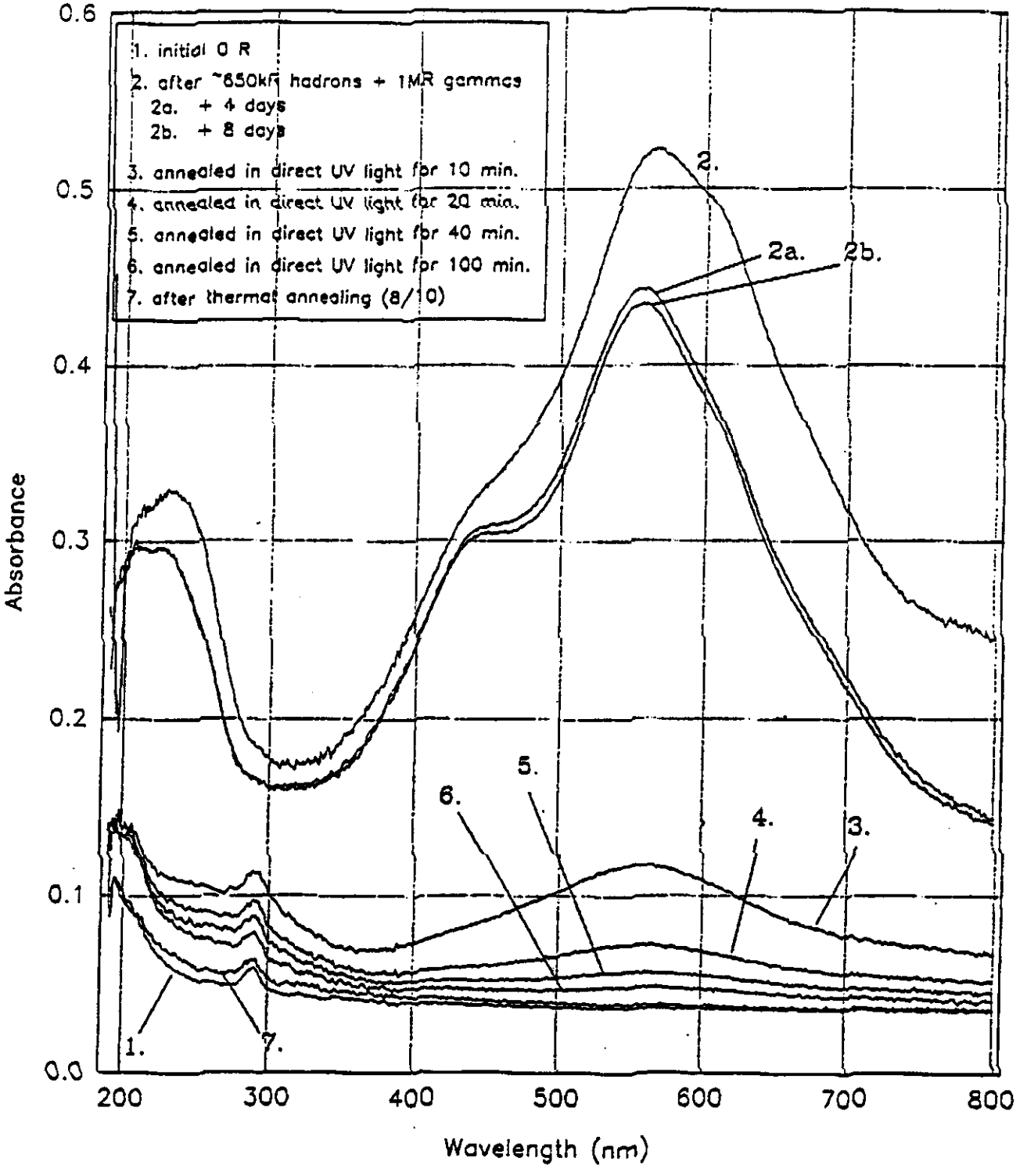

Figure 2

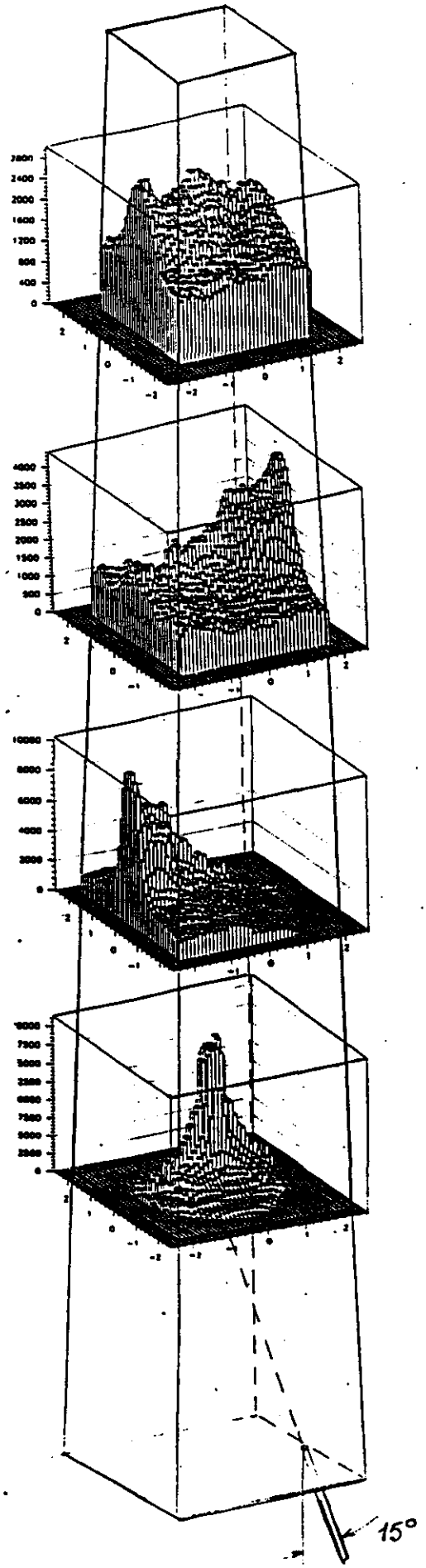

Figure 3

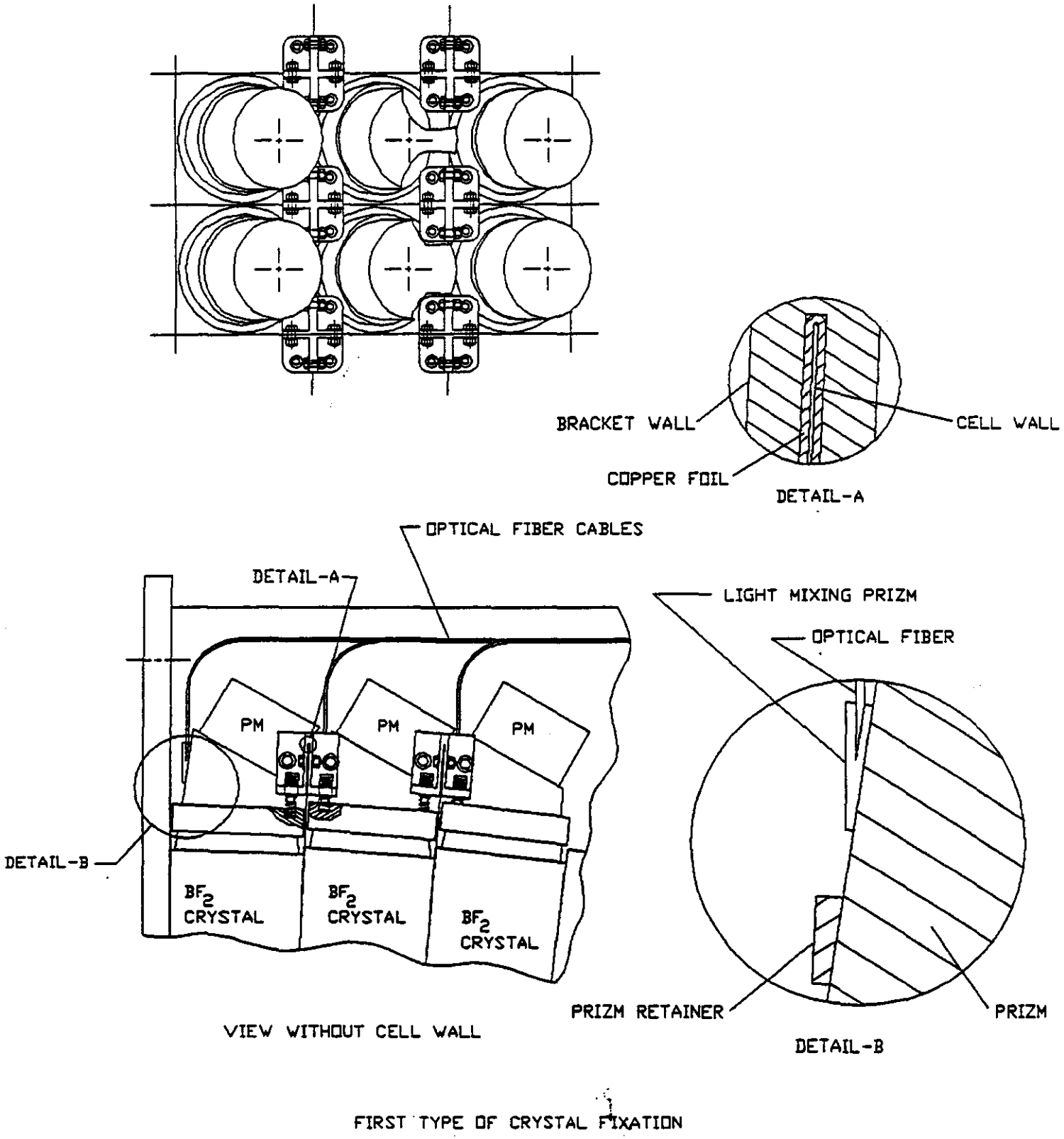

FIRST TYPE OF CRYSTAL FIXATION

Figure 4