GEM TN-92-171

Tsinghua - SSCL GEM Collaboration

Tsinghua University

August 30, 1992

Abstract:

The memorandum and proposal to establish an arrangement that Tsinghua University can most effectively perform collaboration on the GEM Project of the Superconducting Super Collider (SSC).

TSINGHUA–SSCL

GEM COLLABORATION

Tsinghua University
Beijing , China
Aug.30 ,1992

1. ORGANIZATION

2. MEMORANDUM AND PROPOSALS

Address:
TSGC
Engineering Physics Bldg
Tsinghua University
Beijing 100084, China

Fax : (861)256–8116
Phone: (861)2594660
(861)2594588

1. ORGANIZATION:

1.1 Board of Tsinghua–SSCL GEM Collaboration

Chairman : *Ni,Wei Dou*
Professor of Thermophysics
Vice–president of Tsinghua University

Vice Chairman : *Wang,Jing Jin*
Professor of Nuclear Electronics
Director of Tsinghua University Nuclear Instrumentation Center
Vice–president of China Nuclear Instrumentation Association

Wang, Yan
Manager of Science and Technology Projects of Tsinghua University

Qian,Yong Geng
Associate Professor of Nuclear Electronics
Engineering Physics dept.

Members : *Chen, Hong Yi*
Professor of Microelectronics
Deputy Director of Microelectronics Institute

Ding,Shen Xun
Professor of Physics
Vice–Chairman of Modern Applied Physics Dept.

Feng,Guan Ping
Professor of Transducer
Vice–Chairman of Precision Instruments Dept.

Zhong,Yue Xian
Associate Professor of Mechanical Engineering
Vice–Chairman of Mechanical Engineering Dept.

1.2 Executive Committee of Tsinghua–SSCL GEM Collaboration

Chairman: *Prof. Wang,Jing Jin*

Members : *Li,Da Cheng*
Professor of Precision Instruments
Director of Optical Instruments Group
Director of National Key Laboratory of Precision Measurement Technology

Qian,Yong Geng

Shang,Ren Cheng
Professor of Physics
Director of Nuclear Physics Group
Modern Applied Physics Dept.

Shi,Bing Xue
Professor of Microelectronics
Microelectronics Institute

Shi,Ke Ren
Associate Professor of Laser Welding
Mechanical Engineering Dept.

Wang,Yan

Secretary: *Liu,Ke Yin*
Engineering Physics Dept.
Nuclear Instrumentation Center

2. MEMORANDUM AND PROPOSALS

MEMORANDUM OF UNDERSTANDING

BETWEEN

THE GEM COLLABORATION
SSC U.S.A.

AND

TSINGHUA UNIVERSITY
BEIJING, CHINA

A PROGRAM OF COLLABORATION ON THE GEM PROJECT OF SSC

MAY 23, 1992

The objective of this memorandum is to establish an arrangement that Tsinghua University can most effectively perform collaboration on the GEM project of the Superconducting Super Collider (SSC).

Main collaboration mechanism is summarised below.

1. Tsinghua University will join the GEM collaboration and make contributions,which particularly toward building GEM, as well as operating experiment and producing physics results.

2. Tsinghua University Nuclear Instrumentation Center (TUNIC) will take the responsibility of this collaboration . The following departments are selected to be the participants at the first stage.

Dept. of Engineering Physics	Electronics and detector modules
Dept. of Applied Physics	Detector and experiments
Institute of Nuclear Energy	Gas detectors
Institute of Micro-electronics	Custom chips
Dept. of Mechanical Engineering	Laser welding and Mechanical structure
Dept. of Precision Instruments	Fine processing of optical crystals, Optical alignment
Dept. of Thermal Engineering	Thermal control and cooling system

3. Selected professors,engineers,postdoctors and technicians of

Tsinghua University will work on GEM project for SSC. The devices and material which should be purchased on the international market will be offered by SSC. The technical specifications, time schedule and total budget of a subproject of this collaboration will be signed case by case.

4. GEM will offer the complete R&D documents for prototype making and testing. SSC will support the visiting scholar or engineer of Tsinghua University to join R&D in USA before and after a contract of the related subproject has been signed.

5. Listed below are the most possible subprojects of GEM-Tsinghua collaboration.

   - Fine processing of BaF_2 crystals
   - Titanium cover for BaF_2 crystal
   - Prototype of electronics circuit board,mass production and testing for EM calorimeter,hardron calorimeter and Muon chamber.
   - BaF_2 / LAr detector assembling and testing.
   - Custom chips (Preamp, shaping amp, analog and digital pipeline ,ADC, etc.)
   - Composite structures.
   - Absorber plate for H-calorimeter and Muon chamber
   - Thermal control system.
   - Optical alignment of GEM detector.

Agreed

William J Willis

William Willis
Spokesman of GEM
collaboration
Date: 24 May 1992

倪维斗 (Ni Wei-dou)

Ni Wei-Dou
Vice-president of
Tsinghua University
Date: 24 May, 1992

A PROPOSAL

from

CHINA GROUP OF GEM ELECTRONICS

(Referred to as CGGE hereinafter)

AUG. 25, 1992

1. INTRODUCTION

During the First East Asian/Pacific-U.S.A. Symposium on SSC Physics, Experiments and Technology , Prof. Sheng Hua Yi stated on the GEM collaboration meeting that a China Group of GEM Electronics formed by Tsinghua University Nuclear Instrumentation Center (TUNIC) and Electronics Division of Institute of High Energy Physics (IHEP), Academia Sinica has been set up. The spokesmen are Prof. Wang Jing Jin of Tsinghua University and Prof. Sheng Hua Yi of IHEP (See COLLABORATION MEETING IN CHINA, MAY 20, 1992. GEM TN-92-112, p.240-248).

On the above-mentioned meeting, Prof. Bill Willis discussed about GEM electronics with CGGE members and suggested CGGE to join the steering group of GEM electronics.

A little later, the electronics division of USTC (University of Science and Technology of China, Hefei) joined CGGE.

As a GEM electronics delegation, Prof. Dan Marlow, Dr. Norman Lau and Dr. Bob Wixted visited China on July 18 through 26. They had site visit at Nuclear Instrumentation Center and Microelectronics Institute of Tsinghua University, Electronics Division and electron-positron collider (BEPC) at IHEP, P.C. Board Center and assembling workshops in Beijing and Shanghai.

"I am quite optimistic that we are on our way to a fruitful collaboration" concluded by Prof. Dan Marlow.

2. PROPOSED AREA OF CGGE PARTICIPATION IN GEM ELECTRONICS

2.1. Muon Electronics

For muon electronics, we would like to responsible for the whole CSC system. Since the Russian group has started the design work on an integrated JFET/Bipolar préamplifier/Shaper, we will mainly take on the problem of back-end readout electronics, which includes the "sampling device", the ADC and the digital readout. If necessary and/or possible, the assembly and test of the front-end electronics can be done by CGGE as well.

(1) Microelectronics

* Develop a switched-capacitor array (SCA) as an analog pipeline sampling at 10 Mhz.

The 2-μm process of CMOS has been well developed at Tsinghua University and we have made a kind of SCA for communication use.

* Develop a "pipelined" ADC working at 500 ns clock with 10-bit accuracy.

* Look into the possibility of combining this ADC with SCA in a single package .

(2) R&D

* Design the prototypes of P. C. Boards for pre-production.

* Design the logic control system.

* Design the calibration system.

* Design the interface to computer

* Design the test set-ups.

(3) Pre-production -- 1% of the total amount.

The capability of mass production and quality control will be assured by the Chinese Enterprises such as the P.C. Board Center, which are well equipped by US-Europe-made facilities.

(4) Mass production -- assembly and test of all the boards, modules and subsystems.

The surface mount production line will be available by the end of 1992 both in Beijing and Shanghai.

(5) Setup and commissioning of the CSC electronic system, including hardware and software.

2.2. Calorimeter Electronics

The items which can be done by CGGE for the calorimeter electronics are just similar to that of the muon electronics. Since the R&D of calorimeter electronics has been carried on in US for years, we would like to do the prototypes and mass production.

2.3. Other muon electronics other than CSC's, such as electronics for RPC, PDT or LSDT.

3. POSSIBLE STEPS OF COLLABORATION

1st step:

CGGE will carry on the R&D of GEM electronics in China based on the future agreement between CGGE and GEM Electronics Group.

The sub-projects and funding support from both sides will be arranged case by case.

Meanwhile, CGGE will send two or three persons to work with GEM Electronics Group in the States in order to make the requirements and technology clear. This is also important for smooth communication in order to keep CGGE following the research direction and schedule.

2nd step:

Based on the results of 1st step, a schedule of prototype making and mass production will be worked out. All the quality control and cost estimation issues will be eventually set up.

4. BACKGROUNDS AND FAVORABLE CONDITIONS

* Institute of High Energy Physics (IHEP) has successfully built the Beijing Spectrometer (BES) at the electron-positron collider (BEPC). Its high-performance 21376-channel electronics, using 6-layer board, hybrids and ICs, works very reliable for 3 years. An experienced team for designing and constructing the electronics for high energy physics has been formed.

* Tsinghua University Nuclear Instrumentation Center (TUNIC) has decades experiences in front end electronics and data acquisition system of low energy physics. Many modern multichannel analyzers and x-gamma-ray spectroscopes produced in China are of TUNIC origin.

* University of Science and Technology of China (USTC) has worked on waveform digitizing products with sampling rate up to 100MS/S and constructed a MWPC readout system with multi-CPU data acquisition structure.

* Now around 60 professors, scientists and engineers in CGGE can work for GEM electronics with their full time in the future years.

* The CGGE has been equipped with the facilities and instruments necessary for designing and testing a large electronics system, such as the advanced oscilloscopes, the high-grade microcomputers, the high performance logic analysers, a variety of precision pulse generators, the advanced CAD station et. al..
Lot of technique supports can be conveniently got from many factories in China. For example, the multilayer P.C. Board and the surface mount technology, hybrid chips and even custom IC.

* The labor rate in China is cheaper than in U.S.A.

* The stable situation in China provides a very good environment for carrying on the scientific research. The international scientific collaboration between Sino-USA will no doubt get the support from Chinese government.

5. SUGGESTION

CGGE suggests to send a small but formal delegation to GEM at certain suitable time in order to discuss the collaboration between GEM and CGGE in each aspect and finally to sign an agreement.

Contact Persons:

Prof. Wang, Jing Jin
TUNIC
Engineering Physics Bldg.
Tsinghua University
Beijing, China

FAX: (861) 256-8116

Prof. Sheng, Hua Yi
Electronics Division
Institute of High Energy Physics
Beijing, China

FAX: (861) 821-3374
E-mail: IGW::PSI%ESX25NET.IHEPVX::SHENGHY

Prof. Han, Rong Dian
Modern Physics Dept.
University of Science and Technology of China
Hefei, China

THE PROPOSAL ABOUT A LASER WELDING DEVELOPMENT PROGRAM FOR THE EM CALORIMETER SUPPORTING STRUCTURE

Keren Shi
Dept. of Mechanical Engineering
Tsinghua GEM Collaboration
Tsinghua University, Beijing China
Fax: (861)2568116

1. The problems of building the EM Calorimeter supporting structure.

1.1 Welding the titanium foil

According to the suggestion of SSCL, the EM Calorimeter supporting structure will be welded of Ti-3Al-2.5V and Ti-6Al-4V alloys in 0.1mm thick foil.

1.1.1 Properties of titanium, magnesium, aluminium, iron and copper

Property	Units	Ti	Mg	Al	Fe	Cu
Density (20°C)	lb/in³ Mg/m³ (g/cm³)	 4.50	 1.74	 2.7	 7.86	 8.92
Melting point	°F °C	3034 1668	 650	 660	 1539	 1083
Coef. of thermal expansion(20°C)	in.⁻⁶(in.°F) m⁻⁶/(m.°C)	4.7 8.4				
Thermal conductivity	Btu/(ft²·h·in·°F) W/(m·K)	111(68°F) 15(20°C)	 157.15	 200.83	 67.36	 384.10
Electrical resistivity(20°C)	(·cm)⁻⁶	42				
Specific heat [J/(kg.°C)]	Btu/(lb·°F) J/kg·K)	0.124(68°F) 522(20°C)	 1046.76	 895.78	 711.75	 380.99
Modulus of elasticity	10⁶psi GPa (N/mm²)·10³	16.8 117 117000				

1.1.1.2 The composition of Ti-3Al-2.5V and Ti-6Al-4V alloys(wt.%)

Alloy		Al	V	Fe	Si	C	N	H	O
Ti-3Al-2.5V		3.0	2.5	0.30		0.05	0.015	0.015	0.12
Ti-6Al-4V	α+β	5.5-6.8	3.5-4.5	0.30	0.15	0.10	0.05	0.015	0.15

1.1.1.3 The Mechanical properties of Ti-3Al-2.5V and Ti-6Al-4V alloys

Alloy	Tensile strength kg/mm2	Yield strength kg/mm2	Elongation, percent	Charpy V-notch impact energy, ft·lbs	the condition of heat treatment
Ti-3Al-2.5V	620Mpa 90 ksi	520Mpa 75 ksi			annealed
Ti-6Al-4V	90-100	80-90	10-15	10-20	annealed

1.1.2 The weldability rating of titanium alloys

The Ti-6Al-4V alloy has the best weldability of the alpha-beta alloys. It can be welded in either the annealed condition or solution-treated and partially aged condition. The titanium alloys can be welded by TIG, Plasma Arc, Electron Beam and Laser Beam. The Laser Beam welding is the best selection, because the thickness of this titanium alloy foil is only 0.1mm. There several concerns about welding titanium alloys including Ti-3Al-4V and Ti-6Al-4V alloys:

1.1.2.1 The weld will be embrittled by the titanium reacting with hydrogen, oxygen, nitrogen and carbon.

Titanium and it's alloys are very stable in room temperature. But it is easy to react with hydrogen, oxygen and nitrogen, if the titanium alloy was heated above 250°C(begin to react with hydrogen),400°C(begin to react with oxygen,600°C(begin to react with nitrogen). Fig.1 shows the results of test.

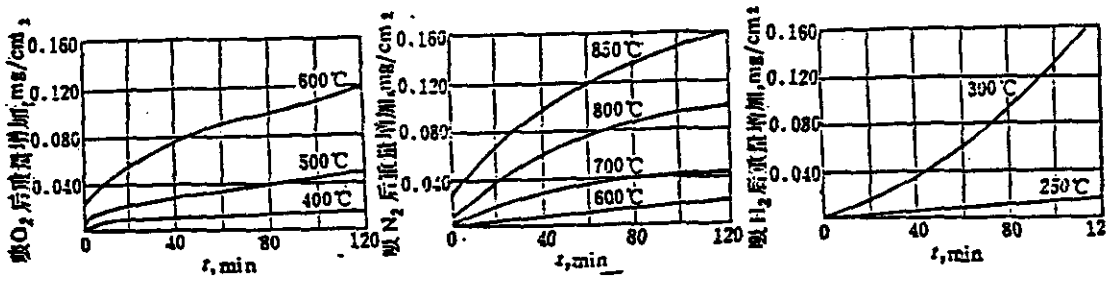

Fig. 1

If the content of hydrogen,oxygen and nitrogen in titanium increase, the Tensile strength of titanium alloy will be increase, but the Elongation,bend ductility and Charpy V-notch impact energy of titanium alloy will be reduce. Fig. 2 shows the effect of these contaminants on mechanical properties of titanium weld.

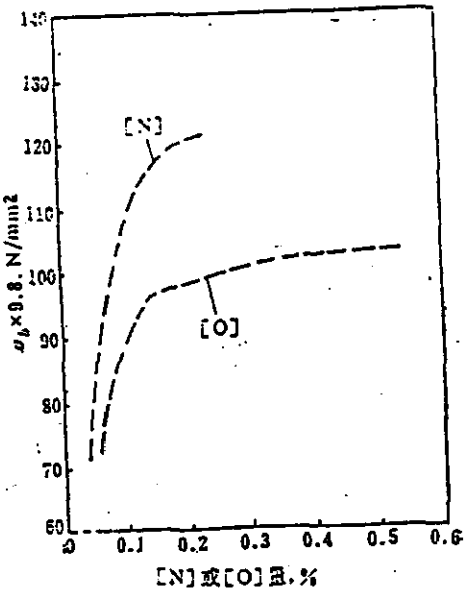

a)Effect of content of oxygen and nitrogen of weld on tensile strength of commercially pure titanium weld

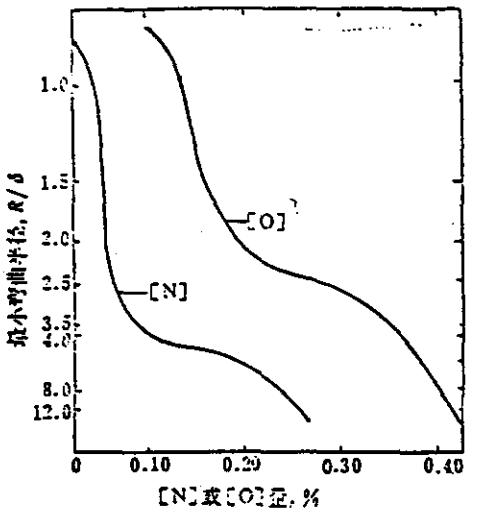

b)Effect of content of oxygen and nitrogen of weld on bend ductility of titanium weld

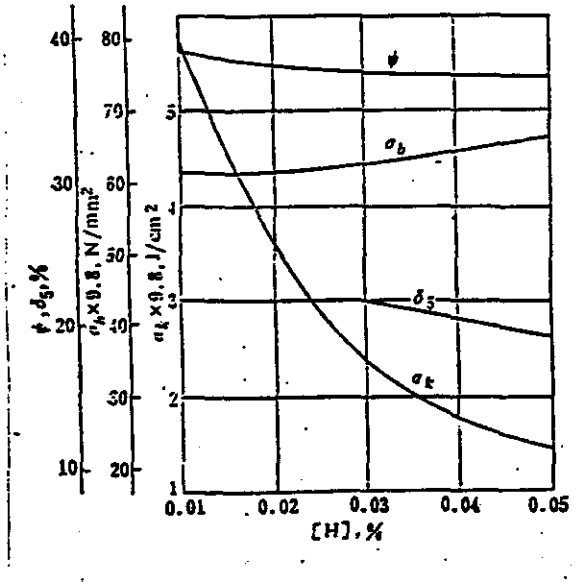

c)Effect of content of hydrogen of weld on mechanical properties of weld

Fig.2 Effect of content of hydrogen, oxygen, nitrogen of titanium weld on mechanical properties of weld.

If content of carbon of titanium is more than 0.1%, It will cause the welds to embrittle and crack.

To avoid the weld to embrittle and crack, It is necessary to note following:

- Prior to welding or heat treating, titanium components must be cleaned of surface contaminants and dried. Oil, fingerprints, grease, paint, and other foreign matter should be removed using a suitable solvent cleaning method.
- During welding, the portion to be heated above about 500°F(260°C) must be well protected from atmospheric contamination. Protection or shielding is commonly provided by inert gas, helium and or argon, cover in the open or in a chamber. Argon is cheaper than helium in China, therefore Argon will be used to shield the welding area. Since the weld joint is only 0.1mm wide, it is easy to shield the welding area by inert gas cover in the open. But the important thing is that the argon should be very pure, the contents of oxygen, hydrogen, nitrogen and water must be less than 0.001%.
- We have the experiences of welding titanium alloy, zirconium alloy by TIG welding and laser beam welding, we can do all things mentioned above.

1.1.2.2 Improve ductility of welding joint in Ti-3Al-2.5V or Ti-6Al-4V alloy

- The ductility of the weld in Ti-3Al-2.5V or Ti-6Al-4V alloy may be reduced. To improve ductility of welding joint, It is necessary to use the welding parameters to slow the cooling rate after welding and also to reduce the deformation of the structure. It is also necessary to test the bend radius of the weld joint to choice the suitable welding parameters.
- Weldment can be given an annealing heat treatment(1300-1450°F for 1-4h) to improve ductility of welding joints. But this method perhaps dos not suit with this structure, because it is difficult to keep the accuracy of the supporting structure and it may need a big vacuum annealing equipment.

1.1.2.3 Residual welding stresses

- Residual welding stresses can be sufficiently high to cause cracking and to promote stress-corrosion in sensitive titanium alloys. Also such stresses can cause weldment to have low endurance in high and low-cycle fatigue.
- When residual welding stresses are expected to be a problem, the structure should be heated to the proper temperature and held for sufficient time to relieve the stresses. An annealing heat treatment automatically relieves residual stresses. Generally, the minimum stress-relieving temperature is in the 1000° to 1300°F(538°-704°C)range for practical short-time operations (for example,1000-1100°F 0.5-2h for Ti-3Al-2.5V or 2-4h for Ti-6Al-4V). It is important to determine the desired mechanical properties in the weldment before selecting the temperature and time because aging can take place during stress-relieving of

heat-treatable alloys

- Before the weldment is heated it should be cleaned to avoid contamination and stress-corrosion cracking. After the heat treatment, any surface discoloration can be removed by chemical cleaning as described previously.

1.1.2.4 Porosity in welds

- Porosity in titanium welds is a persistent problem. Most, if not all, porosity is apparently caused by gas bubbles formed during solidification of the weld metal, and welding procedures and techniques can affect this. There appears to be no single source of the porosity in welds.
- Hydrogen in solution in metal is not a prime cause of porosity when it is within specification limits. Most specification limit the hydrogen content of titanium to 150 ppm or less,and it is usually less than 100 ppm. Porosity-free welds can be made in titanium when the hydrogen content is within specification limits.
- Filler metal addition can cause porosity if its hydrogen content is near the high end of the specification limit. Die lubricant worked into the wire during drawing is a major cause of porosity, and it must be removed prior to use. However, it is unnecessary to use the filler metal addition in this program.
- Another possible source of hydrogen is adsorbed moisture. Moisture can be evaporated by preheating the metal to about 250°F(121°C) before welding.
- Porosity is also influenced by the welding procedure and technique. Many of the welding variables are interrelated and the important ones are not readily identified. However, to avoid the porosity and hole in the laser weld in titanium it is important to keep the stability of the laser beam and its plasma during welding.

1.1.2.5 Brief summary

According to the weldabilty rating of titanium alloys mentioned above, There several concerns about welding titanium alloys including Ti-3Al-4V or Ti-6Al-4V alloys:

- The titanium alloy foil to be weld is in annealed condition.
- It is very important to clean the titanium alloy foil components by chemical cleaning and to dry before welding.
- During welding, the portion to be heated above about 500°F(260°C) must be well protected from atmospheric contamination by inert gas, such as argon, cover in the open.
- To avoid the porosity or hole in the laser weld in titanium alloys it is important to keep the stability of the laser beam and its plasma during welding and to use correct welding parameters.
- It is necessary to make that the residual welding stresses are not expected to be a problem, or to use suitable method to relieve the stresses.

2.Laser welding development program for building the EM Calorimeter structure.

2.1 The development of welding the 7x7 cells prototype

2.1.1 Fig.3 shows the structure of 7x7 cells prototype.

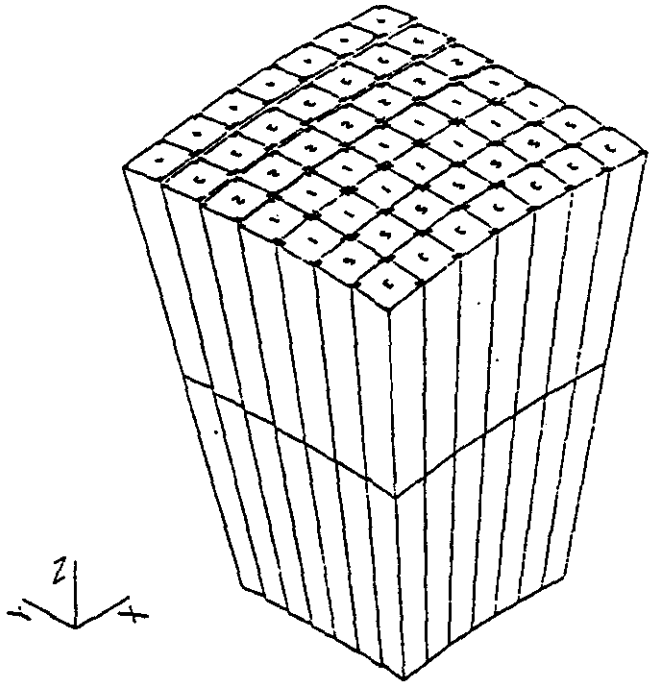

Fig.3 The structure of 7x7 cells prototype

The material of the prototype is titanium alloy, Ti-3Al-2.5V or Ti-6Al-4V, foil(thickness=0.1mm). The welding process is Laser Beam Welding. The welding parameters are about following:

Laser beam output power	400-700w
Welding speed	10-30m/min
The size of laser beam focusing spot	0.20-0.3mm
shielded gas	Argon

2.1.2 The key of welding the 7x7 cells prototype of the EM Calorimeter supporting structure.[besides the concerns about welding titanium alloys Ti-3Al-4V and Ti-6Al-4V mentioned above(see 1.1.2.5)].

2.1.2.1 fixing the titanium alloy foil components accurately

It is difficult to fix the titanium alloy foil component accurately, because the titanium foil is too thin to fixing it by common method. It is necessary to use the vacuum welding fixtures. Fig.4 shows the structure of one of the vacuum welding fixture we will use.

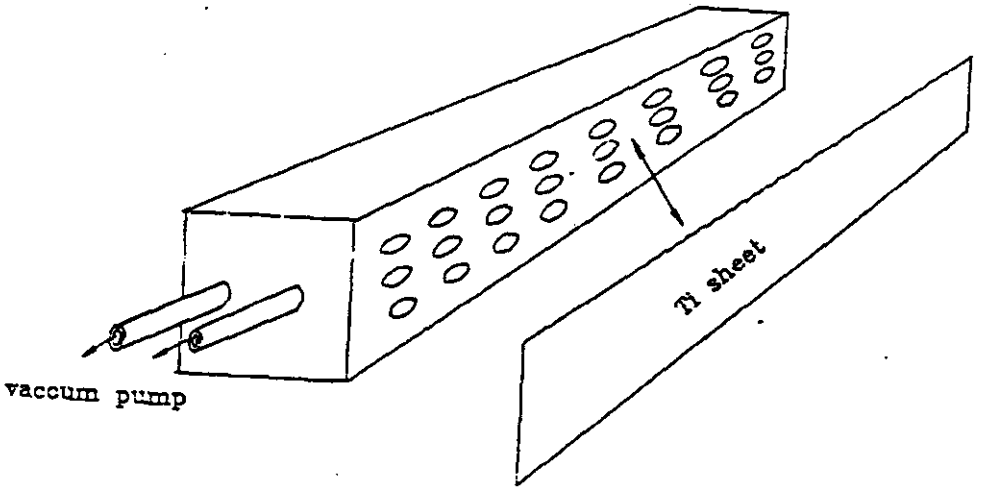

Fig. 4 The structure of vacuum welding fixture

2.1.2.2 To prevent welding deformation

The supporting structure is easy to be deformed after welding, because the structure is made from very thin titanium alloy foils. Therefore it is difficult to keep the accuracy of the supporting structure after welding. It may be necessary to use the big welding fixture to keep the shape and size of the supporting structure during welding. And it is benefit to increase the welding speed for reducing the welding deformation.

2.1.2.3 The quality of weld

The faults of weld which may form during laser welding are holes, oxidizing and misstracking. So it is necessary to use stable power and good quality laser beam, effective protection from atmospheric contamination in the welding high temperature area, above about 500°F(260°C), accurate CNC table and Robot etc..

2.2 The procedure of welding the 7x7 cells prototype of EM Calorimeter supporting structure.

Fig.5 shows the welding procedure.

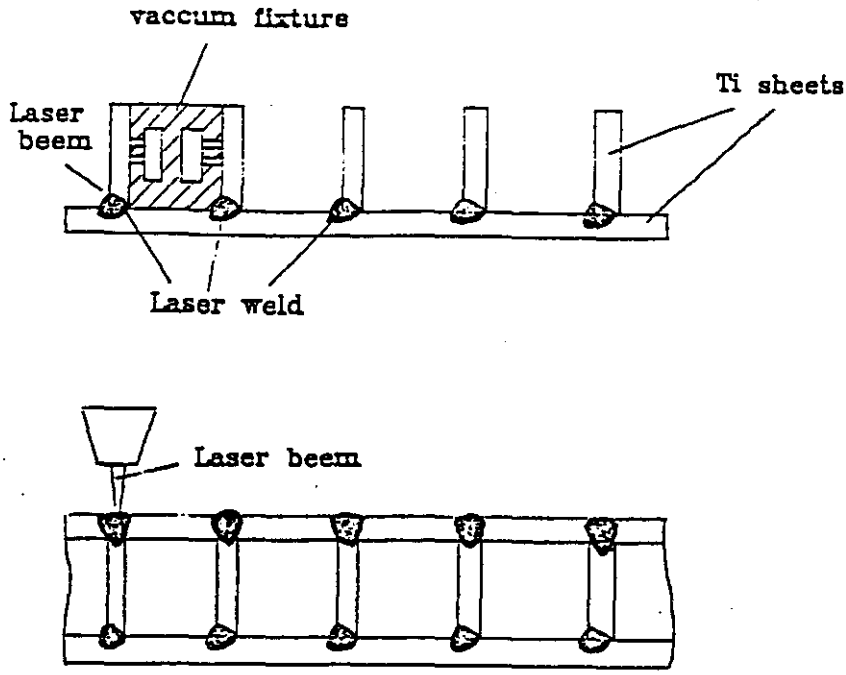

Fig. 5 The procedure of welding 7x7 cells prototype of supporting structure

Welding the bottom portion to the cells in the 7x7 prototype is easier than that procedure mentioned above. After several cells of the 7x7 cells prototype have been welded, the bottom titanium foils should be held on the vacuum fixture to fit together with the cells extremely well and then weld that.

2.3 Cost Estimate for welding 7x7 cells of GEM Detector Supporting structure

No	item	Labor k$	Material k$	Subtotal k$	Conting. k$	Total k$
1.	Total Costs	4.8	22.05	26.85	3.15	30.0
1.1	Ti alloy foit (0.1mm,16kg)	0.6	5.7	6.3	0.5	6.8
1.2	Moulds	2.0	7.0	9.0	0.6	9.6
1.3	Laser welding	2.0	9.0	11.0	2.0	13.0
1.4	Testing	0.2	0.35	0.55	0.05	0.6

3. Welding the EM Calorimeter Supporting Structure

Welding the EM Calorimeter Supporting Structure is more difficult than the 7x7 cells prototype. Fig.6 shows an example of the welding procedure.

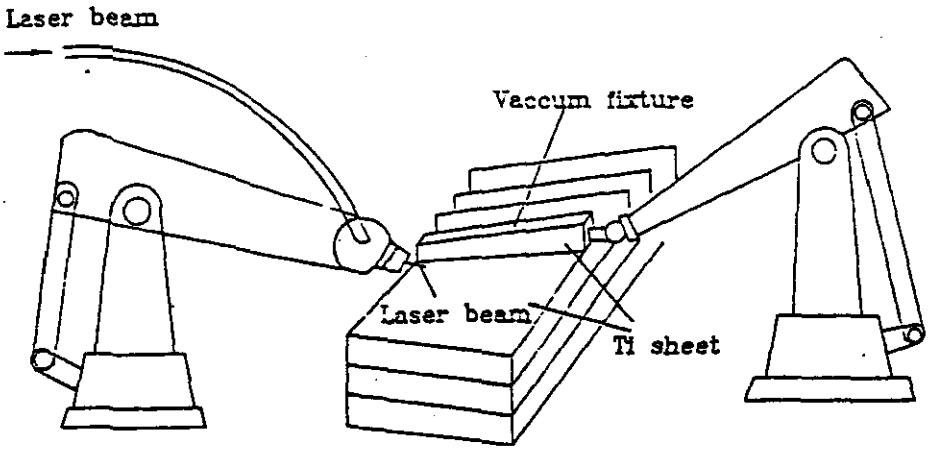

Fig.6 A welding procedure example of the EM Calorimeter supporting structure

4. The condition of our laboratory

4.1 The equipment we have to weld the 7x7 cells prototype of the supporting structure.

4.1.1 Laser machine(PRC-3000):

Power	100-2800W
The frequency of pulse	0-2000Hz
Mould	D or Q
Focusing size	0.2mm

4.1.2 Welding Robot (can be used to hold the vacuum welding fixture)

The specification of this welding robot

Structure: Eructated axes type design.
Number of axes: 6 electrical drive axes

Drive system and
position signal encoding: AC servomotors and absolute encoders.

Drive capacity: 2501 W(6 axes total).

movement range: Axis 1 +- 170° (340° total)
Axis 2 +90° to -150° (240° total)
Axis 3 +150 to -120° (270° total)
Axis 4 +-180 (360 total)
Axis 5 +230 to -50 (280 total)
Axis 6 +-200 (400 total)
X-Angle +150 to +20 (130 total)

protection for limiting

axes movement: Software limits (all axes), overrun limit switches(electrical stops on Axis 1 and 2),and mechanical end stops (hard stops on Axis 1,2,3,4,and 5)

Maximum speed: Axis 1-110 /sec.
Axis 2-100 /sec
Axis 3-125 /sec
Axis 4-280 /sec
Axis 5-270 /sec
Axis 6-400 /sec

Automatic mode: Position (P or Q) speed is 100% of each individual axis maximum speed;linear(L) or circular(C) welding or nonwelding speed is 234ipm (600cm/min)

Cross sectional area of arm movement: 24.2sq.ft.x340° (2.25m² x340°) Maximum weight capacity at welding gun/torch mount: 13.2 ibs.(6kg).

Movement repeatability: Within +-0.004in.(+-0.1mm).

Torch operating position: Setting desired torch angle and orientation are possible regardless of changes to manipulator arm position

Servo power warning lights: Illuminate when servo power is turned on.

Ambient temperature and Humidity: 32° to 104° F(0° to 40°) 20% to 80%RH(without condensation)

3.2 The experiences of laser welding

There are several projects of laser welding and processing we have researched in our laboratory. And two scientists who work in our laboratory now have been in Laser Laboratory of Liverpool University U.K. for laser welding and processing research one year. The thin foil(thickness>=0.1mm) have been welded using Laser Beam in our laboratory.

Our laboratory is at the top of welding laboratory in Universities of China. There are Welding Technology section, Welding Material section, Welding Structure section, Automated Welding section(weld tracking,Robot welding), NDT section and Laser processing section cte. in our laboratory.

Date: July 22, 1992

Specification for An Instrument Inspecting BaF2 Crystals

Li Dacheng, Wang Dongsheng
Yu Guanzheng, Zhang Yunxiang

Dept. of Precision Instruments
Tsinghua-GEM Collaboration
Tsinghua University, Beijing China
Fax: (861)2568116

1. INTRODUCTION

This instrument has the performance which can inspect dimensions of BaF2 crystals (flatness, perpendicularity, contour, and all dimensions).

Using the instrument, five types of crystal pairs (25 pairs, or 50 individual crystals) can be inspected. It can measure dimensions of crystals not only 250 mm, but also 500 mm.

After each cutting operation, the crystal shall be given an in-process dimensional inspection to check flatness, perpendicularity, contour, and dimensional tolerances, and assess the need to rework the crystals by lapping.

All measured dimensions for each crystal can be recorded on an inspection report.

Each front and rear crystal can be unequally marked by a three character designation. The first character is the number 1,2,or 3, corresponding to the theta row. The second character is an R or L for right hand crystals or left hand crystals. The last character is the contour of A,B, and C plane, the perpendicularity, the flatness and so on.

After cutting, chamfering, and marking, each crystal can be given a final inspection to check if all measured dimension are within the stated tolerances.

2. GENERAL SPECIFICATIONS OF THE INSTRUMENT

2.1 MEASURING PRINCIPLE:

The principle is comparing crystals measured with a standard specimen using inductive gauging heads.

2.2 MEASURING OBJECTS:

Flatness, perpendicularity, contour, and dimension of all crystals which include both dimensions of 250mm and 500mm.

2.3 MEASURING PRECISION:

Resolution of inductive gauging head: 0.3μm
Measuring range of inductive gauging head: 2mm
Measurement precision: +-3μm

2.4 OUTPUT

Printer and screen.

3. A comparison between the new instrument and that used by Shanghai Institute of Ceramics (SIC):

Items	the new instrument	SIC's instrument
Measuring range	0-250mm and 0-500mm	0-250mm only
Measurement software	all measured objects	No
Resolution	0.3μm	0.5μm
Precision	+-3μm	+-5μm
The number of inductive gauging heads	84 heads	42 heads

4. Research and produce time:

One and half years after received research funds.

5. PLAN SCHEMATIC

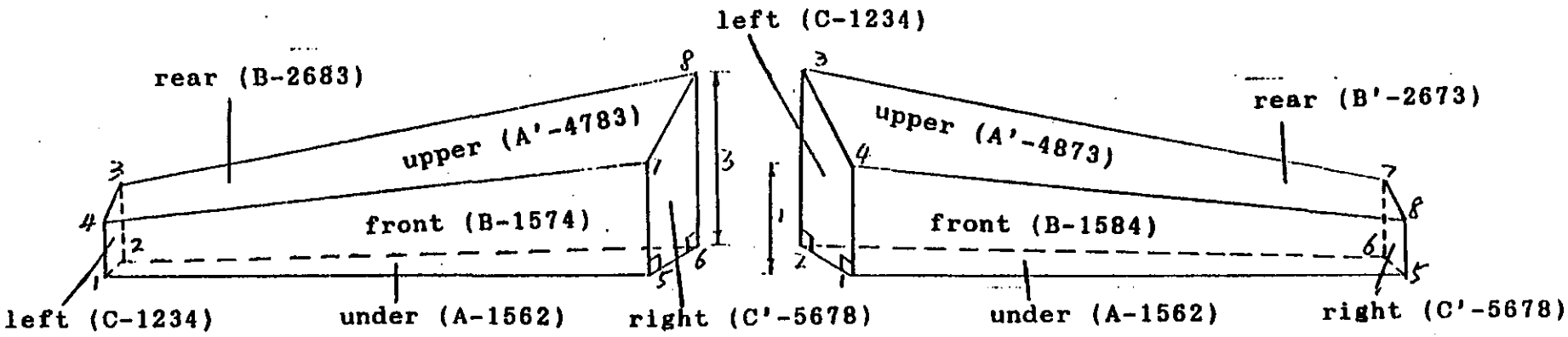

Both left hand and right hand crystal can be measured on the device:

For the three kinds LH and RH specimens:

$$\left\{\begin{matrix} (A4-A2) & (A3-A1) \\ (B4-B2) & (B3-B1) \\ (C4-C2 & (C3-C1) \end{matrix}\right\} \begin{matrix} =0.15\text{mm} \\ \text{max} \end{matrix}$$

So, they can be put into one fixture, only the measured data of upper surfaces are different.

The measuring range of sensor is 2mm (much greater than 0.15mm). It is not needed to adjust the sensors while measuring all crystals.

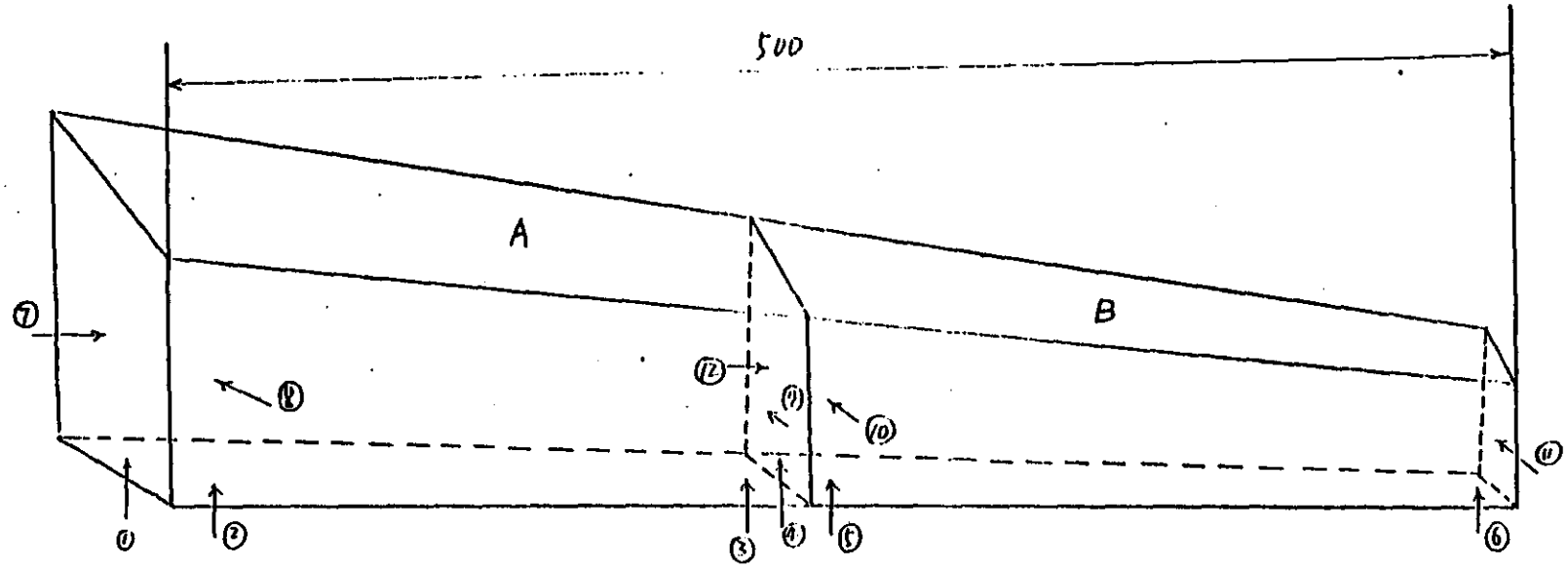

Distribution of supporting points

Points (1),(2),(3),(7),(8),(9) are used for supporting A.
Points (4),(5),(6),(10),(11),(12) are used for supporting B.
Points (1),(2),(6),(7),(8),(11) are used for supporting the combination of A and B. At this case the points (3),(4),(5),(9),(10), are not contacted with the combination of A and B.

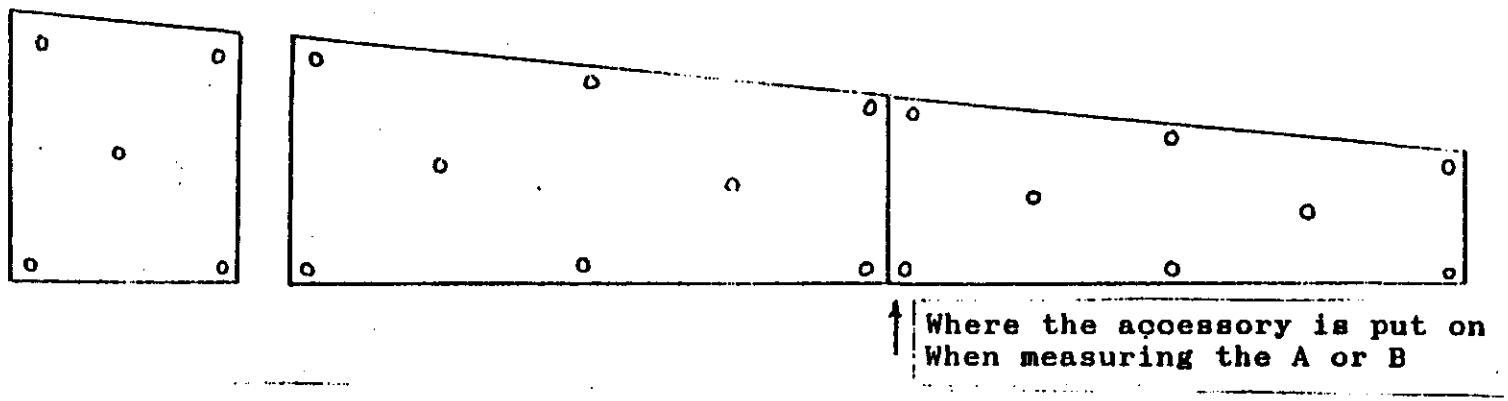

Distribution of measuring points

There are 8 measuring points on every one of 4 larger surfaces for individual of A or B. There are 5 measuring points on every one of 2 side surfaces.

The measuring points for the combination of A and B are selected from that for A and B. When measuring A or B, an accessory, which has five measuring points, is need to measure the other side surface.

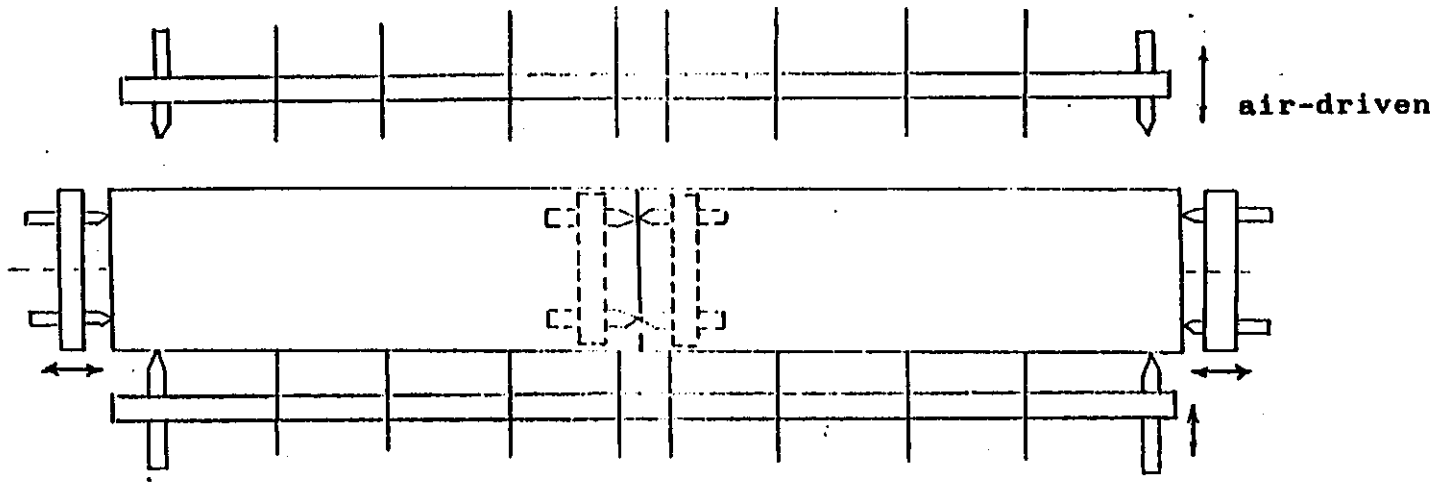

Schematic sketch of stage

Sensor: inductive gauging head,
measuring range:0-2mm
resolution: 0.3μm
Total sensor number: 84

The sensors on every one surface is moved together by air-driven device.

```
+------+ +---------+ +-----------+ +----------+
¦sensor+-+amplifier+-+demodulator+-+sam.& hold+-------+
+------+ +---------+ +-----------+ +----------+        ¦
                                                        ¦
                                                        ¦
                                                        ¦
+------+ +---------+ +-----------+ +----------+ +-----+------+
¦sensor+-+amplifier+-+demodulator+-+sam.& hold+-+multi-switch¦
+------+ +---------+ +-----------+ +----------+ +-----+------+
                                                        ¦
                                                        ¦
                                                     +--+--+
                                                     ¦ A/D ¦
                                                     +--+--+
                                                        ¦
                                                   +----+----+
                                                   ¦interface¦
                                                   +----+----+
                                                        ¦
                                                        ¦
                                                    +---+----+
                                                    ¦computer¦
                                                    +---+----+
                                                        ¦
                                                        ¦
                                                        ¦
                                                    +---+---+
                                                    ¦ output¦
                                                    ¦printer¦
                                                    +-------+
```

The diagram of
signal processing electronics

Date: Aug. 25, 1992

The Proposal of Alignment for the GEM Detector

Li Dacheng, Liang Jinweng
Yu Guanzheng

Dept. of Precision Instruments
Tsinghua-GEM Collaboration
Tsinghua University, Beijing, China
Fax: (861)-2568116

1. About Straightness Monitor:

According to (GEM TN-92-120), its accuracy is 10 μm, measuring range 100 μm, measuring distance 10 m.

This 3-point monitor uses principle of optical imaging. For a multipoint straightness alignment, it should be implemented by leapfrogging several sets. The practical accuracy is limited by off-focus and complex mechanical mounting components.

We suggest using LED alignment system researched by our department as an alternative(see ref.2). For this system, the accuracy is 10 μm/10 m, measuring range 15 m, the dynamic range of detector is 1 mm. With this system, the off-focus error may be avoided, and the mechanical mounting components could be simpler than before.

The straightness monitor can ensure straightness among the relative points of layers, but cannot ensure alignment between layers and IP.(Fig.1)

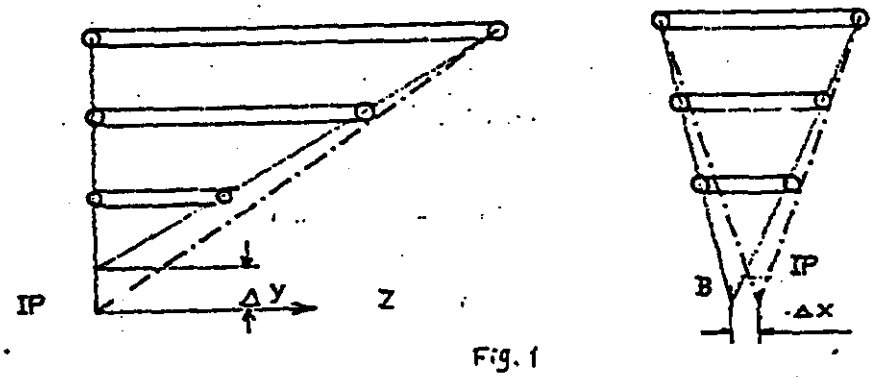

Fig. 1

2. Laser Alignment:

The failure of straightness monitor for alignment(between layers and IP) could be avoided by Laser Alignment. The accuracy of 5 μrad could be satisfied by using a Laser Scanning Aligner researched by our Department.

Laser Scanning Aligner: Laser beam can be rotated around X and Z, the rotating angle can be read out precisely (Fig.2). Using a special optical system, a high accuracy of alignment in bending direction will be obtained.

For a multipoint alignment demand, systemic error due to detector refraction can be compensated. This method has been adopted in a 30 meters hole-hole multipoint alignment system developed by our Department, its accuracy reached 15 μm/5 m.

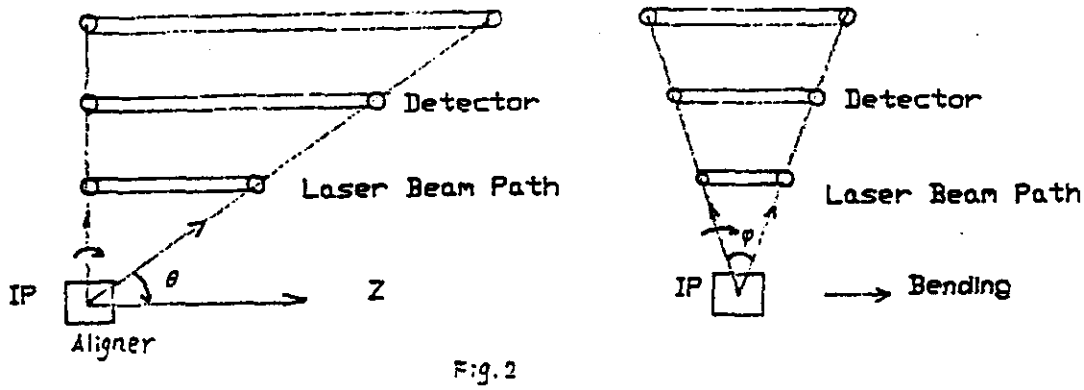

Fig.2

Laser alignment does not measure S_x, S_y, S_z (fig.3). Solving this problem, parallel between layers should be ensured first. An instrument for parallelism-perpendicularity measuring researched by our Department can be used to reach this goal. It also can serve for alignment in a layer of chamber.(see ref.3)

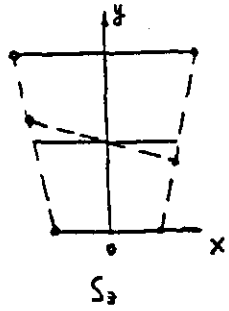

Fig.3

3. Approaches for MUON system setting:

OPTION 1: Separating the lattice into 16 hexant blocks, precisely set for every block then assemble them into a barrel and an endcap with laser alignment. Since a special apparatus can be designed for a block setting at first, the high accuracy of alignment between layers and in a layer can be achieved, so that it will be simple for the global alignment. But setting for global may be difficult when a hexant block of lattice is deformed in the processing of setting.

OPTION 2: Constructing the lattice as a barrel and an endcap at first, fixing, measuring and aligning chamber layers in them.

This approach is convenient for global setting, but much complex for alignment and measurement. To satisfy local and global alignment requirement, straightness monitor(for local alignment), laser alignment(for global alignment) and an instrument of parallelism-perpendicularity measurement(for parallelism between layers) should be used sequentially.

A light source(laser for example) should be set at IP for both of approaches, 5 μrad of rotor accuracy can be achieved if the technique and instruments of our Department are adopted.

BACKGROUND

PRECISION INSTRUMENTS DEPARTMENT, TSINGHUA UNIVERSITY.

The Large scale dimension measurements have been researched for ten years. in our department. In the period We accepted financial support of 1 million USD from UNDP and achieved many successful results. The major achievements are as follows:

1) CCD laser alignment technique.
2) Optical alignment system based on optical activity.
3) LED optical alignment system.
4) The instrument for measuring parallelism and perpendicularity in large dimension.
5) Quartz crystal tuned He-Ne dual frequency laser for long distance measurement.
6) Equipment for measuring coaxiality of holes at long distance apart (30M).
7) Equipment for measuring the flatness of joint surface of turbine machine.
8) Roundness and cylindricity in-situ measuring system for large shafts.
9) In-situ equipment for measuring flatness of large mirror plates.
10) Technique of absolute distance inteferometry with 3.39μ dual wavelength He-Ne laser.
11) Research in infrared digital inferferometric system for measuring flatness of large plane.

Most of them have been applied to industry. Item 1) - 4) included will be very helpful for alignmet in SSC.

Two–dimensional Automatic Straightness Measurement System Based on Optical Activity

Our research group has been involved with an alignment technique based on optica activity since 1983. Within six years the important technique problems (portabl Faraday rotator and driver, signal processing, automatic readout method and circuits were solved . Our prototype instrument is easy to operate , can be applied t uncontinuous measurement, and can be used in industrial environment. Its accuracy i equivalent to a dual-frequency interferometer, but the adjustment is much easier.

The optical system is shown in Fig. A Glan-Taylor prism with two outputs serve as the polarizer, causing the laser beam to split into two beams with an extinctio ratio of 10^6. A modulating and compensating Faraday cell was placed in optical path Modulation was driven by a sine wave generator and amplifier in series resonance. Th position-sensitive device (No. 7) consists of three pairs of left-handed and right-handed quartz wedges. The pair in the middle is for x-direction measurement. Two pair of sidepieces are for the y-direction function. The light vibrations are rotated b different amounts according to the portion of the wedge through which they passed. Laser beams go through a 1/4 waveplate and cat-eye system and then come back i parallel through the wedge again. The sensitivity is enhanced twice. When the wedg has a lateral displacement of S, the orientation of polarization should be rotate by an angle:

$$\Phi = 4A\tan\delta S$$

where A is the activity coefficient of quartz at about 18° /mm and δ is wedge angl at 1° of arc. Analyzers (Nos. 12 and 14) are placed orthogonally with a polarizer

Measuring range : 30 m **Resolution : 1 μm** **Accuracy : 30 μm/30m**

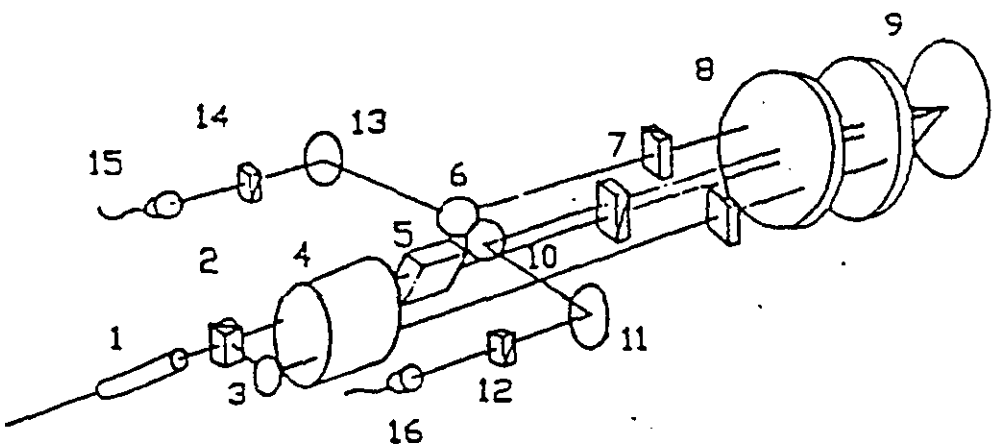

Fig . Optical System

1. beam expander 2. polarizer 3. 6. 10. 11. 13. mirrors 4. Faraday cell 5. prism 7. quartz wedges 8. 1/4 waveplate 9. cat-eye 12. 14. analyzers 15. 16. photodetector

LED Optical Alignment System

Working Principle:

Two light emitting diods are respectively drived with two square wave signals with phase difference 180 degrees and emit light beam alternatively. After reflection on a prism surface, the beams from the two LEDs become two parts symmetrical about the prism and are emited through the collimating lens. The receiver consists of the receiving lens and the photoelectric cell. When axes of the receiving lens and the emitting lens (collimating lens) become coincident. light intensity of two beams from two LEDs is same on the receiver, $I_1=I_2$, as b in the diagrame. The instrument become aligned. When the receiving lens is up, $I_1>I_2$ (Fig. a) and down $I_1<I_2$ (Fig. c), alignment deviation is measured by comparing I_1 and I_2.

Accuracy: 10 μm/10m

Resolution : 2 μm

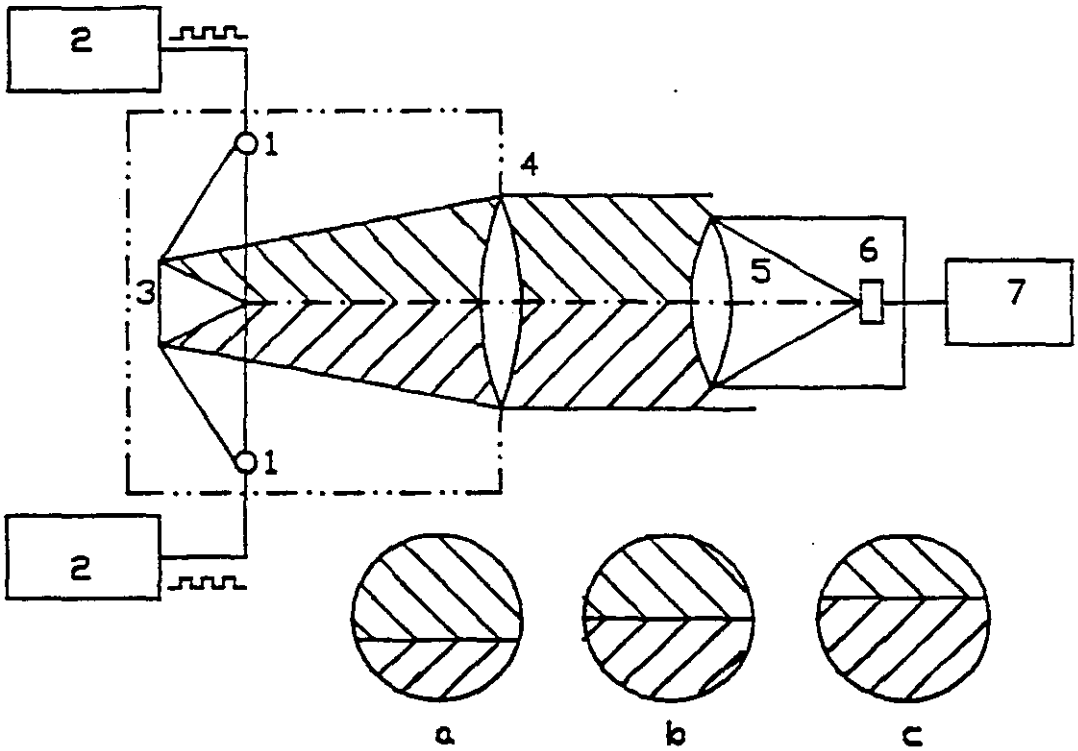

Configuration:

Emit Unit : 1. Light Emitting Diodes LED1 and LED2 2. LEDs' Square Wave Drivers 3. Prism 4. Collimating Lens

Receiving Unit : 5. Receiving Lens 6. Photoelectric Cell 7. Signal Demodulator

An Instrument for Measuring Parallelism and Perpendicularity in Large Dimension

A. This instrument is suitable to measuring parallelism and perpendicularity of some surfaces of large workpieces or during assembling large machines and equipment. Measurement range is ten to twenty meters. Measurement accuracy is better than 4×10^{-6} L, here L is measurement distance. Measurement range of the detector is ten millimeters. Detector resolution is one microns.

B. Measurement Principle and Configuration
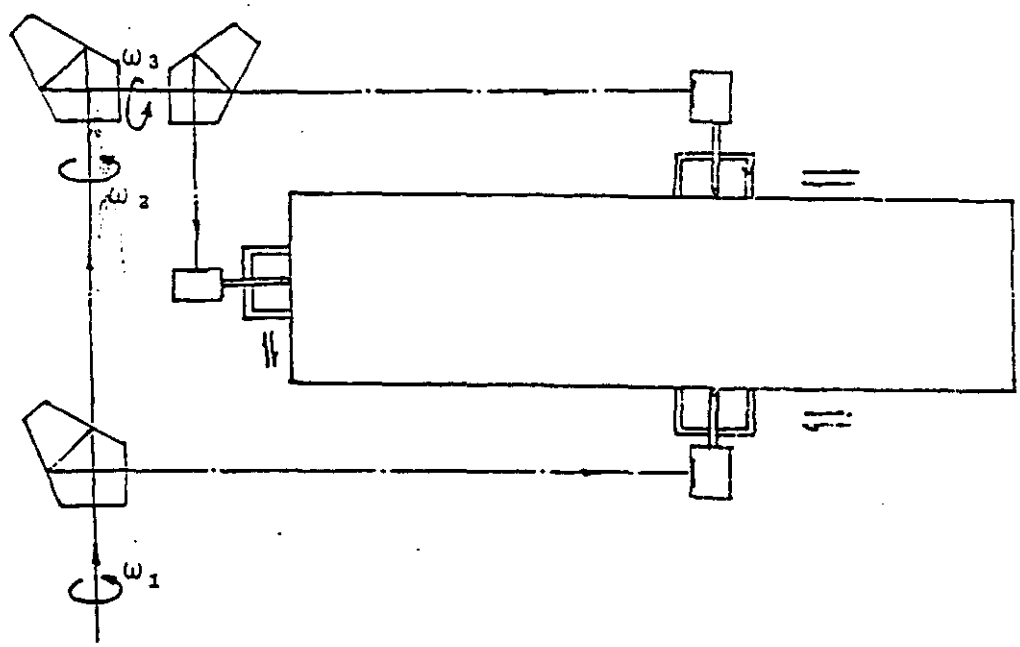
A stable alignment laser beam is employed as a measurement datum line. The datum planes parallel or perpendicular to each other are established by turning a pentagonal prism. Comparing surfaces under test with the datum planes, flatness, parallelism and perpendicularity between surfaces are measured. Height deviation between every measuring point and corresponding point on the datum plane is directly measured with a CCD probe and processed by PC computer. Measurement data processing is simple and the instrument is easy to operate. The system is not only suitable to measuring large workpieces, but also to assembling and positioning large machines, ships and buildings.