GEM TN-92-165
Draft

GEM Detector: Noble Liquid Hybrid EM Calorimeter Design Study

D. Bailes, S. M. Chae, C. E. Claffey, D. J. Kincaid,
M. J. Rennich, A. Smirnov, and D. S. Webb
Oak Ridge National Laboratory

August 31, 1992

Abstract:

This document describes a proposed design for a GEM hybrid calorimeter. The fiber hadron portion of the calorimeter is detailed in a companion document entitled "Fiber Hadron Calorimeter Design and Costing Update, August 31, 1992". Consequently, this report focuses only on the noble liquid EM calorimeter. However, the parameters for the hybrid fiber configuration are included.

DRAFT ONE

DRAFT ONE

GEM Detector

Noble Liquid Hybrid EM Calorimeter

Design Study

August 31, 1992

Oak Ridge National Laboratory

Introduction

This document describes a proposed design for a GEM hybrid calorimeter. The fiber hadron portion of the calorimeter is detailed in a companion document entitled "Fiber Hadron Calorimeter Design and Costing Up-Date, August 31, 1992". Consequently, this report focuses only on the noble liquid EM calorimeter. However, the parameters for the hybrid fiber configuration are included.

Much of the engineering included in this report is different than that previously presented; however, the earlier designs served as an advanced starting point. Thus, the earlier work, particularly of Martin Marietta Denver made this effort possible.

This report is organized to focus on specific aspects of the noble liquid calorimeter design. These design issues are listed below by section number and not necessarily in order of importance. In addition, an initial listing of requirements and specifications has been included to summarize some of the parameters for the EM calorimeter.

ORNL and ITEP Engineers and Designers working on this study are:

MJ Rennich
SM Chae
A. Smirnov
DJ Kincaid
D. Bailes
CE Claffey
DS Webb

Summary

The proposed noble liquid EM calorimeter has been studied for inclusion in a hybrid GEM configuration with a fiber hadron calorimeter. The arrangement for the EM calorimeter is based on the concept developed by Brookhaven and Martin Marietta Denver; however, modifications were made to the design as required to optimize it for the hybrid arrangement.

Five important points can be made based on this study:

1. A hybrid calorimeter is feasible for use in the GEM detector, however, compromises may be required as described below.

2. There may be more than 1 X_0 of material in front of the active EM region in the barrel and end caps. The ASME Code evaluation of the vessel walls combined with a material stack-up analysis indicates a total thickness of approximately 1.6 to 3 X_0 if the current baseline design is used. The inclusion of liquid krypton excluders and other special features will reduce the material significantly. Using conventional pressure vessel construction techniques, the least amount of material is thought to be approximately 0.9 X_0.

3. The accordion structure, much like the BaF2 system, will rely on careful handwork to produce the highly accurate fit-up needed for a precision EM calorimeter. A component count indicates a conservative total of 80,000 pieces will be required for the accordion assemblies. The precise assembly of this many pieces will rely on a combination of special tolerancing and extensive in-process manual adjustment.

4. The interaction depth of the hadron calorimeter may be reduced to approximately eleven Lambda over the range 3° in theta and 20° in phi without the addition of special absorber. A detailed IGRIP geometric modeling study will be required to fully understand the loss of absorber.

5. The parallel plate EM arrangement is likely to be easier to mechanically assemble than the accordion because there are not as many additive tolerances. A reliable method of soldering the stripline joints will have to be developed.

Index

Summary

Index

I. Introduction

II. Listing of Outstanding Design Issues

III. Requirements and Specifications

IV. Design Issues

1.0 Cryostat Utilities Routing Through the Fiber Hadron Calorimeter
2.0 Feedthrough Density on EM Vessels
3.0 Vessel Design
4.0 Support of EM Barrel
5.0 Installation of EM System
6.0 Local Vacuum Pumping of the EM system
7.0 EM Calorimeter Maintenance
8.0 Barrel EM Accordion Module Assembly
9.0 Barrel Accordion Plate Shape
10.0 Vessel Assembly
11.0 Beam Testing
12.0 End Cap Accordion Structure
13.0 Cold Mass Supports
14.0 Radiation and Absorption Lengths of EM Calorimeter
15.0 Radiation and Absorption Lengths of Accordion
16.0 Determination of Liquid Volumes
17.0 Determination of Vessel Weights
18.0 Determination of System Weights
19.0 Barrel Assembly Procedure
20.0 End Cap Assembly Procedure
21.0 Accordion Component Count

V. Alternative Hybrid Calorimeter Configurations

V.1 Parallel Plate Noble Liquid EM Calorimeter

V.2 Skewed Accordion Barrel Plates

VI. Fiber Hadron Parameters

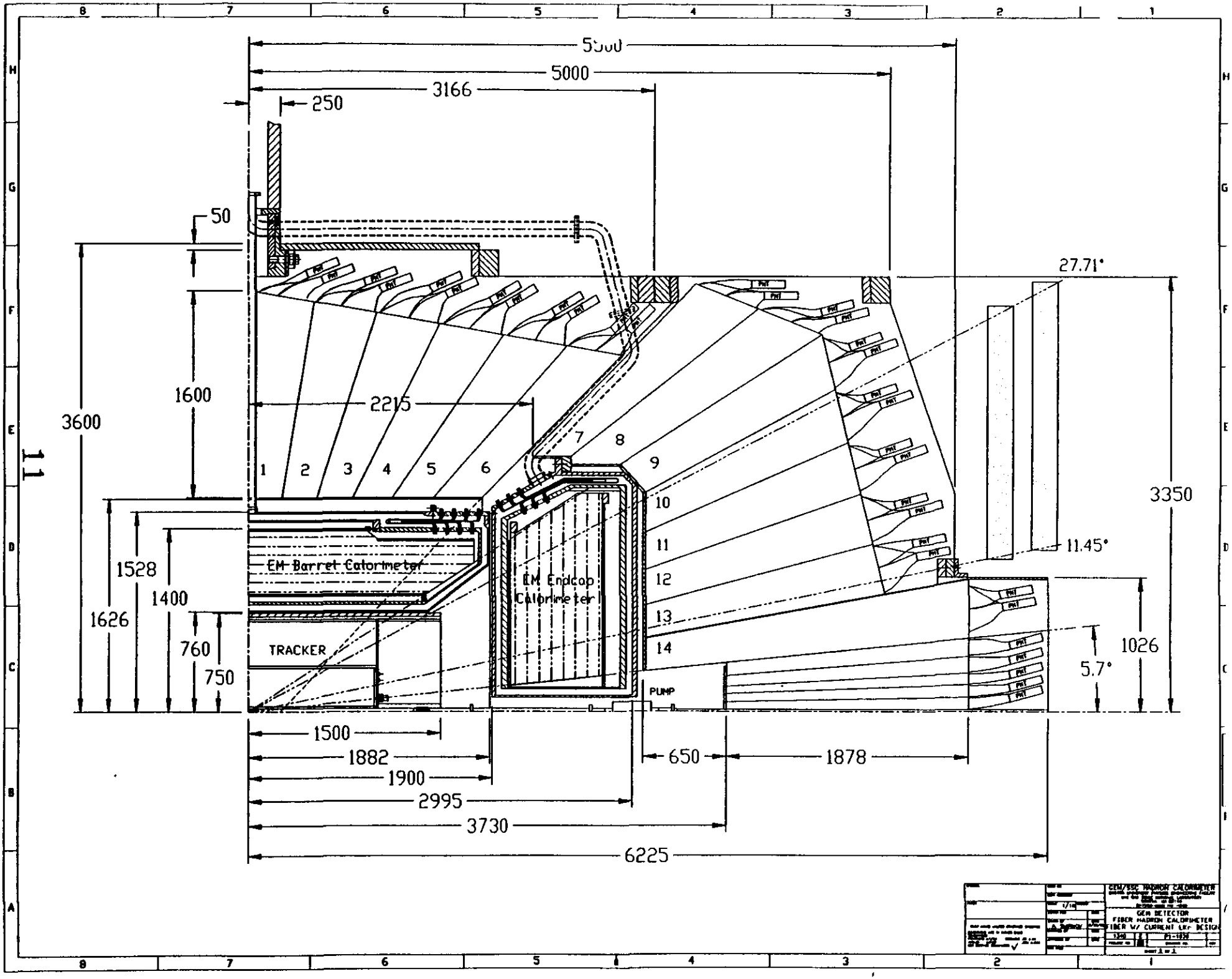
5500
5000
3166
250
50
3600
1600
2215
27.71°
3350
11.45°
1026
5.7°
1528
1400
1626
760
750
1
2
3
4
5
6
7
8
9
10
11
12
13
14
EM Barrel Calorimeter
EM Endcap Calorimeter
TRACKER
PUMP
PMT
1500
1882
1900
2995
3730
6225
650
1878
GEM/SSC HADRON CALORIMETER
GEM DETECTOR
FIBER HADRON CALORIMETER
FIBER W/ CURRENT LAY DESIGN

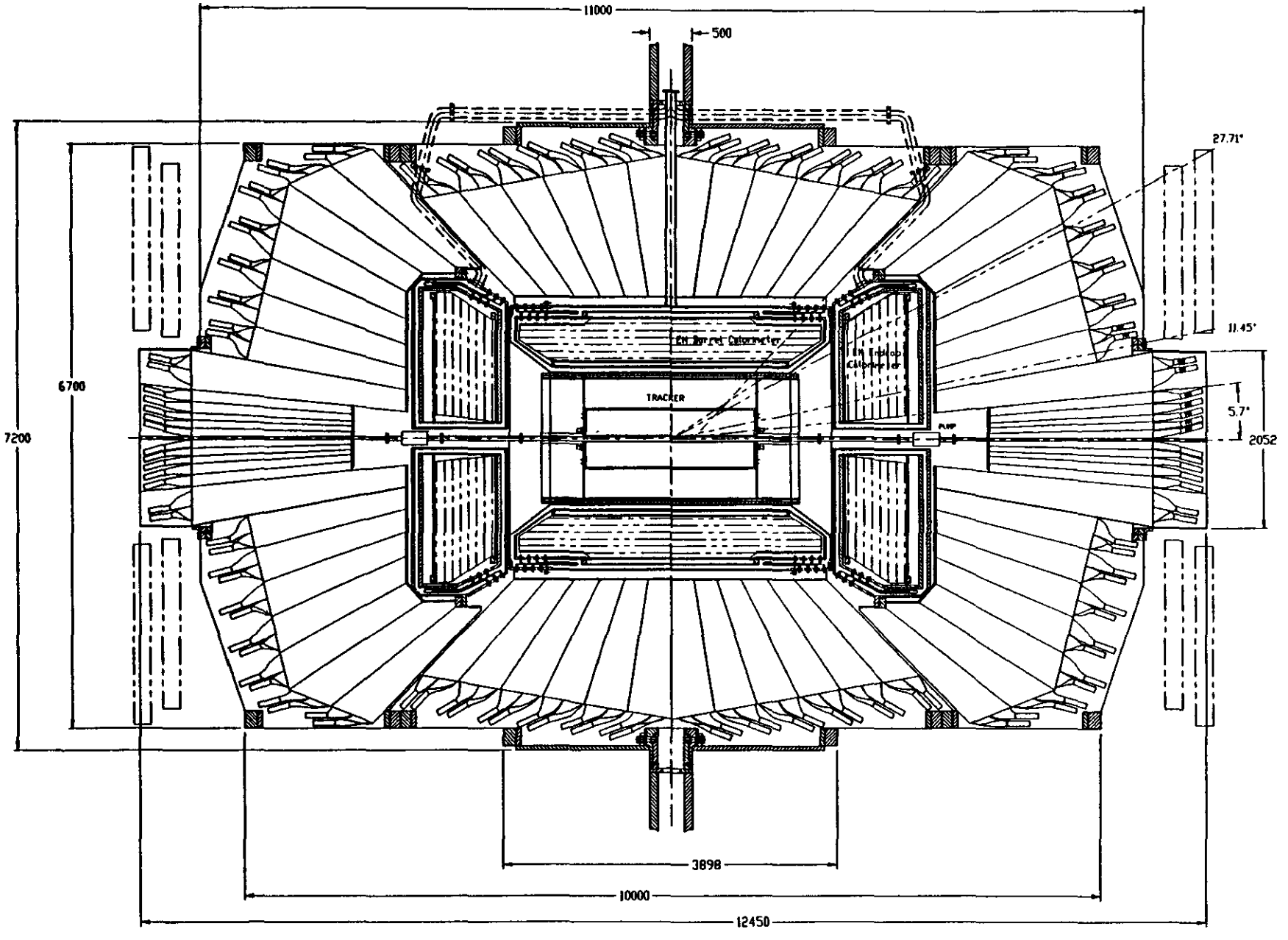

GEM/SSC HADRON CALORIMETER

GEM DETECTOR
FIBER HADRON CALORIMETER
FIBER W/ CURRENT LKr DESIGN

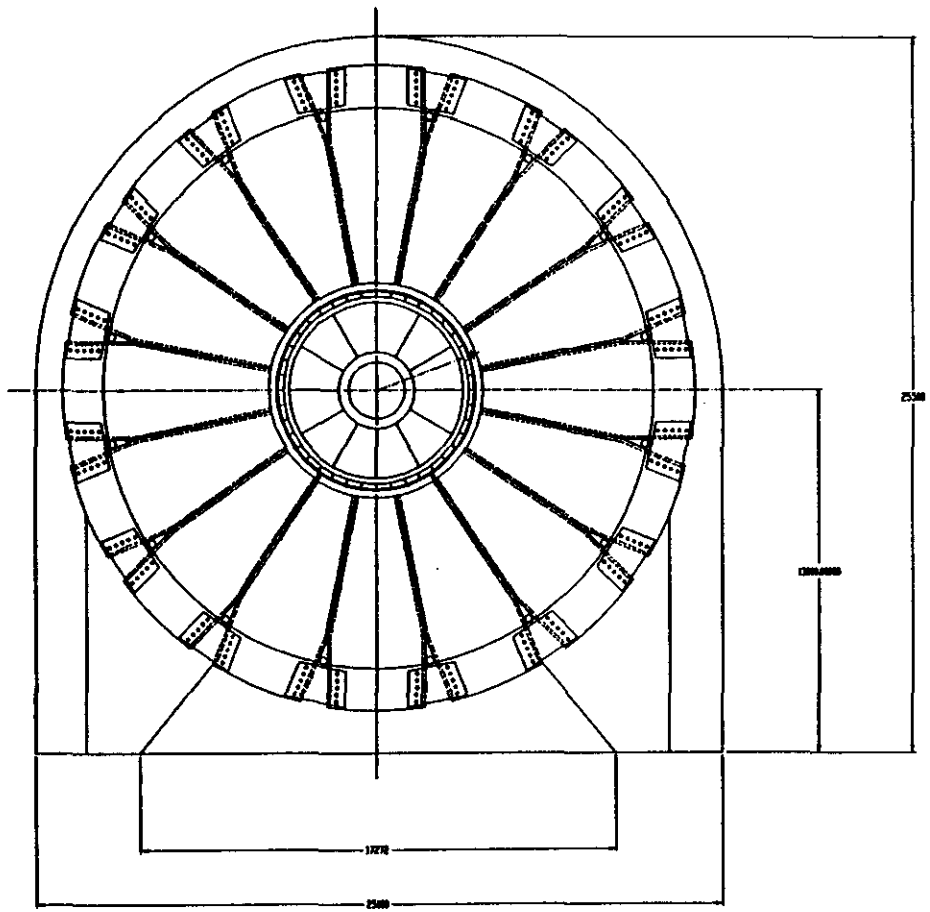

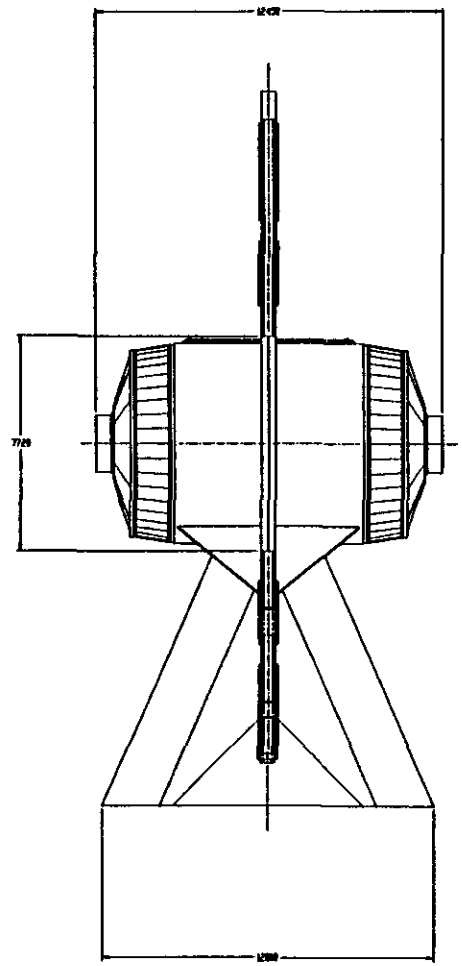

13

DO NOT REVISE MANUALLY

NORTH MINETTA CHERRY EVERGLADE

ELK DETECTOR
HORN CALIBRATOR

SCALE 1/64

II. Listing of Outstanding Design Issues

The following issues need to be resolved to better understand the basic configuration of the noble liquid EM caloirmeter.

II.1 Local Vacuum Pumping Requirements;

The current design does not have space for local vacuum pumping. This combined with the small diameter and long length of the vacuum pumping line may be a potential operating problem.

II.2 LKr Accordion Configuration/Optimization;

The current accordion arrangement is optimized for Liquid Argon. The accordion configuration may need to be redesigned for Liquid Krypton.

II.3 Analysis and Minimization of Material in front of active EM;

There appears to be too much material in front of the barrel EM in the current design. A detailed design will be required to reduce the material.

II.4 Parallel Plate solder joint reliability;

The parallel plate alternative is very close to the accordion in size and assembly. It will be possible to carry the parallel plate design as an option to the hybrid design for several months while the internal design, particularly the reliability of the solder joints is analyzed.

II.5 End Cap Accordion Plate Fabrication;

The fabrication of the individual end cap accordion plates will require additional study. Many different sizes and shapes are required. Even though the basic end cap accordion shape is constant, the individual plates will require attachment tabs at different locations. The inclusion of the tabs in the plate forming process is not understood.

III Requirements and Specifications

Criteria	Requirements	Specification
1.00 Segmentation		
1.10 Lateral	0.032 X 0.032	0.032 X 0.032
1.20 Longitudinal	Two	Two
2.00 Radiation Depth		
2.10 At eta=0		
2.11 In Front of EM	>1 Xo	1.22 Xo
2.12 In EM	25 Xo	25.9 Xo
2.13 In Back of EM	1.5 - 2.0 Xo	1.72 Xo
2.20 At eta=1.2		
2.21 In Front of EM	>1 Xo	2.04 Xo
2.22 In EM	25 Xo	25.9 Xo
2.23 In Back of EM	1.5 - 2.0 Xo	2.30 Xo
2.30 At eta=3.0		
2.31 In Front of EM	>1 Xo	2.07 Xo
2.32 In EM	28 Xo	28.0 Xo
2.33 In Back of EM	1.5 - 2.0 Xo	1.74 Xo
3.00 Absorber Composition		
3.10 Eta=0.0 to ?		
3.11 Stainless Steel	0.2 mm	0.2 mm
3.12 PrePreg Composite	0.1 mm	0.1 mm
3.13 Lead	1.3 mm	1.3 mm
3.14 PrePreg Composite	0.1 mm	0.1 mm
3.15 Stainless Steel	0.2 mm	0.2 mm
3.20 Eta=? to 1.2		
3.21 Stainless Steel	0.2 mm	0.2 mm
3.22 PrePreg Composite	0.1 mm	0.1 mm
3.23 Lead	1.3 mm	1.3 mm
3.24 PrePreg Composite	0.1 mm	0.1 mm
3.25 Stainless Steel	0.2 mm	0.2 mm
3.30 Eta=1.2 to 3.0		
3.31 Stainless Steel	0.2 mm	0.2 mm
3.32 PrePreg Composite	0.1 mm	0.1 mm
3.33 Lead	1.3 mm	1.3 mm
3.34 PrePreg Composite	0.1 mm	0.1 mm
3.35 Stainless Steel	0.2 mm	0.2 mm

Criteria	Requirements	Specification
4.00 Readout Layer		
At all Eta		
Kapton/copper	0.4 mm	0.4 mm
5.00 Noble Gas Description		
5.10 Barrel		
5.11 Type	Krypton	Krypton
5.12 Pressure Range	+/- 2 psi	+/- 2 psi
5.13 Saturation Temp.	121 K	121 K
5.14 Operating Temp.	?	?
5.15 Purity	?	?
5.20 End Cap		
5.21 Type	Argon	Argon
5.22 Pressure Range	+/- 2 psi	+/- 2 psi
5.23 Saturation Temp.	87.2 K	87.2 K
5.24 Operating Temp.	77 K	77 K
5.25 Purity	?	?
6.00 Coverage		
6.10 Eta	0.0 to 3.0	
6.11 Barrel		0.0 to 1.16
6.12 End Cap		1.32 to 3.0
6.13 Forward		3.0 to 5.5
7.00 Readout		
7.10 Electronics	JFET Preamp	JFET Preamp
7.20 Power	75 mw/Channel	75 mw/Channel
7.30 Cabling	22 Ga TP	22 Ga TP
8.00 Alignment		
8.10 Barrel		
8.11 x-y	+/-1 mm	+/-5 mm
8.12 z	+/-1 mm	+/-5 mm
8.20 End Cap		
8.21 x-y	+/-1 mm	+/-5 mm
8.22 z	+/-1 mm	+/-5 mm

Criteria	Requirements	Specification
9.00 Vessel Design		
9.10 ASME Code		
9.20 Vacuum Vessel		
9.21 Operating Press.	- 15 psi	- 15 psi
9.22 Excursion Press.	0	0
9.30 Gas Vessels		
9.31 Operating Press.	+20 psi	+20 psi
9.32 Excursion Press.	-15 to + 30 psi	-15 to + 30 psi
9.40 Material	Low z	Aluminum 5083
9.50 Welds	100% X-Ray	90+% X-Ray
9.60 Feedthrus		SLAC "Cold"
9.70 Cold Mass Supports		Para. Plt Array
10.00 Maintenance		
10.10 Rate	Annual	Annual
10.20 Access	In-Situ	In-Situ
11.00 Install. Sched.	4 Months	4 Months
12.00 Dimensions		
12.10 Electromagnetic Calorimeter		
12.11 Barrel ID	132 cm	132 cm
12.12 Barrel OD		306 cm
12.13 Barrel Length		376 cm
12.14 End Cap To IP	> 165 cm	190 cm
12.15 End Cap Diameter		360 cm
12.16 End Cap Length		110 cm
12.20 Hadron Calorimeter		
12.21 Barrel Inside Diameter		325 cm
12.22 Barrel Outside Diameter	720 cm Max	720 cm
12.23 Overall Lenght	1100 cm Max	1100 cm

Criteria	Requirements	Specification
13.00 Interaction Lenght		
13.10 Barrel	12 Lambda	
13.11 EM Assembly		1.85-2.26 Lambda
13.12 Hadron Assembly		10.0 Lambda
13.20 End Cap	14 Lambda	
13.21 EM Assembly		2.55 Lambda
13.22 Hadron Assembly		11.45+ Lambda
14.00 Weights (Mg)		
14.10 EM Calorimeter		
14.11 Barrel		46
14.12 End Cap		27
14.20 Hadron Calorimeter		
14.21 Barrel		895
14.22 End Cap		487
14.30 Forward Calorimeter		12
14.40 Total		1993
15.00 Vessel Liquid Volumes (Liters)		
15.10 Barrel		3,974
15.20 End Cap		5,145

Layers of the Accordion Absorber p te

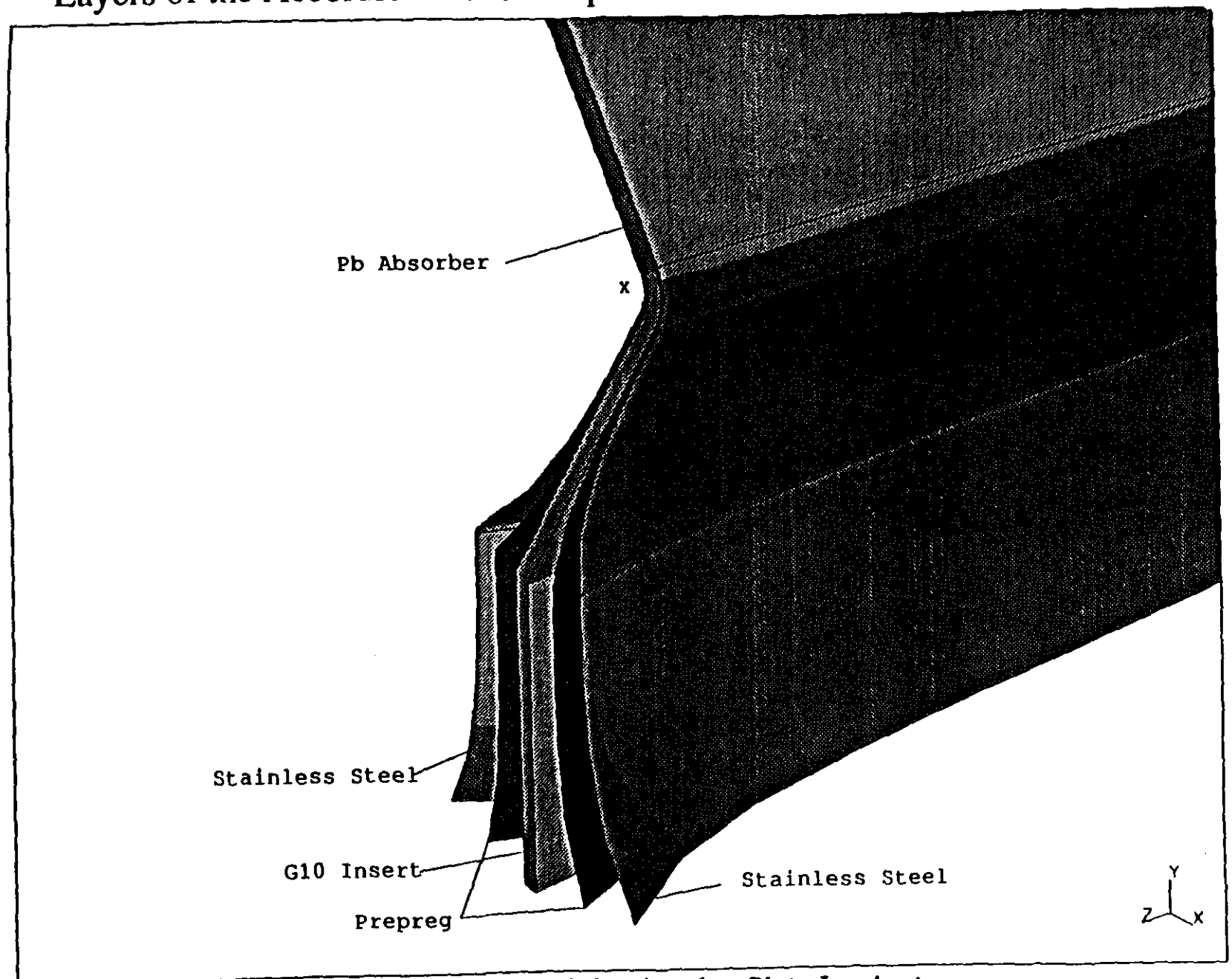

Figure 1-2a Barrel EM Module Absorber Plate Laminate

IV. Design Issues

1.0 Cryostat Utilities Routing Through the Fiber Hadron Calorimeter

Issue: Noble liquid calorimeters require substantial utilities access, particularly large lines which are not compatible with projective fiber calorimeters.

Comments:

1.1 A complete listing of utilities and cables required for the EM calorimeter is attached. The listing includes two large lines (vacuum and gas vent) which are difficult to route through a projective calorimeter without significantly reducing the performance of the calorimeter.

1.2 Figure P-0026 shows the locations of the large lines. The end cap pipes will be routed through the eta 1.2 gap in the hadron system and the barrel lines will be routed through the eta=0 position.

1.3 Figure P-0039 shows the end cap pipe routing designed to reduce the loss of absorber. Each pipe will be embedded in three towers. Thus six towers in each hadron end cap will have reduced performance.

1.4 Figure G.03.LM.019 shows the cross section of the pipe and the diverted fibers from the section of the hadron tower below. The diverted fibers will have to be installed and shielded very carefully prior to installation of the pipe.

1.5 The vacuum and vent pipes are assumed to be 4 inch schedule 40 (114 mm dia). Additional calculations are required to determine if these are the correct diameter.

1.6 Additional liquid service lines (LN2) will be required and may result in additional small gaps in the hadron system. A complete thermal model will be required to determine the size and number of lines required.

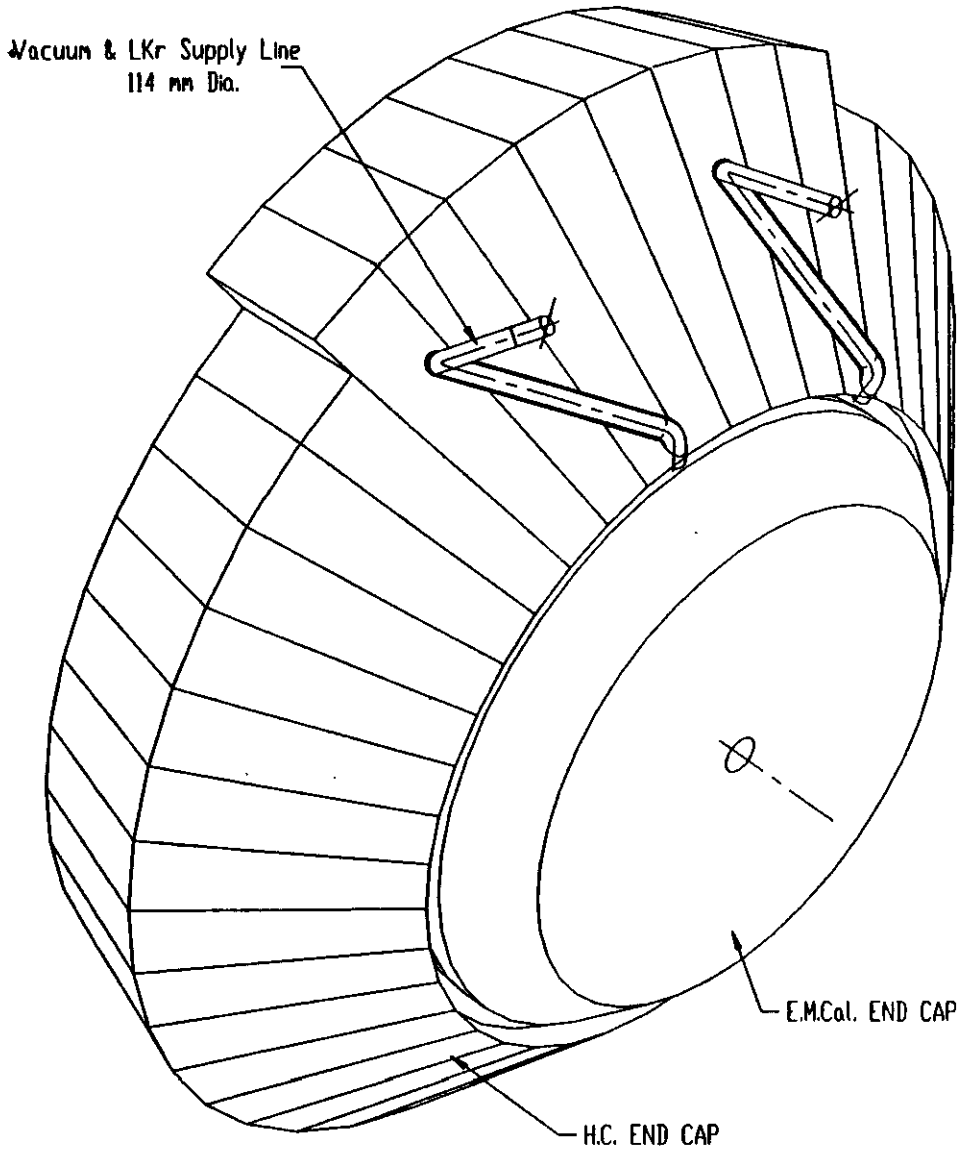

MATERIAL	USED ON	GEM/SSC HADRON CALORIMETER BOSTON UNIVERSITY PHYSICS ENGINEERING FACILITY and OAK RIDGE NATIONAL LABORATORY BOSTON, MA 02146 (617)353-8023; FAX -8025
	NEXT ASSEMBLY	
FINISH	SCALE 1/50 WEIGHT	
	DRAWN FOR / DATE	GEM DETECTOR FIBER HADRON CALORIMETER ENDCAP w/ VACUUM LINES
SHOP NOTES UNLESS OTHERWISE SPECIFIED DIMENSIONS ARE IN INCHES (mm) TOLERANCES FRACTIONS ± 1/64 DECIMALS .XX ± .01 ANGLES ± 0°30' .XXX ± .005 MIN SURFACE ROUGHNESS √	DRAWN BY A. SMIRNOV / DATE 8/26/92	1340 / E: / p1-1039 / 1
	CHECKED BY / DATE	PROJECT NO. / Dwg SIZE / DRAWING NO. / REV
	APPROVED BY / DATE	SHEET 1 OF 45
	CAD NAME	

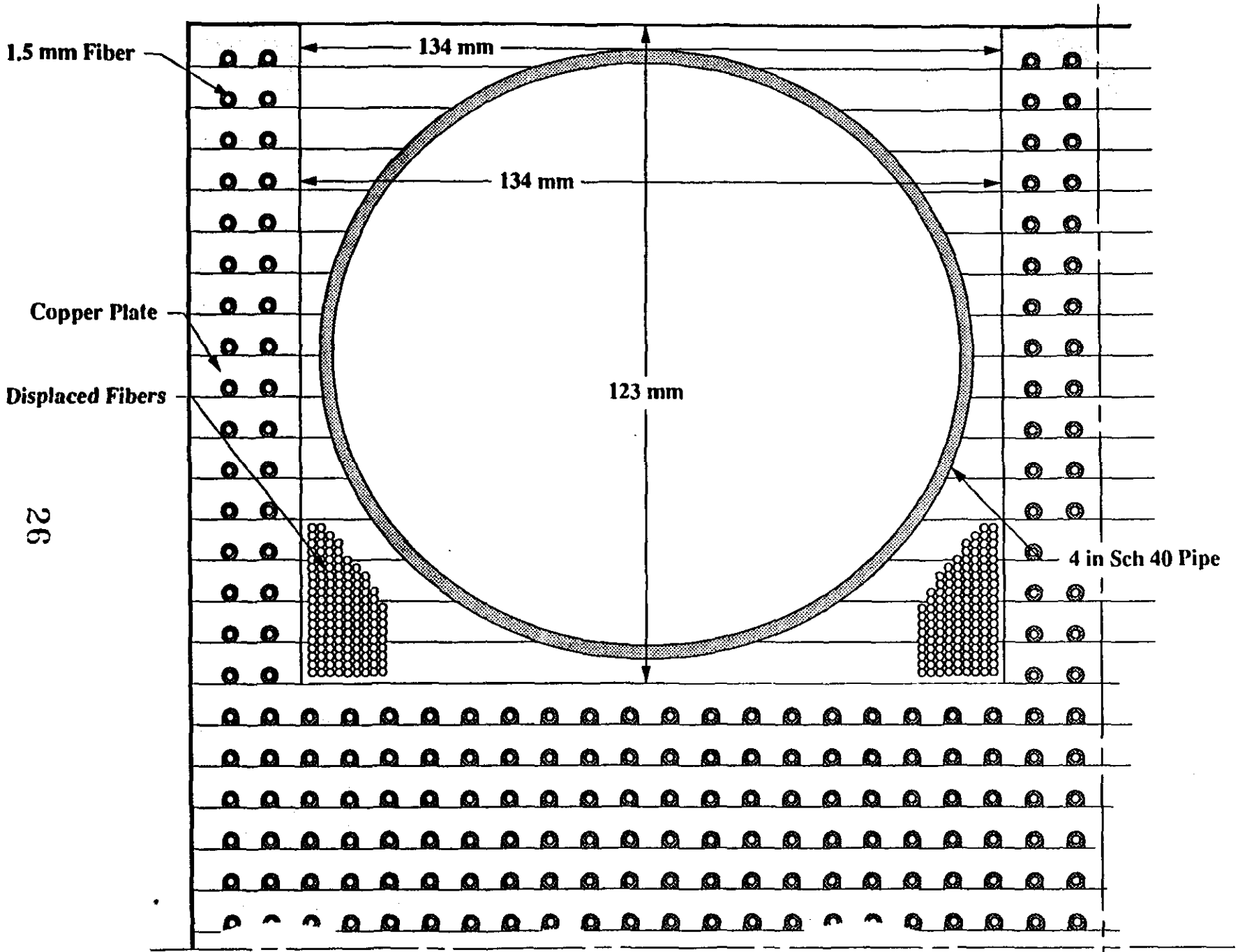

G.03.LM.019

Liquid Argon EM Vacuum Line
Feedthru Fiber Hadron

ORNL
August 21, 1992

2.0 Feedthrough Density on EM Vessels

Issue: Noble liquid EM calorimeters require more feedthroughs than can be reasonably accommodated on the cryo vessels.

Comments:

2.1 A complete listing of the number of feedthroughs for the GEM EM calorimeter is attached.

2.2 Figure P1-0026 shows a proposed barrel feedthrough arrangement in which the feedthroughs are mounted on a ring flange rather than the less efficient flat flanges. The ring flange joint is assumed to be seal welded. The ring flanges will require less than 20% of the welding needed for the individual flat flanges.

2.3 Figure P1-0026 shows a proposed end cap feedthrough arrangement in which the feedthroughs are mounted on a ring flange which is welded shut.

GEM Detector
Liquid Argon EM Calorimeter

Barrel Services

		Cabling					Piping			Parameters			
	Units Each	VOLT VOLTS	POWER WATTS	TYPE MIL SPC	AREA CM**2	WEIGHT KG/M	Type	AREA CM**2	WEIGHT KG/M	NUMBER UNITS	WG/METER KG/M	AREA CM**2	POWER WATTS
1 High Voltage	20	3000	0.2	22 ga TP	0.02	0.005				20	0.10	0.40	4
2 PreAmp Power	3600	6	0.075	22 ga TP	0.02	0.005				3,600	18.00	72.00	270
3 Readout	36000		0.3	22 ga TP	0.02	0.002				36,000	72.00	720.00	10,800
4 Calibration	3534		0.3	22 ga TP	0.02	0.002				3,534	7.07	70.68	1,060
5 Heater Power	4	220	3300	22 ga TP	0.02	0.005				4	0.02	0.08	13,200
6 Thermocouples	50	0		22 ga TP	0.03	0.007				50	0.35	1.50	0
7 Level Sensors	100	0		22 ga TP	0.03	0.007				100	0.70	3.00	0
8 Argon Feed Lines	1						1 X 2.5	41.85	2.52	1	2.52	41.85	0
9 Argon Vent Lines	1						1 X 2.5	41.85	2.52	1	2.52	41.85	0
10 Nitrogen Feed Lines	2						1 X 2.5	41.85	2.52	2	5.03	83.71	0
11 Nitrogen Disch. Line	2						1 X 2.5	41.85	2.52	2	5.03	83.71	0
12 Vacuum Lines	1						3 X 5	156.81	12.65	1	12.65	156.81	0
13 Pressure Relief	1						3 X 5	156.81	12.65	1	12.65	156.81	0
TOTAL										43,316	138.64	1432.40	25,334

Computation of Cable Area Requirements in Gap Between EM and Hadron Barrels:

Inner Radius of Fiber Hadron Barrel	163	cm
Outer Radius of LKr Barrel	157	cm
Annular Area/End	5524	cm^2
Nom. Area Required/End	434	cm^2
Clearance Area/End	5090	cm^2
Clearance Gap/End	5	cm

End Cap Services

	Units Each	VOLT VOLTS	POWER WATTS	TYPE MIL SPC	WIRE AREA CM**2	WEIGHT KG/M	Type	TUBING AREA CM**2	WEIGHT KG/M	NUMBER UNITS	WG/METER KG/M	AREA CM**2	POWER WATTS
1 High Voltage	20	3000	0.2	22 ga TP	0.02	0.005				20	0.10	0.40	4
2 PreAmp Power	1200	6	0.075	22 ga TP	0.02	0.005				1,200	6.00	24.00	90
3 Readout	13300		0.3	22 ga TP	0.02	0.002				13,300	26.60	266.00	3,990
4 Calibration	1330		0.3	22 ga TP	0.02	0.002				1,330	2.66	26.60	399
5 Heater Power	4	220	3300	22 ga TP	0.02	0.005				4	0.02	0.08	13,200
6 Thermocouples	50	0		22 ga TP	0.03	0.007				50	0.35	1.50	0
7 Level Sensors	100	0		22 ga TP	0.03	0.007				100	0.70	3.00	0
8 Argon Feed Lines	1						1 X 2.5	41.85	2.52	1	2.52	41.85	0
9 Argon Vent Lines	1						1 X 2.5	41.85	2.52	1	2.52	41.85	0
10 Nitrogen Feed Lines	2						1 X 2.5	41.85	2.52	2	5.03	83.71	0
11 Nitrogen Disch. Line	2						1 X 2.5	41.85	2.52	2	5.03	83.71	0
12 Vacuum Lines	1						3 X 5	156.81	12.65	1	12.65	156.81	0
13 Pressure Relief	4						3 X 5	156.81	12.65	4	50.61	627.24	0
TOTAL										16,015	114.79	1356.75	17,683

Computation of Cable Area Requirements in Gap Between EM and Hadron End Caps:

Inner Radius of Fiber Hadron End Cap	202	cm
Outer Radius of LKr End Cap	190	cm
Annular Area	14326	cm^2
Nom. Area Required	322	cm^2
Clearance Area	14004	cm^2
Clearance Gap	11	cm

Computation of Cable Area Requirements in Gap Between Hadron Barrel and End Cap:

Inner Radius of Fiber Hadron Barrel	178	cm
Outer Radius of LKr Barrel	175	cm
Annular Area/End	3299	cm^2
Nom. Area Required/End	755	cm^2
Clearance Area/End	2543	cm^2
Clearance Gap/End	2	cm

Tabulation of Feedthrus

Barrel	Total Number	Num Per Line	Total Lines	Lines Per Conn	Total Connect	Conn. per Feedthru	Total Feethrus
22 Ga TP							
Readout	36000	25	1440	4	360	1	360
Calibration	3534	25	141	10	14	1	14
High Voltage	20	10	2	1	2	1	2
PreAmp Power	3000	25	120	5	24	1	24
Heater Power	4	10	0	1	0	1	0
Thermocouples	50	25	2	10	0	1	0
Level Sensors	100	25	4	10	0	1	0
Argon Feed	1	1	1	1	1	1	1
Argon Discharge	1	1	1	1	1	1	1
N2 Feed	2	1	2	1	2	1	2
N2 Discharge	2	1	2	1	2	1	2
Vacuum	1	1	1	1	1	1	1
Pressure Relief	1	1	1	1	1	1	1
Totals for Barrel	42716		1718		409		409

One End Cap	Total Number	Num Per Line	Total Lines	Lines Per Conn	Total Connect	Conn. per Feedthru	Total Feethrus
22 Ga TP							
Readout	13300	25	532	4	133	13	10
Calibration	1330	25	53	4	13	13	1
High Voltage	20	10	2	4	1	13	0
PreAmp Power	1330	25	53	4	13	13	1
Heater Power	4	10	0	4	0	13	0
Thermocouples	50	25	2	4	1	13	0
Level Sensors	100	25	4	4	1	13	0
Argon Feed	1	1	1	1	1	1	1
Argon Discharge	1	1	1	1	1	1	1
N2 Feed	2	1	2	1	2	1	2
N2 Discharge	2	1	2	1	2	1	2
Vacuum	1	1	1	1	1	1	1
Pressure Relief	4	1	4	1	4	1	4
Totals for End Cap	16,145		658		173		23

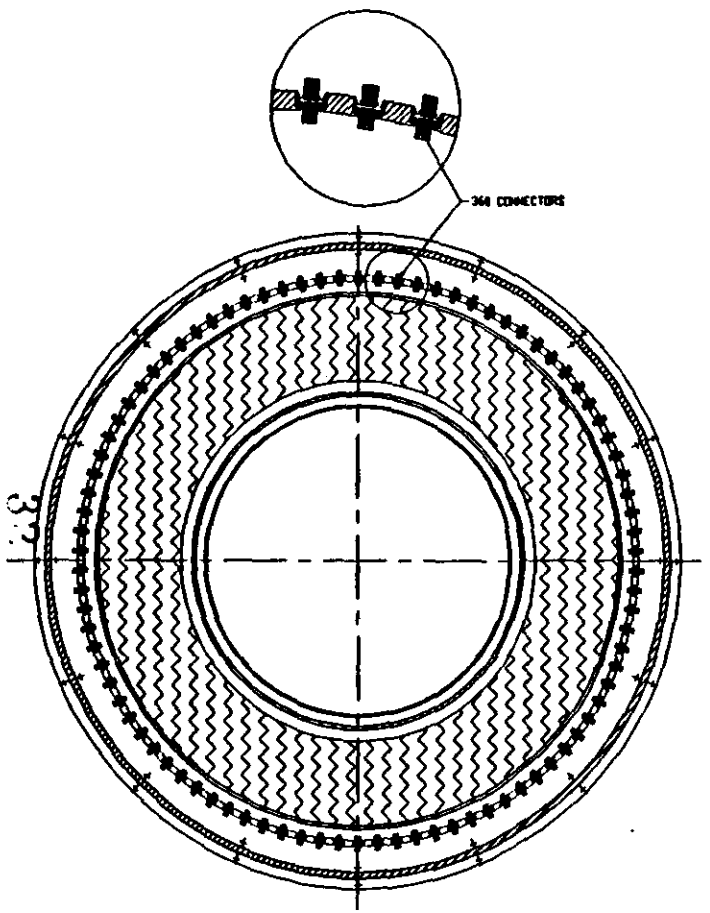

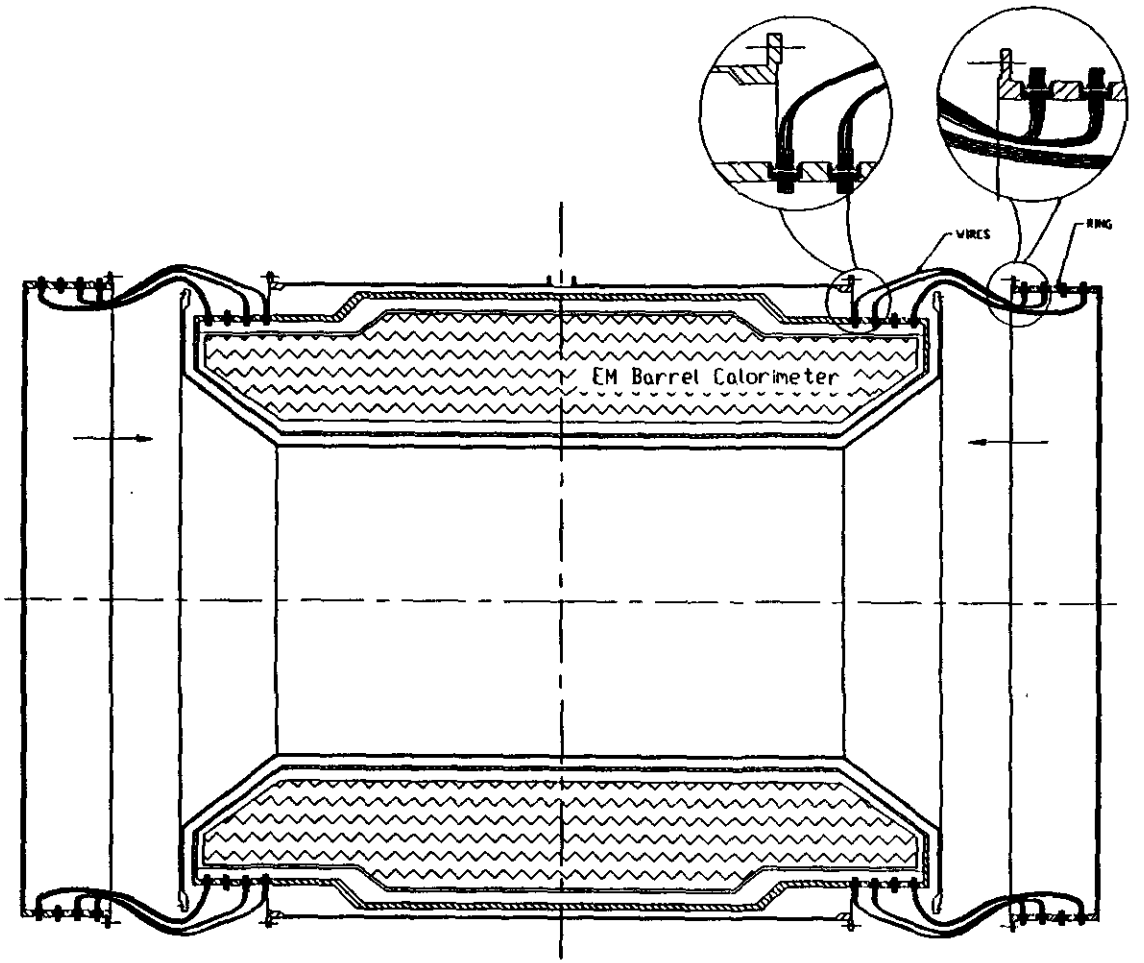

GEM/SSC HADRON CALORIMETER

GEM DETECTOR
L KF EM CALORIMETER

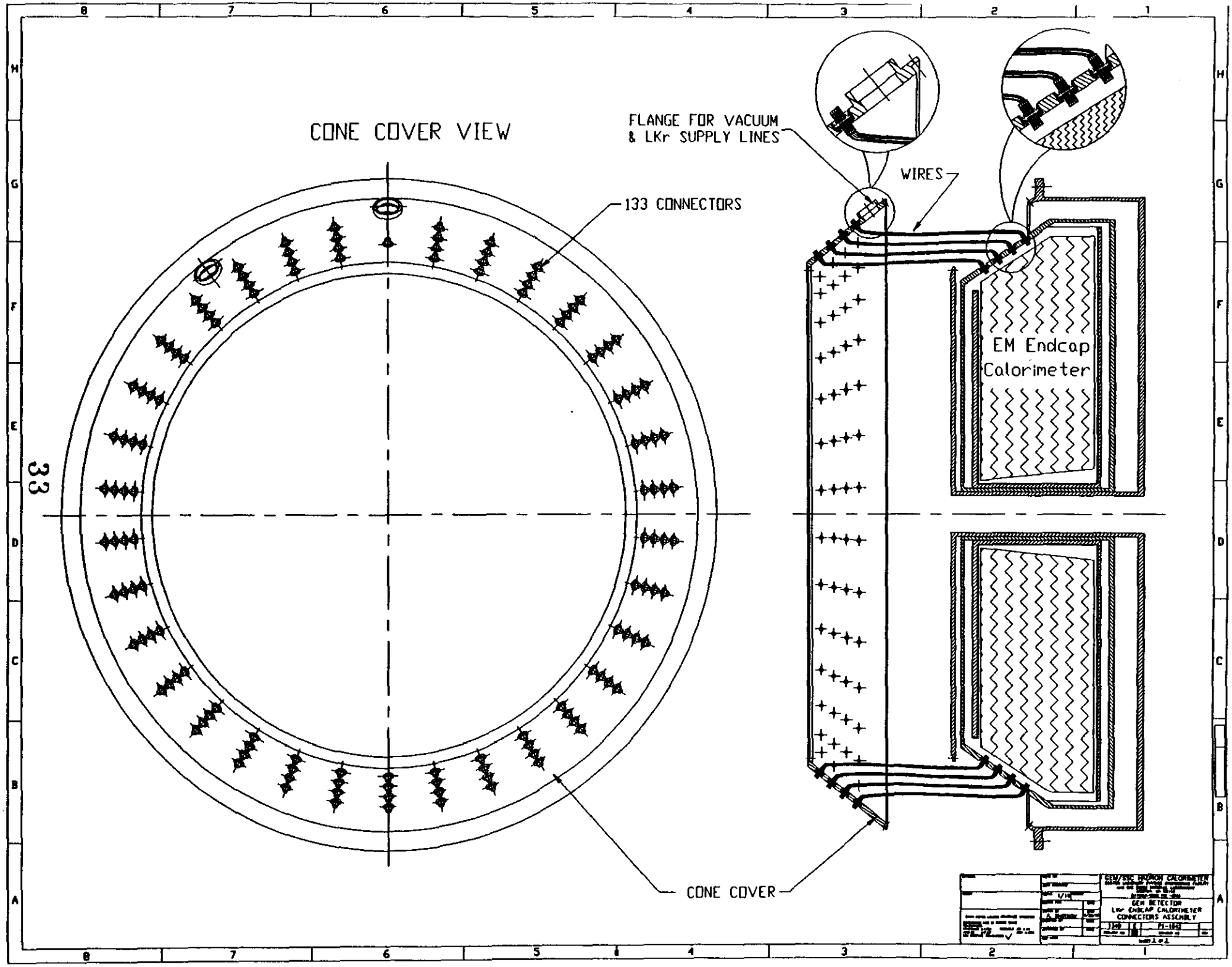
CONE COVER VIEW
133 CONNECTORS
CONE COVER
FLANGE FOR VACUUM
& LKr SUPPLY LINES
WIRES
EM Endcap
Calorimeter
GEM/SSC HADRON CALORIMETER
GEM DETECTOR
LKr ENDCAP CALORIMETER
CONNECTORS ASSEMBLY

3.0 Vessel Design

Issues:

a. The end cap vessels have large flat heads which cannot be reinforced across the EM accordion system.

b. Vessel walls should have minimum radiation thickness possible.

Comments:

3.1 The current barrel concept is shown in Figure P1-1026. The barrel serves dual functions. First, it contains the LKr and second provides structural support for the accordion plates. The vessel sizes are stress determined for containment and deflection determined for support.

3.2 The use of ribbed heads on the EM end caps was analyzed. It was found that the ribbing will only be effective if either the gap between the vessels is substantially increased (>10 cm) or the ribs are very large (> 3 cm wide). In the first case the EM calorimeter consumes too much space and in the second the amount of material in front of the active region becomes non-uniform.

3.3 ASME code calculations are attached for flat heads. The calculations are preliminary and apply primarily to the major walls. The conical sections will be calculated at a later date.

3.4 A preliminary finite element analysis of the LKr barrel was competed. The results are summary and graphic output are attached. The analysis indicates that the inner tube can be thinner than the predicted 21 mm. An acceptable thickness is estimated to be 17 mm.

3.5 ASME Code calculations were made for various ribbing arrangements on the LKr inner barrel with a goal of reducing the average wall thickness. The use of ribs will have to be evaluated as part of a larger study.

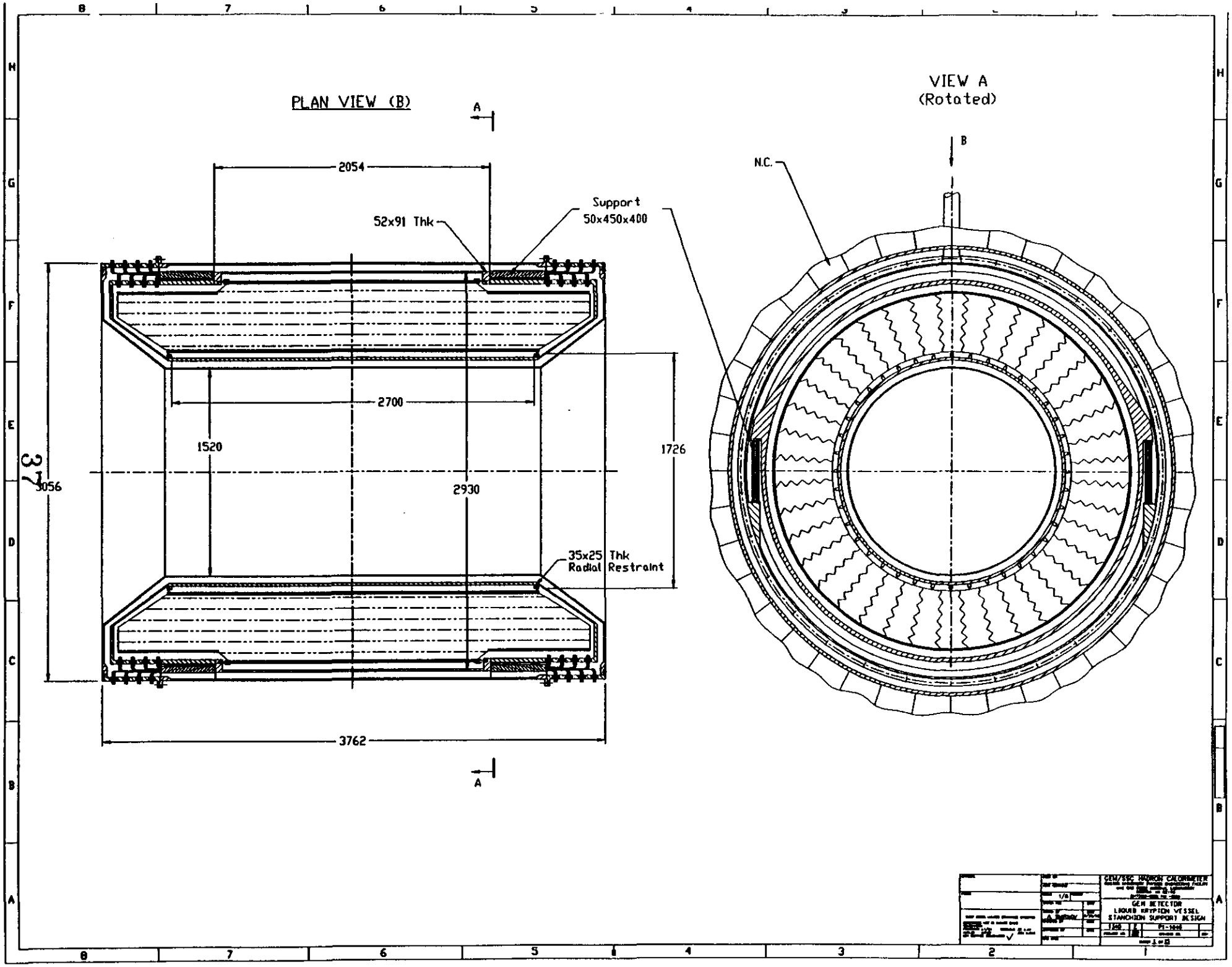
PLAN VIEW (B)
A
2054
52x91 Thk
Support
50x450x400
2700
1520
1726
3056
2930
35x25 Thk
Radial Restraint
3762
A
VIEW A
(Rotated)
B
N.C.
GEM/SSC HADRON CALORIMETER
GEM DETECTOR
LIQUID KRYPTON VESSEL
STANCHION SUPPORT DESIGN

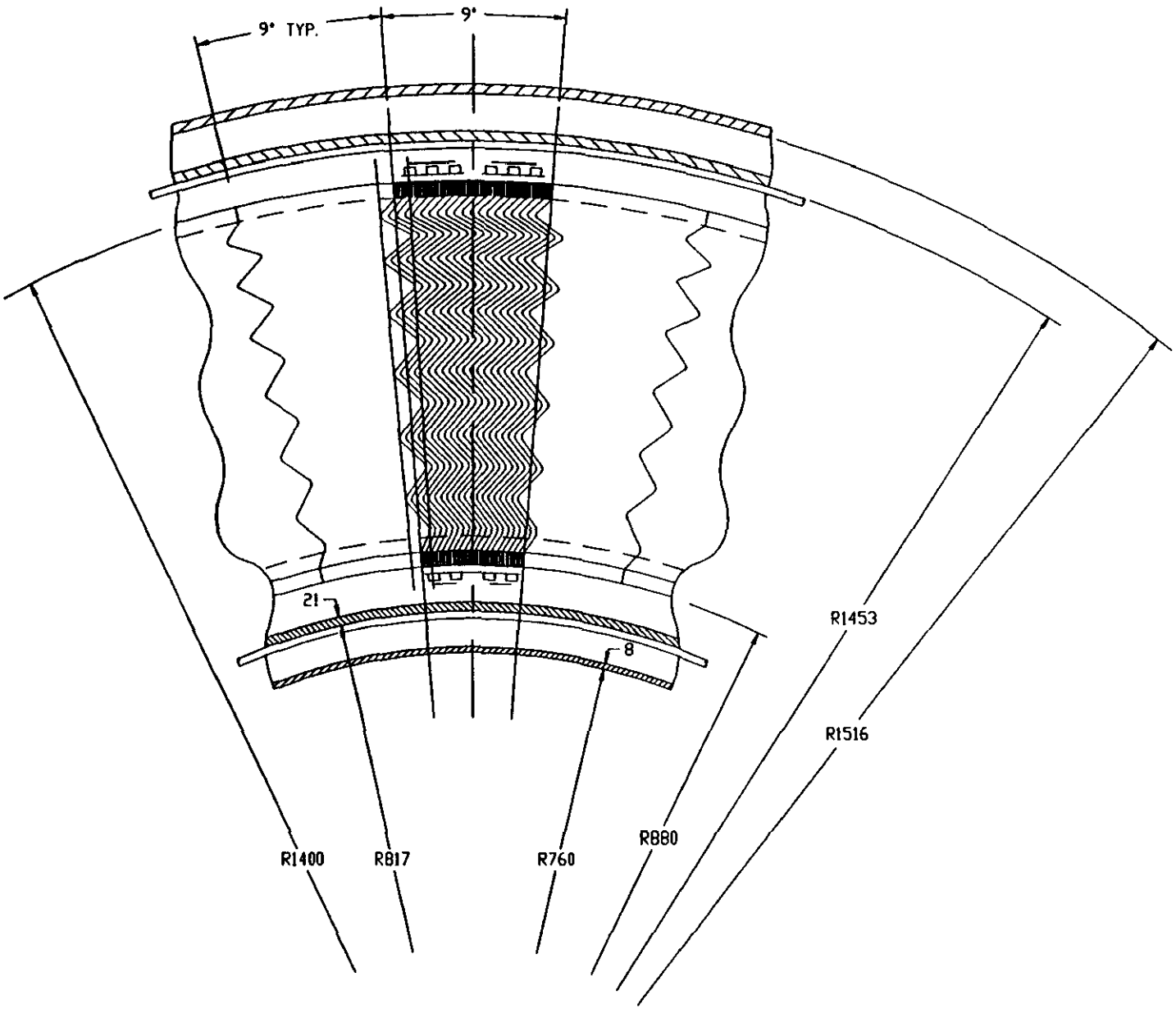

GEM DETECTOR
LIQUID ARGON EM CALORIMETER

Barrel EM Calorimeter Vessel Wall Thickness Calculation, ASME VIII

Inner wall of Vacuum Vessel **15 PSI** **External Pressure**

Number of Support Ribs	Vessel Wall Thickness	Max Distance Between Ribs
0	10	2900
1	7.5	1450
2	6.3	967
3	5.75	725
4	5.25	580

Inner Wall of Cold Vessel **45 PSI** **External Pressure**

Number of Support Ribs	Vessel Wall Thickness	Max Distance Between Ribs
0	16.75	2800
1	13.25	1400
2	12	933
3	11.25	700
4	10.5	560

Outer Wall of Cold Vessel **45 PSI** **Internal Pressure**

Number of Support Ribs	Vessel Wall Thickness	Max Distance Between Ribs
0	8	3600

Buckling Analysis

Outer Wall of Vacuum Vessel **15 PSI** **External Pressure**

Number of Support Ribs	Vessel Wall Thickness	Max Distance Between Ribs
0	17	3800
1	12.75	1900
2	11	1267
3	10	950
4	9.25	760

Super Collider Hybrid Design
Structural Analysis Summary[1]

Gravity Loading

1. Maximum Shell Von Mises Stress: 1930 kPa
2. Maximum Reference Ring Tensile Stress: 14015 kPa (Outer)
3. Maximum Reference Ring Shear Stress: 270 kPa (Outer)
4. Relative Diametral Change For Inner Vessel: 0.0mm

Pressure Loading

1. Maximum Shell Von Mises Stress: 45950 kPa
2. Maximum Reference Ring Tensile Stress: 70000 kPa (Outer)
3. Maximum Reference Ring Shear Stress: 550 kPa (Outer)
4. Relative Diametral Change For Inner Vessel: $+2.089 \times 10^{-2}$mm

Gravity and Pressure Loading

1. Maximum Shell Von Mises Stress: 46030 kPa
2. Maximum Reference Ring Tensile Stress: 76235 kPa (Outer)
3. Maximum Reference Ring Shear Stress: 810 kPa (Outer)
4. Relative Diametral Change For Inner Vessel: $+2.089 \times 10^{-2}$mm

Material Allowables, 5083-O Aluminum
$F_u = 275,000$ kPa
$F_y = 124,000$ kPa
$F_s = 172,000$ kPa
Reference MIL-HDBK-5E

[1] psi $\times$ 6.894 = kPa

Gravity Loading

1

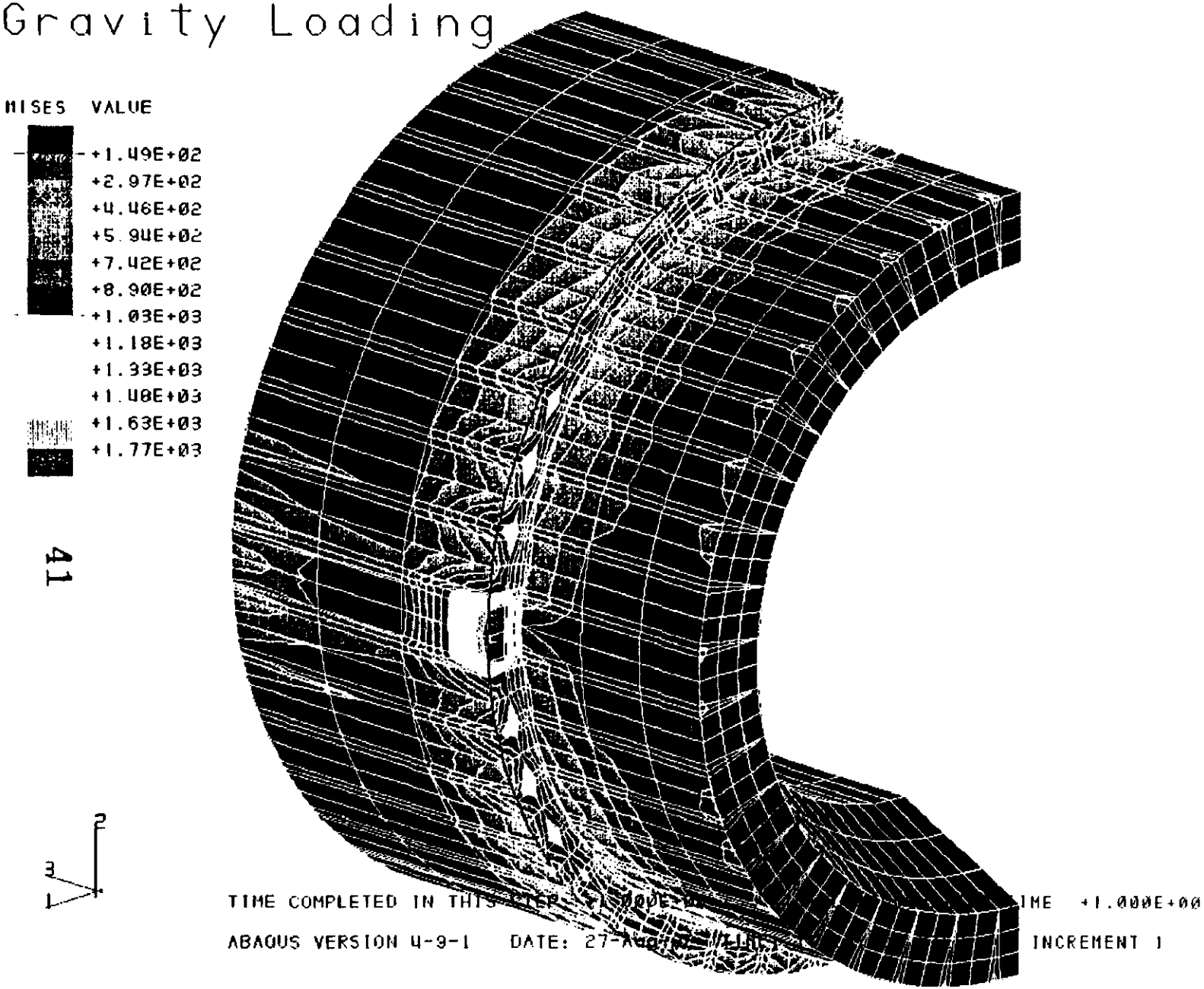

Gravity Loading

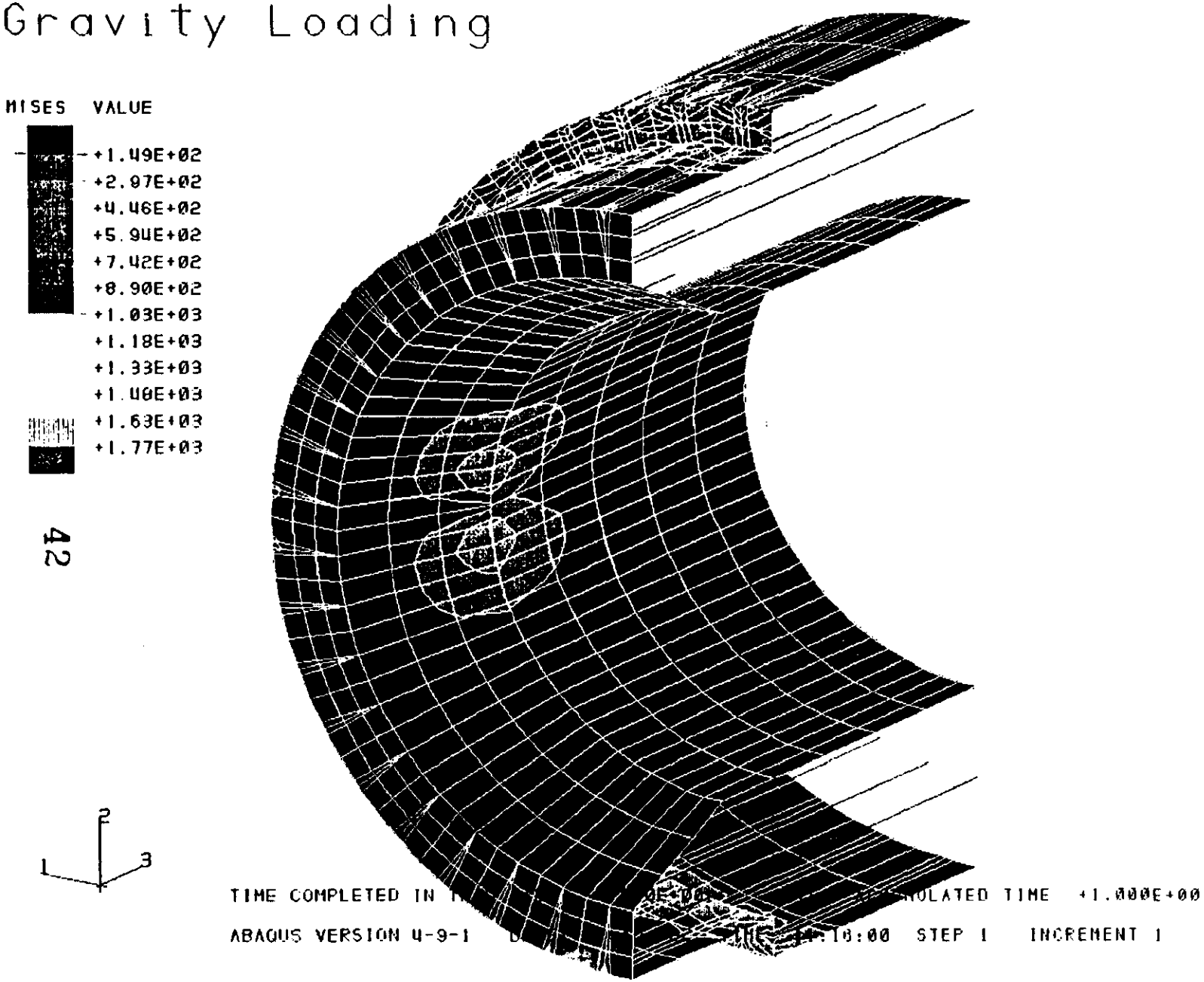

Gravity Loading

1

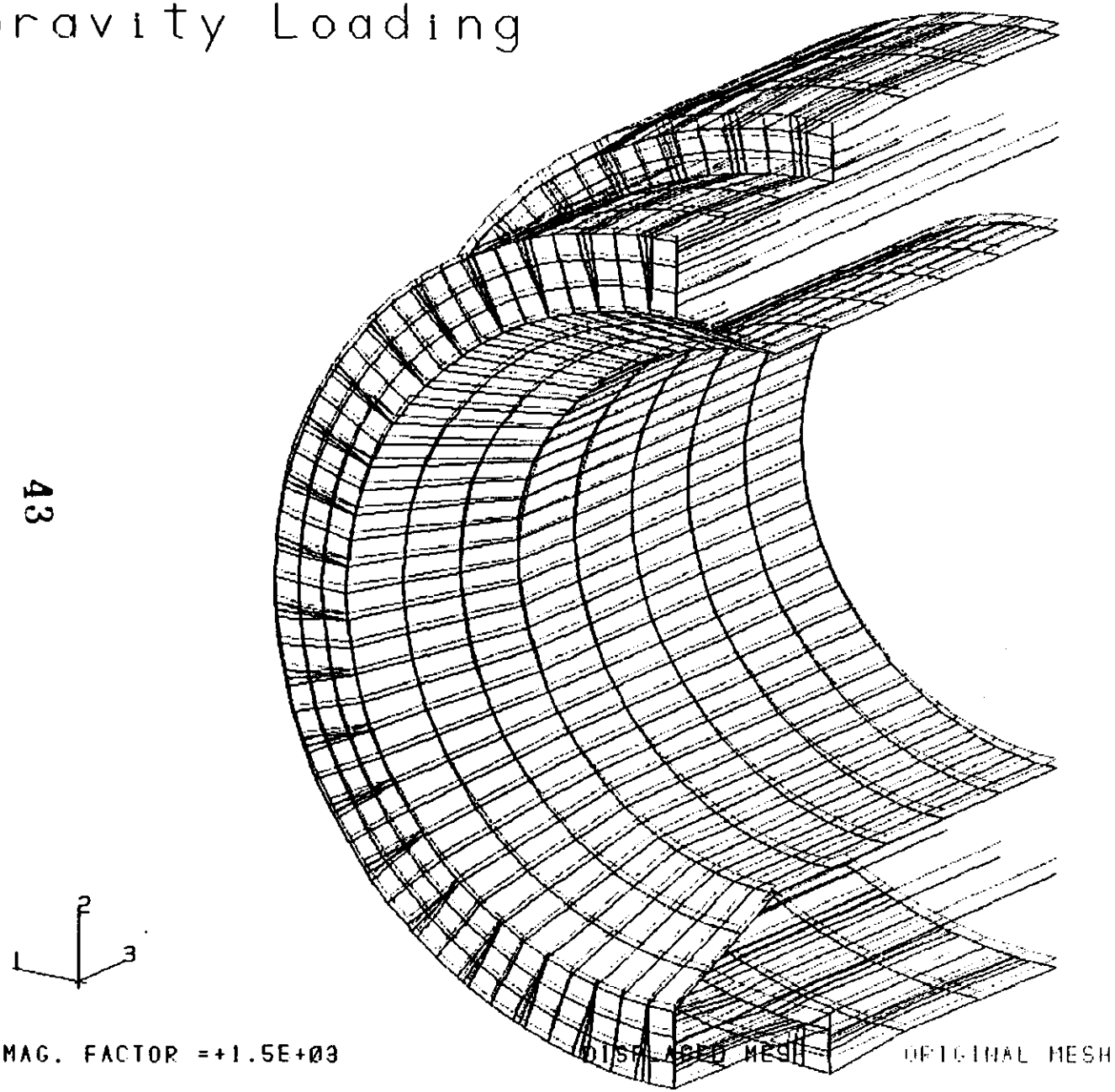

Gravity Loading

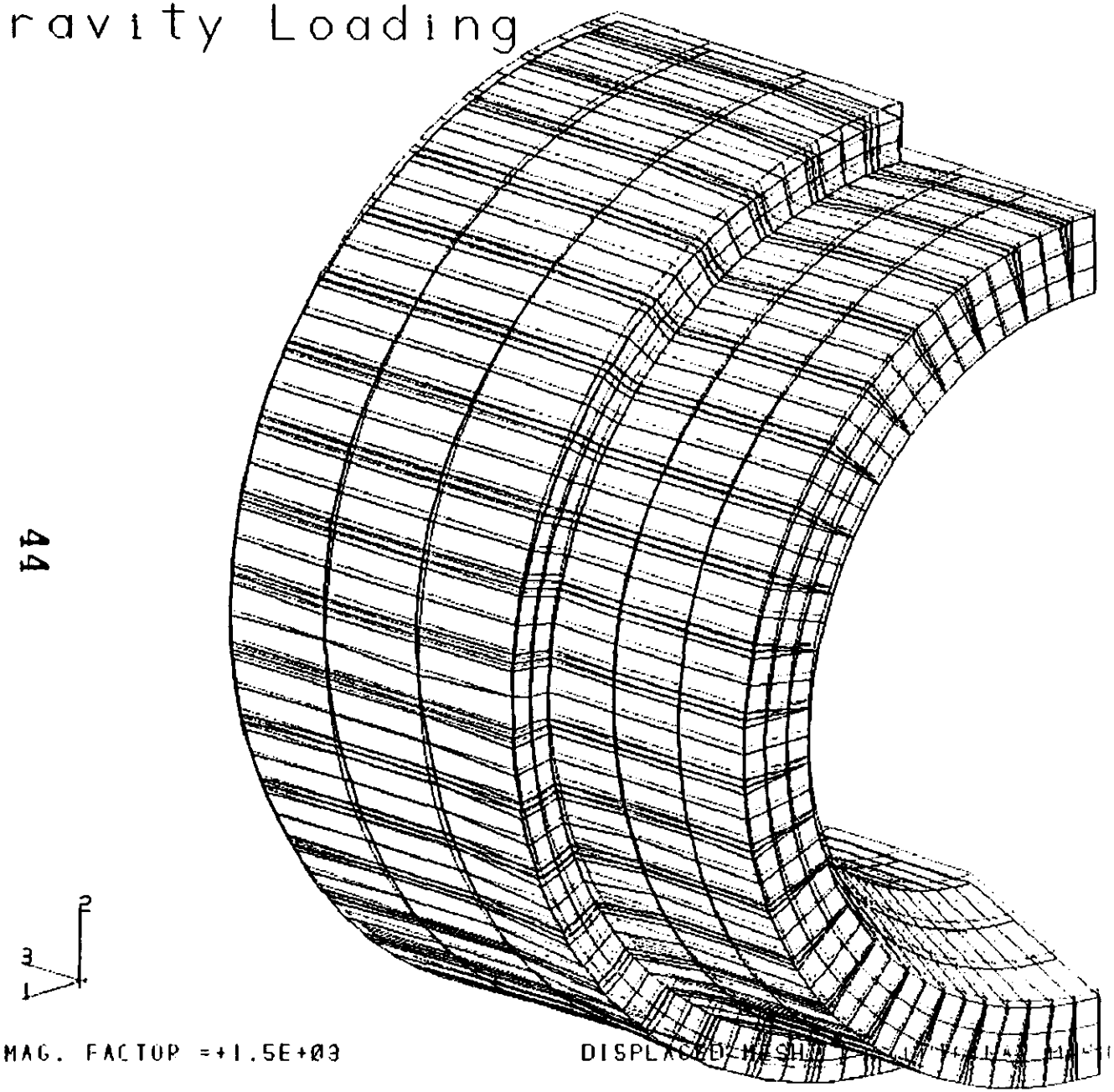

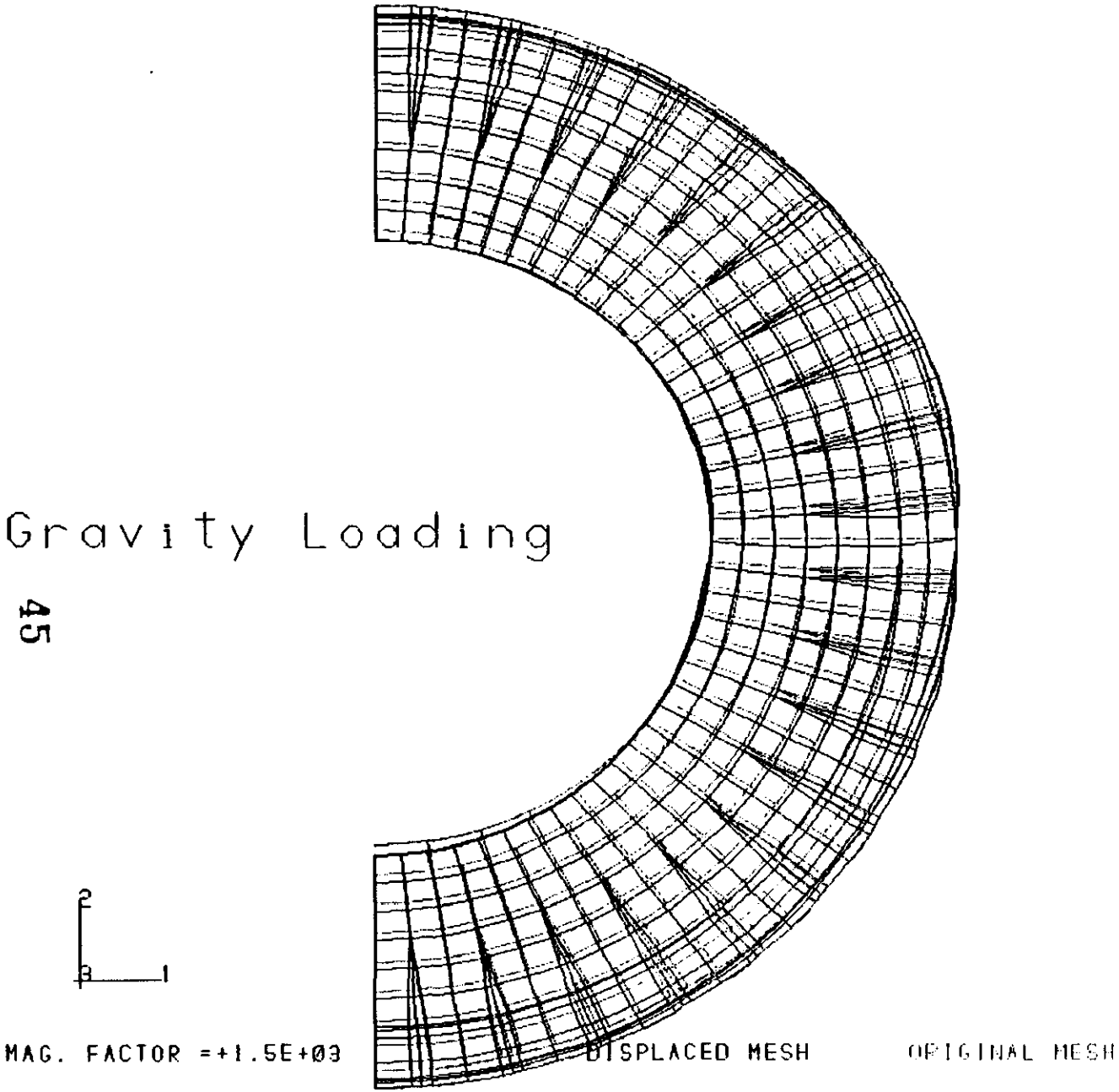
Gravity Loading
45
2
3
1
MAG. FACTOR =+1.5E+03
DISPLACED MESH
ORIGINAL MESH

Pressure Loading

1

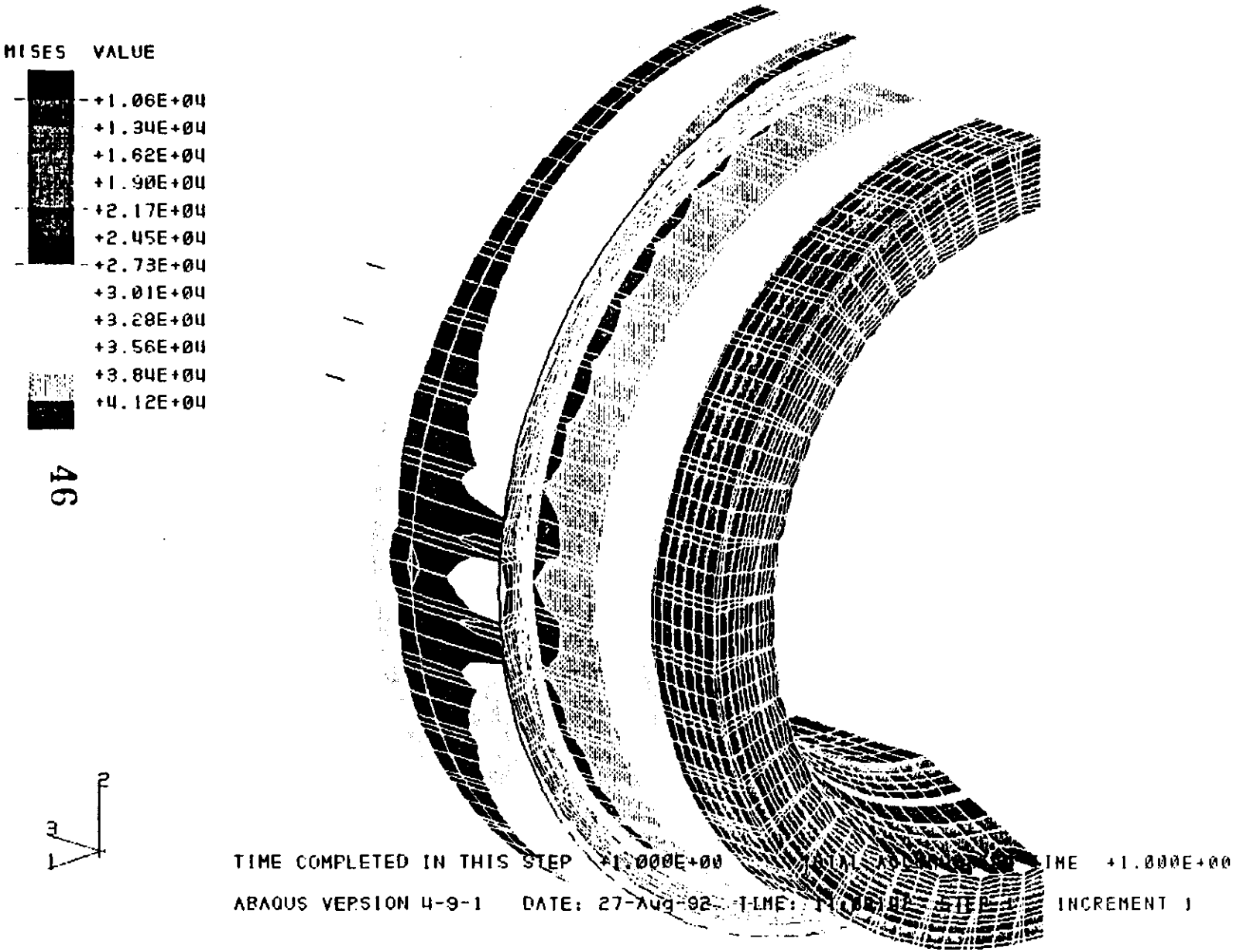

Pressure Loading

1

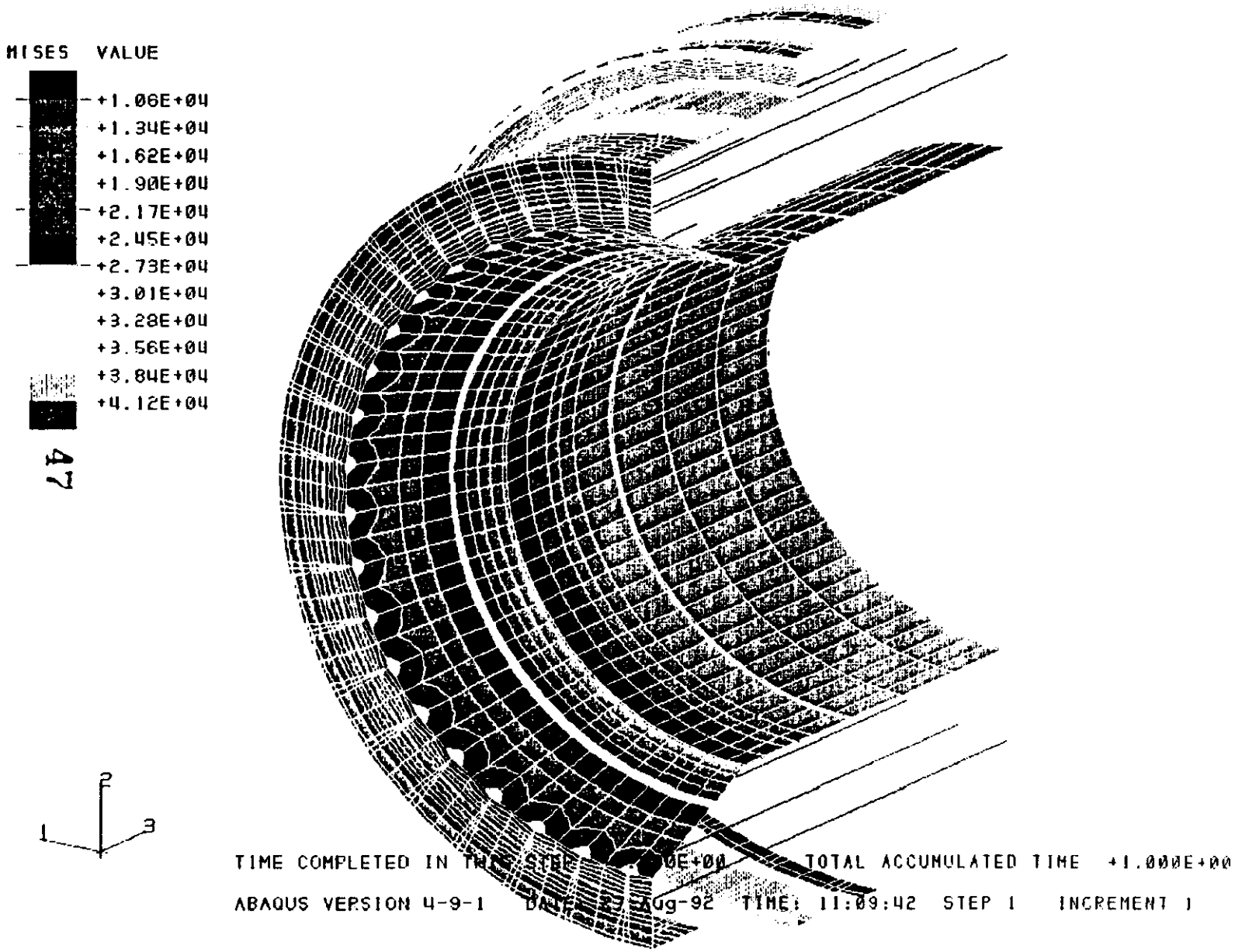

47

Pressure Loading

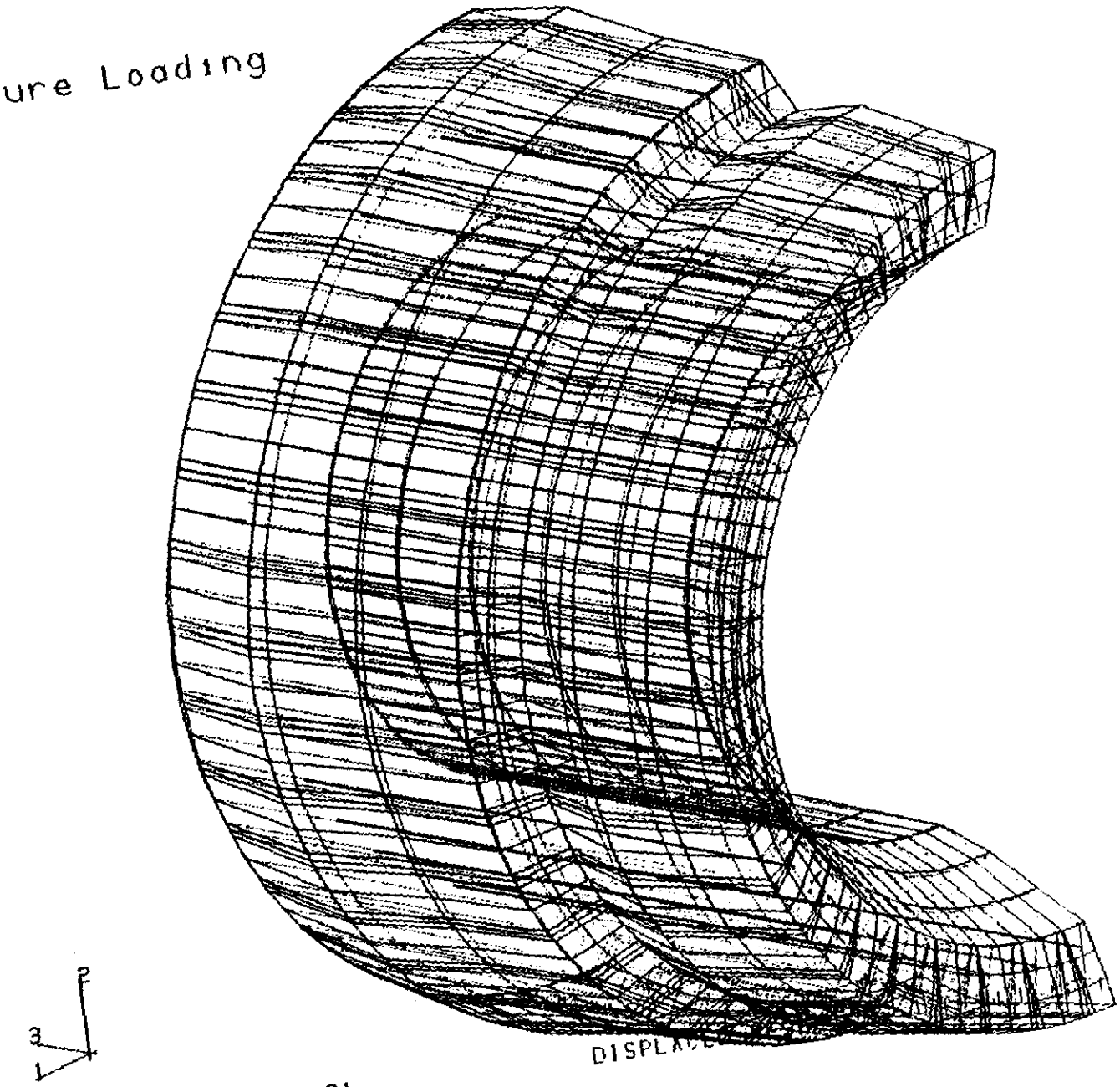

Pressure Loading

1

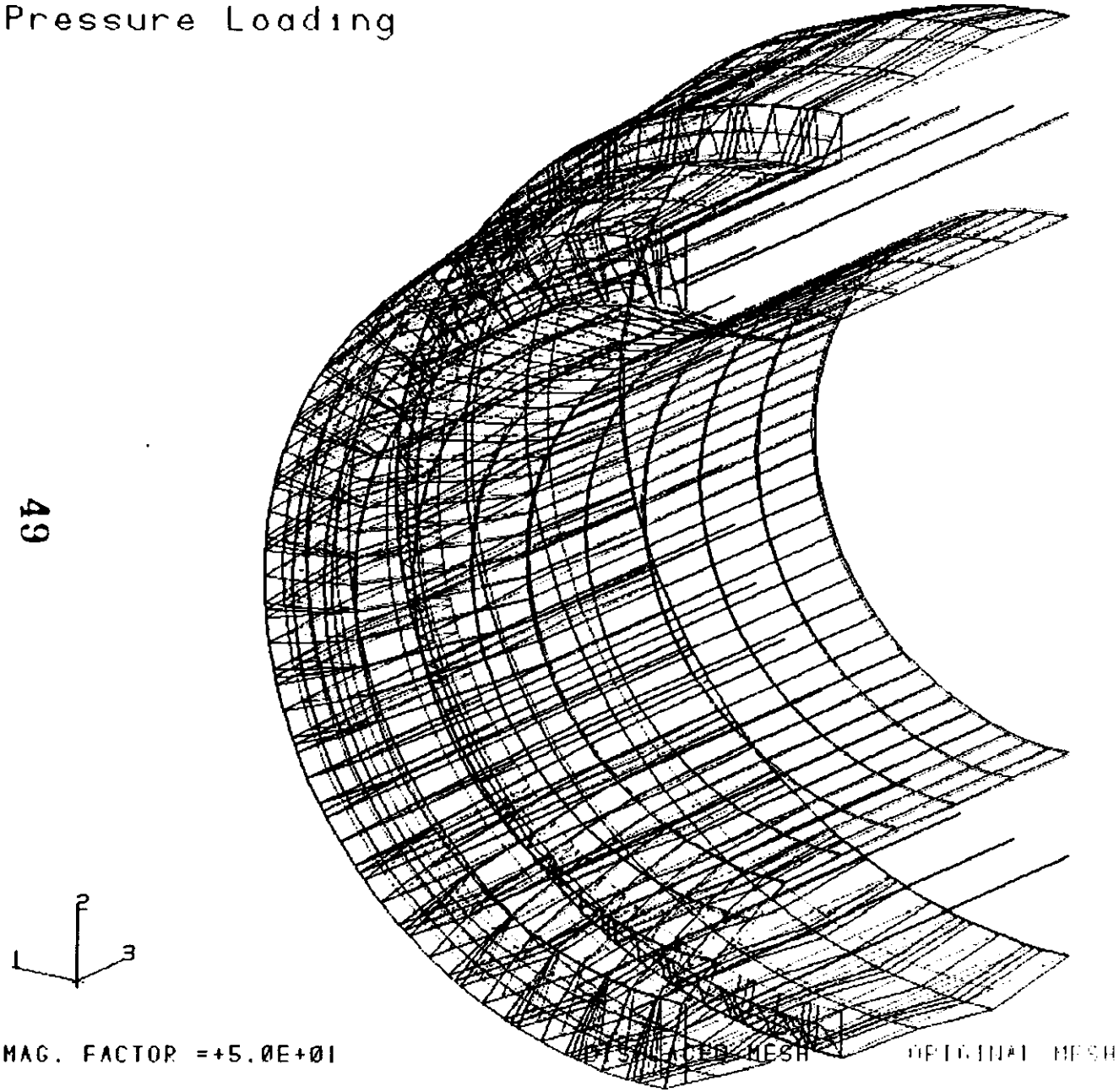

Pressure Loading

50

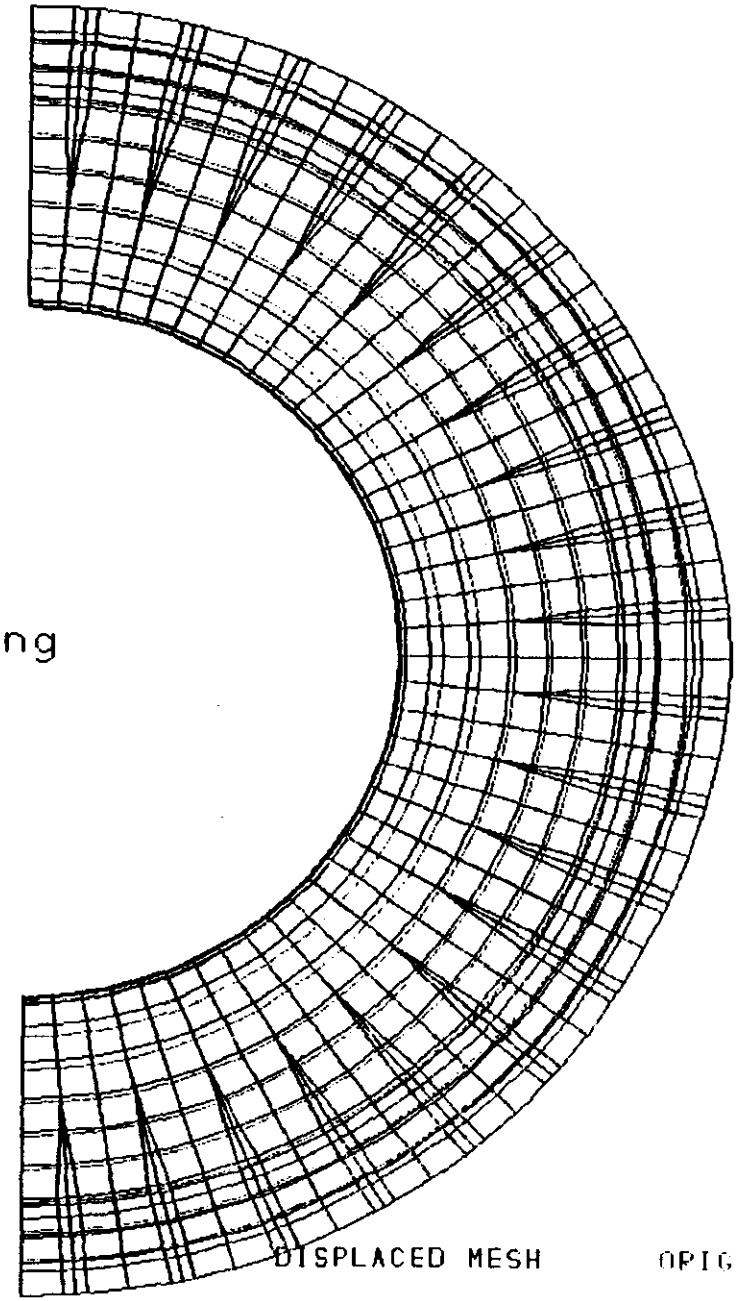

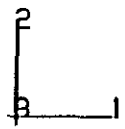

MAG. FACTOR =+7.0E+01

DISPLACED MESH

ORIGINAL MESH

Gravity and Pressure Loading

1

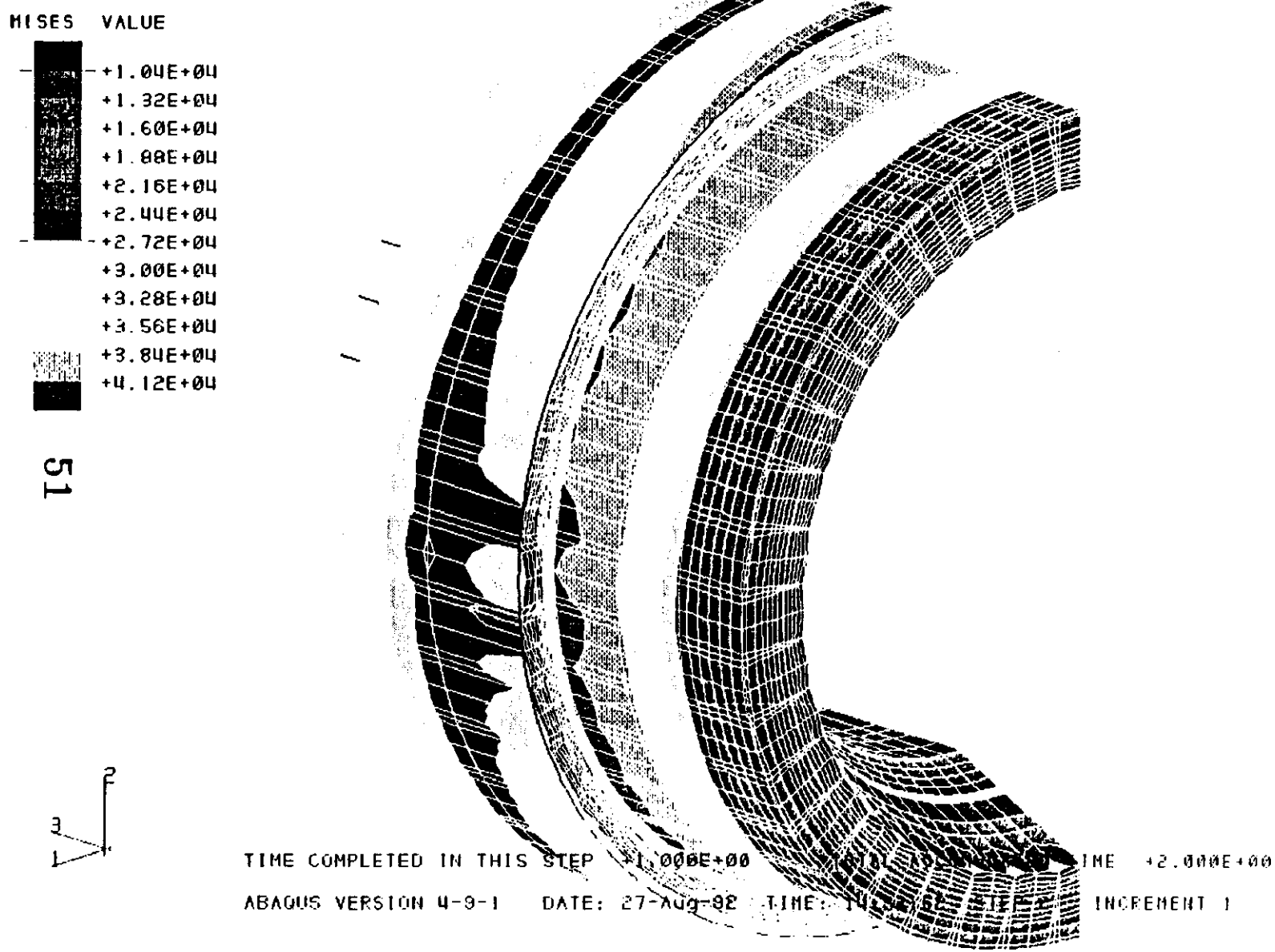

Gravity and Pressure
Loading

1

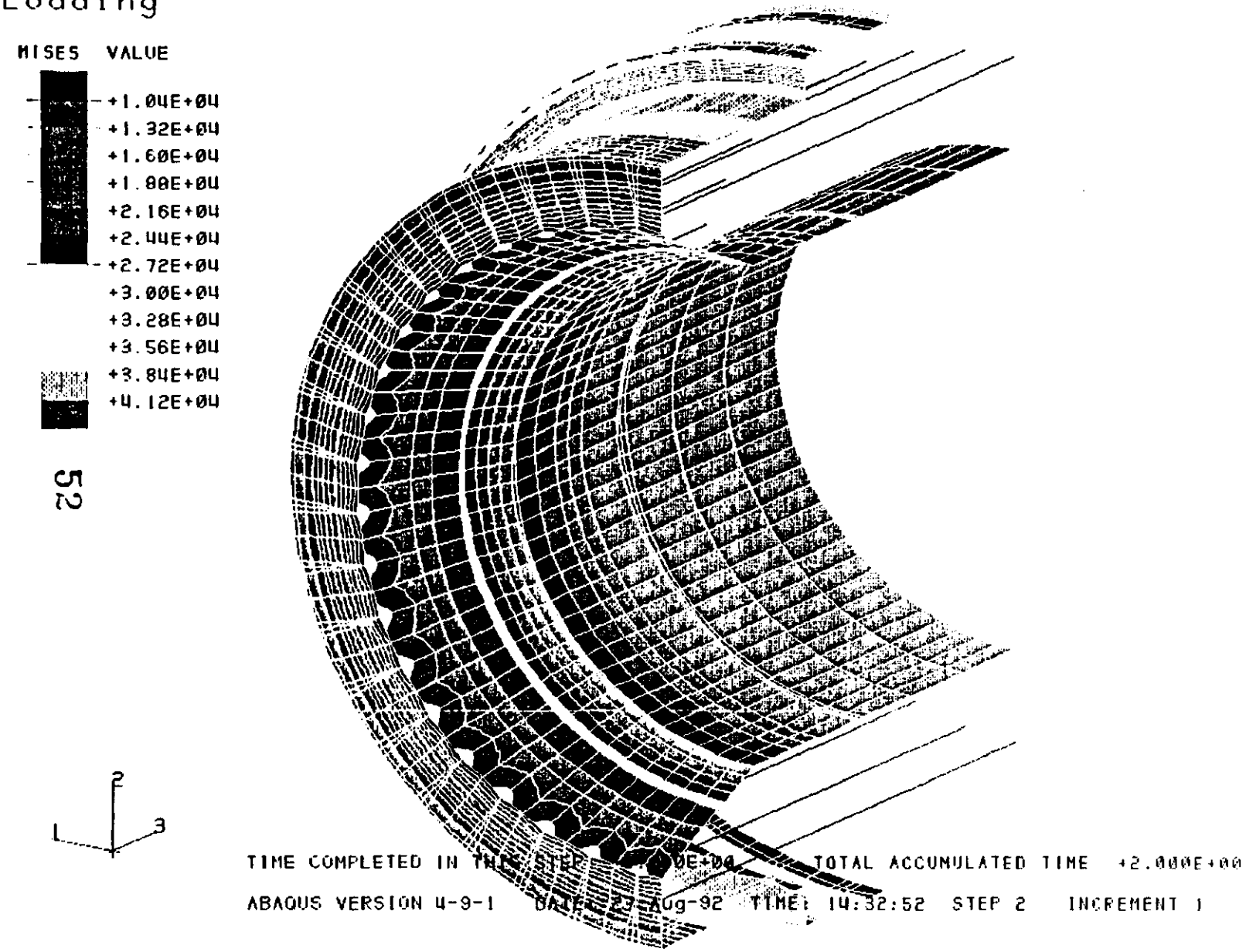

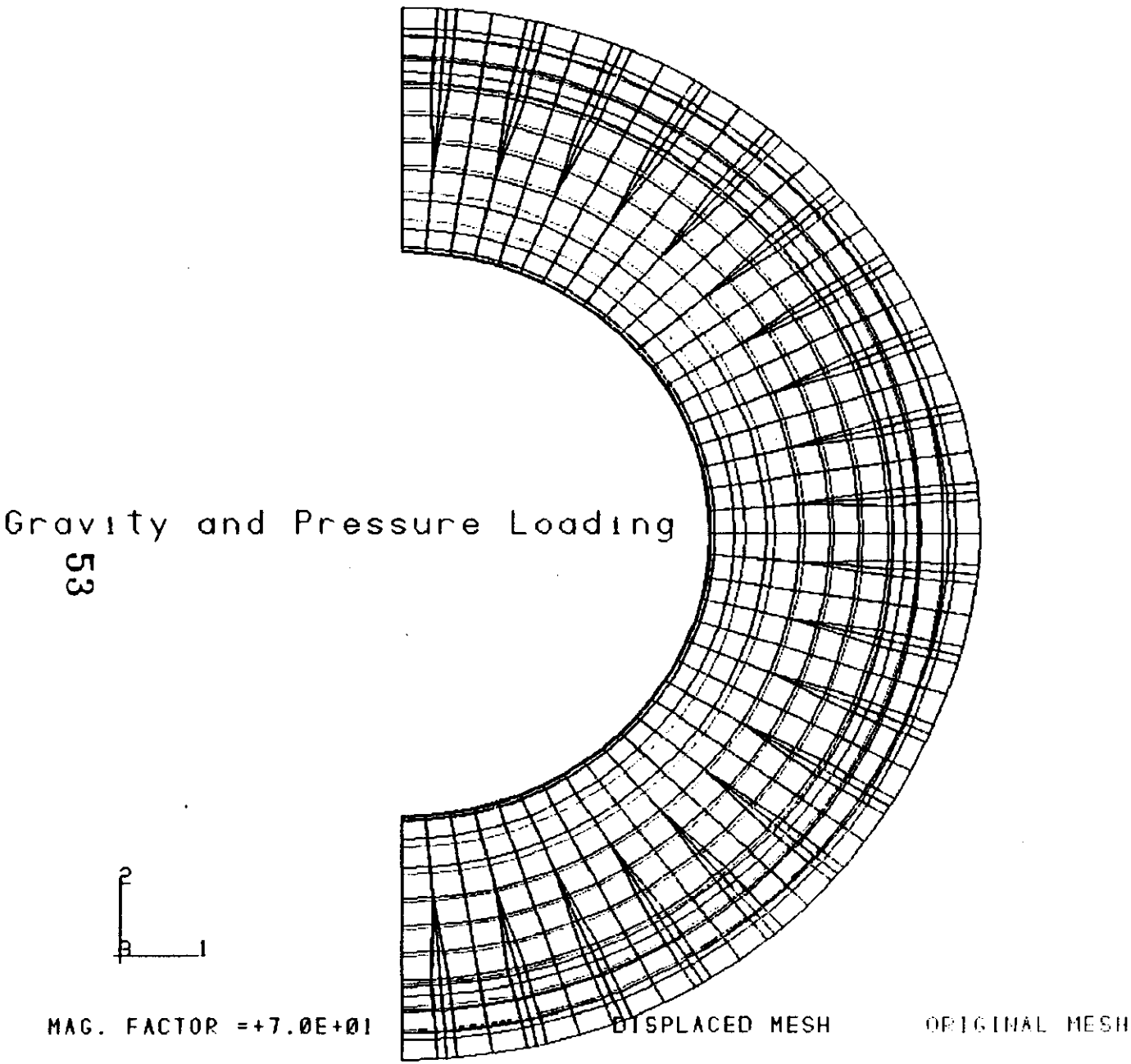
Gravity and Pressure Loading
53
2
3
1
MAG. FACTOR =+7.0E+01
DISPLACED MESH
ORIGINAL MESH

Gravity and Pressure
Loading

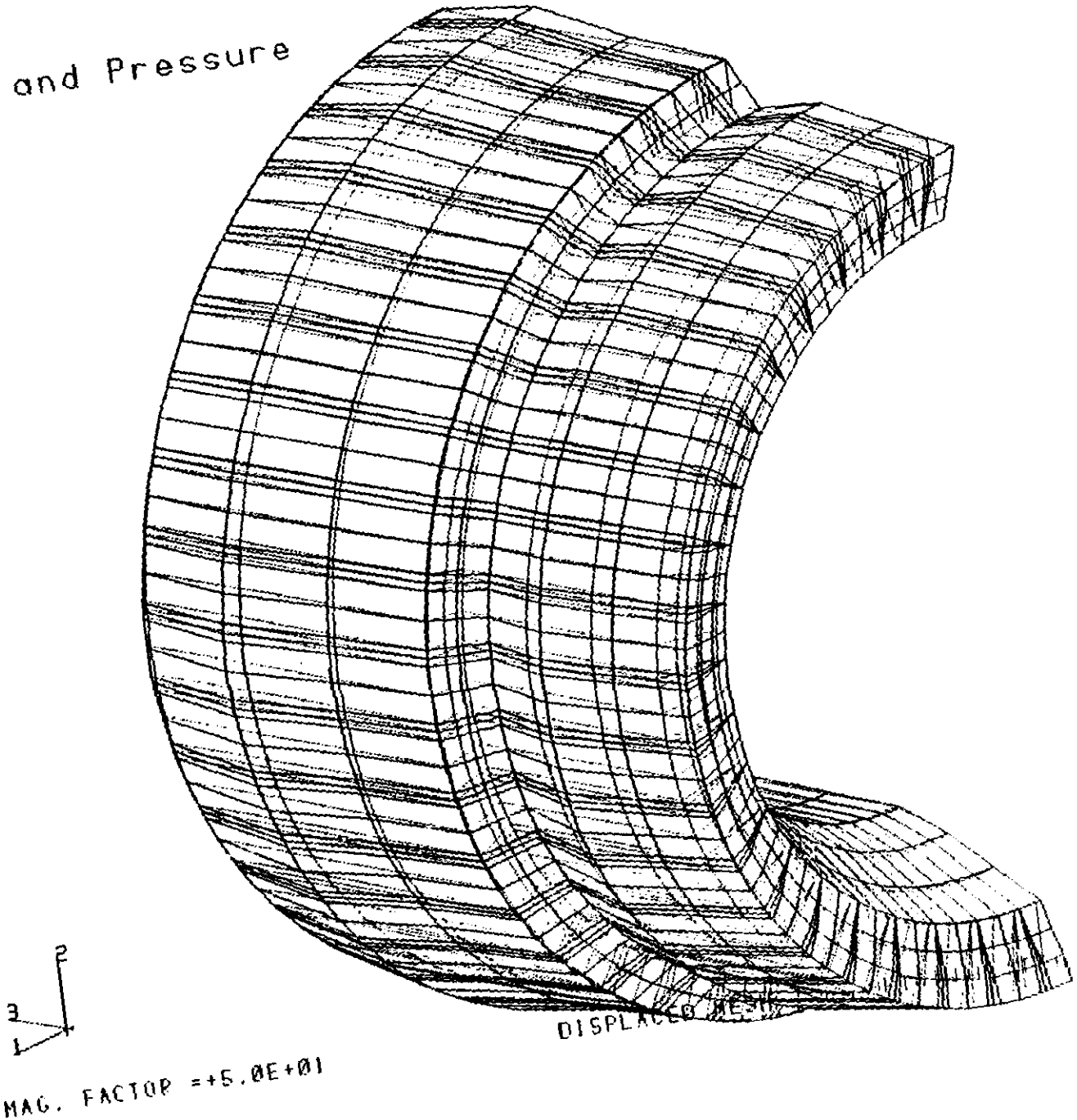

Gravity and Pressure
Loading

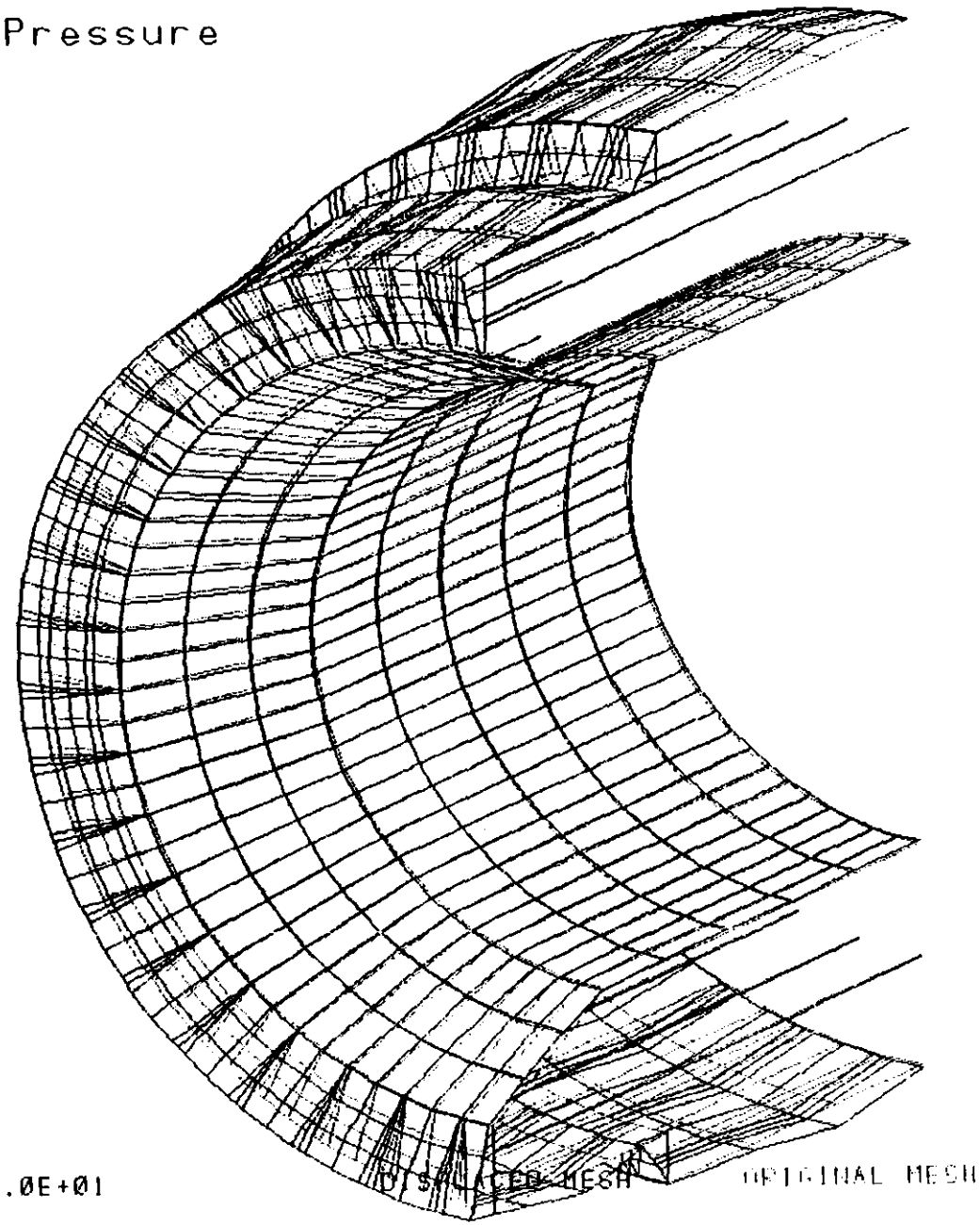

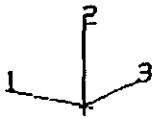

MAG. FACTOR =+5.0E+01

ALUMINUM ALLOY 5083

Aluminum alloy-5083 is one of the Aluminum-Magnesium alloys widely used in places requiring good cryogenic properties because of its high strength, good forming and welding qualities, and excellent corrosion resistance. Al-5083 has good welding response when commercial shielded arc processes are used. Weld strength equals the annealed strength of the alloy and the weld exhibits good ductility.

Al-5083 is a non-heat treatable commercial aluminum-magnesium alloy. The alloy composition consists of 0.7% Manganese, 4.4% Magnesium, 0.15% Chromium, and 94.75% Aluminum by weight. Al-5083 has the second highest annealed yield strength (21 ksi at annealed & 33.4 ksi with H116 temper), and the highest fatigue limit (23.2 ksi with H116 temper) among the commercial alloys.

Properly fabricated Al-5083 is structurally stable at room temperature while structural instability occurs among the most of other high strength (strain hardened) Aluminum-Magnesium alloys which contain more than 3% magnesium. While high magnesium content in 5XXX series Aluminum-Magnesium alloys provides excellent corrosion resistance and weldability in addition to substantial strengthening with good ductility, it causes structural instability at room temperature or elevated temperature in the presence of work-hardened condition. Structural instability is caused by precipitation of magnesium at the grain boundaries which produces susceptibility to intergranular cracking and stress corrosion. The grain boundary precipitation occurs slowly at room temperature, but prior cold work or exposure to elevated temperature accelerates precipitation significantly. This kind of structural instability due to the grain boundary precipitation is eliminated or minimized from Al-5083 while retaining high strength and other qualities of the alloy by applying H116 temper fabrication method and avoiding prolonged exposure to elevated temperatures above 80F.

0.7% of manganese content increases the strength of the alloy without substantial reduction of ductility and reduces the susceptibility to intergranular or stress corrosion

4.0 Support of EM Barrel

Issue: The EM barrel can be supported either at the mid point via a membrane through the hadron or on a conventional four point system.

Comments:

4.1 The membrane support of the EM barrel was discarded since it added too much material between the EM and hadron systems by requiring the vacuum vessel to the increased in thickness. In addition the basic configuration did not fit with the proposed Krypton vessel mounting scheme.

4.2 Figure P-00ii (TBD) shows the four point mounting scheme proposed for the barrel. The scheme requires the barrel to be installed with an internal beam roller system as discussed under "Assembly" below.

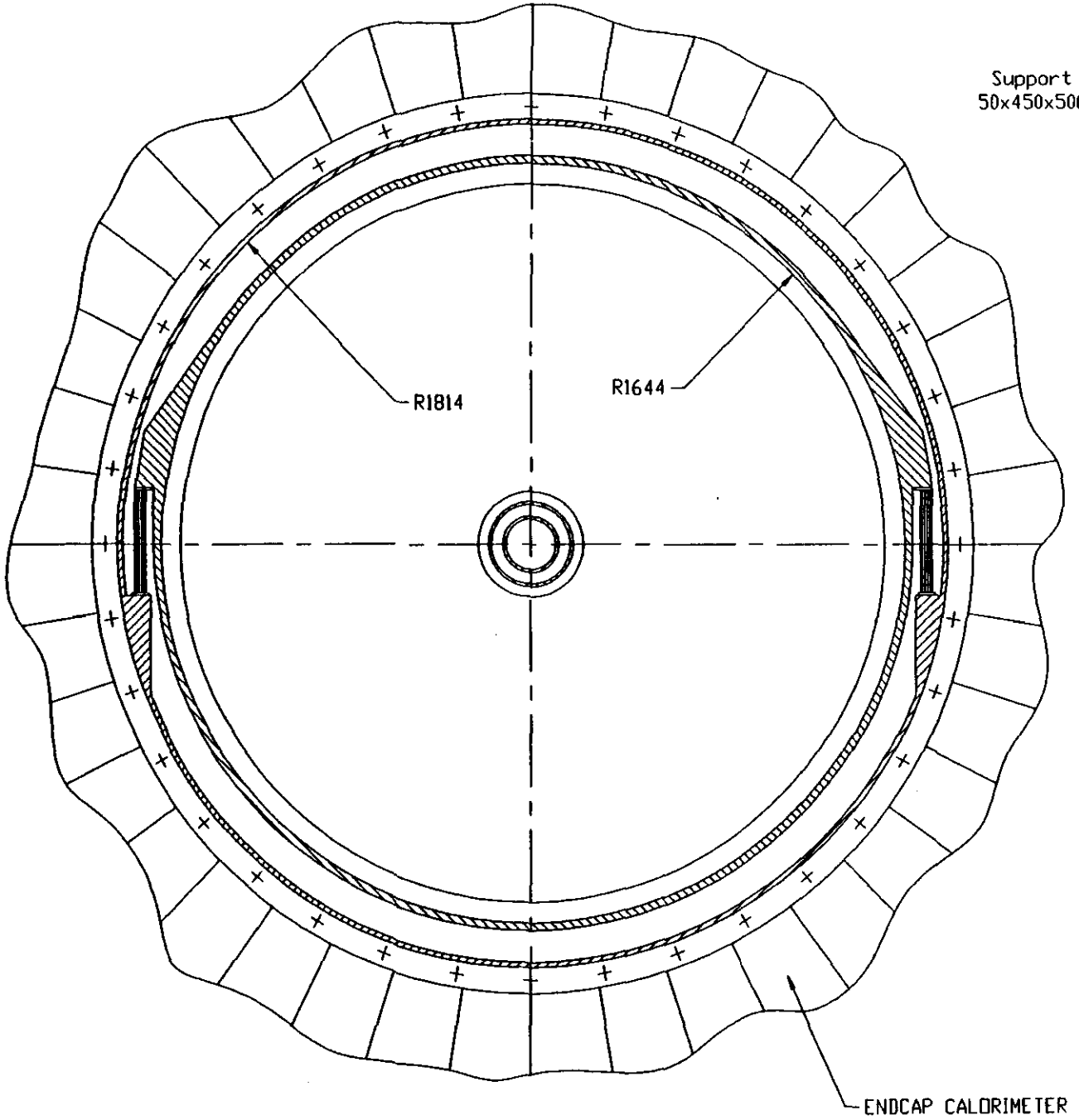

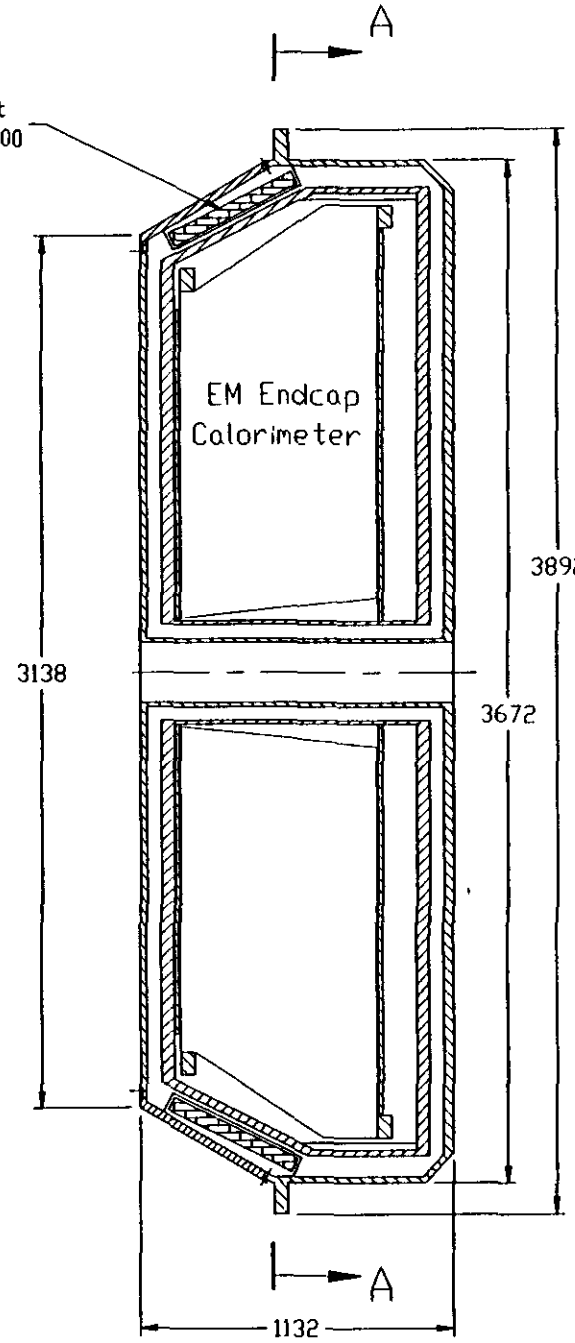

CEM/SSC HADRON CALORIMETER

GEM DETECTOR
LKr ENDCAP CALORIMETER
STANCHION SUPPORT DESIGN

5.0 Installation of EM System

Issue: The installation of the EM system must be compatible with both the overall GEM assembly scenario and schedule.

Comments:

5.1 The calorimeter installation schedule provides the calorimeter with a hall dedicated installation period of 4 months. This means that the basic system will be placed in the GEM detector during this period and that wiring and other peripheral services will be installed before and after.

5.2 Cryo vessel leak problems are of concern. Substantial schedule risk is possible if significant vessel structural or feedthrough leaks of failures occur during installation.

5.3 Figure P1-0028 shows the installation of the EM barrel in the hadron barrel. The EM end caps will be installed in the hadron end caps on the surface.

5.4 The entire calorimeter system will be fitted together on the surface to insure matching and to accelerate the installation time.

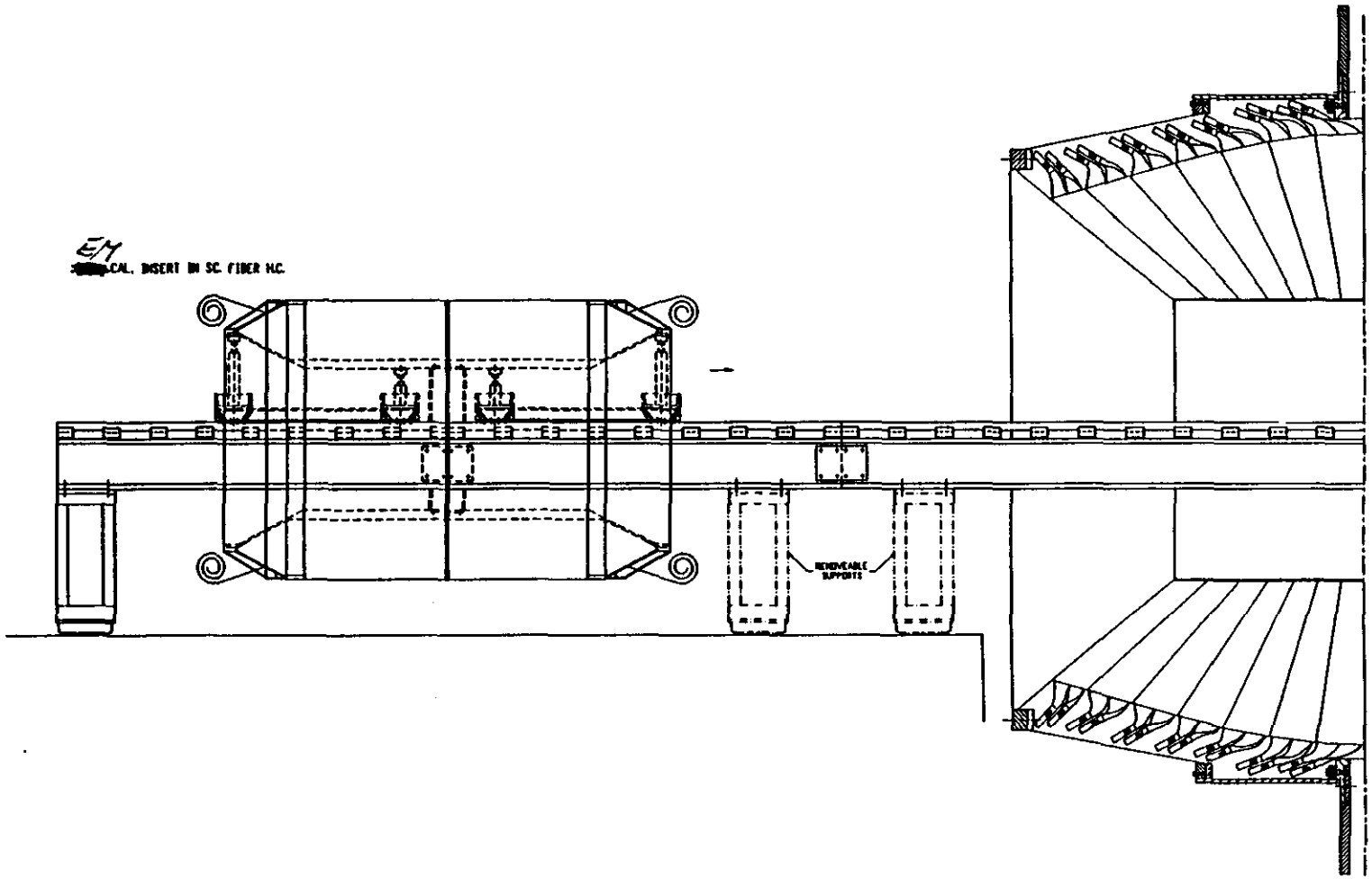

GEM/SSC HADRON CALORIMETER

GEM DETECTOR

6.0 Local Vacuum Pumping of the EM system

Issue: Determine if local vacuum pumping is required

Comments:

6.1 The current design does not have adequate space for local vacuum pumping.

6.2 If the vessels adequately sealed local pumping will not be required. This will put a premium on vessel quality control; particularly welding and feedthroughs. Exceptional testing of such items as the stock plate may also be required.

6.3 The current concept assumes all seals will be welded and that over 90% of all welds will be X-ray inspected.

7.0 EM Calorimeter Maintenance

Issue: The EM calorimeter will be located and mounted inside the hadron calorimeter with only annual access.

Comments:

7.1 Figure P-00ii shows the location of the electrical feedthroughs. The positions of the feedthroughs will allow testing and maintenance access without removing the EM calorimeter from the hadron system.

7.2 Exceptional vessel quality assurance procedures will have to be implemented to insure against structural and fatigue failures.

7.3 Barrel liquid and vacuum lines are routed through the fiber calorimeter at the eta=0 line. This will complicate the removal of the barrel if required for major repair.

8.0 Barrel EM Accordion Module Assembly

Issues

a. The accordion modules must be mounted in thin walled vessels which offer poor structural support.

b. The accordion plates have asymmetrical coefficients of thermal contraction.

c. The large number of plates (800 absorbers) and spacers will have excessive tolerance stackup.

Comments:

8.1 Conceptual layouts for mounting of the barrel accordion modules were studied. Six basic options for the assembly of the modules were proposed as shown in the attached figures. Calculations for the tolerance stack-up of the assembly options are also attached. Two of the options represent realistic possibilities. Option Four is considered the most straight forward; however, it will result in gaps between the 40 modules. Option Six eliminates the gaps through extensive handwork; however, it requires additonal material and space on both the inside and outside of the accordion stack. An initial impression is that a compromise between the two options could be the most effective approach.

Option One (Figure G.03.LM.015):

Modules are compressed between two fixed rings. The compression of the accordion permits most of the tolerance gaps to be removed thus providing a very uniform and hermetic array of plates.

This option was discarded because the estimated compressive forces (30-100 psi) will require substantial structural vessels which in turn will not meet the material specifications for the calorimeter.

Option Two (Figure G.03.LM.013):

Modules are mounted on a fixed inner radius ring. The advantage of this option is to minimize the clearance and material between the active EM system and the tracker.

This option was discarded since it requires tolerance gaps between all the modules. The gaps are estimated to be between (1 and 2 mm)

Option Three (Figure G.03.LM.014):

A variation on Option Two in which the modules are fixed on the inner edge; however, the inner diameter is adjusted to account for tolerances between the modules. This option has the advantage of insuring the best accordion fit at the most important area of the accordion array.

This option was discarded due to the complexity of mounting the accordion assembly on the inner liquid vessel wall which is to be designed to be as thin as possible. Thermal contraction of the accordion would also have to be accounted for on the outer edge where the operating temperature would open gaps in the array.

Option Four (Figure G.03.LM.012):

Assembly of the array by attaching the modules at the outer edges with gaps provided between modules to account for differential thermal contraction will minimize the tolerance stack-up and provide for the best fit-up. Outer edge attachment will minimize the structural requirements on the thin inner vessel.

This is the preferred option. The control of the assembly quality (tolerances and gaps) will be a function of vendor selection and inspection criteria. The application of statistical and dimensional process feedback control during assembly should improve the quality of the assembly.

Option Five (Figure G.03.LM.016):

Assembly of the barrel array in two half barrels could be used to concentrate the gaps at the two half barrel joints. This would allow the location of measuring inaccuracies to be known.

This option does not adequately address the differential thermal contraction problems of the accordion plates.

Option Six (The 4000 legged stool)

Position all forty modules vertically on a calibrated set-up stand using the inner row as the diametrical reference. Adjust the outer spacers according to measurements taken on the set-up stand to establish a uniform fit between the plates. The small wedge angle on the outer spacers will necessitate approximately 5 cm of additional accordion extension to insure complete alignabilty.

This option assumes that the differential thermal expansion can be compensated by mechanical means provided in the accordion assemlby without reliance on rigid structural supports.

Alignment of the 800 plates and 1600 spacers will require a very high level of craftsmenship and care. Compromises in the gaps and rework of spacers will probably be required. Special attention will have to be given to the elimination of systematic errors which result in non-uniform performance.

8.2 Calculations which were used to determine the weight of the barrel accordion modules and assembly are attached.

8.3 Martin Marietta Denver calculated the differential thermal contraction of the accordion plates to be 0.12%. This results in a radial differential contraction of approximately 0.6 mm between operating and room temperatures.

8.4 The barrel vessel structural analysis included the support of the accordion plates (See Section 3). The structural deflection requirement is an important component in the design. The current layout has two structural module attachment rings attached to the outer shell of the LKr vessel. Using this configuration the sag of the assembly will be 21 microns.

8.5 A tolerance stack-up worksheet is attached. It shows that despite component manufacturing tolerances in the sub-mil range the overall assembly will still require careful assembly to provide a precise and uniform calorimeter.

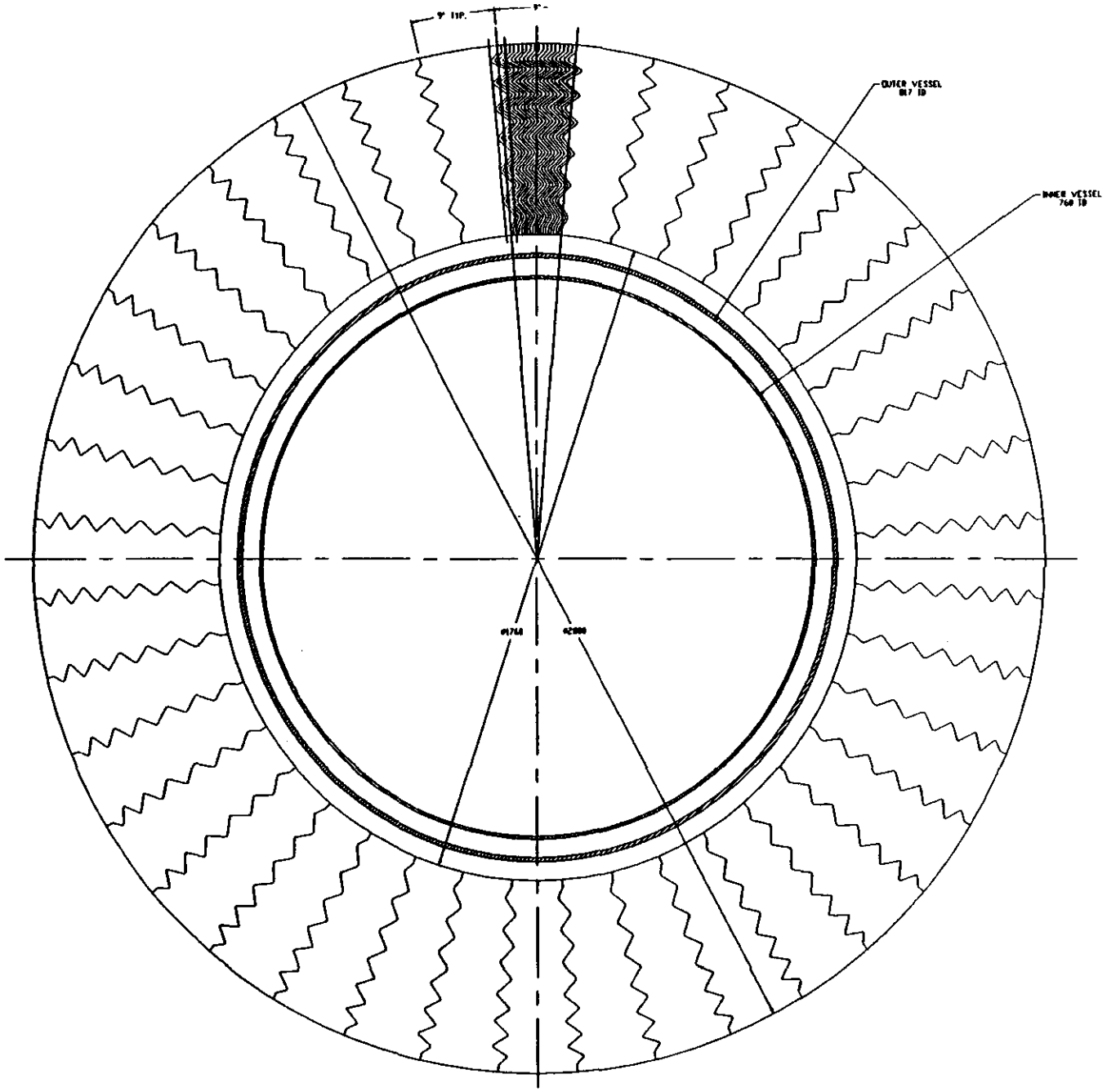

GEM DETECTOR
LIQUID ARGON EM CALORIMETER

DO NOT REVISE MANUALLY

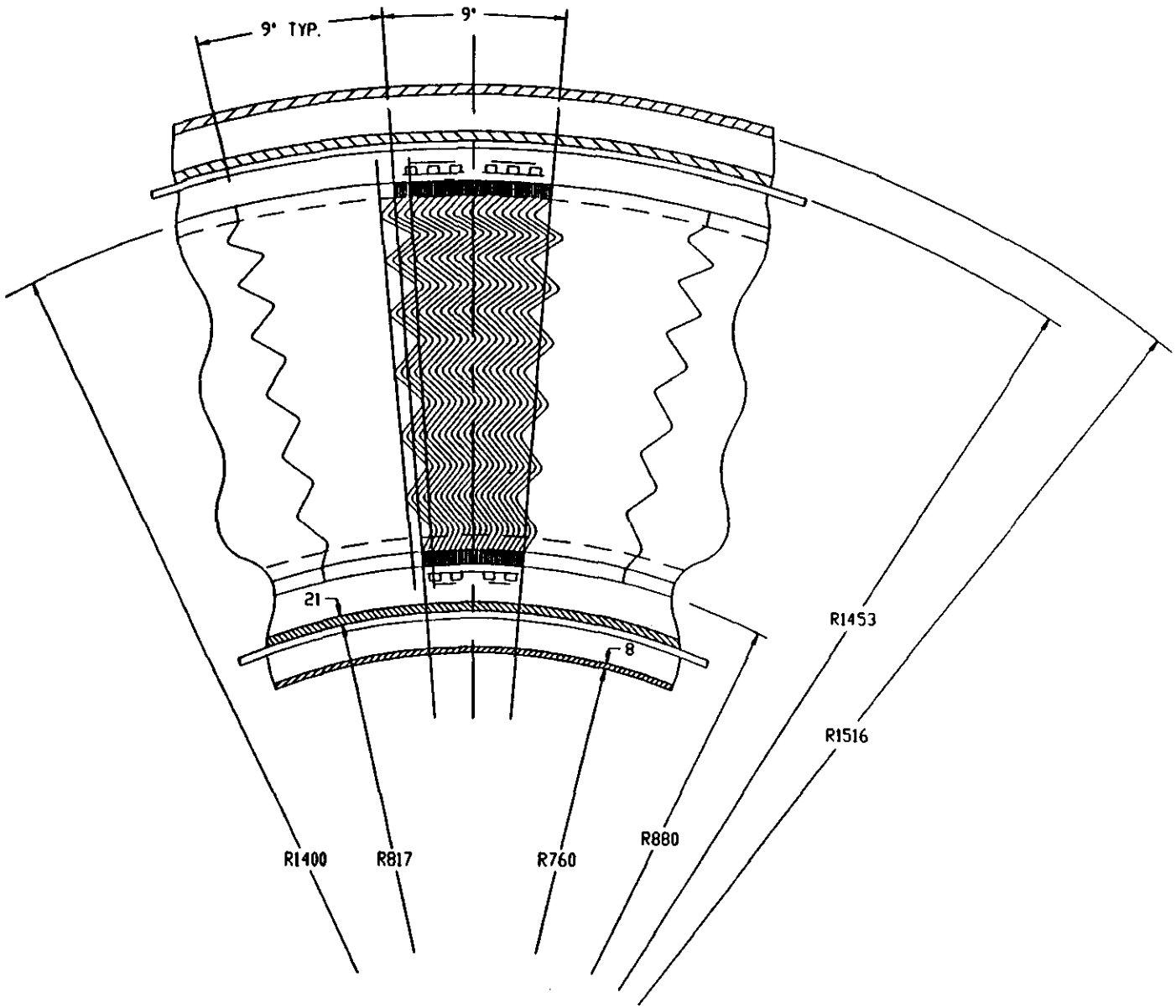

GEN DETECTOR
LIQUID ARGON EM CALORIMETER

MOD2

DO NOT REVISE MANUALLY

EM Accordion Barrel
Tolerancing

Design Parameters

	Absorber	
Modules	Plts/Mod	Plates
40	20	800

Ref. Inner Diameter	1760	mm
Reference Plate Length	4312	mm
Reference Plate Height	520	mm

Scale

0.005	mm	0.00020	in.
0.01	mm	0.00039	in.

DESIGN OPTION ONE

Design to maintain contact between plate spacers (Constant Gap)
Accordion Plates must be compressed to close inner and outer gaps

Plate Components	Nom. Dim. mm	Spac/Plt Tol mm +	mm -	Ref Dia mm	Min Dia mm	Max Dia mm
Inner Row	6.912	0.005	-0.005	1760	1758.73	1761.27
Plates	520	0.1	-0.1		2278.63	2281.37
Outer Row	8.948	0.003	-0.01		2279.39	2276.08
Compression					-0.764	5.293

Structure Calculations			
Spg. Constant	32.97	Kg/cm	Estimated
	184.57	Lb/in	
Plts/In	8.94		
"Pressure"	3437.80	psi/in	

Compress Plates With Rings				
Assume	10	Rings		
Ring Load	58,361	psi		
Outer Rings	Width in	Allow psi	Wall in	Wall cm
	4	50,000	13.09	33.257

Compress Plates with Outer Wall				
		Allow psi	Thick in	Thick cm
	Wall	18800	0.44	1.12

Note: Compression Load must also be contained on inner wall

DESIGN OPTION TWO

Design on Fixed Inner Radius
Allow Gaps between Modules

Module Components	Nom. Dim. mm	Plt Tol. mm -	mm +	Ref Gap mm	Min Gap mm	Max Gap mm
Inner Row Modules	1760	0.000	0.100	0	0.000	2.000
Plate Height	520	-0.100	0.100			
Outer Row Modules	2280	0.000	0.100		0.000	2.000

DESIGN OPTION THREE

Design on Adjusted Inner Radius
Allow Gaps at Outer Radius Between Modules

Module Components	Nom. Dim. mm	Plt Tol. mm -	mm +	Ref Dia mm	Min Gap mm	Max Gap mm
Inner Row Modules	1760	0.000	0.100	1760	0.000	0.000
Plate Height	520	-0.100	0.100			
Outer Row Modules	2280	0.000	0.100		0.000	2.000

DESIGN OPTION FOUR

Design on Adjusted Outer Radius
Allow Gaps at Inner Radius Between Modul

Module Components	Nom. Dim. mm	Plt Tol. mm -	mm +	Ref Gap mm	Min Gap mm	Max Gap mm
Inner Row Modules	1760	0.000	0.100		0.000	2.000
Plate Height	520	-0.100	0.100			
Outer Row Modules	2280	0.000	0.100	0	0.000	0.000

Thermal Contraction of Plates	
Differential Contraction:	0.600 mm
Reduction in Inner Diameter	3.770 mm
Increase in Inner Gaps between Modules	0.0942 mm

DESIGN OPTION SIX

Reference plates on inner stack-up diame
Adjust outer spacer diameter to fit

Module Components	Nom. Dim. mm	Spac/Plt Tol. mm -	mm +	Ref Gap mm	Min Lgh mm	Max Lgh mm
Inner Row Modules	1760	-0.050	0.050	0		
Plate Height	520				507.34	532.66
Outer Row Modules	2280	-0.050	0.050	0		

Thermal Contraction of Plates	
Differential Contraction:	0.600 mm
Reduction in Inner Diameter	3.770 mm
Increase in Inner Gaps between Modules	0.0942 mm

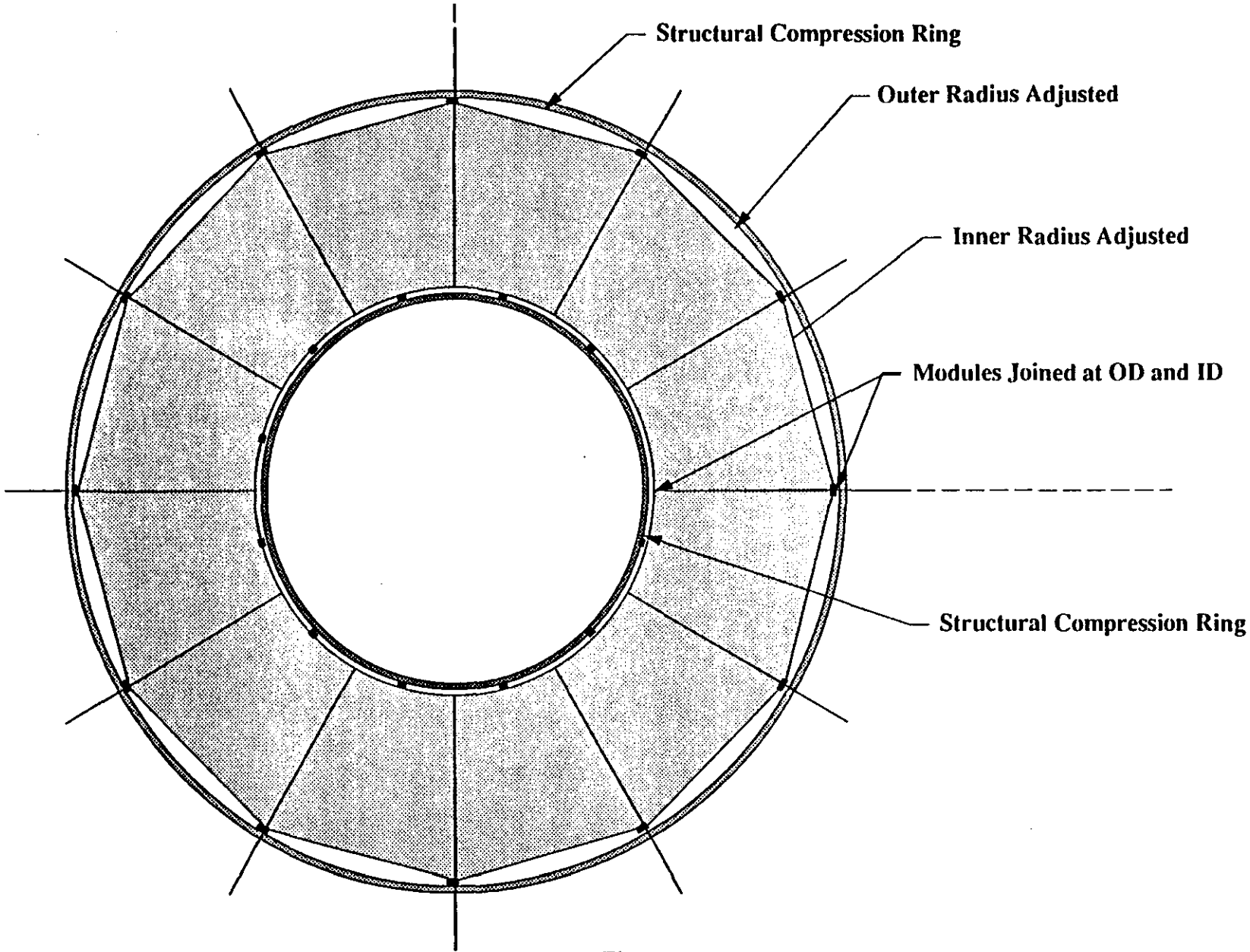

Accordion Module Fit-up
Adjusted Inner and Outer Radii
DESIGN OPTION ONE

G.03.LM.015

ORNL
August 20, 1992

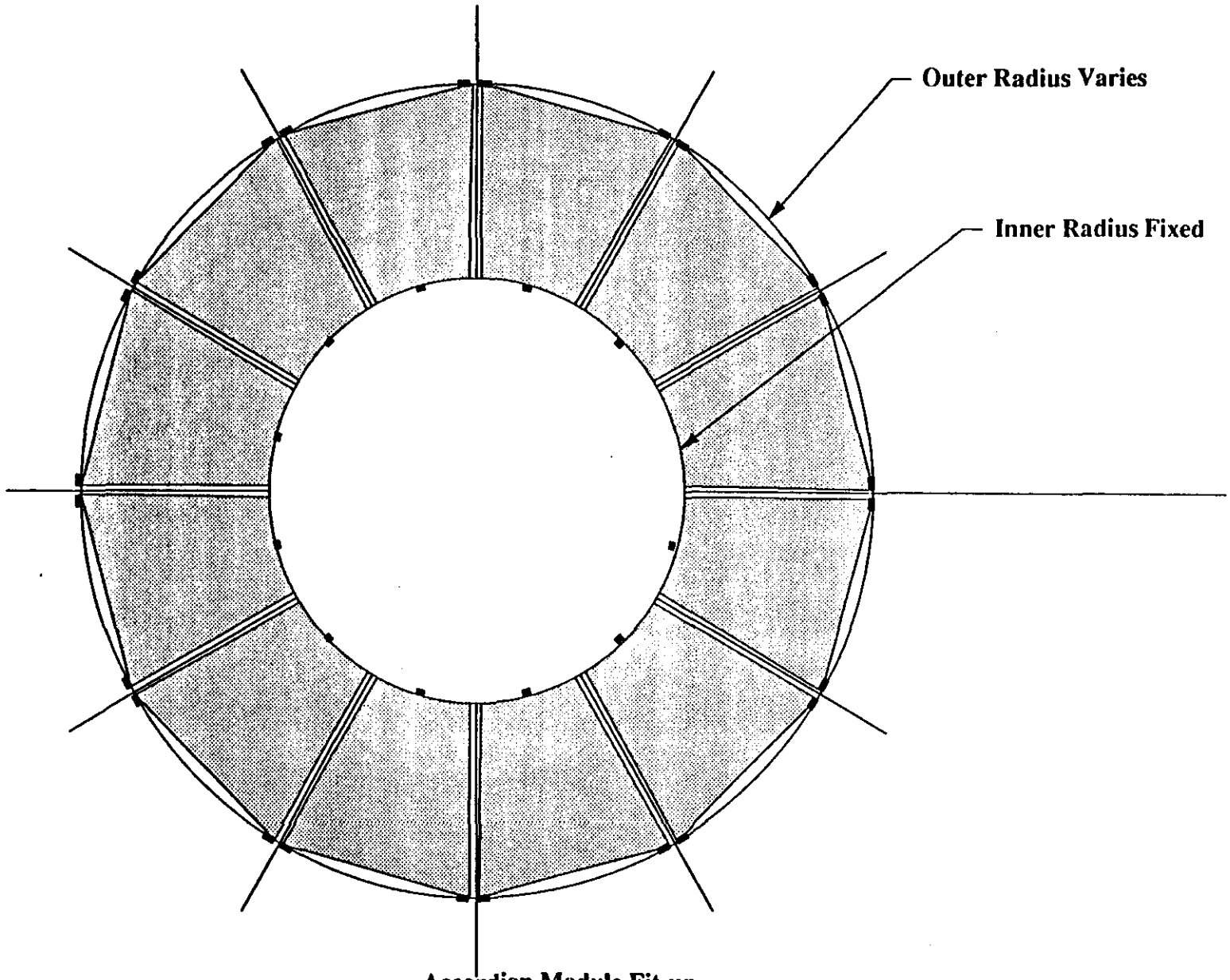

Accordion Module Fit-up
Fixed Inner Radius
DESIGN OPTION TWO

G.03.LM.013

ORNL
August 20, 1992

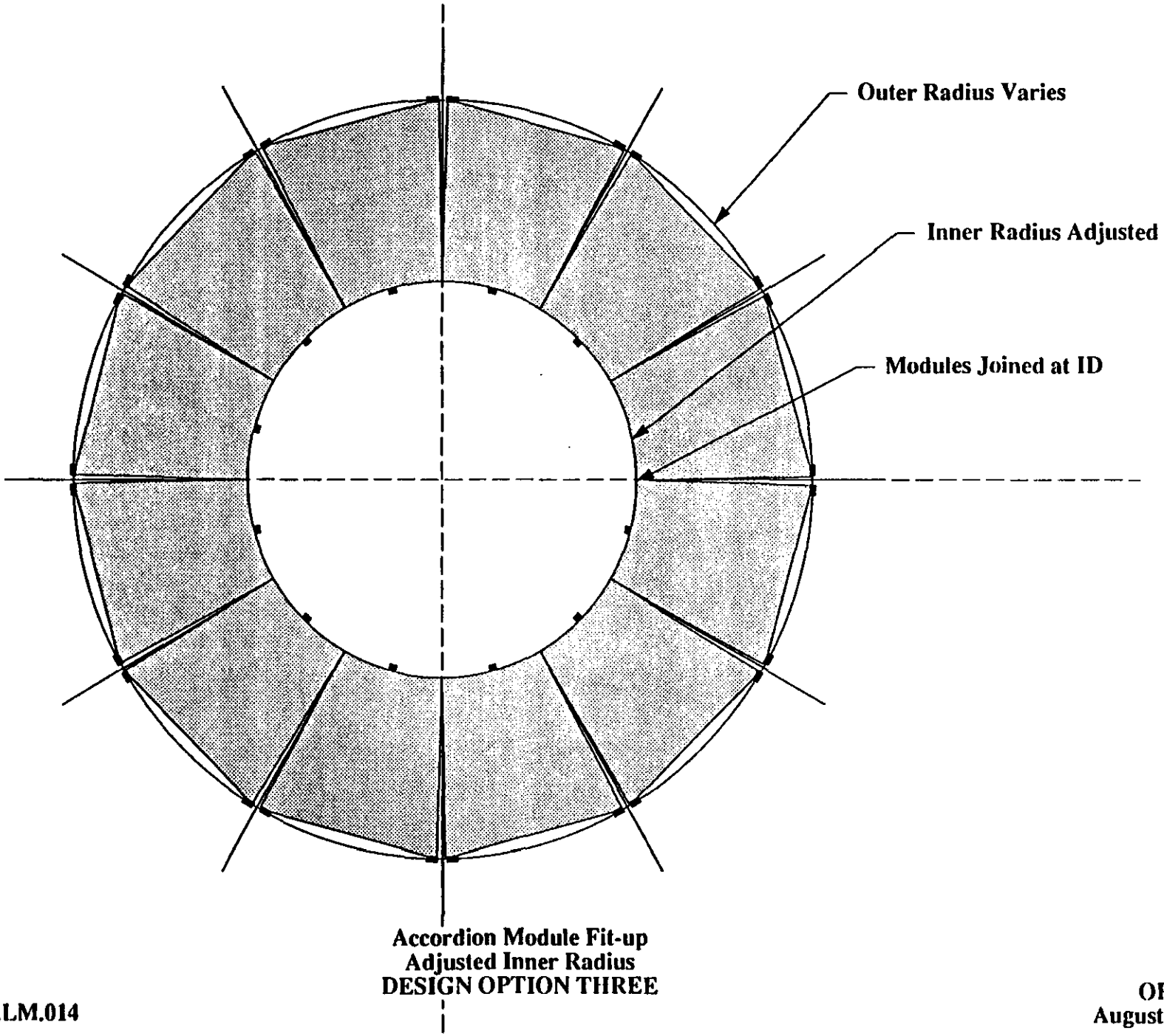

Accordion Module Fit-up
Adjusted Inner Radius
DESIGN OPTION THREE

G.03.LM.014

ORNL
August 20, 1992

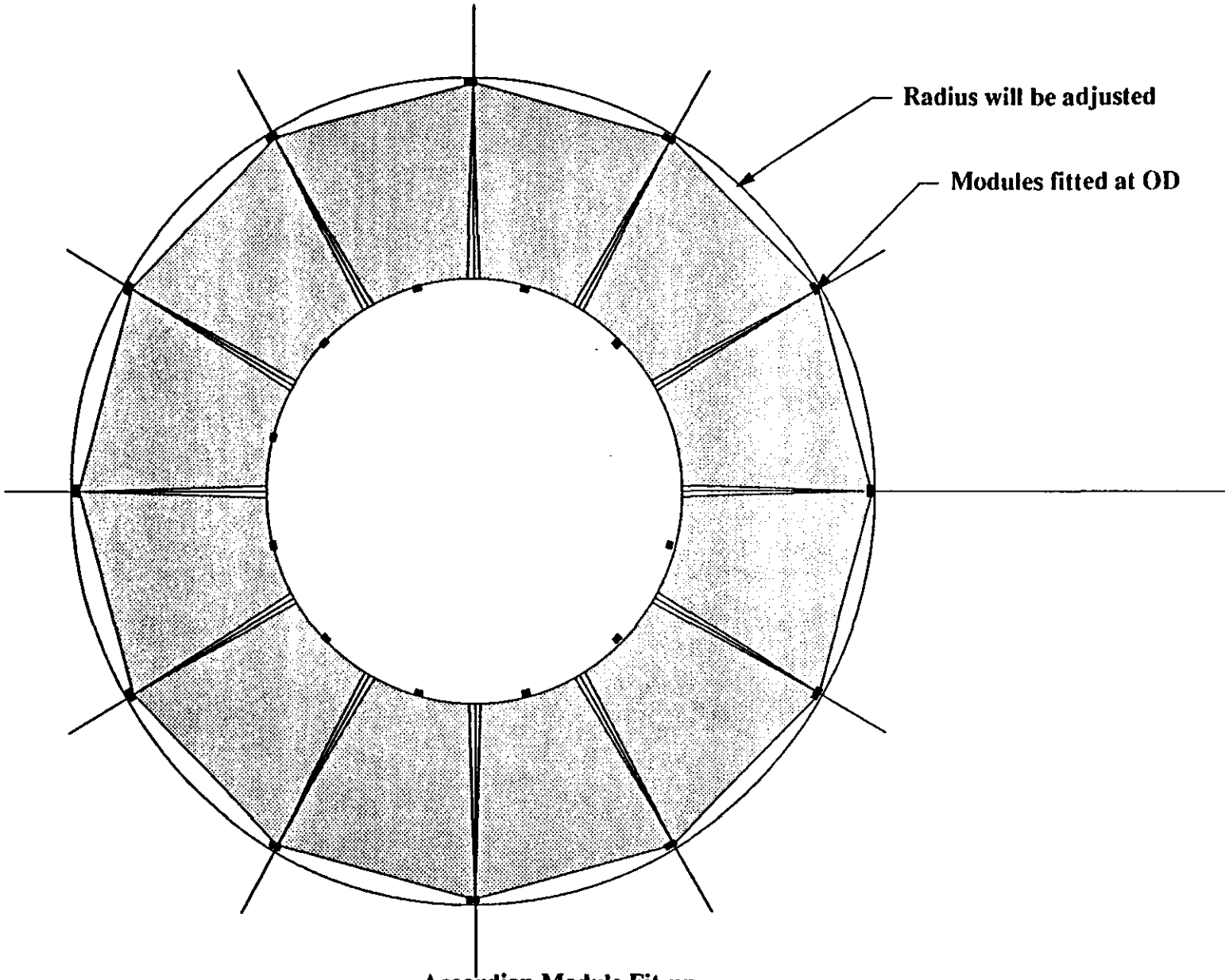

Accordion Module Fit-up
Adjusted Outer Radius
OPTION FOUR

G.03.LM.012

ORNL
August 20, 1992

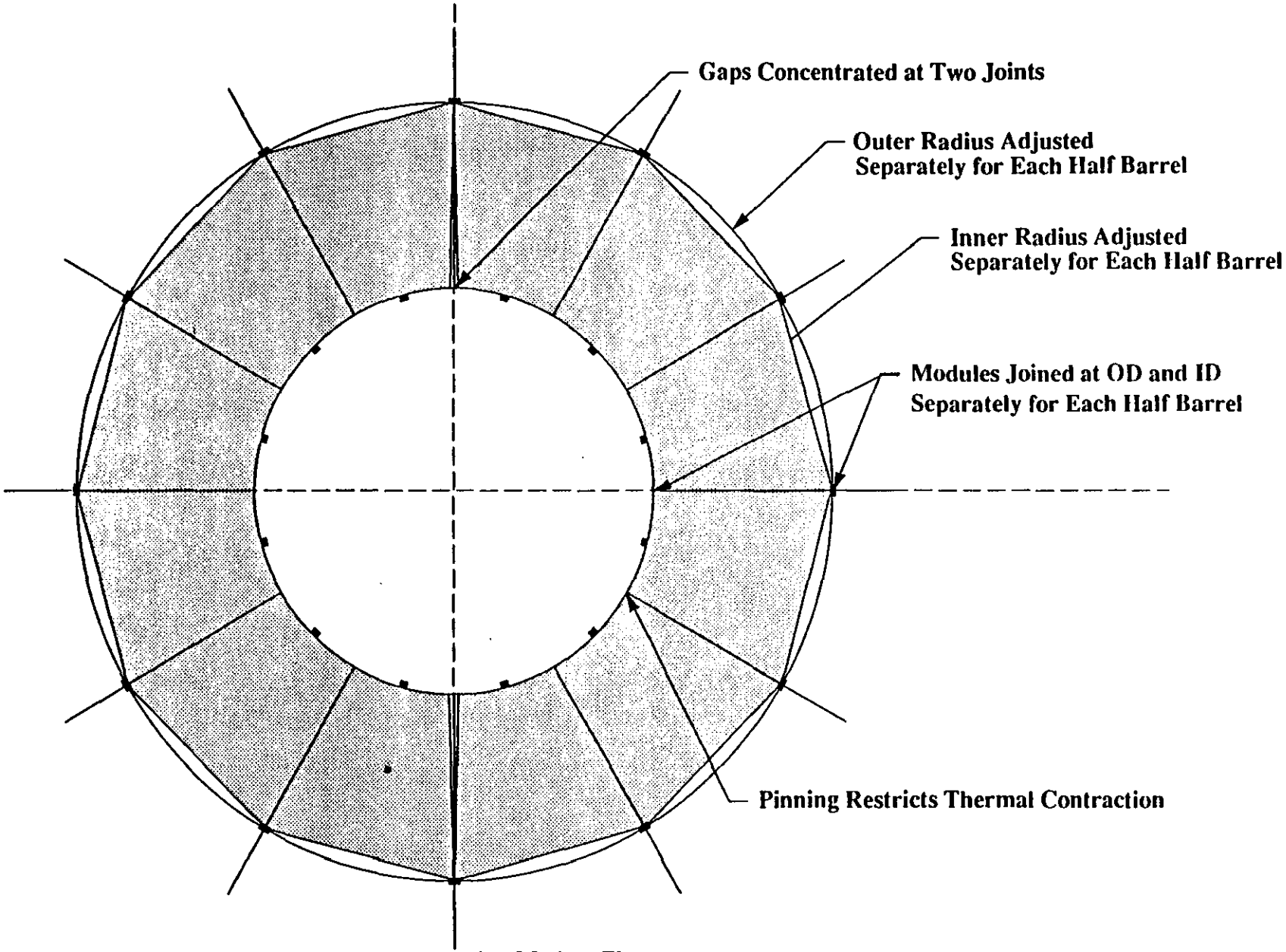

Accordion Module Fit-up
Adjusted Inner and Outer Radii
With Mid-plane gap
DESIGN OPTION FIVE

G.03.LM.016

ORNL
August 21, 1992

9.0 Barrel Accordion Plate Shape

Issues:

a. The accordion plates require tapering to maintain an approximately constant total absorption depth.

b. The feedthroughs require clearance between the two vessels which requires tapering of the accordion plates.

Comments:

9.1 The barrel accordion plates are tapered as shown in Figure M1-1003.

9.2 Analysis is required to fully understand the thermal and structural implications of tapering the barrel plates.

9.3 Taper plates may eliminate the need for having two or more thickness ratios of lead/stainless in the absorber plates.

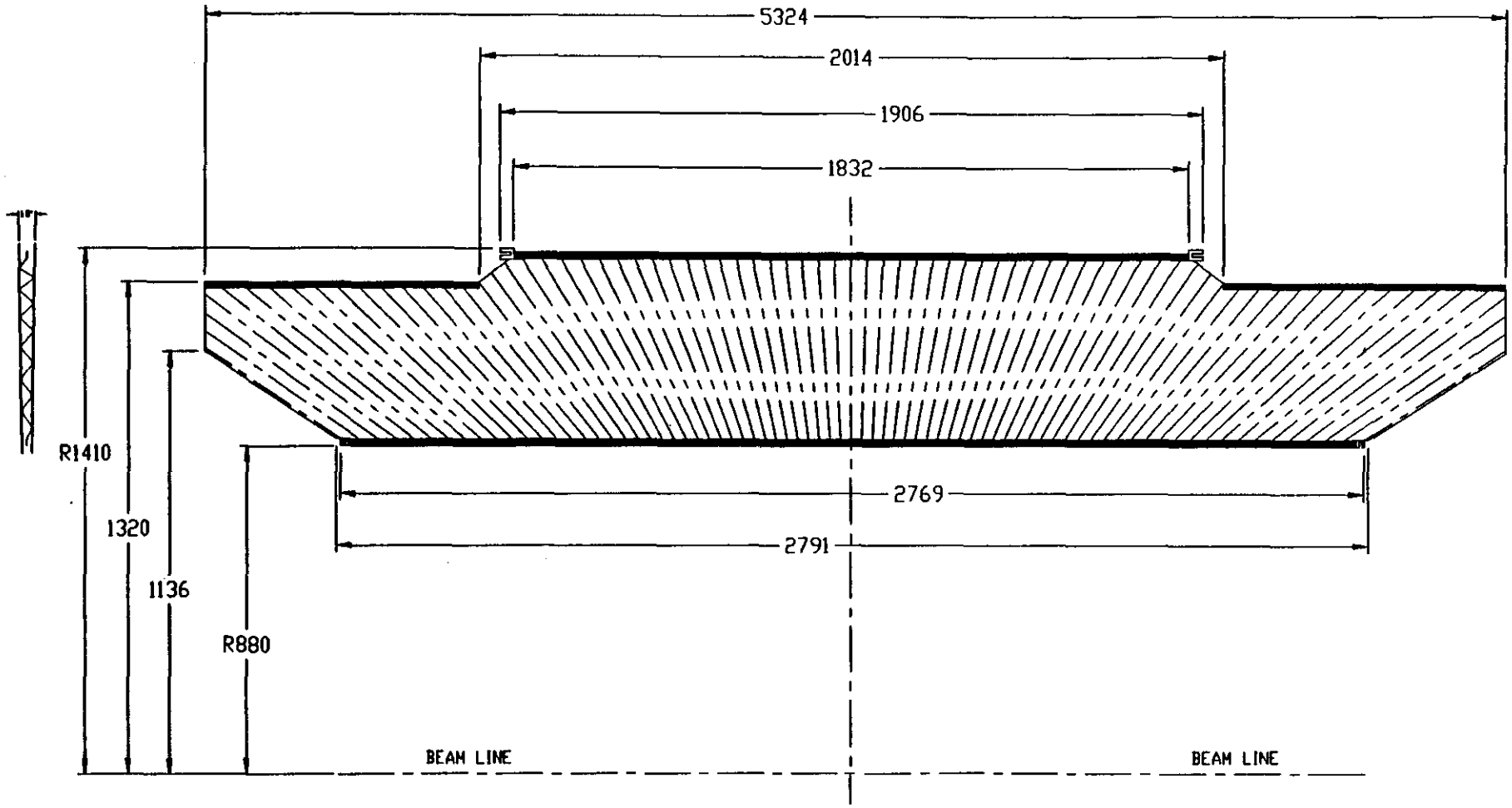

85

GEM DETECTOR
LIQUID ARGON EM CALORIMETER

10.0 Vessel Assembly

Issue: Quality control in the welds will be critical to the success of the noble liquid system because to the difficulty of access to the operating system.

Comments:

10.1 The welds used in the vessels should be designed for X-ray examination. This will reduce the amount of material in the vessels by permitting higher weld efficiency rating for Code calculations.

10.2 The use of large feedthrough rings reduces the amount of welding on the assembly by approximately 80%.

10.3 The structural component of the vessel loading requires the use of reinforcement rings for the attachment of the accordion modules. The rings will have to be incorporated into the wall structure without distortion. A procedure to accomplish this has not been fully realized.

11.0 Beam Testing

Issue: EM calorimeter cannot be moved large distances after assembly to permit off-site beam testing.

Comments:

11.1 Individual modules or small groups of modules will have to be tested.

11.2 Beam testing of individual modules will not accurately measure response at module gaps.

12.0 End Cap Accordion Structure

Issue: Provide for the differential coefficients of thermal expansion in the accordion plates.

Comments:

12.1 Figure P-00yy shows the proposed end cap structure assembly.
The assembly is based on the joining of the plates into an integral assembly which is cradled on both ends on structural rings. The rings are then attached to the liquid barrel at the cold mass support points.

12.2 The back structural ring will have compliance in the x-y plane to account for the difference in z contraction of the inner edge and outer edge plates (approximately 0.5 mm).

12.3 The inner and outer rings will be axially independent to account for the differential thermal contraction of approximately 0.6 mm.

12.4 Because the end cap accordion plates are not arranged in a circle the fit-up and assembly does not add tolerances. Consequently the final assembly of the two modules will be substantially easier than the barrel accordion unit.

12.5 The fabrication of the individual end cap accordion plates will require additional study. Many different sizes and shapes are required. Even though the basic accordion shape is constant as shown if Figure M1-00zz the individual plates will require attachment tabs at different locations. The inclusion of the tabs in the plate forming process is not understood.

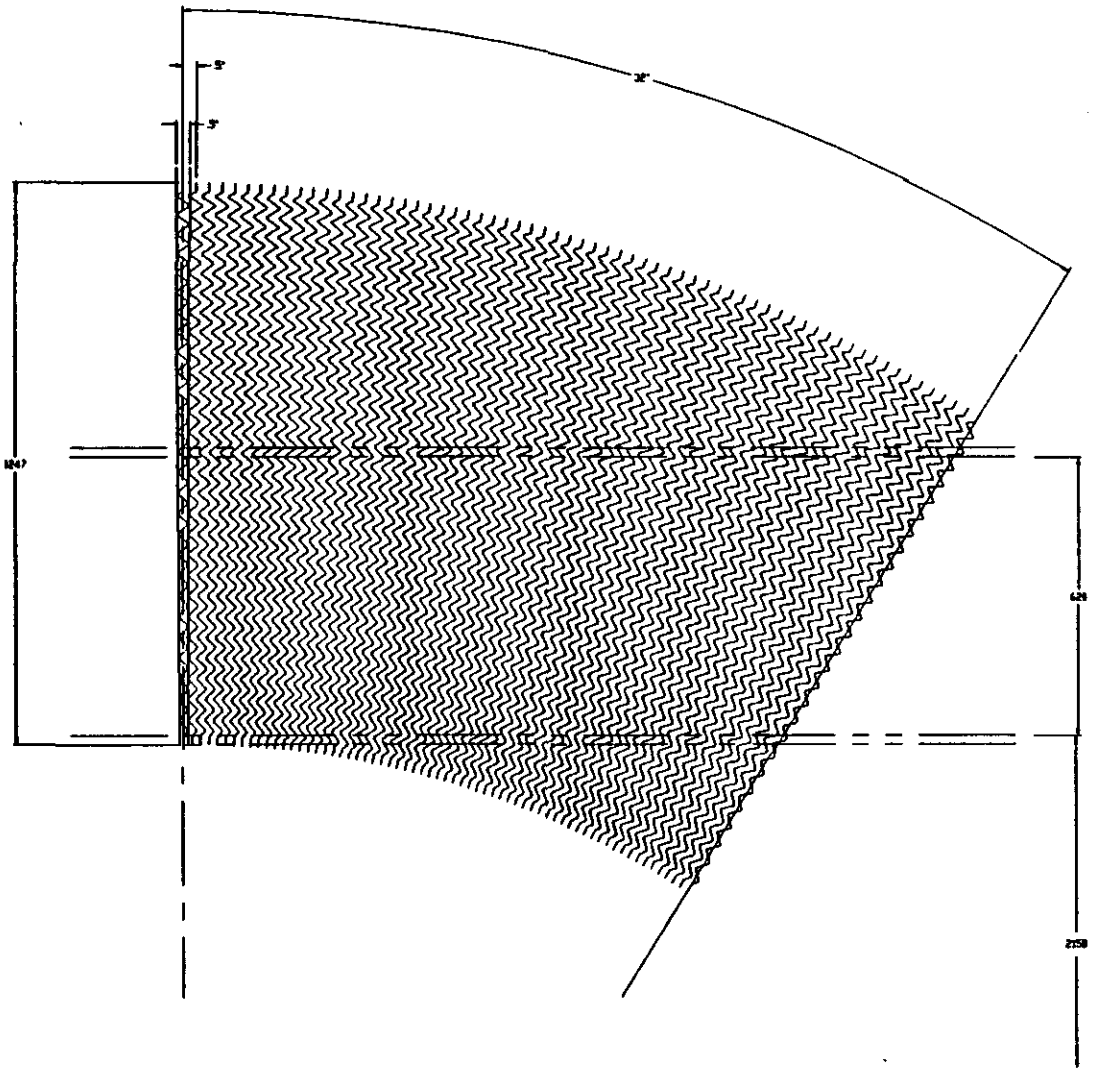

DO NOT REVISE MANUALLY

GEN DETECTOR

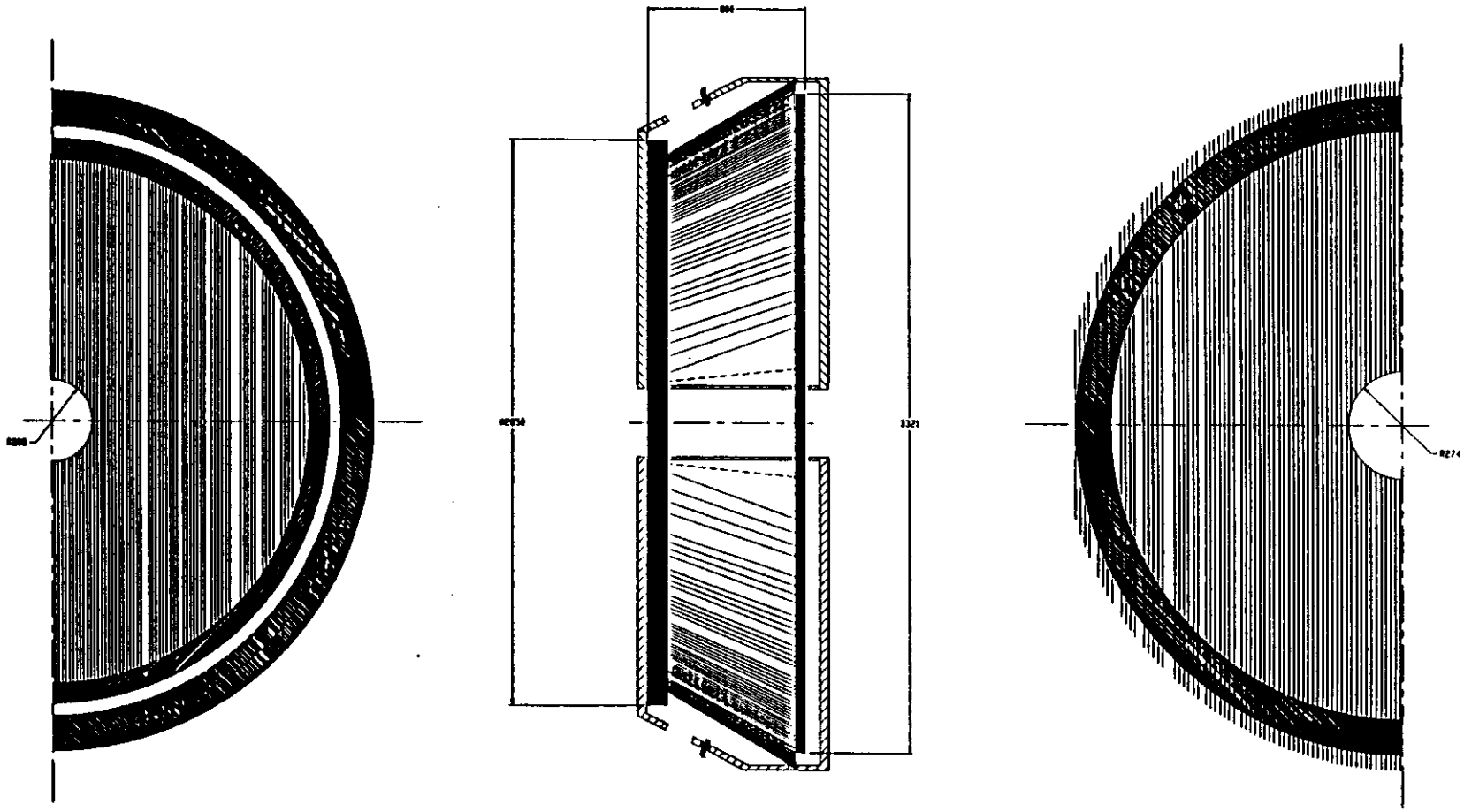

DO NOT REVISE MANUALLY

GEM DETECTOR

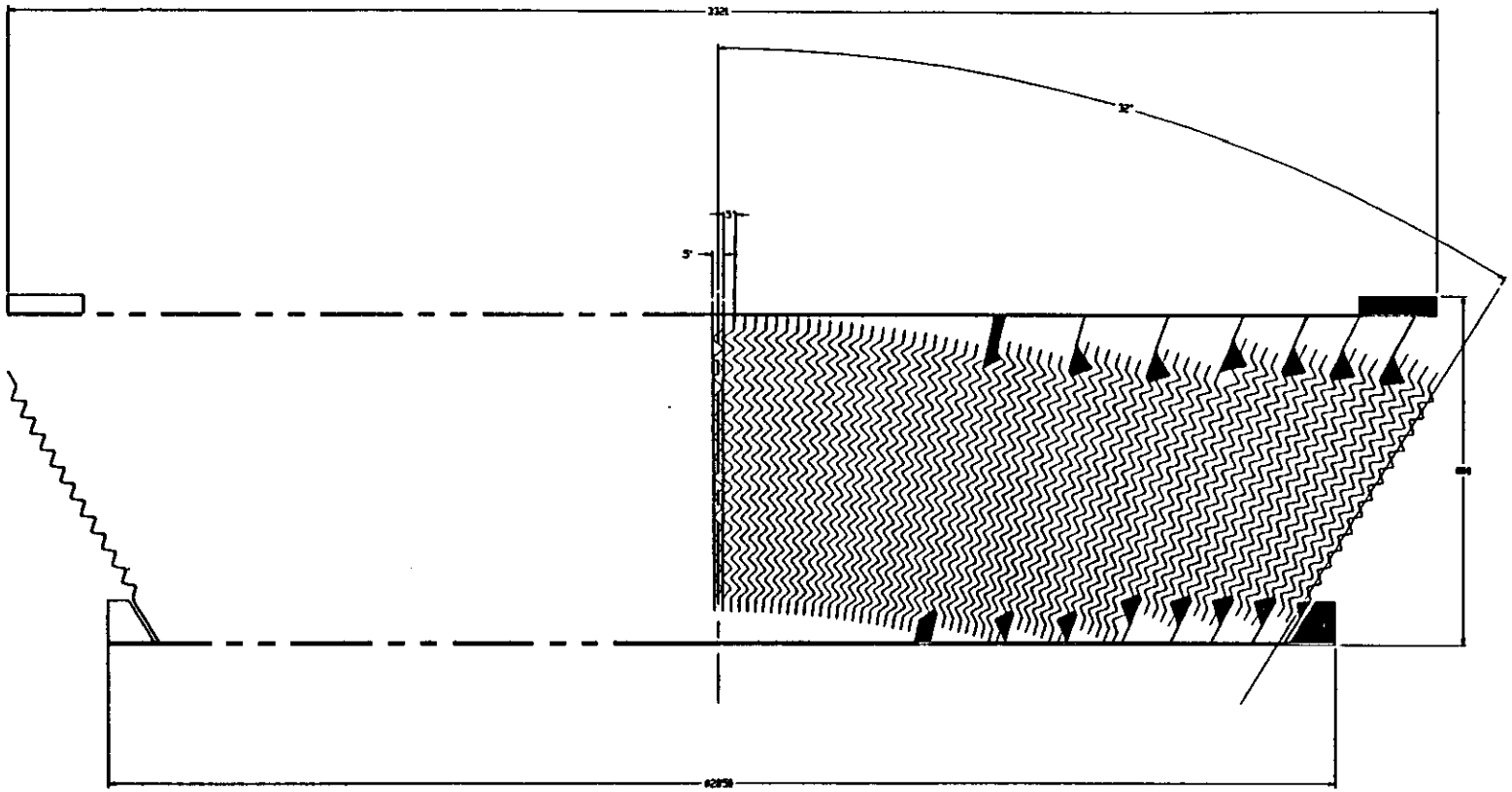

DO NOT REVISE MANUALLY

13.0 Cold Mass Supports

Issue: Providing system support without extending the EM envelope.

Comments:

13.1 The Do design was used in the proposed design. Calculations for the supports are attached.

13.2 The barrel cold mass supports are shown in the attached figure.

13.3 The end cap supports should be significantly smaller than the barrel units due to the lighter weight.

13.4 Cold Mass Supports are made from Inconel; consequently, there will be a substantial amount of material between the EM and Hadron in the areas in which they are located.

Barrel Em Calorimeter Stanchion Support Calculation

Thermal Expansion & Loads

	Stanchions	Dimensions mm	Total Load MTon	Lbs
Barrel	Four Equally Loaded	2076	44	97002.4
	Stanchion Angle	45		

Total Plate Length Calculations

	mm	inch
Station Height	380.00	14.96
Stanchion Thickness	50.00	1.97
Length	200.00	7.87
Length of Each Plate	70.71	2.78
Total Layer Thickness	141.42	5.57
Each Plate (Max) Thickness	10.00	0.39
Each Plate (Min) Thickness	9.00	0.35
No of Plates	14	
Total Length of Plates	1000.00	39.37

	Length mm	Integrated Thermal Expansion Delta L/L	Total Deflection mm	inch
Barrel	2076	0.004	8.304	0.327

Barrel Em Calorimeter Stanchion Support Calculation

INPUT	NAME	OUTPUT	UNIT	COMMENT
44	Pt		MTon	Total Weight of Calorimeter
	Ps	11	MTon	Total Load on Each Stanchion
		24,251	lb	
2.90E+07	E		Psi	Young's Modulus
140,000	Fy		Psi	Yield Stress of Inconel 718
1.20	K			Effective Length Factor for Buckling, AISC ASD P5-135
210.00	dT		degree K	Temperature Difference
14.96	L		in	Height of Column
0.35	t		in	Thickness of Plate
39.37	b		in	Total Length of Plate
	r	0.10	in	Radius of Gyration
	A	13.95	in^2	Total Cross Section Area of Plate
	I	0.15	in^4	Area Moment of Inertia

Structural Strength Calculation (Roark & Young Method)

	Pcr	46,661	lb	Critical Compressive Load (Euler) nwith K=0.25
	Fa	3,345	Psi	Critical Axial Stress
0.327	y		in	Lateral Deflection Due to Thermal Contraction
	W	-4,322	lb	Lateral Load Due to Thermal Contraction
	M	36,295	in-lb	Bending Moment Due to Thermal Contraction
	fa	1,738	Psi	Applied Axial Stress
	fb	44,057	Psi	Applied Beding Stress

Von Mises Failure Criteria

Sp	45,795	Psi	Principal Stress
SF	3.06		Factor of Safety

Allowable Stress Design using AISC ASD Equations

Cc	64		Cc
Kl/r	176		Kl/r
Pcr1	67,624	lb	Critical Compressive Load (AISC) when (Kl/r)>Cc
Fa	4,848	Psi	Critical Axial Stress
Fb	105,000	Psi	Allowable Bending Stress, 0.75*Fy
Fv	56,000	Psi	Allowable Shear Stress, 0.4*Fy
fa	1,738	Psi	Applied Axial Stress
fb	44,057	Psi	Applied Bending Stress

Margin of Safety for Compressive Members

	fa/Fa	0.36	Stress Combination Criteria
0.85	Cm		Compression Member Coefficient, AISC ASD p5-55
	Comb1	0.91	Combined Stress 1 for Axial Compression & Bending, <=1.0
	Comb2	0.44	Combined Stress 2 for Axial Compression & Bending, <=1.0

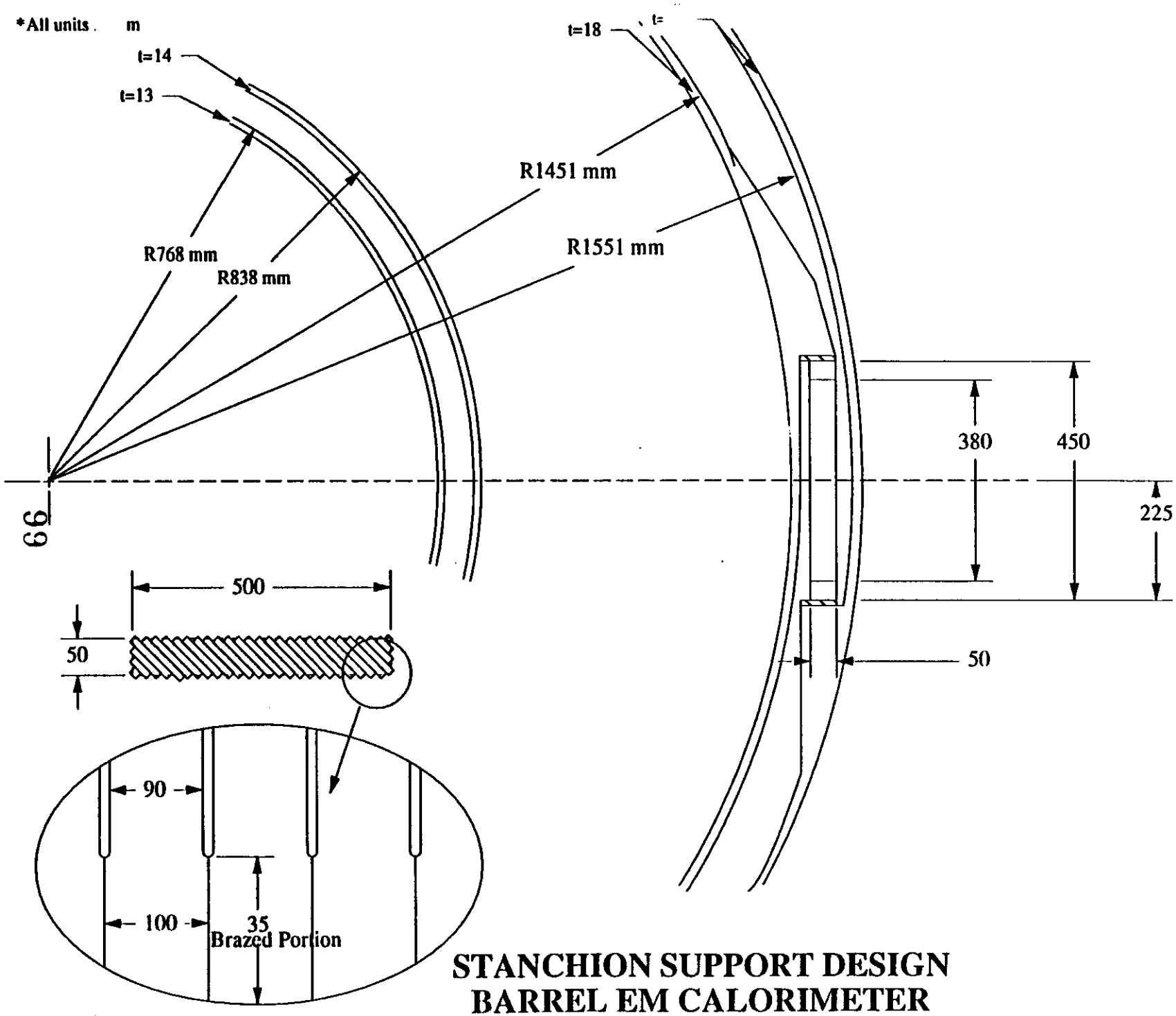

STANCHION SUPPORT DESIGN
BARREL EM CALORIMETER

Stanchion Supprt

SM Chae

14.0 Radiation and Absorption Lengths of EM Calorimeter

Issue: Material in front and back of the active EM calorimeter must be limited for proper calorimeter performance.

Comments:

14.1 Calculations of the material stack-up at three angles (eta= 0.0, 1.2, 3.0) are attached. Three cases are presented:

Case I: No special design features are included to reduce material in front of the EM.

Case 2: Some excluder is included to limit the amount of LKr in front of the EM.

Case 3: Excluders are added to totally eliminate the amount of LKr in front of the EM.

14.2 The amount of Liquid Krypton in front of the barrel accordion is significant, consequently the barrel has been designed to limit the volume.

14.3 Additional material reduction may be achieved by special efforts to make the barrel structure more efficient.

14.4 Full Scale drawings of the inner and outer accordion/vessel arrangements are attached:

a. Figure G.03.LM.0017 (Sht 1 &2) the inner layer arrangement,
b. Figure G.03.LM.0020 outer layer arrangement.

Case One

Liquid Krypton EM Calorimeter Barrel

Eta=0 Stackup Without Excluder

	Segment	Material	Thick. mm	Rad Lgh X/mm	Rad Lgh X	OR mm	Int Lgh L/mm	Int Lgh λ
1.00	**Tracker Radius**	-	710	-	0.200	690		
1.01	Tolerance/Clearance	-	20	-		710		
1.02	Poly/Boron Shield	Poly/Bor	50	0.0024	0.118	760	0.0013	0.0629
2.00	**EM Calorimeter IR**					760		
2.01	Inner Vacuum Vessel Wall	Alum	10	0.0112	0.112	770	0.0025	0.0254
2.02	Insulation	MLI	25	-		795		
2.03	Clearance	-	20	-		815		
2.04	Tolerance	-	4	-		819		
2.05	Inner Argon Vessel Wall	Alum	17	0.0112	0.191	836	0.0025	0.0431
2.06	Excluder	NA	-	-	-	-	-	-
2.07	Ribbon Cable	Poly/Cu	2	0.0103	0.021	821	0.0015	0.0030
2.08	Clearance/Wireway	LKr	28	0.0213	0.597	864	0.0017	0.0473
2.09	Tolerance	LKr	10	0.0213	0.213	874	0.0017	0.0169
2.10	Electronics	G-10	2	0.0088	0.018	876	0.0019	0.0038
2.11	Inner Accordion Support	G-10/SST	20	0.0119	0.238	896	0.0020	0.0396
	Radiation Lengths Before EM				**1.708**			
2.12	***Accordion***	***Laminate***	**480**	**0.0541**	**25.946**	**1376**	**0.0028**	**1.3415**
2.13	Outer Accordion Support	Alum	20	0.0112	0.225	1396	0.0060	0.1200
2.14	Electronics	G-10	2	0.0088	0.018	1398	0.0019	0.0038
2.15	Tolerance	LKr	20	0.0213	0.426	1418	0.0017	0.0338
2.16	Clearance/Wireway	LKr	28	0.0213	0.597	1446	0.0017	0.0473
2.17	Ribbon Cable	Poly/Cu	2	0.0103	0.021	1400	0.0015	0.0030
2.18	Excluder	NA	-	-	-	-	-	-
2.19	Outer Argon Vessel Wall	Alum	13	0.0112	0.146	1459	0.0025	0.0330
2.20	Insulation	MLI	25	-	0.000	1484		
2.21	Clearance	-	20	-		1504		
2.22	Tolerance	-	5	-		1509		
2.23	Outer Vacuum Vessel Wall	Alum	13	0.0112	0.146	1522	0.0025	0.0330
	EM Calorimeter OR					1522		
2.23	Clearance	-	10	-		1532		
2.24	Tolerance	-	20	-		1552		
3.00	**Hadron IR**					1552		
3.01	Inner Fiber Structural Wall	Alum	20	0.0112	0.225	1572	0.0025	0.0508
	Radiation Lengths Between Active EM and Hadron				**1.803**			
	Totals		**1596**		**29.457**			**1.9081**

Case One

Liquid Krypton EM Calorimeter Barrel

Eta=1.2 Stackup

			Projected Dimensions					
	Segment	**Material**	**Thick. mm**	**Rad Lgh X/mm**	**Rad Lgh X**	**OR mm**	**Int Lgh L/mm**	**Int Lgh λ**
1.00	**Tracker Proj. Radius**	-	1285.8	-	0.200	1285.8		
1.01	Tolerance/Clearance	-	36.219	-		1322		
1.02	Poly/Boron Shield	Poly/Bor	90.547	0.0024	0.214	1412.5	0.0013	0.1139
2.00	**EM Cal. Projective IR**					1412.5		
2.01	Inner Vacuum Vessel Wall	Alum	18.109	0.0112	0.203	1430.6	0.0025	0.0460
2.02	Insulation	MLI	45.273	-		1475.9		
2.03	Clearance	-	36.219	-		1512.1		
2.04	Tolerance	-	7.2438	-		1519.4		
2.05	Inner Argon Vessel Wall	Alum	30.786	0.0112	0.346	1550.2	0.0025	0.0781
2.06	Excluder	NA	-	-	-	-	-	-
2.07	Ribbon Cable	Poly/Cu	3.6219	0.0103	0.037	1523	0.0015	0.0054
2.08	Clearance/Wireway	LKr	50.706	0.0213	1.081	1600.9	0.0017	0.0857
2.09	Tolerance	LKr	18.109	0.0213	0.386	1619	0.0017	0.0306
2.10	Electronics	G-10	3.6219	0.0088	0.032	1622.6	0.0019	0.0068
2.11	Inner Accordion Support	G-10/SST	36.219	0.0119	0.431	1658.8	0.0020	0.0718
	Radiation Lengths Before EM				2.930			
2.12	***Accordion Projective***	***Laminate***	**480**	**0.0541**	**25.946**	**2139**	**0.0028**	**1.3415**
2.13	Outer Accordion Support	Alum	36.219	0.0112	0.407	2175	0.0060	0.2173
2.14	Electronics	G-10	3.6219	0.0088	0.032	2178.7	0.0019	0.0068
2.15	Tolerance	LKr	36.219	0.0213	0.772	2214.9	0.0017	0.0612
2.16	Clearance/Wireway	LKr	50.706	0.0213	1.081	2265.6	0.0017	0.0857
2.17	Ribbon Cable	Poly/Cu	3.6219	0.0103	0.037	2182.3	0.0015	0.0054
2.18	Excluder	NA	-	-	-	-	-	-
2.19	Outer Argon Vessel Wall	Alum	23.542	0.0112	0.265	2289.1	0.0025	0.0598
2.20	Insulation	MLI	45.273	-	0.000	2334.4		
2.21	Clearance	-	36.219	-		2370.6		
2.22	Tolerance	-	9.0547	-		2379.7		
2.23	Outer Vacuum Vessel Wall	Alum	23.542	0.0112	0.265	2403.2	0.0025	0.0598
	EM Calorimeter Proj. OR					2403.2		
2.23	Clearance	-	18.109	-		2421.3		
2.24	Tolerance	-	36.219	-		2457.5		
3.00	**Hadron Proj. IR**					2457.5		
3.01	Inner Fiber Structural Wall	Alum	36.219	0.0112	0.407	2493.8	0.0025	0.0919
	Radiation Lengths Between Active EM and Hadron				3.265			
	Totals		**2501**		**32.142**			**2.3676**

Case One

Liquid Argon EM End Cap Calorimeter

Eta=3.0 Stackup

	Segment	Material	Thick. mm	Rad Lgh X/mm	Rad Lgh X	Lenght mm	Int Lgh L/mm	Int Lgh λ
1.00	Tracker Lenght	-	1500	-	0.200	1500		
1.01	Clearance		262					
1.02	Poly/Boron Shield	Poly/Bor	200	0.0024	0.472	1962	0.0013	0.2516
2.00	**EM Calorimeter Front**					1962		
2.01	Front Vacuum Vessel Wall	Alum	25	0.0112	0.281	1987	0.0025	0.0635
2.02	Insulation	MLI	25	-		2012		
2.03	Clearance	-	30	-		2042		
2.04	Tolerance	-	5	-		2047		
2.05	Front Argon Vessel Wall	Alum	46	0.0112	0.517	2093	0.0025	0.1168
2.06	Excluder	NA	-	-	-	-	-	-
2.07	Ribbon Cable	Poly/Cu	2	0.0103	0.021	2049	0.0015	0.0030
2.08	Clearance/Wireway	LAr	28	0.0071	0.200	2121	0.0012	0.0335
2.09	Tolerance	LAr	10	0.0071	0.071	2131	0.0012	0.0119
2.10	Electronics	G-10	2	0.0088	0.018	2133	0.0019	0.0038
2.11	Inner Accordion Support	G-10/SST	20	0.0119	0.238	2153	0.0020	0.0396
	Radiation Lengths Before EM				**2.017**			
2.12	***Accordion***	***Laminate***	**620**	**0.0453**	**28.086**	**2773**	**0.0025**	**1.5500**
2.13	Outer Accordion Support	Alum	20	0.0112	0.225	2793	0.0060	0.1200
2.14	Electronics	G-10	2	0.0088	0.018	2795	0.0019	0.0038
2.15	Tolerance	LAr	20	0.0071	0.143	2815	0.0012	0.0239
2.16	Clearance/Wireway	LAr	28	0.0071	0.200	2843	0.0012	0.0335
2.17	Ribbon Cable	Poly/Cu	2	0.0103	0.021	2797	0.0015	0.0030
2.18	Excluder	NA	-	-	-	-	-	-
2.19	Back Argon Vessel Wall	Alum	46	0.0112	0.517	2889	0.0025	0.1168
2.20	Insulation	MLI	25	-	0.000	2914		
2.21	Clearance	-	50	-		2964		
2.22	Tolerance	-	5	-		2969		
2.23	Back Vacuum Vessel Wall	Alum	35	0.0112	0.393	3004	0.0025	0.0888
	EM Calorimeter Back					3004		
2.23	Clearance	-	10	-		3014		
2.24	Tolerance	-	20	-		3024		
3.00	**Front of Hadron**					3024		
3.01	Inner Fiber Structural Wall	Alum	20	0.0112	0.225	3044	0.0025	0.0508
	Radiation Lengths Between Active EM and Hadron				**1.741**			
	Totals		**3058**		**31.844**			**2.5140**

Case Two

Noble Liquid EM Calorimeter

Eta=0 Stackup With Liquid Krypton Excluder

	Segment	Material	Thick. mm	Rad Lgh X/mm	Rad Lgh X	OR mm	Int Lgh L/mm	Int Lgh λ
1.00	**Tracker Radius**	-	710	-	0.200	690		
1.01	Tolerance/Clearance	-	20	-		710		
1.02	Poly/Boron Shield	Poly/Bor	20	0.0024	0.047	730	0.0013	0.0252
2.00	**EM Calorimeter IR**					730		
2.01	Inner Vacuum Vessel Wall	Alum	10	0.0112	0.112	740	0.0025	0.0254
2.02	Insulation	MLI	25	-		765		
2.03	Clearance	-	20	-		785		
2.04	Tolerance	-	4	-		789		
2.05	Inner Argon Vessel Wall	Alum	17	0.0112	0.191	806	0.0025	0.0431
2.06	Poly/Boron Excluder	Poly/Bor	20	0.0024	0.047	826	0.0013	0.0252
2.07	Ribbon Cable	Poly/Cu	2	0.0103	0.021	791	0.0015	0.0030
2.08	Clearance/Wireway	LKr	6	0.0213	0.128	812	0.0017	0.0101
2.09	Tolerance	LKr	10	0.0213	0.213	822	0.0017	0.0169
2.10	Electronics/Cabling	G-10	2	0.0088	0.018	824	0.0019	0.0038
2.11	Inner Accordion Support	G-10/SST	20	0.0119	0.238	844	0.0020	0.0396
	Radiation Lengths Before EM				1.215			
2.12	***Accordion***	***Laminate***	**480**	**0.0541**	**25.946**	**1324**	**0.0028**	**1.3415**
2.13	Outer Accordion Support	Alum	20	0.0112	0.225	1344	0.0060	0.1200
2.14	Electronics	G-10	2	0.0088	0.018	1346	0.0019	0.0038
2.15	Tolerance	LKr	10	0.0213	0.213	1356	0.0017	0.0169
2.16	Clearance/Wireway	LKr	10	0.0213	0.213	1366	0.0017	0.0169
2.17	Ribbon Cable	Poly/Cu	2	0.0103	0.021	1348	0.0015	0.0030
2.18	Poly/Boron Excluder	Poly/Bor	28	0.0024	0.066	1394	0.0013	0.0352
2.19	Outer Argon Vessel Wall	Alum	13	0.0112	0.146	1379	0.0025	0.0330
2.20	Insulation	MLI	25	-	0.000	1404		
2.21	Clearance	-	20	-		1424		
2.22	Tolerance	-	5	-		1429		
2.23	Outer Vacuum Vessel Wall	Alum	13	0.0112	0.146	1442	0.0025	0.0330
	EM Calorimeter OR					1442		
2.23	Clearance	-	10	-		1452		
2.24	Tolerance	-	20	-		1472		
3.00	**Hadron IR**					1472		
3.01	Inner Fiber Structural Wall	Alum	20	0.0112	0.225	1492	0.0025	0.0508
	Radiation Lengths Between Active EM and Hadron				1.272			
	Totals		**1564**		**28.433**			**1.8463**

Case Two

Liquid Krypton EM Calorimeter Barrel

Eta=1.2 Stackup With Excluder

			Projected Dimensions					
	Segment	Material	Thick. mm	Rad Lgh X/mm	Rad Lgh X	OR mm	Int Lgh L/mm	Int Lgh λ
1.00	**Tracker Proj. Radius**	-	1285.8	-	0.200	1285.8		
1.01	Tolerance/Clearance	-	36.219	-		1322		
1.02	Poly/Boron Shield	Poly/Bor	36.219	0.0024	0.085	1358.2	0.0013	0.0456
2.00	**EM Cal. Projective IR**					1358.2		
2.01	Inner Vacuum Vessel Wall	Alum	18.109	0.0112	0.203	1376.3	0.0025	0.0460
2.02	Insulation	MLI	45.273	-		1421.6		
2.03	Clearance	-	36.219	-		1457.8		
2.04	Tolerance	-	7.2438	-		1465		
2.05	Inner Argon Vessel Wall	Alum	30.786	0.0112	0.346	1495.8	0.0025	0.0781
2.06	Poly/Boron Excluder	Poly/Bor	36.219	0.0024	0.085	1532.1	0.0013	0.0456
2.07	Ribbon Cable	Poly/Cu	3.6219	0.0103	0.037	1468.7	0.0015	0.0054
2.08	Clearance/Wireway	LKr	10.866	0.0213	0.232	1506.7	0.0017	0.0184
2.09	Tolerance	LKr	18.109	0.0213	0.386	1524.8	0.0017	0.0306
2.10	Electronics	G-10	3.6219	0.0088	0.032	1528.4	0.0019	0.0068
2.11	Inner Accordion Support	G-10/SST	36.219	0.0119	0.431	1564.7	0.0020	0.0718
	Radiation Lengths Before EM				2.038			
2.12	***Accordion Projective***	***Laminate***	**480**	**0.0541**	**25.946**	**2045**	**0.0028**	**1.3415**
2.13	Outer Accordion Support	Alum	36.219	0.0112	0.407	2080.9	0.0060	0.2173
2.14	Electronics	G-10	3.6219	0.0088	0.032	2084.5	0.0019	0.0068
2.15	Tolerance	LKr	18.109	0.0213	0.386	2102.6	0.0017	0.0306
2.16	Clearance/Wireway	LKr	18.109	0.0213	0.386	2120.7	0.0017	0.0306
2.17	Ribbon Cable	Poly/Cu	3.6219	0.0103	0.037	2088.1	0.0015	0.0054
2.18	Poly/Boron Excluder	Poly/Bor	50.706	0.0024	0.120	2171.4	0.0013	0.0638
2.19	Outer Argon Vessel Wall	Alum	23.542	0.0112	0.265	2144.3	0.0025	0.0598
2.20	Insulation	MLI	45.273	-	0.000	2189.5		
2.21	Clearance	-	36.219	-		2225.7		
2.22	Tolerance	-	9.0547	-		2234.8		
2.23	Outer Vacuum Vessel Wall	Alum	23.542	0.0112	0.265	2258.3	0.0025	0.0598
	EM Calorimeter Proj. OR					2258.3		
2.23	Clearance	-	18.109	-		2276.5		
2.24	Tolerance	-	36.219	-		2312.7		
3.00	**Hadron Proj. IR**					2312.7		
3.01	Inner Fiber Structural Wall	Alum	36.219	0.0112	0.407	2348.9	0.0025	0.0919
	Radiation Lengths Between Active EM and Hadron				2.304			
	Totals		**2443.1**		**30.288**			**2.2557**

Case Three

Noble Liquid EM Calorimeter

Eta=0 Stackup With 100% Liquid Krypton Excluder

	Segment	Material	Thick. mm	Rad Lgh X/mm	Rad Lgh X	OR mm	Int Lgh L/mm	Int Lgh λ
1.00	**Tracker Radius**	-		-	0.200	690		
1.01	Tolerance/Clearance	-	20	-		710		
1.02	Poly/Boron Shield	Poly/Bor	0	0.0024	0.000	710	0.0013	0.0000
2.00	**EM Calorimeter IR**					710		
2.01	Inner Vacuum Vessel Wall	Alum	10	0.0112	0.112	720	0.0025	0.0254
2.02	Insulation	MLI	25	-		745		
2.03	Clearance	-	20	-		765		
2.04	Tolerance	-	10	-		775		
2.05	Inner Argon Vessel Wall	Alum	17	0.0112	0.191	792	0.0025	0.0431
2.06	Poly/Boron Excluder	Poly/Bor	48	0.0024	0.113	840	0.0013	0.0604
2.07	Ribbon Cable	Poly/Cu	2	0.0103	0.021	777	0.0015	0.0030
2.08	Clearance/Wireway	LKr	0	0.0213	0.000	792	0.0017	0.0000
2.09	Tolerance	LKr	0	0.0213	0.000	792	0.0017	0.0000
2.10	Electronics/Cabling	G-10	2	0.0088	0.018	794	0.0019	0.0038
2.11	Inner Accordion Support	G-10/SST	20	0.0119	0.238	814	0.0020	0.0396
	Radiation Lengths Before EM				0.893			
2.12	***Accordion***	***Laminate***	**480**	**0.0541**	**25.946**	**1294**	**0.0028**	**1.3415**
2.13	Outer Accordion Support	Alum	20	0.0112	0.225	1314	0.0060	0.1200
2.14	Electronics	G-10	2	0.0088	0.018	1316	0.0019	0.0038
2.15	Tolerance	LKr	0	0.0213	0.000	1316	0.0017	0.0000
2.16	Clearance/Wireway	LKr	0	0.0213	0.000	1316	0.0017	0.0000
2.17	Ribbon Cable	Poly/Cu	2	0.0103	0.021	1318	0.0015	0.0030
2.18	Poly/Boron Excluder	Poly/Bor	60	0.0024	0.142	1376	0.0013	0.0755
2.19	Outer Argon Vessel Wall	Alum	13	0.0112	0.146	1329	0.0025	0.0330
2.20	Insulation	MLI	25	-	0.000	1354		
2.21	Clearance	-	20	-		1374		
2.22	Tolerance	-	5	-		1379		
2.23	Outer Vacuum Vessel Wall	Alum	13	0.0112	0.146	1392	0.0025	0.0330
	EM Calorimeter OR					1392		
2.23	Clearance	-	10	-		1402		
2.24	Tolerance	-	20	-		1422		
3.00	**Hadron IR**					1422		
3.01	Inner Fiber Structural Wall	Alum	20	0.0112	0.225	1442	0.0025	0.0508
	Radiation Lengths Between Active EM and Hadron				0.921			
	Totals		**864**		**27.760**			**1.8358**

Case Three

Liquid Krypton EM Calorimeter Barrel

Eta=1.2 Stackup With 100% Excluder

			Projected Dimensions					
	Segment	Material	Thick. mm	Rad Lgh X/mm	Rad Lgh X	OR mm	Int Lgh L/mm	Int Lgh λ
1.00	**Tracker Proj. Radius**	-	0	-	0.200	0		
1.01	Tolerance/Clearance	-	36.219	-		36.219		
1.02	Poly/Boron Shield	Poly/Bor	0	0.0024	0.000	36.219	0.0013	0.0000
2.00	**EM Cal. Projective IR**					36.219		
2.01	Inner Vacuum Vessel Wall	Alum	18.109	0.0112	0.203	54.328	0.0025	0.0460
2.02	Insulation	MLI	45.273	-		99.602		
2.03	Clearance	-	36.219	-		135.82		
2.04	Tolerance	-	18.109	-		153.93		
2.05	Inner Argon Vessel Wall	Alum	30.786	0.0112	0.346	184.72	0.0025	0.0781
2.06	Poly/Boron Excluder	Poly/Bor	86.925	0.0024	0.205	271.64	0.0013	0.1093
2.07	Ribbon Cable	Poly/Cu	3.6219	0.0103	0.037	157.55	0.0015	0.0054
2.08	Clearance/Wireway	LKr	0	0.0213	0.000	184.72	0.0017	0.0000
2.09	Tolerance	LKr	0	0.0213	0.000	184.72	0.0017	0.0000
2.10	Electronics	G-10	3.6219	0.0088	0.032	188.34	0.0019	0.0068
2.11	Inner Accordion Support	G-10/SST	36.219	0.0119	0.431	224.56	0.0020	0.0718
	Radiation Lengths Before EM				1.455			
2.12	***Accordion Projective***	***Laminate***	**480**	**0.0541**	**25.946**	**704.6**	**0.0028**	**1.3415**
2.13	Outer Accordion Support	Alum	36.219	0.0112	0.407	740.78	0.0060	0.2173
2.14	Electronics	G-10	3.6219	0.0088	0.032	744.4	0.0019	0.0068
2.15	Tolerance	LKr	0	0.0213	0.000	744.4	0.0017	0.0000
2.16	Clearance/Wireway	LKr	0	0.0213	0.000	744.4	0.0017	0.0000
2.17	Ribbon Cable	Poly/Cu	3.6219	0.0103	0.037	748.02	0.0015	0.0054
2.18	Poly/Boron Excluder	Poly/Bor	108.66	0.0024	0.256	853.05	0.0013	0.1367
2.19	Outer Argon Vessel Wall	Alum	23.542	0.0112	0.265	767.94	0.0025	0.0598
2.20	Insulation	MLI	45.273	-	0.000	813.21		
2.21	Clearance	-	36.219	-		849.43		
2.22	Tolerance	-	9.0547	-		858.49		
2.23	Outer Vacuum Vessel Wall	Alum	23.542	0.0112	0.265	882.03	0.0025	0.0598
	EM Calorimeter Proj. OR					882.03		
2.23	Clearance	-	18.109	-		900.14		
2.24	Tolerance	-	36.219	-		936.36		
3.00	**Hadron Proj. IR**					936.36		
3.01	Inner Fiber Structural Wall	Alum	36.219	0.0112	0.407	972.58	0.0025	0.0919
	Radiation Lengths Between Active EM and Hadron				1.668			
	Totals		**1175.4**		**29.069**			**2.2367**

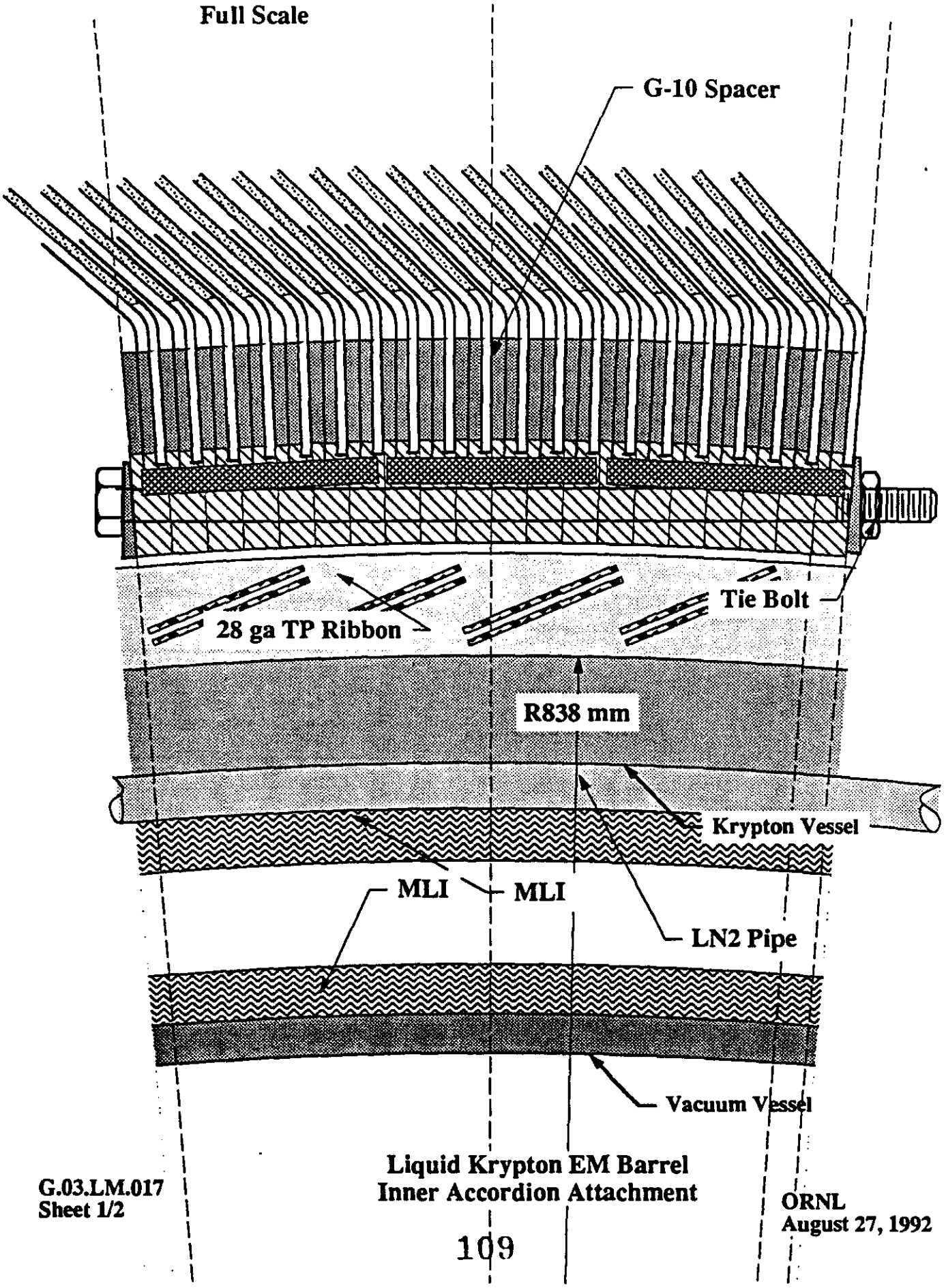

G.03.LM.017
Sheet 1/2

Liquid Krypton EM Barrel
Inner Accordion Attachment

ORNL
August 27, 1992

Full Scale

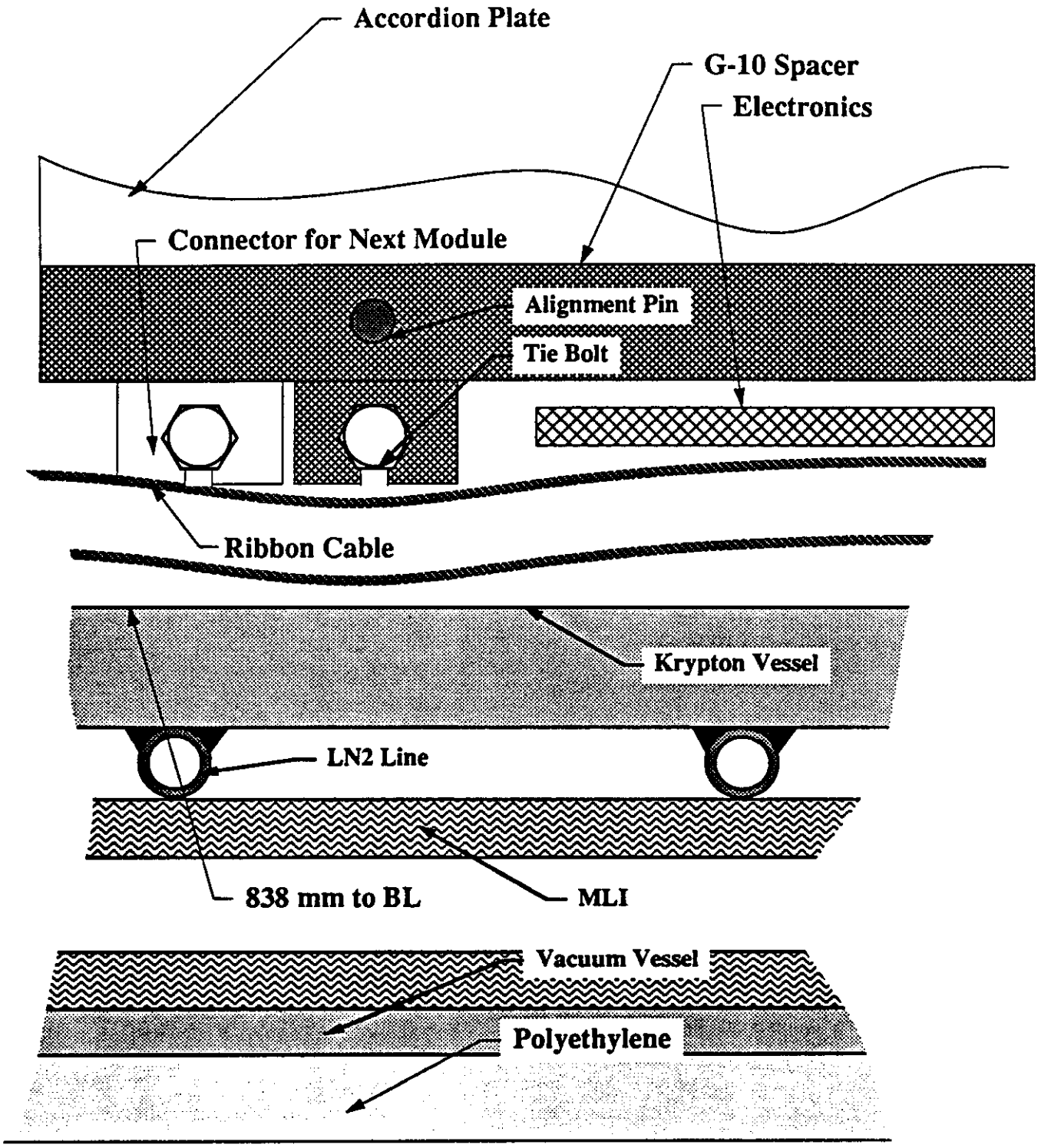

G.03.LM.017
Sheet 1/2

Liquid Krypton EM Barrel
Inner Accordion Attachment

ORNL
August 27, 1992

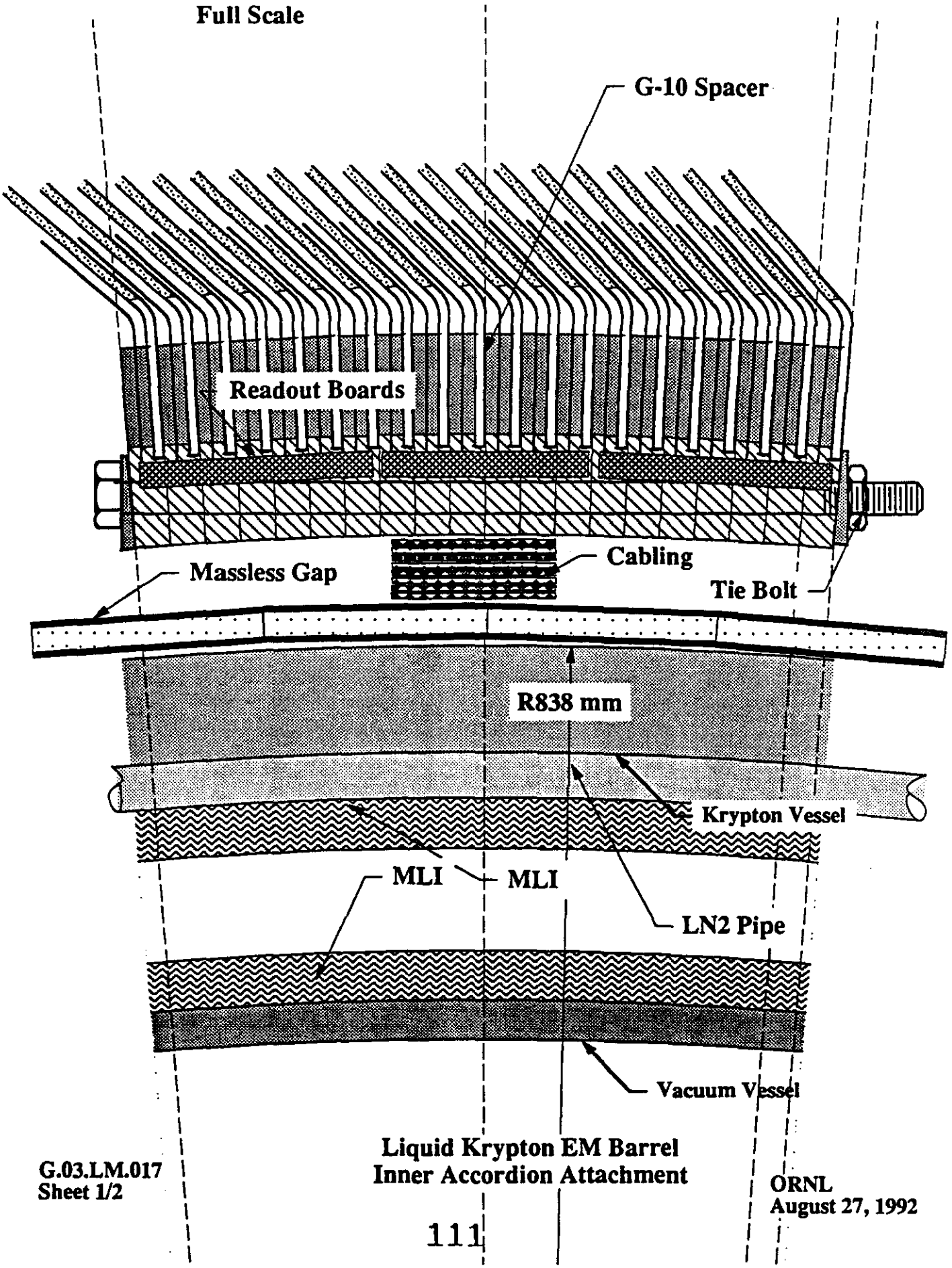

G.03.LM.017
Sheet 1/2

Liquid Krypton EM Barrel
Inner Accordion Attachment

ORNL
August 27, 1992

Full Scale

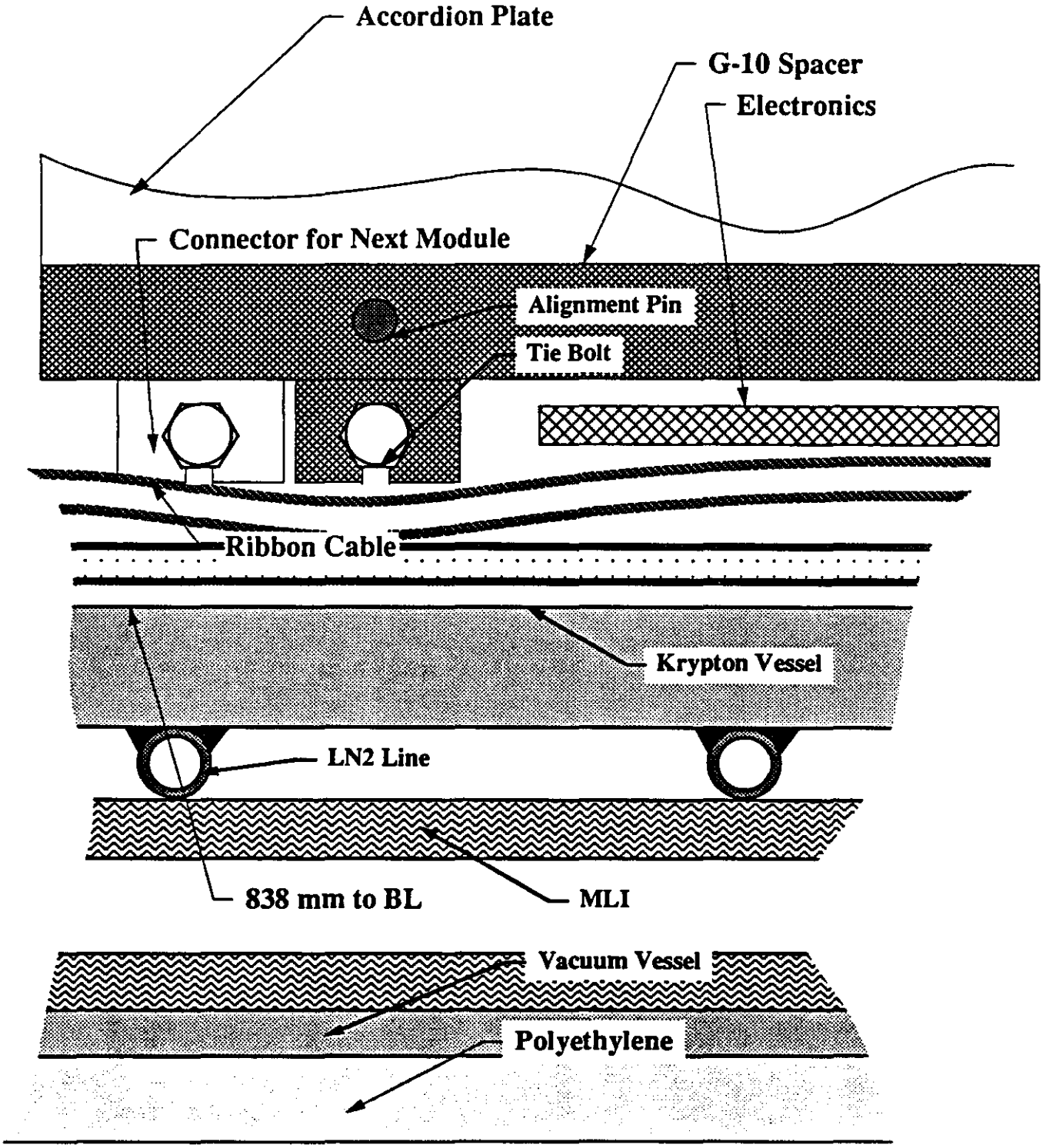

G.03.LM.017
Sheet 1/2

Liquid Krypton EM Barrel
Inner Accordion Attachment

ORNL
August 27, 1992

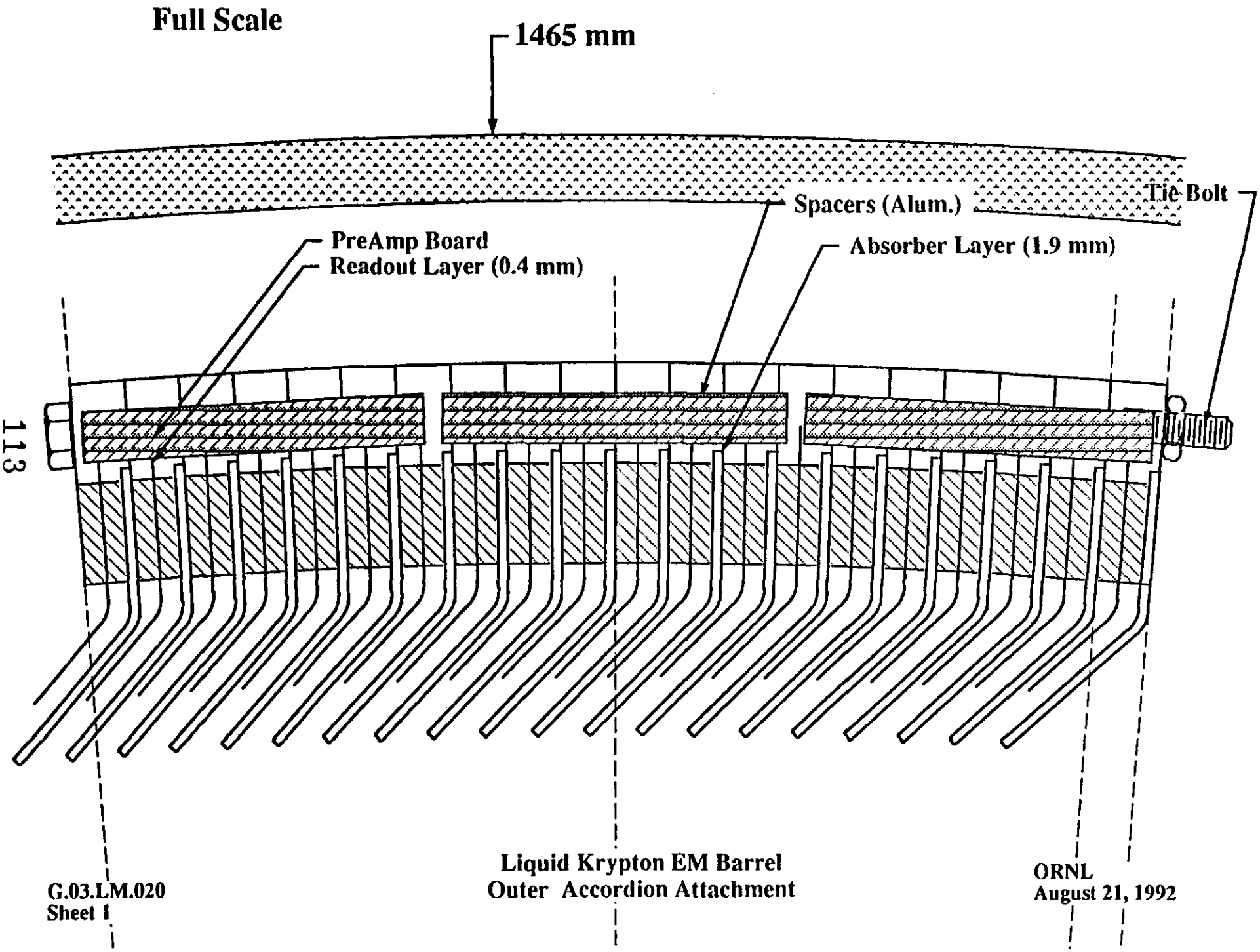
Full Scale
1465 mm
Spacers (Alum.)
Tie Bolt
PreAmp Board
Readout Layer (0.4 mm)
Absorber Layer (1.9 mm)
G.03.LM.020
Sheet 1
Liquid Krypton EM Barrel
Outer Accordion Attachment
ORNL
August 21, 1992

15.0 Radiation and Absorption Lengths of Accordion

Issue: The current accordion designs are based on liquid argon consequently the configuration of the plates may have to be changed slightly to account for the use of krypton in the barrel

Comments:

15.1 Calculations for the radiation and absorption lengths of the active barrel accordion region are attached.

15.2 Calculations indicate the current accordion array will have approximately 26 Xo.

16.0 Determination of Liquid Volumes

Issue: Liquid Krypton is expensive

Comments:

16.1 Calculations for the volume of liquid krypton are attached.

16.2 The amount of excess liquid required for operation of the cooling systems has not been determined. A factor of 20% is assumed in the cost tables.

16.3 If the barrel is redesigned to reduce the amount of krypton in front of the accordion the volume of krypton may be reduced further.

Active Thickness of Absorbers

Design: Accordion Plate

Absorber: Stainless Steel/Lead

Sense Material: Liquid Krypton

Material	Density g/cm^3	Int Lenght g/cm^2	Rad Lgh g/cm^2	Percent % Vol	Metal IL cm/L	Actual IL cm/L	Metal RL cm/X	Actual RL cm/X
Absorber Composition								
Lead	11.35	194.0	6.37	20.63%	17.09	82.83	0.56	2.72
St St	7.87	131.9	13.84	6.35%	16.76	263.97	1.76	27.70
G-10	1.70	90.2	33.00	3.17%	53.06	1671.35	19.41	611.47
Kapton	1.11	76.7	36.09	6.35%	69.14	1088.88	32.51	512.09
						59.60		
Sense Material Composition								
Krypton	2.42	145.0	11.50	63.49%	60.04	94.57	4.76	7.50
Totals	**4.50**					**35.78**		**1.85**
Inverts	0.2222					0.0280		0.5407

ccordion Make-up:

Material	Layers	Thickness	Total	Units	Total Perc	Absorb Perc
Lead	1	1.300	1.3	mm	20.63%	56.52%
St St	2	0.200	0.4	mm	6.35%	17.39%
G-10	2	0.100	0.2	mm	3.17%	8.70%
Kapton	1	0.400	0.4	mm	6.35%	17.39%
Absorber			2.3			100.00%
Liq. Kryptoı	2	2.000	4.0	mm	63.49%	
			6.3	mm	100%	

Sense Material: Liquid Argon (End Cap)

Material	Density g/cm^3	Int Lenght g/cm^2	Rad Lgh g/cm^2	Percent % Vol	Metal IL cm/L	Actual IL cm/L	Metal RL cm/X	Actual RL cm/X
Absorber Composition								
Lead	11.35	194.0	6.37	20.63%	17.09	82.83	0.56	2.72
St St	7.87	131.9	13.84	6.35%	16.76	263.97	1.76	27.70
G-10	1.70	90.2	33.00	3.17%	53.06	1671.35	19.41	611.47
Kapton	1.11	76.7	36.09	6.35%	69.14	1088.88	32.51	512.09
	2.97					59.60		
Sense Material Composition								
Argon	1.40	117.2	19.50	63.49%	83.71	131.85	13.93	21.94
Totals	**3.855**					**40.06**		**2.21**
Inverts	0.2594					0.0250		0.4529

Accordion Make-up:

Material	Layers	Thickness	Total	Units	Total Perc	Absorb Perc
Lead	1	1.300	1.3	mm	20.63%	56.52%
St St	2	0.200	0.4	mm	6.35%	17.39%
G-10	2	0.100	0.2	mm	3.17%	8.70%
Kapton	1	0.400	0.4	mm	6.35%	17.39%
Absorber			2.3			100.00%
Liq. Argon	2	2.000	4.0	mm	63.49%	
			6.3	mm	100%	

GEM Detector
Hybrid Noble Gas EM Calorimeter
EM Calorimeter only
Calculation of Liquid Vessel Volumes

Barrel Liquid Krypton Volume

Component	O.R. cm	I.R. cm	Length cm	Area cm^2	Volume cc
Middle	152	84	195	50,416	9,831,174
Outer Cut	152	140	16.1	11,008	177,231
Straight End	140	84	75	39,408	5,911,221
End Notch	116	84	42	-20,106	-844,460

Total Volume of Liquid Krypton Vessel	15,075	liter^3
Volume of Barrel Accordion Modules	11,101	liter^3
Volume Of Liquid Krypton	3,974	liter^3
Weight of Liquid Krypton	9,736	Kg

End Cap Argon Vessel Volume

Component	O.R. cm	I.R. cm	Length cm	XC Area cm^2	Volume cc
Vessel	170		105	90,792	9,533,163
Outer Cut	170	142	40	27,445	-548,899
Hole	35	27	105	1,558	-163,614

Total Volume of Liquid Argon Vessel	8,821	liter^3
Volume of End Cap Accordion Modules	3,675	liter^3
Volume Of Liquid Argon	5,145	liter^3
Weight of Liquid Argon	7,203	Kg

17.0 Determination of Vessel Weights

17.1 Calculations of the vessel weights are attached.

18.0 Determination of System Weights

18.1 Tabulation of System Weights is Attached.

GEM Detector
Liquid Argon Calorimeter
EM Calorimeter only
Calculation of Vessel Weights

Material:	Alum.	0.0027 Kg/cc

						Areas		Totals	
Component	Quant. Each	Thick cm	O.R. cm	I.R. cm	Lenght cm	Face cm^2	X-Sect. cm^2	Volume cc	Weight Kg
Barrel									
Vacuum Vessel	*1*								
Inside Cylinder	1	0.80	76		282		191	53,864	145
Outside Cylinder	1	1.30	153		376		625	234,948	634
End Plate 1	2	1.00	153	115		31,994		63,988	173
End Cone	2	1.00	115	76	43	25,802		51,604	139
Total For Vacuum Vessel								404,405	1,092
Argon Vessel	**1**								
Inside Cylinder	1	2.10	82		280		541	151,475	409
Outside Cylinder	1	1.30	147		210		600	126,075	340
Outside End Cyl	2	1.30	140		83		572	94,914	256
Outside End Plt	2	2.10	147	140		6,311		26,508	72
End Plate	2	2.10	140	115		20,028		84,116	227
End Cone	2	2.10	115	82	37	22,899		96,176	260
Total									1,304
Barrel Total									2,396
End Cap									
Vacuum Vessel	*2*								
Inside Cylinder	1	1.50	10		74		47	3,487	9
Outside Cylinder	1	2.20	182		36		1,258	45,284	122
Front Plate	2	2.50	140	10		61,261		306,305	827
Front Cone	2	2.50	182	140	51	51,591		257,956	696
Back Plate	2	3.50	182	10		103,748		726,236	1,961
Total									3,616
Argon Vessel	**2**								
Inside Cylinder	1	1.30	15		65		61	3,982	11
Outside Cylinder	1	2.10	169		65		1,115	72,472	196
Front Plate	2	4.60	140	15		60,868		559,989	1,512
Front Cone	2	4.60	169	140	44	42,713		392,960	1,061
Back Plate	2	4.60	169	15		89,020		818,986	2,211
Total									4,991
End Cap Total									8,607
Detector Total									19,610

ORNL 8-23-92

GEM Detector
Hybrid Noble Gas EM Calorimeter
Calculation of Accordion Weights

Accordion	Density	0.0030	Kg/cc

Barrel

Component	O.R. cm	I.R. cm	Length cm	Area cm^2	Volume cc	Weight Kg
Accordion Plates						
Middle	140	88.1	180	37,191	6,694,452	19,883
Outer Cut	140	131	16.1	7,662	123,364	366
Straight End	131	88.1	141	29,529	4,163,597	12,366
End Notch	116	88.1	37.2	-17,889	-665,488	-1,976

Accord. Structure	Width cm	Length cm	Thick. cm	Unit Vol. cc	Density Kg/cc	Quant	Volume cc	Weight Kg
Bottom Spacers	2	180	0.253	91.08	0.0014	1600	145,728	204
Top Cent. Spacers	2	278	0.457	254.092	0.0027	1600	406,547	1,098
Top End Spacers	2	71	0.417	59.214	0.0027	3200	189,485	512
Middle Spacers	1	76	0.2	15.2	0.0014	1600	24,320	34
End Spacers	1	30	0.2	6	0.0014	3200	19,200	27

Total Weight of Barrel Accordion Assembly (Dry) Metric Tonnes 32.51

Total Weight of Barrel Accordion Module (Dry) Kilograms 812.81

Total Accordion Structure Volume (Cu Liters) 11,101

End Cap

Component	O.R. cm	I.R. cm	Length cm	Avg Area cm^2	Volume cc	Weight Kg
Accordion Plates						
Accordion Array	154	119	62	58,535	3,629,166	10,779
Hole	21.8	28	62	-1,948	-120,765	-359

Accord. Structure	Width cm	Height cm	Radius cm	Volume cc	Density Kg/cc	Weight Kg
Back Spacers	2			89407.2	0.0014	125
Front Spacers	2			53385.7	0.0027	144
Front Ring	3	3	150	8482.3	0.0027	23
Back Ring	2	10	125	15708	0.0027	42

Total Weight of End Cap Accordion Assembly (Dry) Metric Tonnes 10.75

Total Accordion Structure Volume (Cu Liters) 3,675

GEM Detector
Hybrid Noble Gas EM Calorimeter
Tabulation of Total Weights

Barrel	Weights Mg
Accordion	32.51
LKr Vessel	1.30
Vacuum Vessel	1.09
Liquid Krypton	9.74
Supports	1.10
Barrel Total	45.74

End Cap	Weights Mg
Accordion	10.75
LAr Vessel	4.99
Vacuum Vessel	3.62
Liquid Argon	7.20
Supports	0.90
One End Cap Total	27.46
System Weight	**100.67**

19.0 Barrel Assembly Procedure

In order to achieve the best possible assembly the accordion arrays will be fitted by hand using jigs and fixtures to insure uniformity of module assembly and dimensional measurement to achieve the best assembly.

Each module will have to be dimensionally correct in five key axis:

a. Width of bottom row,
b. Width of top row,
c. Height of array,
d. Straightness of Array,
e. Twist of Array.

Comments:

19.1 Barrel accordion plates will be grouped into 40 modules or 20 absorbers and 20 sense layers each.

a. Plates will be referenced to each other with dowels
b. Dowel holes will be jig drilled.
c. Figure G.03.LM.0017 (Sht 1 &2) Shows bolted connection on inner layer
d. Figure G.03.LM.0020 Shows bolted connection on outer layer
e. Assembly fixtures will be used to control module warp

19.2 Modules will be fitted together as a single group.

a. Modules fitted line to line at outer perimeter
b. Inner perimeter gaps uniformly distributed,
c. Two outer rings used for locking outer perimeter with four individually positioned clamps,
d. Inner ring locks radial positions of modules with individually positioned clamps.

19.3 Accordion Array fitted to Liquid Vessel

a. Outer vessel welded around outer reference rings,
b. Inner vessel positioned inside inner reference rings,
c. Feedthrough rings welded to outer vessel,
d. End Walls welded to inner and outer vessels.

19.4 Liquid Vessel Fitted to Vacuum Vessel

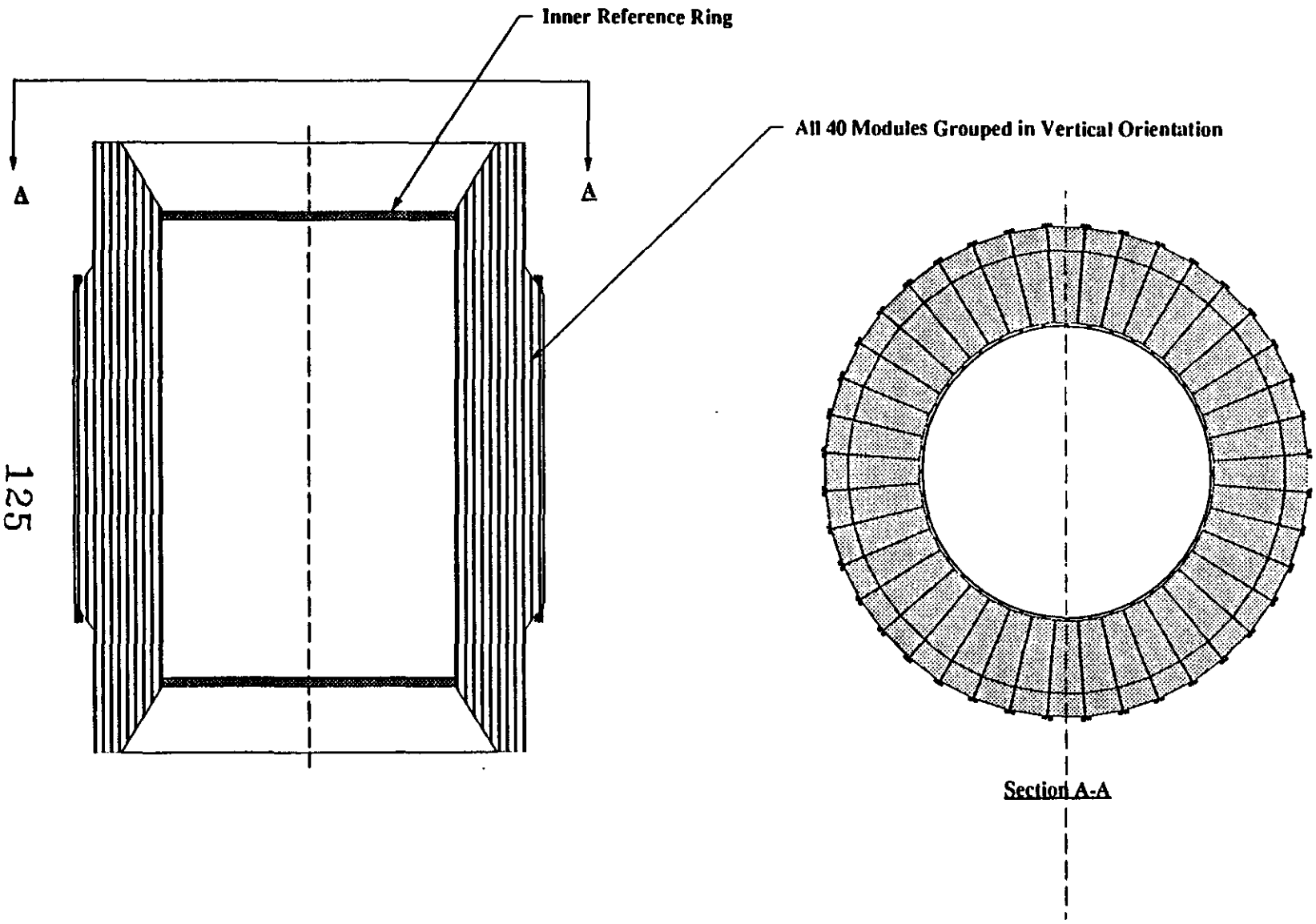

Liquid Krypton Vessel
Barrel Assembly Procedure
Operation One: Module Grouping

G.03.LM.023

ORNL
August 24, 1992

20.0 End Cap Assembly Procedure

In order to achieve the best possible assembly the accordion arrays will be fitted by hand using jigs and fixtures to insure uniformity of module assembly and dimensional measurement to achieve the best assembly.

Comments:

20.1 End Cap accordion plates will be grouped into a single module.

a. Plates will be referenced to each other with dowels
b. Dowel hole will be jig drilled.
c. Plates will be stacked in a fixture using spacer bars as references,
e. Module will be connected horizontally across spacers.

20.2 Module will be fitted to two end rings

a. Modules will be cradled in two end rings
b. Back end ring will flex with thermal distortions,

20.3 Accordion Array fitted to Liquid Vessel

a. Inner vessel Fitted over reference rings,
b. Inner vessel positioned inside array,
c. Feedthrough rings welded to outer vessel,
d. End Walls welded to inner and outer vessels.

20.4 Liquid Vessel Fitted to Vacuum Vessel

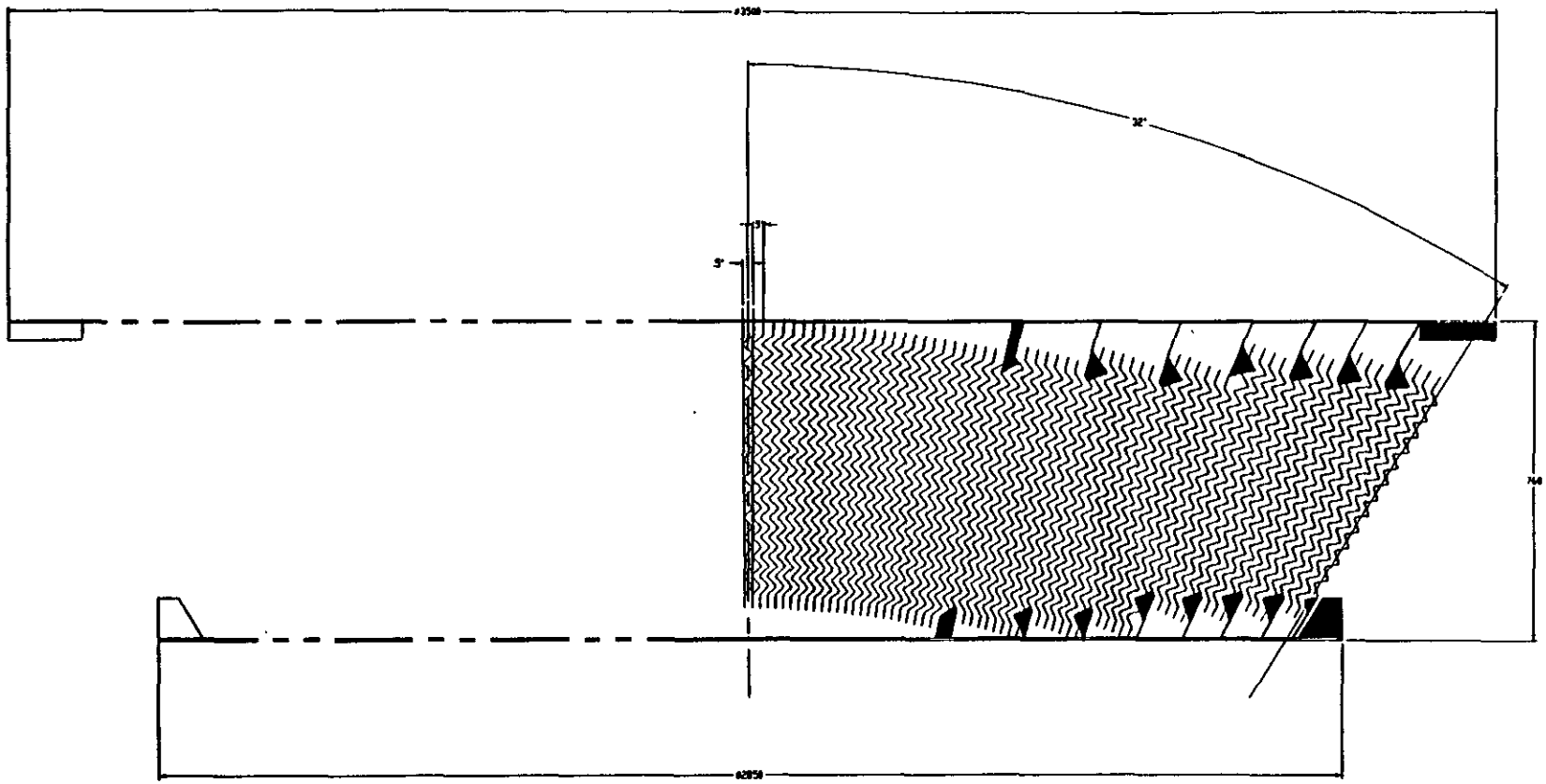

129

DO NOT REVISE MANUALLY

21.0 Accordion Component Count

Issue: Complexity of assembly based on number of pieces.

Comments:

21.1 A total component count for the accordion assemblies is attached.

21.2 The 80,000 pieces indicates the complexity of the assembly and confirms the need for extensive hand-work during assembly to overcome tolerancing problems to achieve a precision calorimeter.

GEM Detector
Hybrid Calorimeter
Component Count

1.00	Barrel Components	Quantity Per Plate	Per Cell	Per Mod	Total
A	Modules				40
B	Cells			5	200
C	Plates		4	20	800
1.10	Absorber Plates				
1.11	Stainless Sheet	2	8	40	1600
1.12	Lead Sheet	1	4	20	800
1.13	Prepreg. Mats	2	8	40	1600
1.20	Kapton Electrodes	1	4	20	800
1.30	Inner Edge Structure				
1.31	Spacer Bars	2	8	40	1600
1.32	Tie Bolts	0	0	8	320
1.33	Tie Bolt Spacers	8	32	160	6400
1.34	Alignment Pins	8	32	160	6400
1.35	Assembly Tabs	0	0	2	80
1.36	Assembly Pins	0	0	2	80
1.40	Middle Outer Edge Struct.				
1.41	Spacer Bars	2	8	40	1600
1.42	Tie Bolts	0	0	4	160
1.43	Tie Bolt Spacers	4	16	80	3200
1.44	Alignment Pins	4	16	80	3200
1.45	Assembly Tabs	0	0	4	160
1.46	Assembly Pins	0	0	4	160
1.50	End Outer Edge Struct.				
1.51	Spacer Bars	4	16	80	3200
1.52	Tie Bolts	0	0	6	240
1.53	Tie Bolt Spacers	6	24	120	4800
1.54	Alignment Pins	6	24	120	4800
1.60	Outer Longitudinal Spacers	2	8	40	1600
1.70	Middle Longitudinal Spacers	1	4	20	800
	Total Barrel Accordion Components				44,640

2.00	End Cap Components	Quantity Per Plate	Per Cell	Per Mod	Total
A	Modules				2
B	Cells			134	268
C	Plates		3	402	804
2.10	Absorber Plates				
2.11	Stainless Sheet	2	6	804	1608
2.12	Lead Sheet	1	3	402	804
2.13	Prepreg. Mats	2	6	804	1608
2.20	Kapton Electrodes	1	3	402	804
2.30	Front Edge Structure				
2.31	Spacer Bars	2	6	804	1608
2.32	Tie Bolts	0	0	6	12
2.33	Tie Bolt Spacers	8	24	3216	6432
2.34	Alignment Pins	8	24	3216	6432
2.35	Assembly Tabs	0	0	4	8
2.36	Assembly Pins	0	0	4	8
2.40	Back Edge Structure				
2.41	Spacer Bars	2	6	804	1608
2.42	Tie Bolts	0	0	8	16
2.43	Tie Bolt Spacers	8	24	3216	6432
2.44	Alignment Pins	8	24	3216	6432
2.45	Assembly Tabs	0	0	5	10
2.46	Assembly Pins	0	0	5	10
2.50	Vertical Tie Rods	0	0	24	48
	Total End Cap Accordion Components				34,954
	Total Accordion Components				**79,594**

IV. Alternative Hybrid Calorimeter Design

V.1 Parallel Plate Noble Liquid EM Calorimeter

A parallel option for the noble liquid EM calorimeter has been successfully tested for use in GEM. The basic design is shown in Figures P-00ii. The layout is also described in the attached sketches. The parameters for the system are attached. Of these the most significant is the number of solder joints (approximately 4 million). It is this large number of joints which is found to be the primary weakness of this proposal.

The mechanical configuration of the parallel plate system offers many advantages for mounting and assembly at final assembly. The

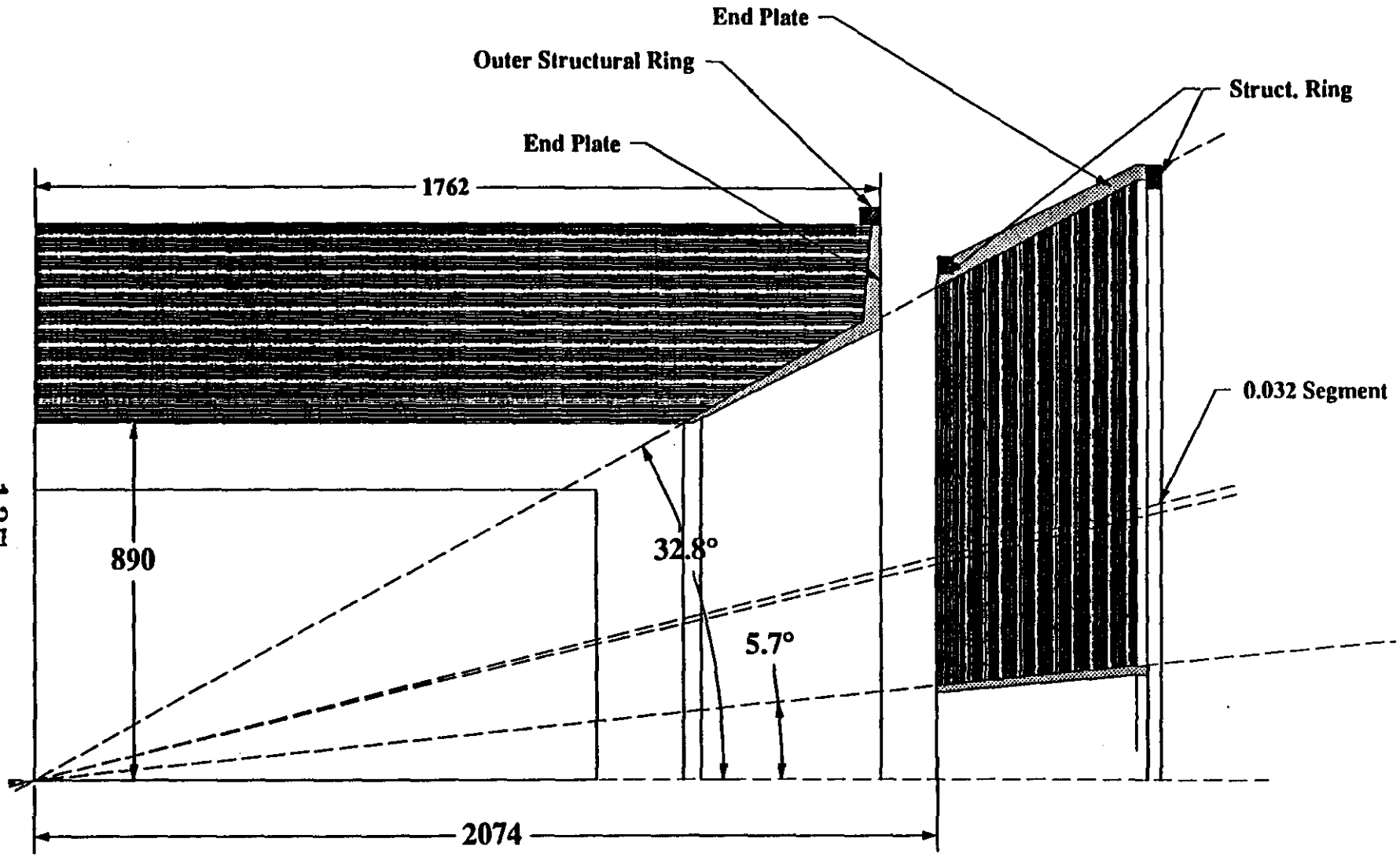

GEM Detector
Liquid Argon
EM Calorimeter
Parallel Plate

G.03.PP.001

ORNL
Aug 17, 1992

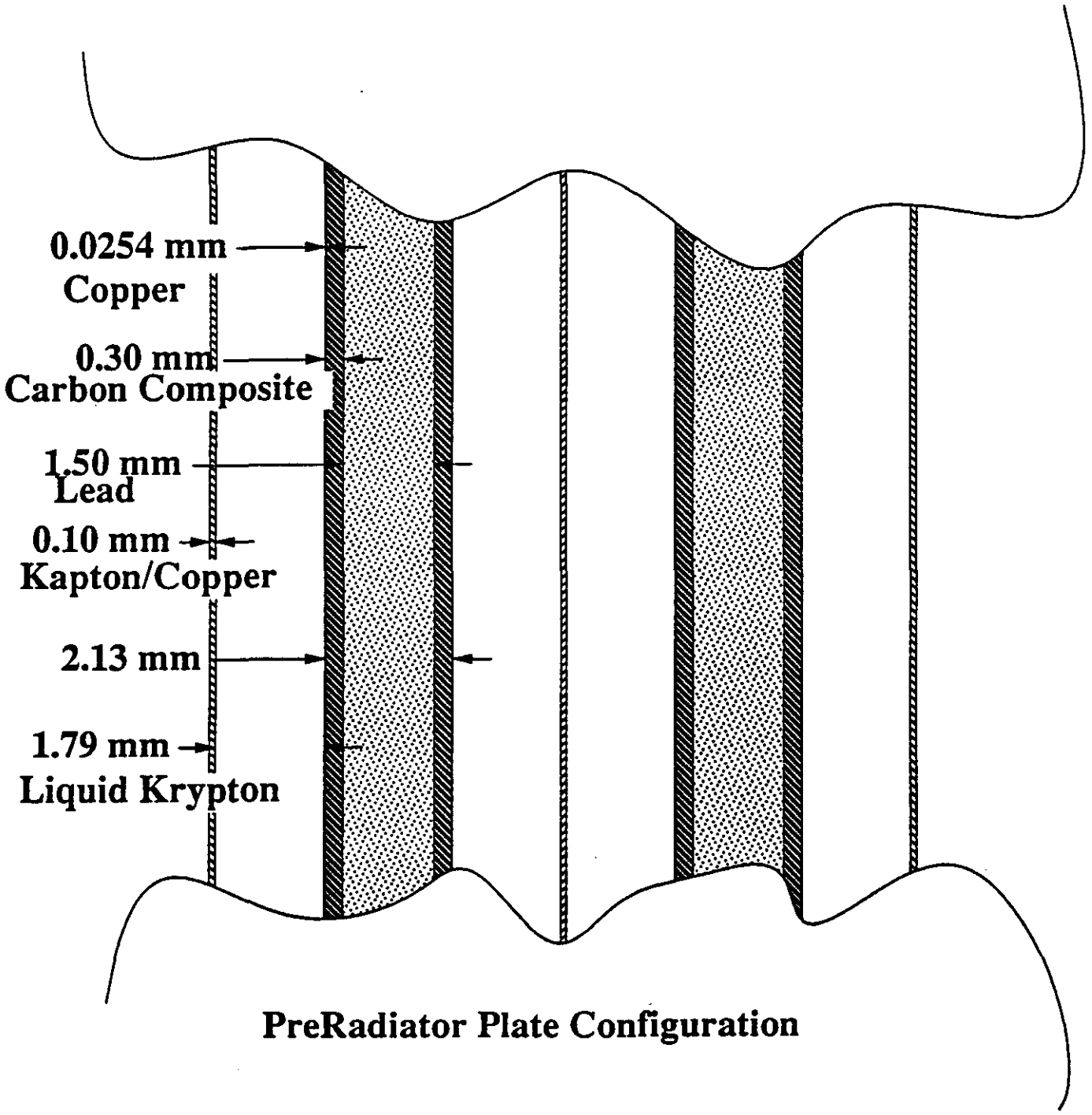

PreRadiator Plate Configuration

GEM Detector
Liquid Krypton Calorimeter
Parallel Plate Configuration

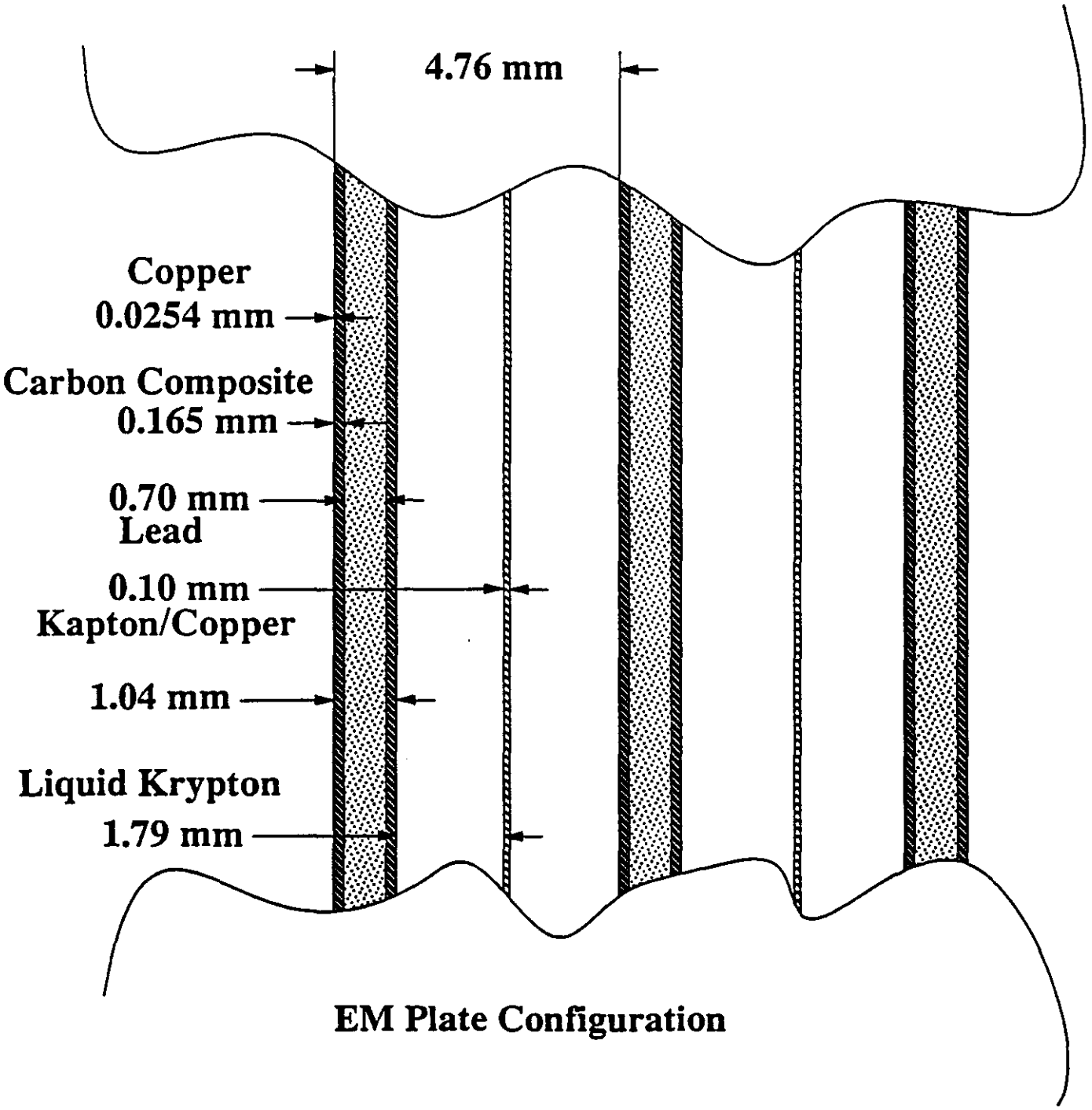

EM Plate Configuration

GEM Detector
Liquid Krypton Calorimeter
Parallel Plate Configuration

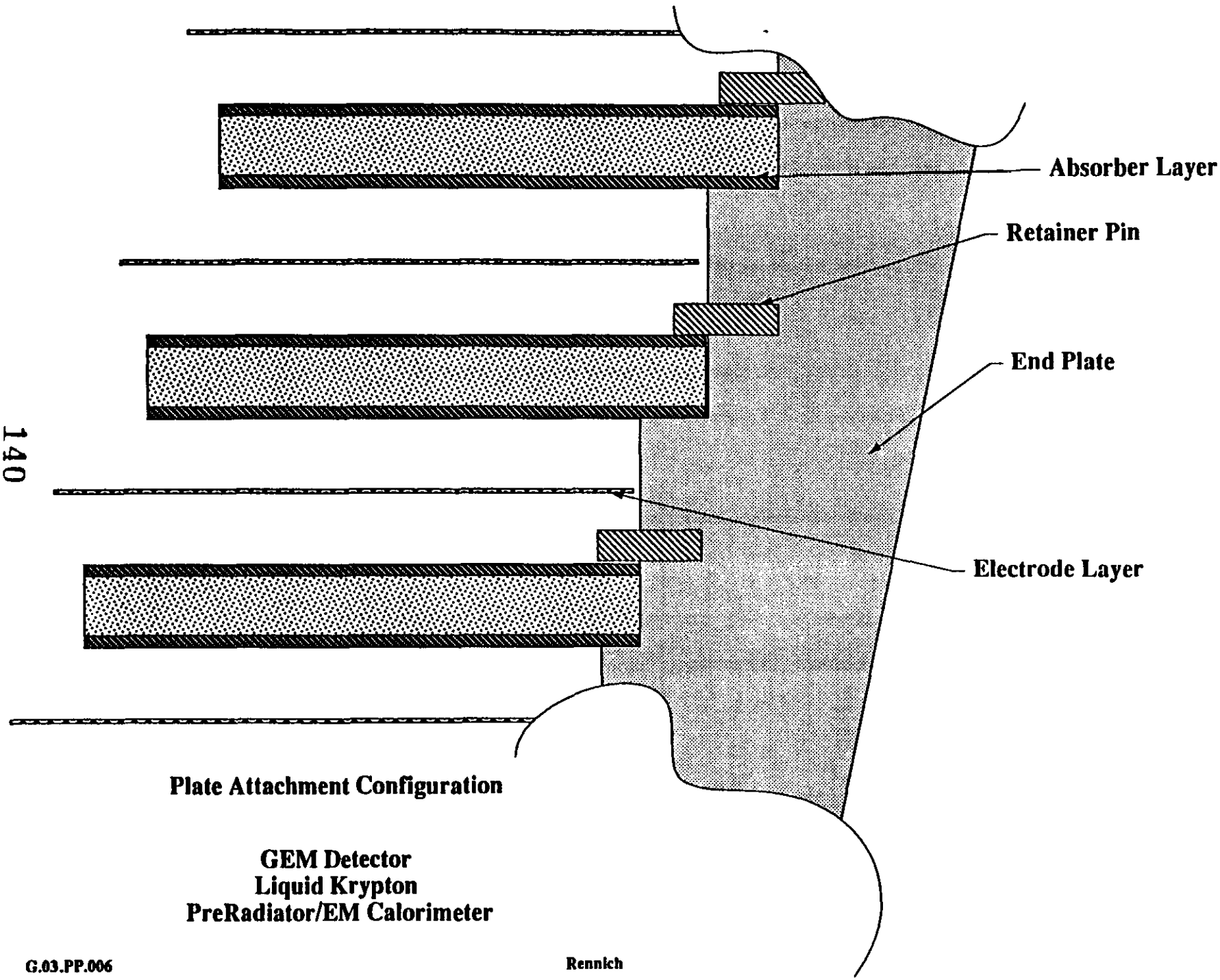

Plate Attachment Configuration

GEM Detector
Liquid Krypton
PreRadiator/EM Calorimeter

G.03.PP.006

Rennich

Parallel Plate LKr EM Calorimeter

Stack-up Configuration

PreRadiator	Thickness	Layers	Total Thick
Copper	0.025		
PrePreg	0.3		
Lead	1.5		
PrePreg	0.3		
Copper	0.025		
Absorber	2.15	11	23.65
LKr Gap	1.9	21	39.9
Electrode	0.1	10	1
Total			64.55
Avg. Layer Thickness			5.87

PreRadiator	Thickness	Layers	Total Thick
Copper	0.025		
PrePreg	0.165		
Lead	0.7		
PrePreg	0.165		
Copper	0.025		
Absorber	1.08	98	105.84
LKr Gap	1.9	197	374.3
Electrode	0.1	97	9.7
Total			489.84
Avg. Layer Thickness			5.00

Computed Paramters for Complete Detec

Totals	PreRadiator	EM Cal	Detector	
Segments	81,686	2,924,320	3,006,006	each
Channels	29,704	29,840	59,544	each
Striplines	1,867	7,460	9,327	each
Types of Stripline	40	40	80	each
Lenght of Stripline			5,028	M
Connections	260,404	3,655,400	3,915,804	Each
PreRadiator Plate Area	405	4025	4,430	M^2
Volume of Lead	0.61	6.04	6.65	M^3
Weight of Lead	6.90	68.53	75.43	Mg
Area of Copper	811	8,050	8,861	M^2
Weight of Copper	0.18	1.82	2.00	Mg
Area of PrePreg	811	8,050	8,861	M^2
Weight of PrePreg	0.41	4.11	4.52	Mt
Area of electrodes	405	4,025	4,430	M^2
Weight of Electrodes	0.14	1.41	1.55	Mg
Volume of LKr	0.73	7.24	8	M^3
Weight of LKr	1.24	12.32	13.56	Mg
Area of Amplifier	32.75	52.05	84.80	M^2
Active Material Weight	8.88	88.18	97.05	Mg

Liquid Krypton Parallel Plate Parameters Worksheet

Input Parameters-End Cap

Distance to IP	2074	mm
Total Thickness	530.50	mm
Thick. of PreRad. Layer	5.66	mm
No. of PreRad Layers	11	each
Thickness of PreRad	62.25	mm
Thickness of EM Layer	4.78	mm
Number of EM layers	98	each
Thickness of EM Section	468.25	mm

Computed Parameters for One End Cap Side

	PreRadiator	EM Cal	Total	
Segments	19,283	693,840	713,123	each
Channels	7012	7080	14092	each
Striplines	443	1,770	2,213	each
Lenght of Stripline			1086	M
Plate Area	90.47	416.15	507	M^2
Volume of Lead	63,328	624,226	687,554	cm^3
Weight of Lead	0.72	7.08	8	Mg
Amp/Cap Board Area	5.75	9.07	15	M^2
Connections=	19,913	867,300	887,213	Each

Liquid Krypton Parallel Plate Parameters Worksheet

Input Parameters-Barrel

Inside Radius	890	mm
Total Thickness	530.50	mm
Half Lenght of Barrel	1762	mm
Thick. of PreRad. Layer	5.66	mm
No. of PreRad Layers	11	each
Thickness of PreRad	62.25	mm
Thickness of EM Layer	4.78	mm
Number of EM layers	98	each
Thickness of EM Section	468.25	mm

Computed Parameters for One Half Barrel

	PreRadiator	EM Cal	Total	
Segments	21,560	768,320	789,880	each
Channels	7,840	7,840	15,680	each
Striplines	491	1960	2451	each
Lenght of Stripline			1,427	M
Plate Area	112.18	1596.34	1,709	M^2
Volume of Lead	1,195,957	2,394,503	3,590,460	cm^3
Weight of Lead	13.57	27.18	41	Mg
Area of Cap/Amp Boards	10.62	16.96	28	M^2
Connections	110,289	960,400	1,070,689	Each

Barrel Modules= 16.00

Computed Parameters for One Barrel Module

	PreRadiator	EM Cal	Total	
Segments	2,695	96,040	98,735	each
Channels	980	980	1,960	each
Striplines	61	245	306	each
Lenght of Stripline			178	M
Plate Area	14	200	214	M^2
Volume of Lead	149,495	299,313	448,807	cm^3
Weight of Lead	1.70	3.40	5.09	Mg
Area of Cap/Amp Boards	1.33	2.12	3.45	M^2
Connections	13,786	120,050	133,836	Each

End Cap Modules/Side = 8

Computed Parameters for One End Cap Module

	PreRadiator	EM Cal	Total	
Segments	2,410	86,730	89,140	each
Channels	877	885	1762	each
Striplines	55	221	277	each
Lenght of Stripline	0	0	136	M
Plate Area	11	52	63	M^2
Volume of Lead	7,916	78,028	85,944	cm^3
Weight of Lead	0	1	1	Mg
Amp/Cap Board Area	1	1	2	M^2
Connections=	2,489	108,413	110,902	Each

V.2 Skewed Accordion Barrel Plates

An alternative accordion plate design has been proposed at CERN to address the angular differences in the current arrangement. A sketch of this proposal is attached.

The alternative plate design has not been analyzed here however a couple of comments can be made:

. A more complex assembly and structural arrangement will probably be required since the skewed plates do not have any flat edges to either reference or hold.

. The skewed plates do not have a uniform behavior in the longitudinal axis. This will complicate the structure from both the thermal and stability standpoints.

. Skewing the plates removes the stiffness available in the axially folded plates.

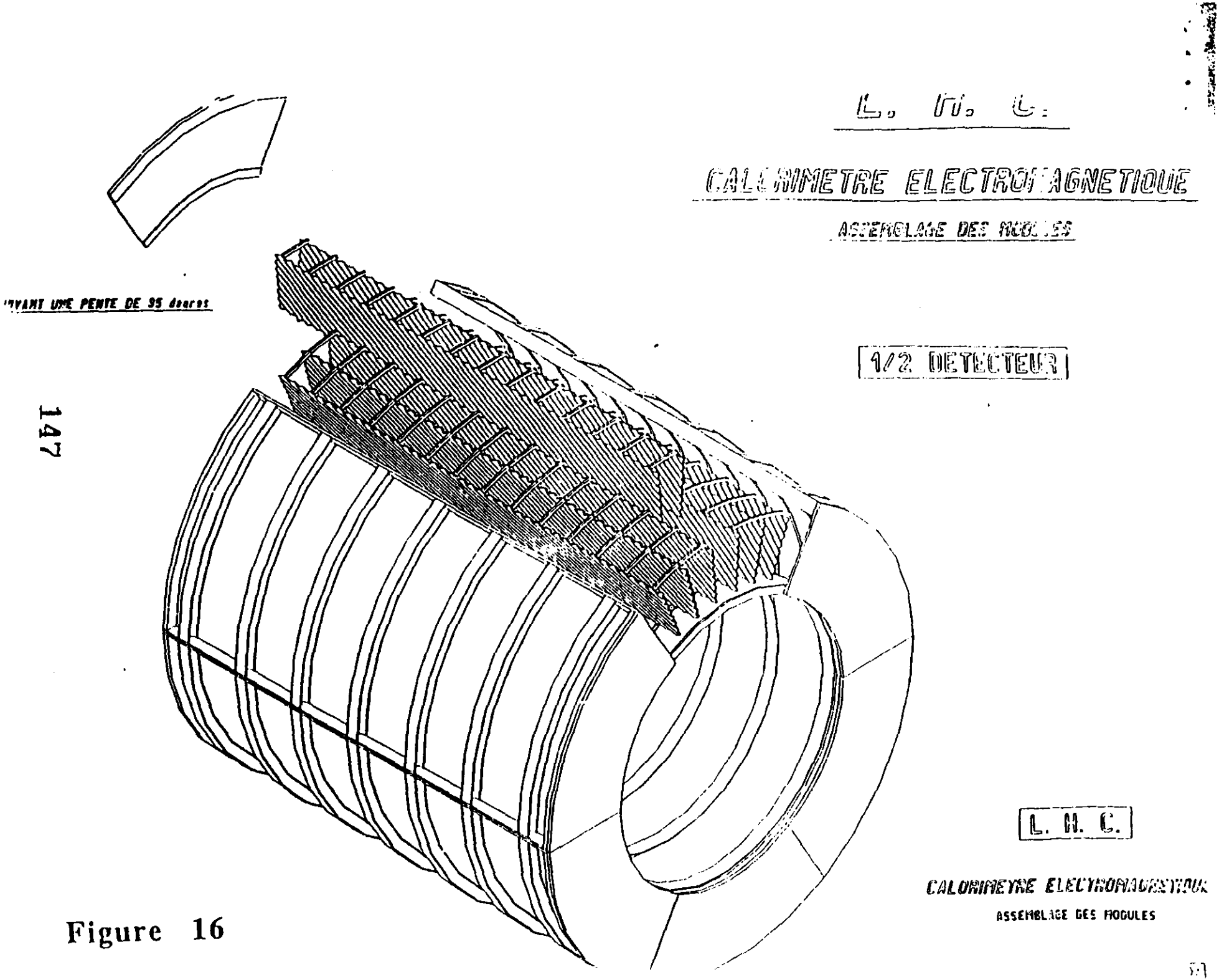
L. H. C.
CALORIMETRE ELECTROMAGNETIQUE
ASSEMBLAGE DES MODULES
1/2 DETECTEUR
L. H. C.
CALORIMETRE ELECTROMAGNETIQUE
ASSEMBLAGE DES MODULES

Figure 16

VI. Fiber Hadron Parameters

The parameters worksheet results for the fiber hadron calorimeter which will be used in conjunction with a noble liquid EM calorimeter are attached. It should be noted that since the noble liquid system is approximately 0.4 l thicker than the BaF2 EM the overall weight and cost are nearly the same eventhough the inside hadron diameter is larger.

Scintillating Fiber Hadron Calorimeter
Parameters Worksheet- Liquid Krypton EM Only

Input Parameters		
Inside Radius-One	1570	mm
Inside Radius-Two	1850	mm
Inside Radius-Three	1800	mm
Distance to IP	3050	mm
Unit Thickness	164.5	mm/Lambda
Material Density		
Plate Density	8.26	g/cc
Tube Density	8.98	g/cc
Fiber Density	1.03	g/cc
Fiber Diameter	1.5	mm
Tube ID	1.6	mm
Tube OD	3.00	mm
Tube Area	0.05	cm^2
Layer Thickness	8.00	mm
Fiber Spacing	8.00	mm
Fiber Vol Fract.	3.00%	
Cu Tube Fract.	9.99%	
Cu Sheet Fract.	84.60%	
Gap betwn Towers	1.00	mm
Absorption Lengths		
EM Barrel	2.00	Lambda
EM End Cap	2.55	Lambda
Inner Ribs	0.05	Lambda
Outer Support Tube	0.33	Lambda

Liquid Krypton EM Only

Computed Parameters for Complete Fiber Calorimeter

	Total	
Number of Mech.Theta Rows	28	Each
Number of Mech. Towers	944	Each
Absorber Volume	206.76	M^3
Fiber Lenght	4,562,994	M
Cu Tube Length	3,509,995	M
Cu Tube Weight	159,426	Kg
Number of Plates	53,677	each
Plate Weight	1446.87	Mt
Number of Fibers	3,016,735	each
Total Weight	1619.32	MT

Liquid Krypton EM Only Configuration

Computed Parameters for End Cap

One Side

	Total		Tower	
Number of Theta Rows	9	Each	Average	
Number of Mech. Towers	272	Each	1	
Absorber Volume	57.43	M^3	211,156	cc
Fiber Lenght	1,267,547	M	4,660	M
Cu Tube Length	975,036	M	3,585	M
Cu Tube Weight	44,287	Kg	162.82	Kg
Number of Plates	14,695	each	54	each
Plate Weight	401.92	Mt	1477.66	Kg
Number of Fibers	787,085	each	2,894	each
Total Weight	449.88	MT	1653.96	Kg

Liquid Krypton EM Only

Computed Parameters for Barrel

COMPLETE BARREL

	Total		Tower	
Number of Mech. Theta Rows	10	Each	Average	
Number of Mech. Towers	400	Each	1	
Absorber Volume	91.89	M^3	229,718	cc
Fiber Lenght	2,027,900	M	5,070	M
Cu Tube Length	1,559,923	M	3,900	M
Cu Tube Weight	70,853	Kg	177	Kg
Number of Plates	24288.00	each	61	each
Plate Weight	643.02	Mt	1,608	Kg
Number of Fibers	1,442,566	each	3,606	each
Absorber Weight	719.57	MT	1,799	Kg

Barrel Row Number		1	2	3	4	5
Tot Thk (W/LKr EM)	Lambda	12.00	12.00	11.97	12.11	12.08
Eta Coverage		0.160	0.160	0.160	0.160	0.160
"A"	Eta	0.00	0.16	0.32	0.48	0.64
"B"	Eta	0.160	0.320	0.480	0.640	0.800
Phi Coverage		0.160	0.160	0.160	0.160	0.160
Theoretical Segments	Each	39.27	39.27	39.27	39.27	39.27
Actual Segments	Each	40	40	40	40	40
Angular Coverage						
"A"	Degrees	90.00	80.87	71.97	63.50	55.60
"B"	Degrees	80.87	71.97	63.50	55.60	48.39
Centerline	Degrees	85.44	76.42	67.73	59.55	52.00
"A"	Radians	1.571	1.411	1.256	1.108	0.970
"B"	Radians	1.411	1.256	1.108	0.970	0.845
Centerline	Radians	1.491	1.334	1.182	1.039	0.908
Absorber Length	mm	1582	1582	1560	1550	1530
Front Face Dimensions						
"A" Theta Face Width	mm	249.76	255.89	261.59	266.65	270.96
"B" Theta Face Width	mm	246.62	246.62	246.62	246.62	246.62
Phi Width	mm	251.47	251.51	251.58	251.68	251.77
Gap Area	mm^2	499.66	502.77	505.69	508.31	510.56
Projected Area	mm^2	61913	62690	63422	64080	64646
Gap Fraction		0.80%	0.80%	0.79%	0.79%	0.78%
Back Face Dimensions						
"A" Theta Face Width	mm	498.27	501.39	495.01	485.30	470.43
"B" Theta Face Width	mm	491.97	482.91	465.91	447.52	426.31
Phi Width	mm	504.86	501.79	489.81	475.40	456.94
Gap Area	mm^2	1000	994	970	942	905
Projected Area	mm^2	248,963	245,964	234,362	220,791	203,973
Gap Fraction		0.40%	0.40%	0.41%	0.42%	0.44%
Tower Parameters						
Active Absorber Volume	cc	245,903	244,145	232,272	220,775	205,493
Fiber Length	M	5427	5388	5126	4872	4535
Fiber Weight	Kg	10	10	9	9	8
Tube Length	M	4175	4145	3943	3748	3489
Tube Volume	cc	21,115	20,964	19,944	18,957	17,645
Tube Weight	Kg	190	188	179	170	158
No. of Plates	each	63	63	61	59	57
Plate Weight	Kg	1721	1709	1625	1545	1438
Number of Fibers	each	3890	3843	3662	3450	3187
Added Weight	Kg	5	5	5	5	5
Tower Weight	Kg	1925.31	1911.58	1818.86	1729.08	1609.74
Row Parameters						
Absorber Volume	M^3	9.84	9.77	9.29	8.83	8.22
Fiber Lenght	M	217,078	215,526	205,045	194,895	181,405
Cu Tube Length	M	166,983	165,790	157,727	149,920	139,543
Tube Weight	cc	7,584	7,530	7,164	6,809	6,338
No. of Plates	each	2,524	2,509	2,449	2,377	2,285
Plate Weight	Mt	68.83	68.34	65.02	61.80	57.52
Number of Fibers	each	155,602	153,727	146,476	137,994	127,483
Row Weight	Mt	77.01	76.46	72.75	69.16	64.39
		DBNL 8.25.93	Fiber/LKr EM Only			

Barrel Row Number		6	7	8
Tot Thk (W/LKr EM)	Lambda	12.06	12.39	12.39
Eta Coverage		0.160	0.160	0.160
"A"	Eta	0.80	0.96	1.12
"B"	Eta	0.960	1.120	1.280
Phi Coverage		0.160	0.160	0.160
Theoretical Segments	Each	39.27	39.27	39.27
Actual Segments	Each	40	40	40
Angular Coverage				
"A"	Degrees	48.39	41.90	36.14
"B"	Degrees	41.90	36.14	31.08
Centerline	Degrees	45.15	39.02	33.61
"A"	Radians	0.845	0.731	0.631
"B"	Radians	0.731	0.631	0.542
Centerline	Radians	0.788	0.681	0.587
Absorber Length	mm	1510	1700	1700
Front Face Dimensions				
"A" Theta Face Width	mm	274.52	326.83	320.54
"B" Theta Face Width	mm	246.62	282.74	282.74
Phi Width	mm	251.87	288.86	288.95
Gap Area	mm^2	512.44	593.65	590.59
Projected Area	mm^2	65116	87448	86569
Gap Fraction		0.78%	0.67%	0.68%
Back Face Dimensions				
"A" Theta Face Width	mm	453.39	498.48	480.51
"B" Theta Face Width	mm	405.03	440.23	420.58
Phi Width	mm	437.36	478.23	459.03
Gap Area	mm^2	867	948	910
Projected Area	mm^2	186,853	223,512	205,905
Gap Fraction		0.46%	0.42%	0.44%
Tower Parameters				
Active Absorber Volume	cc	190,237	264,317	248,603
Fiber Length	M	4198	5833	5487
Fiber Weight	Kg	8	11	10
Tube Length	M	3230	4487	4220
Tube Volume	cc	16,335	22,696	21,347
Tube Weight	Kg	147	204	192
No. of Plates	each	55	60	57
Plate Weight	Kg	1331	1850	1740
Number of Fibers	each	2920	3492	3217
Added Weight	Kg	5	5	5
Tower Weight	Kg	1490.60	2069.11	1946.40
Row Parameters				
Absorber Volume	M^3	7.61	10.57	9.94
Fiber Lenght	M	167,937	233,333	219,462
Cu Tube Length	M	129,182	179,487	168,817
Tube Weight	cc	5,868	8,152	7,668
Number of Cu Layers	each	2,187	2,391	2,295
Copper Plate Weight	Mt	53.25	73.99	69.59
Number of Fibers	each	116,783	139,695	128,691
Row Weight	Mt	59.62	82.76	77.86
	ORNL 8-25-92	Fiber/LKr EM Only		

End Cap Row Number		9.00	10.00	11.00	12.00	13.00
Tot Thk (W/LKr EM)	Lambda	12.08	12.33	12.63	12.94	13.24
Eta Coverage		0.150	0.180	0.220	0.280	0.390
A	Eta	1.28	1.43	1.61	1.83	2.11
B	Eta	1.430	1.610	1.830	2.110	2.500
Phi Coverage		0.150	0.180	0.220	0.280	0.390
Theoretical Segments	Each	41.89	34.91	28.56	22.44	16.11
Actual Segments	Each	40	34	28	22	16
Angular Coverage						
Face "A"	Degrees	31.08	26.92	22.61	18.23	13.83
Face "B"	Degrees	26.92	22.61	18.23	13.83	9.39
Centerline	Degrees	29.00	24.76	20.42	16.03	11.61
Face "A"	Radians	0.542	0.470	0.395	0.318	0.241
Face "B"	Radians	0.470	0.395	0.318	0.241	0.164
Centerline	Radians	0.506	0.432	0.356	0.280	0.203
Absorber Length	mm	1560	1600	1650	1700	1750
Front Face Dimensions						
"A" Face Width	mm	288.73	286.16	285.00	286.85	294.75
"B" Face Width	mm	265.29	256.26	246.18	234.38	217.44
Face Height	mm	253.35	252.81	249.00	243.92	241.43
Gap Area	mm^2	530.36	524.01	514.59	504.53	497.53
Face Area	mm^2	69651	68038	65617	63064	61332
Gap Fraction		0.76%	0.76%	0.78%	0.79%	0.80%
Back Face Dimensions						
"A" Face Width	mm	415.22	420.01	427.33	438.71	458.98
"B" Face Width	mm	399.66	399.82	400.81	402.87	406.82
Face Height	mm	444.37	426.88	409.62	394.60	387.19
Gap Area	mm^2	852	837	824	815	820
Face Area	mm^2	180,201	174,147	168,787	165,227	166,795
Gap Fraction		0.47%	0.48%	0.49%	0.49%	0.49%
Tower Parameters						
Active Absorber Volume	cc	194884	193748	193384	194047	199611
Fiber Length	M	4301	4276	4268	4283	4405
Fiber Weight	Kg	8	8	8	8	8
Tube Length	M	3308	3289	3283	3294	3389
Tube Volume	cc	16734	16637	16605	16662	17140
Tube Weight	Kg	150	149	149	150	154
No. of Plates	each	56	53	51	49	48
Plate Weight	Kg	1364	1356	1353	1358	1397
Number of Fibers	each	2816	2721	2637	2582	2606
Added Weight	Kg	5	5	5	5	5
Tower Weight	Kg	1526.89	1518.02	1515.18	1520.36	1563.80
Row Parameters						
Absorber Volume	M^3	7.80	6.59	5.41	4.27	3.19
Fiber Lenght	M	172,040	145,382	119,501	94,216	70,485
Cu Tube Length	M	132,338	111,832	91,924	72,473	54,219
Tube Weight	Kg	6,011	5,079	4,175	3,292	2,463
No. of Plates	each	2,222	1,814	1,434	1,085	774
Plate Weight	Mt	54.55	46.10	37.89	29.87	22.35
Number of Fibers	each	112,626	92,516	73,844	56,797	41,699
Row Weight	Mt	61.08	51.61	42.42	33.45	25.02

ORNL 8-25-92 Fiber/LKr EM Only

End Cap Row Number		14.00
Tot Thk (W/LKr EM)	Lambda	14.58
Eta Coverage		0.500
A	Eta	2.50
B	Eta	3.000
Phi Coverage		0.500
Theoretical Segments	Each	12.57
Actual Segments	Each	12
Angular Coverage		
Face "A"	Degrees	9.39
Face "B"	Degrees	5.70
Centerline	Degrees	7.54
Face "A"	Radians	0.164
Face "B"	Radians	0.099
Centerline	Radians	0.132
Absorber Length	mm	1971
Front Face Dimensions		
"A" Face Width	mm	263.95
"B" Face Width	mm	173.14
Face Height	mm	197.93
Gap Area	mm^2	416.48
Face Area	mm^2	42840
Gap Fraction		0.96%
Back Face Dimensions		
"A" Face Width	mm	432.25
"B" Face Width	mm	366.46
Face Height	mm	328.14
Gap Area	mm^2	727
Face Area	mm^2	130,315
Gap Fraction		0.56%
Tower Parameters		
Active Absorber Volume	cc	170645
Fiber Length	M	3766
Fiber Weight	Kg	7
Tube Length	M	2897
Tube Volume	cc	14653
Tube Weight	Kg	132
No. of Plates	each	41
Plate Weight	Kg	1194
Number of Fibers	each	2036
Added Weight	Kg	5
Tower Weight	Kg	1337.60
Row Parameters		
Absorber Volume	M^3	2.05
Fiber Lenght	M	45,192
Cu Tube Length	M	34,763
Tube Weight	Kg	1,579
No. of Plates	each	492
Plate Weight	Mt	14.33
Number of Fibers	each	24,434
Row Weight	Mt	16.05

ORNL 8-25-92 Fiber/LKr EM Only