GEM TN-92-163

Barium Fluoride Research and Development at Lawrence Livermore National Laboratory

Craig R. Wuest, Ben A. Fuchs, W. Kway
Lawrence Livermore National Laboratory

July 24, 1992

Abstract:

Lawrence Livermore National Laboratory (LLNL) has participated in an active R&D program for the Barium Fluoride Collaboration since March 1992. In this time a number of different research programs have been carried out. These areas include: 1) crystal surface preparation and analysis, 2) UV reflective coatings and coating technology, and 3) crystal growing. This paper will present a brief summary of the work in these three areas as well as a summary of a recent trip to China to assess the technical capabilities of different institutes and factories in China. Also a number of sketches, summary view graphs, photographs and documents are included.

Barium Fluoride Surface Preparation and UV Coating R&D at LLNL - A Progress Report

Craig R. Wuest
Lawrence Livermore National Laboratory

April 23, 1992

1. Introduction

Lawrence Livermore National Laboratory (LLNL) has been asked to provide R&D on new methods of barium fluoride (BaF_2) crystal surface preparation, as well as optical coating methods to improve the efficiency of transport of scintillation light through the crystal to the photodetector. The goal of the R&D is to identify a method (or methods) for preparing the surface to eliminate the amorphous layer that has been found to be a product of the surface preparation techniques used when the crystals are manufactured in China and provide a crystalline surface free from oxygen and other contamination, with suitable flatness for optical coating. UV reflective coatings have been identified that are suitable for the wavelengths of the scintillation light (220 nm peak). The coating consists of a layer of aluminum with a magnesium fluoride over-layer. This coating can be applied in a uniform layer or in a graded layer, with reflectance varying as a function of position. It is ultimately desired that the UV coating be applied with graded reflectance to linearize the response of the crystal along it length.

2. BaF_2 Surface preparation R&D at LLNL

A number of surface preparation techniques have been identified as potentially capable of removing the amorphous layer and providing a clean crystalline layer for coating. The R&D program, which began in early March, 1992 has explored the following surface preparation techniques:

A. Polishing with diamond grits

BaF_2 crystals have been polished at LLNL using this standard technique for use as laser windows. Up to this point it has not been known how the crystal structure is affected. Comparison of this polishing technique with diamond turning has shown that diamond turned laser windows are less susceptible to damage in high intensity laser beams. The process uses diamond impregnated pads and a BaF_2 sample was polished to 20 angstrom RMS surface finish for study. This technique is probably not suitable for large area polishing because edges tend to be rounded off and flatness over large areas is not easily achieved

B. Ductile grinding

The process known as ductile grinding uses a specially prepared wheel coated with diamond. The wheel is prepared so that it is flat to within 0.25 - 0.5 microns and the part to be polished is translated across the surface of the rotating wheel. In effect, this is using many diamond turning bits instead of one. The advantage of this process is that it is very suitable for mass production polishing of large numbers of crystal surfaces. LLNL's ductile grinding system was dismantled last year and I have requested that it be rebuilt. We do not have results from this process yet.

C. Diamond pitch lapping

This process uses specially prepared wheels coated with a synthetic pitch and impregnated with diamond powder. The prepared wheel is rotated and the sample to be polished is translated back and forth across the wheel as the wheel rotates. The sample is usually immersed or heavily washed with a low viscosity silicon oil. We have prepared a small sample using this technique and have measured a surface finish of about 10 angstroms RMS. This technique has the advantage of being simple to implement and can provide large area and large quantity polishing capability.

D. Diamond turning of the crystal surface

Diamond turning of crystal surfaces are routinely done at LLNL in support of the Laser Program and other programs requiring precision optical surfaces. LLNL's Large Optics Diamond Turning Facility (LODTM) is capable of turning surfaces with radii as large as 1.65 meters with a precision at the few angstrom level. Other smaller diamond turning machines are available for preparing surfaces with similar precisions.

We opted to perform "wet" diamond turning using a highly purified water-free lubricating fluid (Drakeol 7, a low viscosity poly-alpha olefin oil). Alternative cutting fluids include low viscosity silicone oil or a pure hydrocarbon such as hexanes. Drakeol 7 is routinely used for diamond turning potassium di-hydrogen phosphate crystals (KDP) for use as frequency doubling and tripling crystals for the Nova laser at LLNL. The crystals are turned and then cleaned using a pure toluene soak for 24 hours. A similar cleaning method was used on BaF_2 crystals.

We achieved very successful results using small samples of BaF_2 crystals. In one sample we were able to achieve a 6 angstrom RMS surface finish measured over a 600 micron area of the crystal. We also observed that the surface finish depended on the crystal lattice orientation. In one sample we observed markedly different surface finish quality when machining across a crystal grain boundary. The surface finish on one side of the boundary was found to be 80 angstroms RMS compared with 6 angstroms RMS immediately on the other side of the grain boundary.

In summary BaF_2 appears to be a good material for diamond turning and other diamond cutting processes, such as ductile grinding and diamond pellet lapping.

E. Argon Ion Beam Milling

Argon ion beams are also available for removing material from the crystal surface. In this technique a beam of argon ions is directed onto the surface to be milled, with the rate of material removal determined by the orientation of the crystal surface with respect to the beam. For our studies the crystal was oriented at 45 degrees. Removal rates vary depending on the material but typically are a few microns per minute to a few microns per hour. For our study a carbon mask about 2 cm x 1 cm was prepared to allow the crystal to be milled in a controlled manner. Carbon is a good material for the mask because of its extremely low sputtering rate compared to most materials.

We prepared three samples with measured removal depths of about 0.5, 1.0 and 2.0 microns. The samples took about 1/2 hour to remove 1 micron of material. Surface quality was observed to be poor (compared to previously described surfaces finishes) and in general followed the original surface quality.

2. X-ray diffraction analysis and energy dispersive spectroscopy

Crystals were analyzed, before and after preparation using x-ray diffraction analysis, and electron beam microprobe methods for the determination of structural and chemical properties of the surface, respectively. We noticed that x-ray diffraction measurements would show the BaF_2 lines slightly shifted and additional unidentified lines would also be present. Unfortunately, we were unable to precisely identify the nature of these spurious lines. Also, x-ray diffraction was unable to qualitatively distinguish between crystalline and amorphous surfaces. We did closely examine the sample crystal that exhibited the two different surface finishes on diamond turning. We cleaved small samples from the two regions and crushed them into a powder. There was no noticeable difference in the two materials.

We also performed energy dispersive spectroscopy (EDS) on a sample and found the strongest signals due to strontium and iodine.

3. Rutherford Backscattering Analysis at Charles Evans & Associates

Three BaF_2 samples were brought to Charles Evans and Associates for Rutherford Backscattering (RBS) analysis. The samples were: 1) the diamond turned piece with the two different surface finishes, 2) the diamond pad polished piece with the 20 angstrom surface finish, and 3) the ion beam milled sample with the three different depths of cut.

Measurements were first made on sample 1) for the two different finish regions. No channeling was observed on either area for this sample, leading us to believe that the crystal surface on the sample is amorphous

The second sample measured was the ion milled sample 3) which had to be broken down to a smaller size to fit in the RBS machine. We opted to look at the 2 micron depth milled portion. In this measurement, strong channeling was observed, indicating a crystalline layer had been exposed. In addition RBS was performed across the sample on a portion of original Chinese surface finish that was masked off. In this region no channeling was observed.

The third sample measured was the standard polished sample 2). Measurements are still in progress on this sample.

A fourth sample, prepared using the diamond pitch polishing method is being measured at this time.

4. UV Reflective Coatings

LLNL regularly coats optics with both reflective and anti-reflective coatings. Magnesium fluoride is typically used for anti-reflective coatings. The reflective coating to be applied to the BaF_2 crystals consists of a thin layer of aluminum (about 500 angstroms) with a MgF_2 over-layer. Reflective coatings of this type exhibit high reflectance, typically 75%-85% down to about 180 nm. In addition the coatings are robust. We utilize an electron beam evaporative coating system specifically designed for the purpose of laying down MgF_2 and aluminum.

We have prepared two different samples for the purpose of characterizing the quality of the reflecting coatings. One sample was a large piece of BaF_2, left with the original Chinese surface finish, about 6 inches long cut from a larger prepared crystal pair. The other sample was a small BaF_2 sample with a high quality surface finish for use a witness sample. This witness sample was used to quantitatively characterize the quality of of the reflective coating.

Measurements were made on the witness sample for both front surface reflectivity and back surface (through the BaF_2) reflectivity. The front surface reflectivity was measured to establish that the coating was of the proper quality. Results of the front surface measurement confirmed that the coating was high quality, with a reflectivity of about 90% from 300 nm to about 220 nm followed by a gradual drop to about 86% at 190 nm. Back surface reflectivity showed that the reflectance was about 87% at 300 nm falling gradually to about 85% at 240 nm with a steeper fall to 74% at 190 nm. At 220 nm the reflectivity is about 81%.

A qualitative look at the large BaF_2 sample shows that surface finish plays an important role in the uniformity of the coating. Pin hole sized areas were observed that were not coated, presumably due to the observed scoring of the crystal surface during the Chinese surface preparation.

These initial samples were coated with uniform reflectance coatings. Gradient coatings will also be studied. Two alternative ways of performing gradient coatings exist. One involves translating the sample past the source at a varying rate. The other involves placing the sample at an angle with respect to an isotropic coating source. It is likely that the translation method will be adopted because it is suitable for long crystals and translation stages are easily programmed for variable motion to allow the deposition of coatings with complex reflection gradients.

The Monte Carlo program LTRANS[3], developed at the Institute for Theoretical and Experimental Physics (ITEP), Moscow is being adapted to model the BaF_2 crystal properties. This Monte Carlo code combines scintillation light emission, crystal transmission, absorption, wall effects and geometric ray tracing to allow an evaluation of the uniformity of light transport to the end of the crystal as a function of position on scintillation light emission. This code can be used to estimate the correct gradient for the surface reflective coating to provide the optimum uniformity along the crystal length.

4. Conclusions

We have performed R&D on four different BaF_2 surface preparation techniques. All the techniques have demonstrated surface finishes better than 20 angstroms RMS. Three techniques: diamond turning, ductile grinding, and diamond pellet lapping hold promise for mass production of large area high quality surface finishes on BaF_2 crystals. Unfortunately, RBS studies show that diamond turning and standard diamond polishing does not provide a crystalline surface.

It is unknown at this time if the surface finish starts out crystalline and then becomes amorphous over time. It has been suggested that Charles Evans & Associates perform an RBS on a freshly cleaved BaF_2 sample and then follow up a few days later to see if a change in the surface is evident.

Ion beam milling is effective for removing BaF_2 surfaces down to a depth of a few microns/hour. In addition, there is an indication that ion milling provides a somewhat crystalline surface. Adapting this technique to mass production is feasible, but the quality of the surface is only as good as the surface one starts with and, in general, is worse than surfaces prepared using various grinding or machining techniques.

Optical coatings for high reflectance in the UV (> 80% at 220 nm) appear to be achievable using standard E-beam evaporative coaters. We also intend to study the effect of applying a hard silicon dioxide overcoat to protect the coatings from damage.

Finally, it is worth reiterating the previously mentioned work comparing laser damage to optical windows prepared using standard polishing techniques and diamond turning. It is likely that this is a surface or near-surface phenomena and is related to stress build-up in the crystal during the polishing technique. Acid etching of surfaces reveal these stresses as micro-cracks, or pits, and acid etching is commonly used as an analytical tool in characterizing laser glass surfaces.

We are currently studying the character of BaF_2 surfaces using acid etching. For example, a sample of BaF_2 was pitch polished to 10 angstroms RMS surface finish and then one half was dipped into an acid solution consisting of 10% hydrofluoric acid, 5% hydrochloric acid and the remainder, water. After 5 minutes the sample was removed and the surface was studied under an optical microscope and a profilometer. The optical observations show small linear scratches indicative of shear stress on the crystal, however the size of the scratches indicates that the stress is small. Also, no pits are observable. The etched surface shows a 35 angstrom RMS finish and appears identical to the adjacent un-etched surface to the naked eye. We have sent this sample to Charles Evans and Associates for RBS analysis of the two surface treatments.

Despite the lack of channeling observed in RBS measurements of some of the samples we have prepared we feel that it is probably worthwhile to explore the radiation hardness of BaF_2 crystals prepared using the various techniques described in this paper.

Barium Fluoride Surface Preparation and UV Coating R&D at LLNL- A Progress Report

Craig R. Wuest
Lawrence Livermore National Laboratory

May 28, 1992

1. Surface Preparation R&D

In our last progress report, dated April 23, 1992, we reported on a number of different polishing techniques that give excellent surface finishes on barium fluoride. These include ion beam milling, diamond machining, diamond pad polishing and diamond pitch wheel polishing. These samples have been analyzed using RBS at Charles Evans and Associates and the results are that ion beam milling gives the best crystalline surface, followed by diamond pitch wheel polishing. The diamond turning method does not appear to give a crystalline surface.

We have continued this work by focusing on the diamond pitch wheel method as the best method in terms of ease of implementation and cost. In addition it is felt that this technology is most easily transferred to our Chinese collaborators. In anticipation of this we have begun a program to fully final-finish the 25 crystal pairs that will be produced in China for the prototype Calorimeter section. This program has involved the interaction of Jack Heck from Oak Ridge National Laboratory with our optics specialist, Ben Fuchs and a designer/draftsman at LLNL to design polishing fixtures to achieve the special shapes that are required in the prototype and at the proper tolerances. Appendix I is a memo from Ben Fuchs and the Designer, Fred Holdener, describing this concept and a plan of work to polish the crystals.

We are preparing to go to the Shanghai Institute of Ceramics as well as other institutions that are deemed necessary by our colleagues in China. Ben Fuchs is now scheduled to leave for Beijing on June 4, arriving on the 5th and I will meet him in Shanghai on June 11. We will both return to the US together on the 13th. It is our desire to educate ourselves as much as possible on the capabilities of the Chinese and to educate the Chinese as much as possible on our polishing process. We expect that this will take more than one trip to accomplish and we are prepared to travel as necessary, given the constraints imposed upon us by the DOE and by LLNL.

2. UV Coating R&D

We have coated a sample of Chinese-finish barium fluoride with aluminum and magnesium fluoride and have determined that the coating is a good reflector of light down to about 180 nm with a reflectance of 81% measured through two air/BaF_2 interfaces at 220

nm. It is clear that surface finish can effect the quality of the coating. The Chinese-finished crystal exhibited pin-holes and a rough texture upon coating due to the poor quality polish. We are currently coating BaF_2 samples that have been prepared using diamond pitch polishing and we will be evaluating the reflectance and scattering behavior of the coating for the purpose of incorporating these parameters into Monte Carlo light transport calculations. Another area of concern is the long term viability of the coating to changes in temperature, humidity, etc. We have begun discussions with coatings experts here at LLNL to understand methods of accelerated aging of coatings to assess the long term integrity.

We have also performed a cost estimate for coating 15,000 crystal pairs. LLNL maintains a number of large (3m x 3m x 3m) evaporative coating systems and we have initiated a study to determine the processing time and procedures required for mass production of coatings.

3. BaF_2 Crystal Growing at LLNL

At the request of Professor Harvey Newman and Dr. Yuri Kamyshkov we are beginning a program to grow small samples of high quality BaF_2 for evaluation and comparison with existing crystals produced in China and elsewhere. We have initiated a program with Dr. W. Kway at LLNL to grow cm sized samples of BaF_2 and have asked Dr. Kway to apply his best effort to growing very pure samples with the goal of demonstrating low impurity contamination and good radiation resistance. Dr. Kway has extensive experience in growing fluorides of various types with and without dopants for laser applications. He has grown BaF_2 in the past and is quite familiar the processing and handling of BaF_2. He has identified a number of sources of high quality BaF_2 powders (Fluortran and Johnson-Massey) and will work with two or three vendors to asses their relative purities. Initial samples will be pre-treated with a reactive gas such as hydrogen fluoride to remove residual moisture and then the material will be zone-refined in a pyrolytically coated vitreous carbon crucible about 2.5 cm wide and 20 cm long. Zone refining is performed in a reactive atmosphere or an inert atmosphere and is a multi-pass process in which impurities migrate to the ends of the crystal melt over time as the melt is passed through an RF heated region at a rate of 1 - 10 mm/hour. Typically these ends are discarded and the good quality crystal from the central region is used.

Tzochowski processing is also available for growing single crystal BaF_2 and can be studied as well. This process is used normally to accurately control the introduction impurity dopants or to keep impurities out during the process. Large single crystals of Gadolinium Germanium Garnet (GGG) with diameters of 4 inches and lengths of about 10 inches have been grown at LLNL in this process.

We anticipate that small samples of high quality BaF_2 will be available by the end of June or early July. We will perform in-house, measurements on impurity levels and also provide samples to Charles Evans and Associates for analysis.

Lawrence Livermore National Laboratory

Barium Fluoride Surface Preparation and UV Coating R&D at LLNL- A Progress Report

Craig R. Wuest, Ben A. Fuchs, W. Kway
Lawrence Livermore National Laboratory

June 30, 1992

1. Surface Preparation R&D

In our last progress report, dated May 28, 1992, we reported that we are concentrating our efforts on a diamond-loaded pitch lapping technique that gives excellent surface finishes on barium fluoride with a relatively simple procedure that is easily transferable to the Chinese manufacturers. Samples have been analyzed using Rutherford Backscattering (RBS) at Charles Evans and Associates and the results have been reported in a paper by Michael D. Strathman, of CE&A dated June 12, 1992. The RBS studies show that one of our particular crystal polish techniques using the standard diamond loaded pitch lapping, followed by a diamond pad wipe with ethylene glycol, provided the best crystalline surface. Additionally, we have analyzed a sample using Atomic Force Microscopy (AFM) at LLNL and the results are consistent with optical measurements made on samples, indicating an RMS surface finish of between 10 and 20 angstroms.

Also, last month, we reported on efforts to polish a full 25 crystal pairs using specially fabricated polishing fixtures at LLNL. We have continued this work by finalizing a set of mechanical drawings to specify these polishing fixtures. At this time the drawings are in final review and will be submitted to a number of outside machine shops for bids in the next week. Jack Heck from Oak Ridge National Laboratory has been working closely with our optics specialist, Ben Fuchs and a designer/draftsman at LLNL to design polishing fixtures to achieve the special shapes that are required in the prototype and at the proper tolerances. A meeting between Jack and Ben and other members of the BaF_2 collaboration occurred at Brookhaven National Laboratory on June 17, 1992 as part of the Calorimeter meeting and Ben Fuchs also delivered a presentation on our work to the Calorimeter group on June 18.

We are still preparing to go to the Beijing Glass Research Institute, Tsing Hua University, the Zhongnan Optical Instrument Factory and the Shanghai Institute of Ceramics. It has been very difficult to arrange this trip and we have had to postpone once because of a difficulty in getting approval for our trip from the US Department of Energy. We are now planning the following: Craig Wuest will travel to China on July 4 with Michel Lebeau. We will visit all the above institutions and return on the 16th of July. Ben Fuchs and Jack Heck will likely follow with a trip to China later in July or early August. As of this writing the approval process is nearing completion for Craig Wuest and is still in progress for Ben Fuchs.

In the mean time, as a result of Jack Heck's and Renyuan Zhu's trip to China last month, a crystal pair has been cut to Jack's new specifications and air-mailed to LLNL for evaluation. We are still awaiting the receipt of this crystal pair. We have also stressed in fax messages to the Chinese that they should begin manufacturing crystal pairs as soon as possible because the crystal polishing process requires a set of 5 pairs to be polished at the same time. Appendix I gives a schedule for the surface preparation and polishing program at LLNL.

Finally, Renyuan Zhu has sent us two small 2.54 cm cylinders of BaF_2 for Ben to polish and return to CalTech for radiation damage studies. This work wil l be done this week.

2. UV Coating R&D

We are currently coating BaF_2 samples that have been prepared using diamond pitch polishing and we will be evaluating the reflectance and scattering behavior of the coating for the purpose of incorporating these parameters into Monte Carlo light transport calculations. We have also begun providing data to Ken Read of Oak Ridge National Laboratory who is coordinating the Monte Carlo effort. As a result of our inquiries regarding coatings, a number of people will be making contributions. One chemist will be studying long term aging effects of the coatings, another physicist maintains a program to study thin film dielectrics and can provide us with theoretical curves for reflectance and transmittance as a function of angle and wavelength for different coatings.

We expect to have a second estimate of coatings costs from an outside vendor to compare with our internal coatings estimate some time this week.

Our summer students have begun their program to measure crystal light transport properties using a CsTe photomultiplier tube coupled to an older 50 cm long BaF_2 crystal pair. Initial measurements have been made to determine the PMT characteristics and a program will be carried out over the next two week to measure a number of different surface finishes, capped off by a measurement of a full evaporative-deposited Al/Silica coating to be provided by SpectraPhysics. We expect to deliver a single 50 cm crystal to SpectraPhysics on the week of July 13th. The measurement of the coated crystal will be made in late July. All data will be provided to the ORNL Monte Carlo group for the purpose of benchmarking the LTRANS code.

3. BaF_2 Crystal Growing at LLNL

Our program with Mr. W. Kway at LLNL to grow cm sized samples of ultra-pure BaF_2 is progressing well. We have now ordered samples of high quality BaF_2 from a number of sources. We have also placed an order for a new Pt/Ir furnace tube to allow zone-refining processing of the BaF_2. Appendix II details the crystal growing program and schedule for the summer.

Appendix I

BaF2 Surface Preparation R&D Program Schedule

We assume that the Chinese collaborators will begin providing machined crystals through the summer in order that 5 crystal pairs are available to begin polishing in late August.

June 1 - June 22	Start crystal tooling design/detail
June 22 - June 29	Review and approve detailed drawings for polishing fixtures
June 29 - July 20	Send out job order for bids on fabrication and begin fabrication
July 20 - August 26	Fabricate hardware, inspect and accept tooling hardware
August 26 - Sept 30	Begin polishing crystals pairs

Appendix II

LLNL Program to Process and Grow Ultra-pure Crystals of Barium Fluoride

Summary:

The objective of this short series of experiments is to grow BaF_2 cyrstals of the highest purity and evaluate radiation damage as compared with other known samples, including samples from Optovac, and from the Shanghai Institute of Ceramics. The program consists of the following:

1. Growing crystals by the Czochralski (CZ) method from a high purity (Fiber Grade) melt with and without the additives of NH_4HF_2 and CF_4 (the NH_4HF_2 is added to provide a defined amount of HF in a short duration and the CF_4 is used to remove the residual OF^{3-} or OHF^{2-} which may be present in the starting material).

2. Growing crystals by the zone-melting (ZM) method which will zone-refine to eliminate or lessen the metallic impurities as well as F^- vacancies.

3. The use of a reactive gas atmosphere processing (RAP) cycle with HF as the reactive gas prior to the growth process (this cycle is used to remove all adsorbed H_20, oxides, and the oxy- and hydroxy-fluoride species.

4. If time permits, growing by the CZ method from melt prepared by both RAP and zone-refining to obtain both high purity and superior structural quality crystals.

5. Crystals will be evaluated for purity at LLNL and at Charles Evans and Associates. Radiation damage tests will be performed at Cal Tech.

Schedule:

	Material	Estimated Compl. Date
1. Czochralski (CZ) growth of single crystals with dimension of ~ 25 mm dia. x 50 mm length; crucible: Pt; atmosphere: 5-9 purity argon (will compare with NH_4HF_2 and CF_4 additives as RAP agents).	BDH Fiber Grade	7/17/92
2. Zone-melting (ZM) growth of single crystal; boat: Pt and coated graphite; atm: 5-9 Ar.	Same as above	7/24/92
3. Reactive atmosphere processing (RAP) of powdered BaF_2 (as received from vendor); RAP temp.: 1,000°C; boat: Pt; atm: HF; time: 4 hrs. at RAP temp.	GFI Optical Grade	7/24/92
4. Zone-refining and ZM single crystal growth of RAP'd mat'l; boat: Pt; atm: 5-9 Ar.	RAP'd GFI Mat'l	7/31/92
5. Zone-refining and ZM single crystal growth of RAP'd mat'l; boat: coated graphite; atm.: 5-9 Ar.	Same as above	8/7/92

Project Cost Estimate:

1. CZ growth:	W. Kway	40 hrs
2. ZM growth:	J. Tassano	20 hrs
3. RAP purification:	J. Tassano	20 hrs
4. Zone-refining and ZM growth (proc. 4&5)	J. Tassano	30 hrs
5. Misc. time to be spent on all RAP and ZM exp'ts. (proc. 2-5):	W. Kway	20 hrs
	Total:	130 hrs*

Est. Total Labor Cost:	$10.4K
S&E: Chemicals:	$1.9K
Total Project Cost:	**$12.3K**

1. Surface Preparation and Analysis

Surface preparation is critical to the performance of barium fluoride crystals for a number of reasons. First, an improperly prepared (machined, ground, polished, lapped) crystal suffers from induced stresses and deformations in the first few hundred microns of the surface. These stresses can manifest themselves in the formation of cracks (crazing) over time, or more quickly when subjected to extremes of heat, radiation, humidity, etc.. Surface stresses can be minimized using well-known polishing and lapping techniques that gently bring the surface to a final finish. These techniques have been developed at LLNL for barium fluoride and will be discussed in further detail. Also, improper surface preparation can introduce contaminants into the surface of the crystal. Under certain conditions these contaminants can migrate into the bulk of the crystal and cause extended areas of radiation softness.

Improperly prepared surfaces are easily identified under optical microscopy, and other analysis techniques such as Rutherford Backscattering (RBS). In the case of RBS helium ions bombard the surface and can channel into the crystal preferentially along the crystal planes. If the surface of the crystal is amorphous, no preferential backscattering is observed. If the crystal surface is crystalline, the crystal lattice is readily identified as peaks in the backscattering number. Figures accompanying this section show results for crystals prepared at LLNL using improper and proper polishing methods.

A number of surface preparation techniques were explored at LLNL, including ion beam milling, diamond turning, and various polishing/lapping techniques. In terms of surface finish, diamond-turned surfaces are the best with 6 Å RMS demonstrated. However, RBS analysis of diamond-turned surfaces reveal that they are amorphous. Ion beam milling provides the best crystalline surface, however the uniformity of the surface and the finish is not very good.

A polishing technique known as pitch lapping with diamond grit, provides the best combination of surface finish (10-20 Å RMS) and a crystalline surface. The technique is applied after more standard polishing techniques and is a simple wheel (lap) prepared with a low melting temperature synthetic pitch. Grooves are formed in the pitch in a pattern to allow cutting fluids, grits and ground material to be washed away during the lapping process. The key to the process is a grit of very uniformly sized diamond, typically 1/2 μm or 1/4 μm diameter, imbedded in the pitch. In addition, a non-aqueous cutting fluid such as low viscosity silicon oil, or ethylene glycol is used to uniformly disperse the diamond and to carry away waste material. Water is not a good fluid for diamond because of the tendency of diamond to agglomerate in water. Water is also not desirable because of the slight solubility of barium fluoride in water.

A number of photographs of polished surfaces from Shanghai Institute of Ceramics, Zhongnan Optical Instrument Factory and LLNL accompany this section to illustrate these points. Also, analysis of the polished surfaces has been performed using Atomic Force Microscopy (AFM). This analysis supports optical measurements and also provides insights into the mechanics of the polishing technique. A series of AFM photographs is included in this section.

In order to better understand the effects of surface polish on radiation damage in barium fluoride, a set of small crystal samples have been polished at SIC then irradiated and characterized. These crystals were then annealed to remove the radiation damage and then polished at LLNL using our improved polishing techniques. These crystals have been returned to CIT for irradiation and analysis.

The polishing techniques developed at LLNL are simple to implement and are essentially extensions of standard polishing techniques already in practice in the US and in China. We feel that these techniques are easily transferred to the Chinese for large scale production and incur little added cost to the overall production of finished crystals. LLNL engineers and physicists (Fuchs and Wuest) have visited or will visit China to work with the Chinese to develop this capability.

LLNL has also designed and is currently fabricating a set of special polishing fixtures that allow up to 5 crystal halves or pairs to be polished at the same time. These fixtures will be completed in August and will be used to demonstrate the technique of multiple polishing. It is expected that flatness can be maintained across the full 25 cm x 25 cm area of grouped crystal halves at the level of a fraction of a wavelength of visible light. Also surface finish can be maintained to about 20 Å. Figures and sketches of these polishing fixtures accompany this section. These fixtures are again easily adapted to existing techniques and machines in the US and China. It is anticipated that these techniques would be provided to the Chinese for mass production of crystal pairs. Also, accompanying this section is a step-by-step documentation describing the crystal machining/grinding/polishing/lapping in detail, with a set of sketches to illustrate the techniques. Finally, a set of summary viewgraphs including timelines for various tasks is presented.

BaF2 Surface Preparation and Analysis

- Continued work with diamond-loaded pitch lapping method:
  - RBS results validate pitch lapping process for BaF2.
  - Small lapping wheel prepared for demonstrations in China.
  - Atomic Force Microscopy (AFM) on polished sample.
- ORNL-specified mechanical tolerances have been designed into polishing procedures and fixtures at LLNL:
  - Design and fabrication of polishing blocks and fixtures is proceeding at LLNL.
  - Fully machined crystal from Zhongnan Optical Instrument Factory to be delivered to LLNL for coordinate measuring and analysis.
  - Interaction with BGRI, SIC and Zhongnan to transfer technology for proper machining and polishing to specifications.
- Trips to Beijing, Zhicheng City, Hubei province, and Shanghai planned - early July and early August.
  - M. Lebeau and C. Wuest to meet with SIC, BGRI, Zhongnan Optical Instrument Factory
  - Evaluate Chinese technology and equipment.
  - Suggest LLNL-developed polishing methods and begin discussions on adapting existing polishing machines to new methods.
  - B. Fuchs and J. Heck to visit China in late July or early August.

BaF2 Surface Preparation and Analysis

Milestones:

July 1:
1. Choice of polishing technology fixed - diamond-loaded pitch lapping technique
2. Polishing fixtures designed and mechanical drawings complete.
3. Validation of surface finish with optical, AFM and RBS analysis complete.
4. First crystal pair received from Zhongnan Optical Instrument Factory.

July 7:
1. Bids solicited and received for polishing fixture fabrication.
2. Begin analysis of glues and joint motion/creep during polishing process.
3. Polish small samples of new BaF2 from China with LLNL process and return to CalTech for radiation damage analysis.

Aug. 1:
1. First polishing fixtures received. Other fixtures in fabrication.
2. China trip by C. Wuest and M. Lebeau complete.
3. Additional crystal pairs received from China.

Aug. 9:
1. All polishing fixtures completed and delivered to LLNL.
2. Trip by B. Fuchs and J. Heck planned August 13.
3. First batch of crystals nearing completion at Zhongnan Factory.
4. Polishing begins on crystals.
5. Gluing begins on crystals.

Sept. 2:
1. China trip by Fuchs and Heck completed on August 26.
2. Polishing nearing completion on 5 crystal pairs.

Subsurface damage is typically found in three layers

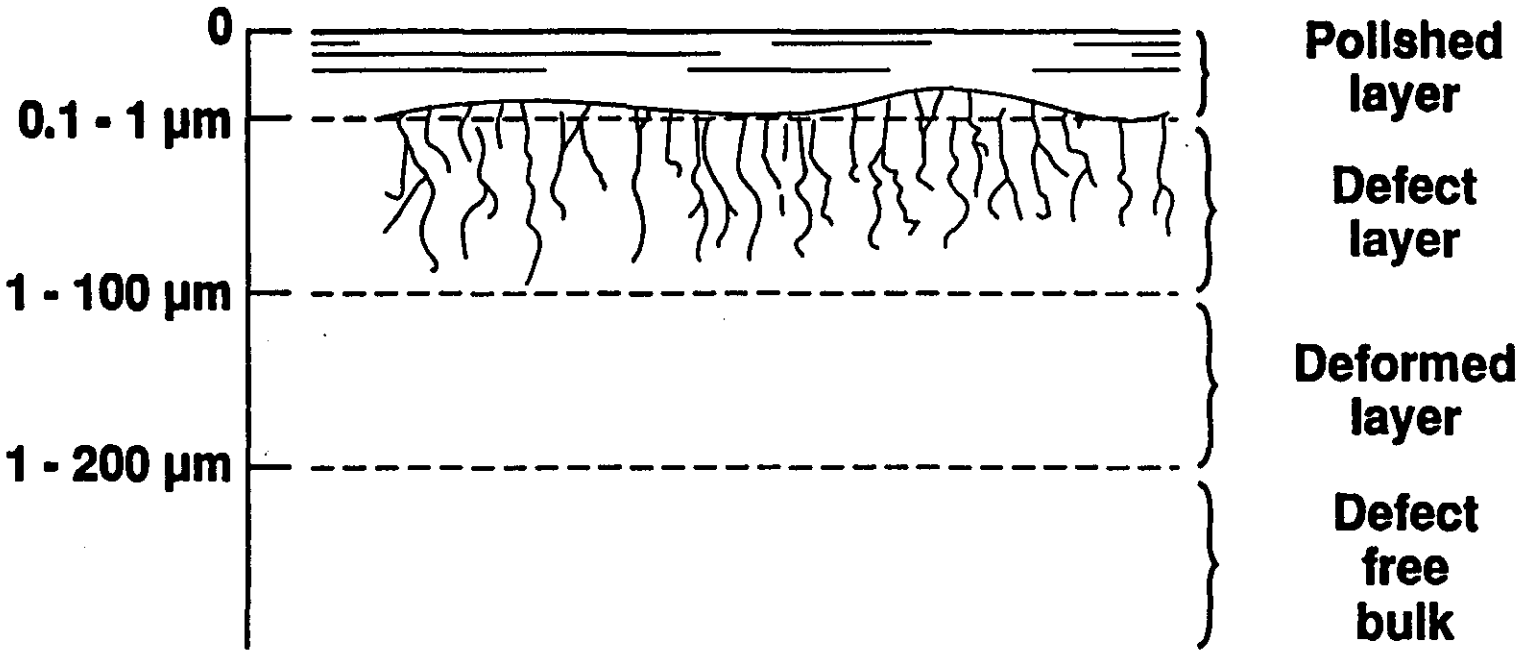

RC-021-U-0037-001

The two photographs compare BaF2 crystal surfaces under x179 magnification. The first photograph shows the crystal surface as prepared at the Shanghai Institute of Ceramics. The surface roughness is about 200 Å RMS in the areas between the large gouges. Note also that the gouges terminate in blobs of material, presumably polishing compound mixed with BaF_2 particles. The second photograph shows a BaF_2 surface that was diamond-turned at LLNL using a single diamond bit on a lathe. The surface exhibits different roughness in the two different crystal grains and the boundary of the grain is clearly discernable.

Barium Fluoride Calorimeter R&D

BaF2 crystal surface as provided by SIC - 200 Å RMS

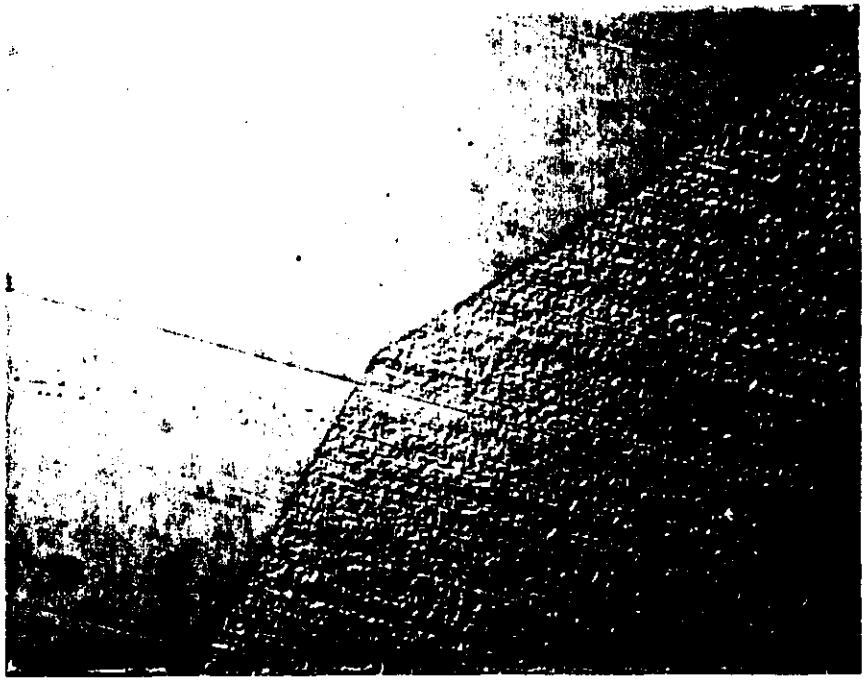

Diamond Turned Sample
6 Å RMS/80 Å RMS

The next two sets of figures are Rutherford Backscattering Analysis scans made by M. Strathman of Charles Evans and Associates. Two different samples of BaF_2 were examined. The first sample is an LLNL polished BaF_2 crystal. It was polished using the standard diamond loaded pitch lap as a final polish to a finish of about 20 Å RMS. Half of the crystal was then etched in a 5% HF, 10% HCl aqueous solution for about 5 minutes. The sample was then rinsed with distilled water. In these figures, no crystal structure is discernable, implying an amorphous layer at the surface. The next two figures show a different sample polished with the same technique, with an additional 20 minute polish using a diamond loaded pad and ethylene glycol. No acid etch was performed. The two RBS scans are for the same crystal with different orientations with respect to the helium beam. Good crystal structure is seen at the surface of the crystal in this case.

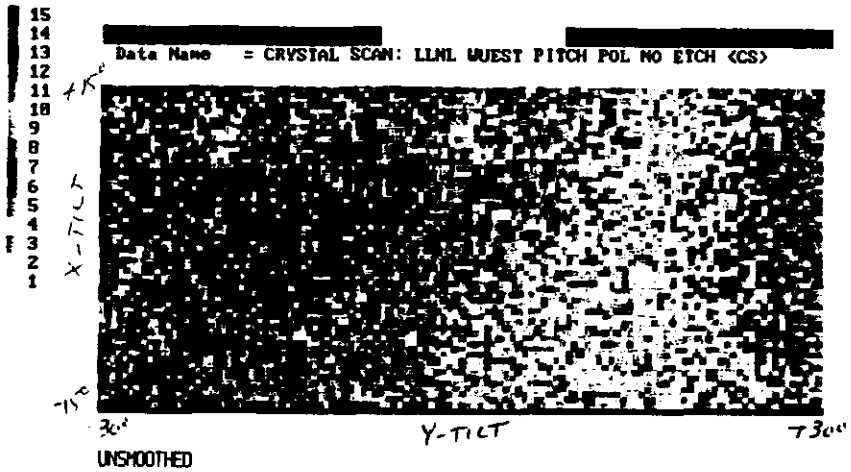
Data Name = CRYSTAL SCAN: LLNL WUEST PITCH POL NO ETCH (CS)
15 14 13 12 11 10 9 8 7 6 5 4 3 2 1
X-TILT
Y-TILT
UNSMOOTHED

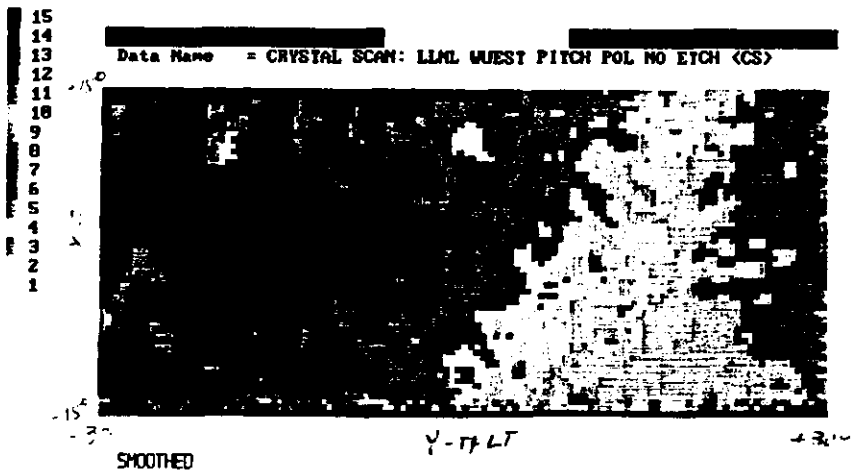
Data Name = CRYSTAL SCAN: LLNL WUEST PITCH POL NO ETCH (CS)
15 14 13 12 11 10 9 8 7 6 5 4 3 2 1
Y-TILT
SMOOTHED

Fig #1

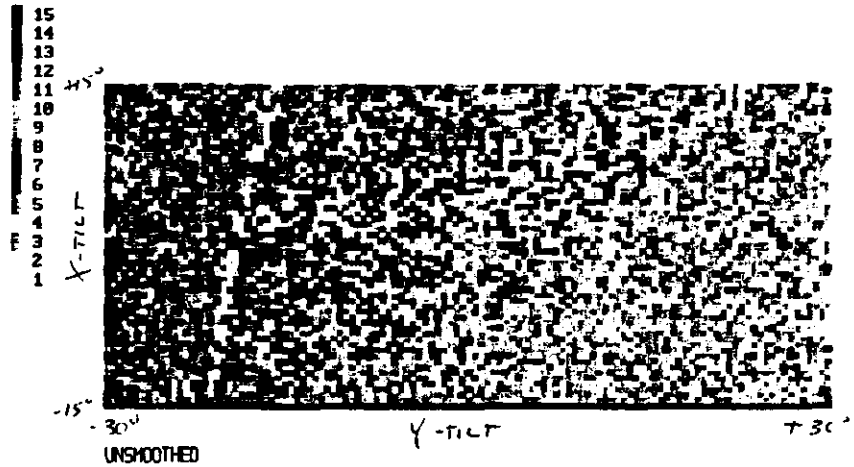
15 14 13 12 11 10 9 8 7 6 5 4 3 2 1
X-TILT
Y-TILT
UNSMOOTHED

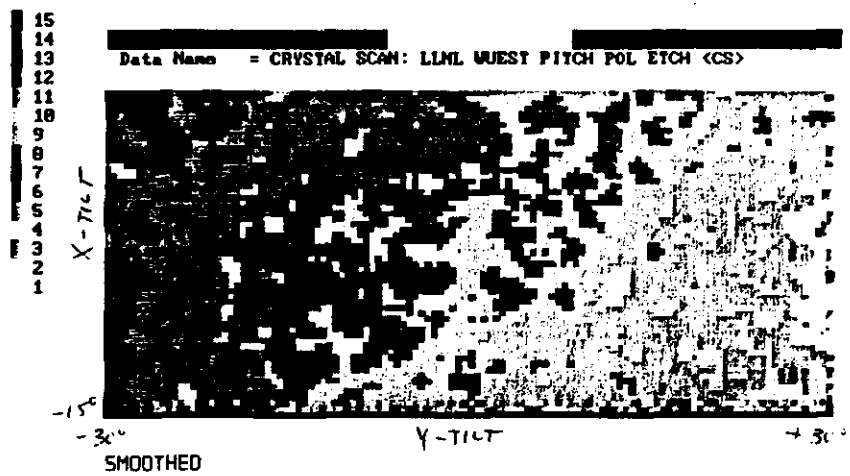
Data Name = CRYSTAL SCAN: LLNL WUEST PITCH POL ETCH (CS)
15 14 13 12 11 10 9 8 7 6 5 4 3 2 1
X-TILT
Y-TILT
SMOOTHED

Fig #2

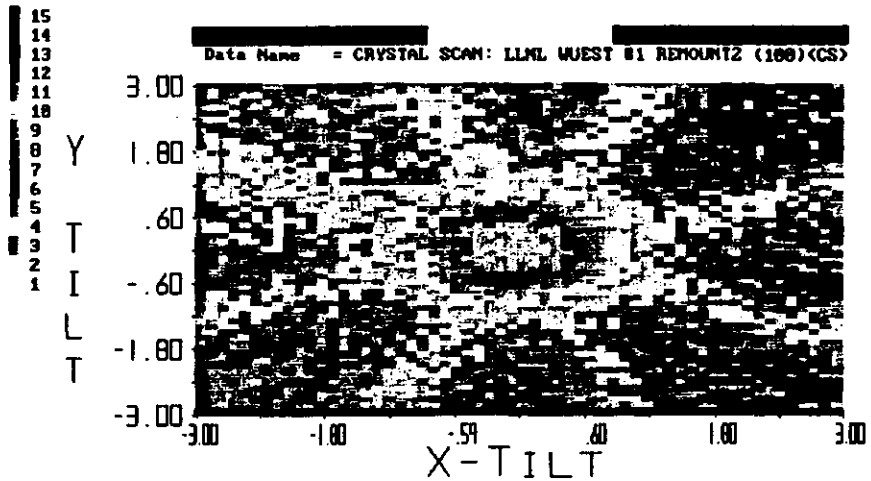
Data Name = CRYSTAL SCAN: LLNL WUEST #1 REMOUNT2 (100)(CS)
Y TILT
3.00
1.80
.60
-.60
-1.80
-3.00
-3.00
-1.80
-.59
.60
1.80
3.00
X-TILT

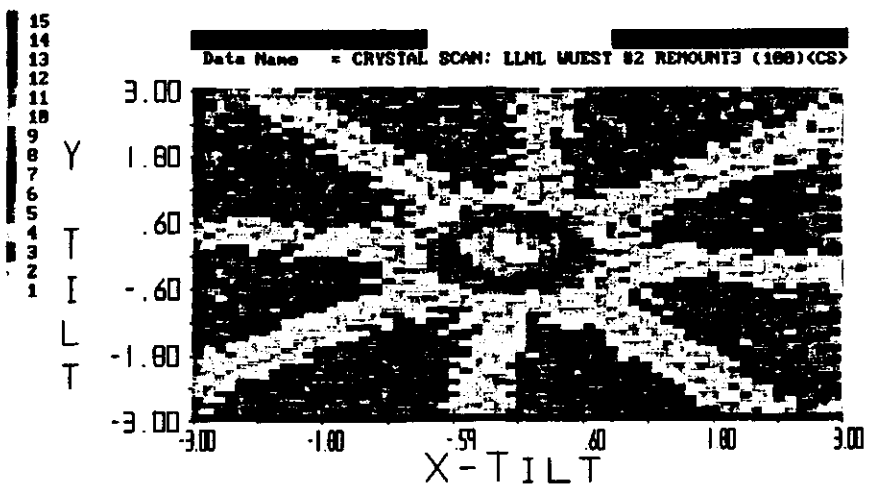
Data Name = CRYSTAL SCAN: LLNL WUEST #2 REMOUNT3 (100)(CS)
Y TILT
3.00
1.80
.60
-.60
-1.80
-3.00
-3.00
-1.80
-.59
.60
1.80
3.00
X-TILT

Fig #4

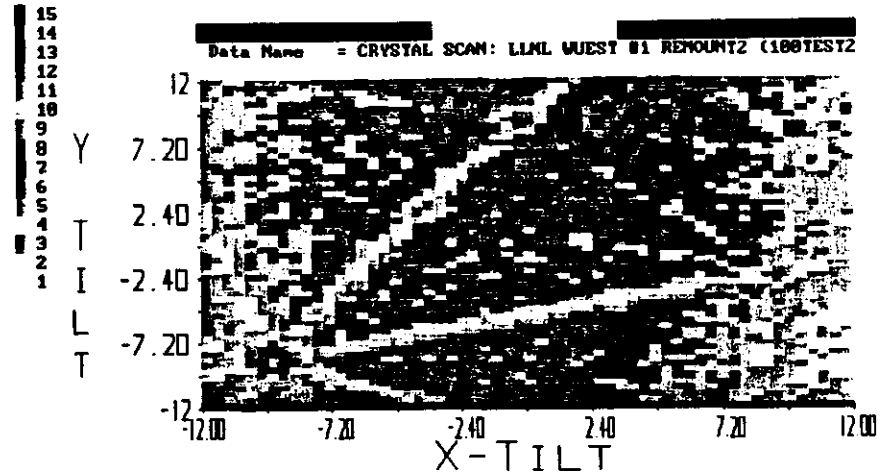
Data Name = CRYSTAL SCAN: LLNL WUEST #1 REMOUNT2 (100TEST2
Y TILT
12
7.20
2.40
-2.40
-7.20
-12
-12.00
-7.20
-2.40
2.40
7.20
12.00
X-TILT

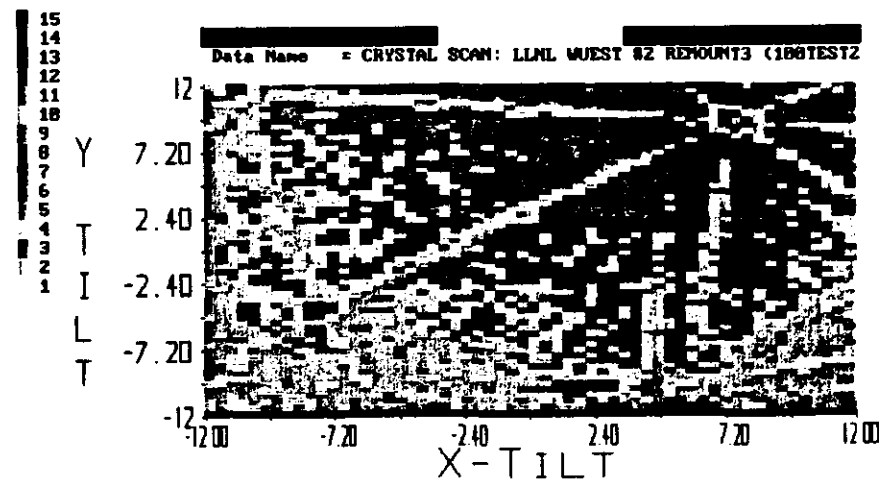
Data Name = CRYSTAL SCAN: LLNL WUEST #2 REMOUNT3 (100TEST2
Y TILT
12
7.20
2.40
-2.40
-7.20
-12
-12.00
-7.20
-2.40
2.40
7.20
12.00
X-TILT

Fig #3

Photographs comparing surface finishes on BaF_2 crystals. The surface on the left is a polished surface from the process used by the Zhongnan Optical Instrument Factory. This surface is an improvement over the polish obtained from the Shanghai Institute of Ceramics. However, many inclusions are visible and are most likely contaminants introduced into the surface from poor quality polishing fluids and compounds. The photograph on the right shows an LLNL polished surface under the same magnification (x179).

BaF2 Surface Preparation and Analysis

X 179

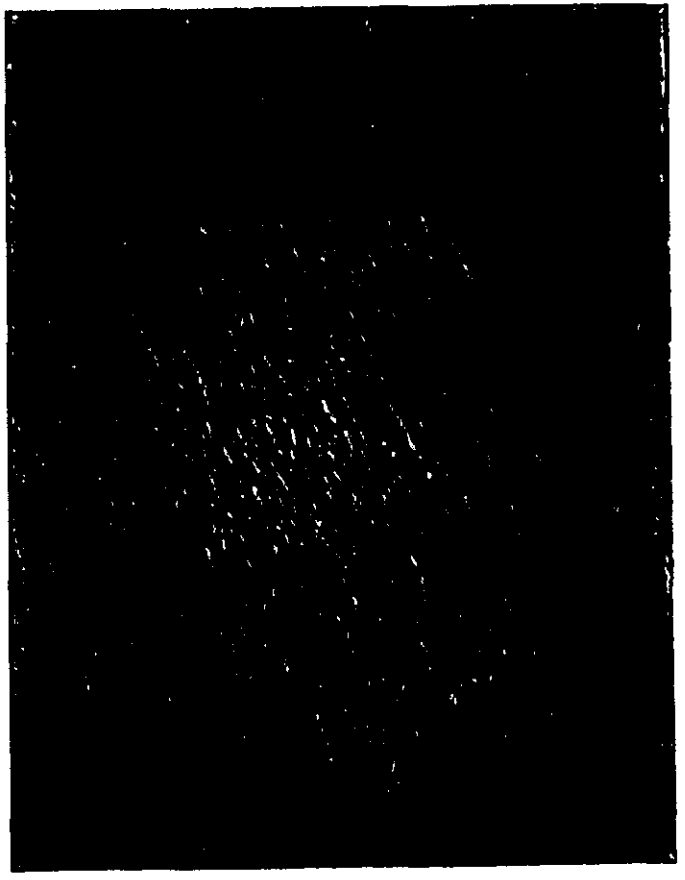

Surface Finish of BaF2
Zhongnan Optical Factory
Polish

X179

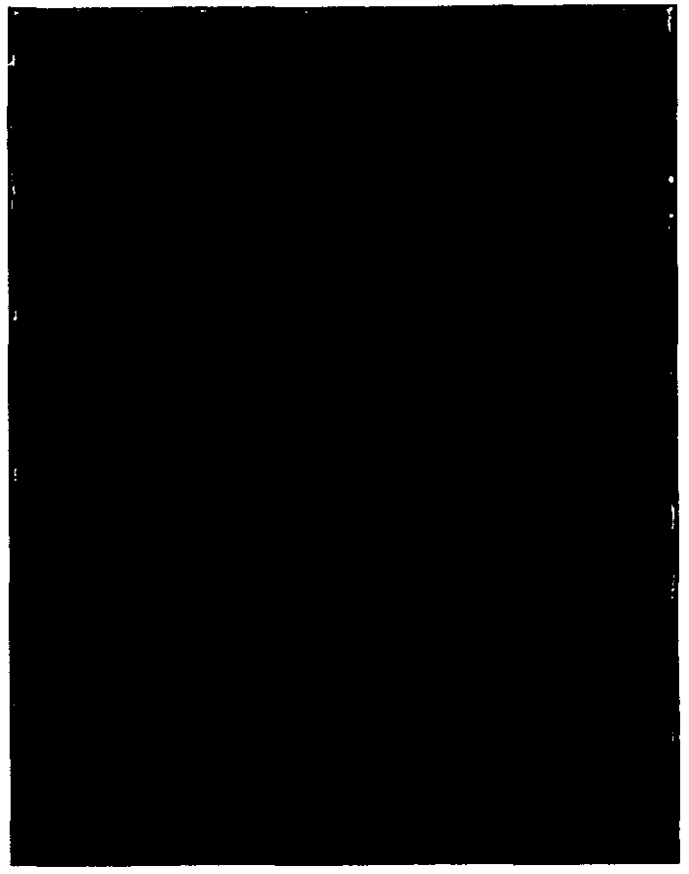

Surface Finish of BaF2
LLNL Polish

Interferograms of two different BaF_2 surfaces showing the flatness. The first photograph shows a 4 cm x 4 cm surface polished at the Shanghai Institute of Ceramics. Especially noticeable is the round-off of the edges and the general convex shape of the surface. The next photograph shows a similar sized crystal ground and polished flat at LLNL. The accompanying scan shows that the peak-valley height is about 63 nm. Also, the surface is concave in one dimension. This is desirable for mating surfaces together for gluing.

BaF2 Surface Preparation and Polishing

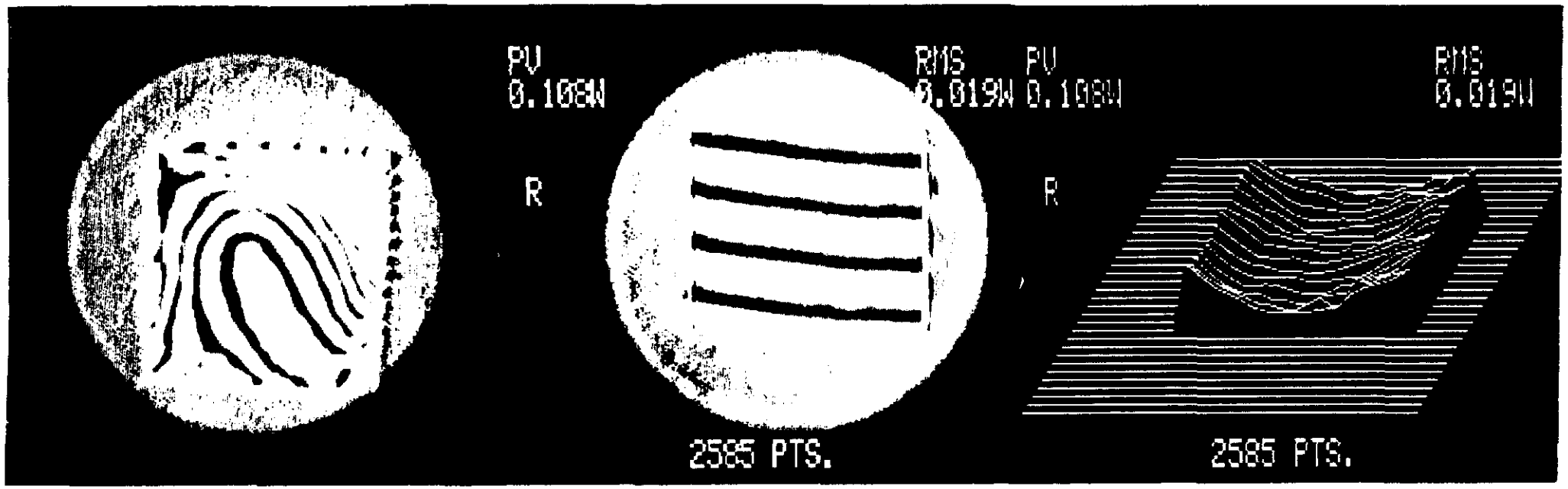

Chinese-finish on
4 cm x 4 cm
crystal end face

LLNL-finish on
4 cm x 3 cm cut
BaF2 sample

Surface scan of
LLNL-finished
sample: 0.108 λ P-V
@ 633 nm

The next few pictures show Atomic Force Microscope pictures of an LLNL polished BaF_2 surface. The color of the surface is coded to represent height. Typical "scratches" are about 6 nm (60 Å) peak-valley. Typical RMS surface finish is about 1.4 nm (Å). Scans are represented by white lines across the area of the surface. Red and green color coded data corresponds to the area between the red or green cursors on the scans. Two sets of magnifications are provided - 50 μm x 50 μm (about x1000 magnification) and 10 μm x 10 μm (about x5000 magnification).

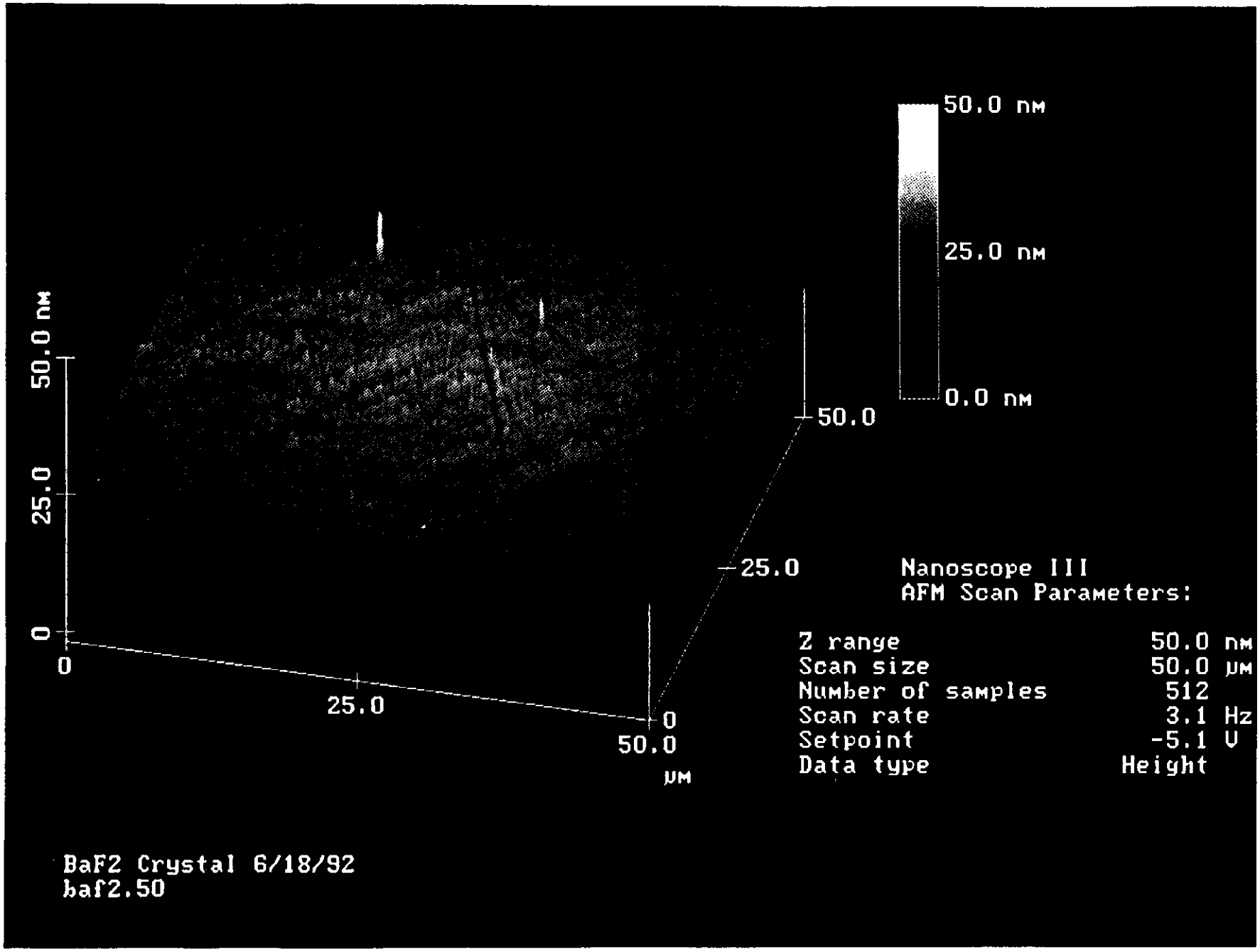
50.0 nm
25.0 nm
0.0 nm
50.0 nm
25.0
0
0
25.0
50.0
µm
0
25.0
50.0
Nanoscope III
AFM Scan Parameters:
Z range 50.0 nm
Scan size 50.0 µm
Number of samples 512
Scan rate 3.1 Hz
Setpoint -5.1 V
Data type Height
BaF2 Crystal 6/18/92
baf2.50

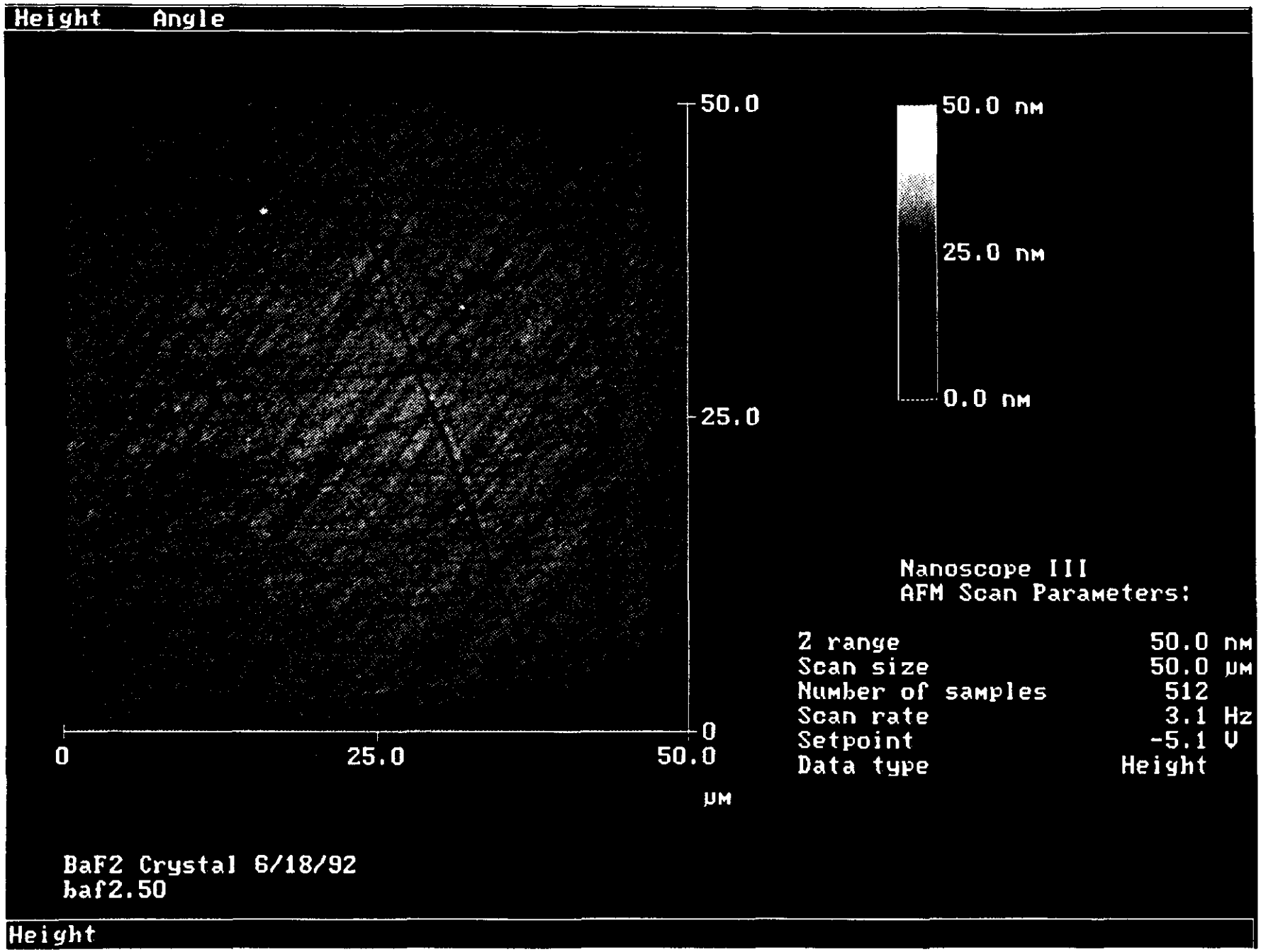
Height Angle
50.0
25.0
0
0
25.0
50.0
µm
50.0 nm
25.0 nm
0.0 nm
Nanoscope III
AFM Scan Parameters:
Z range 50.0 nm
Scan size 50.0 µm
Number of samples 512
Scan rate 3.1 Hz
Setpoint -5.1 V
Data type Height
BaF2 Crystal 6/18/92
baf2.50
Height

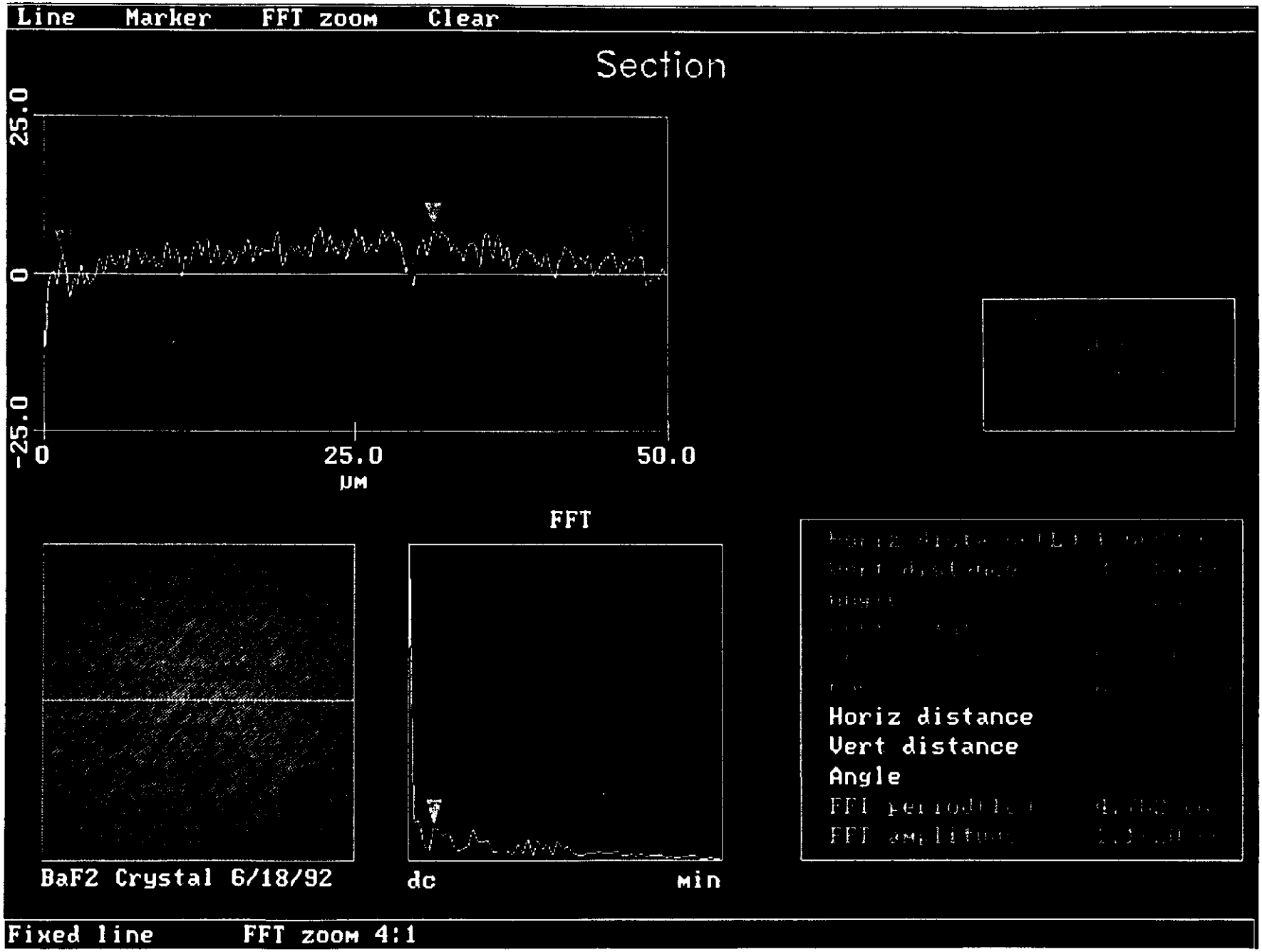
Line
Marker
FFT zoom
Clear
Section
25.0
0
-25.0
0
25.0
50.0
µm
FFT
BaF2 Crystal 6/18/92
dc
min
Horiz distance
Vert distance
Angle
Fixed line
FFT zoom 4:1

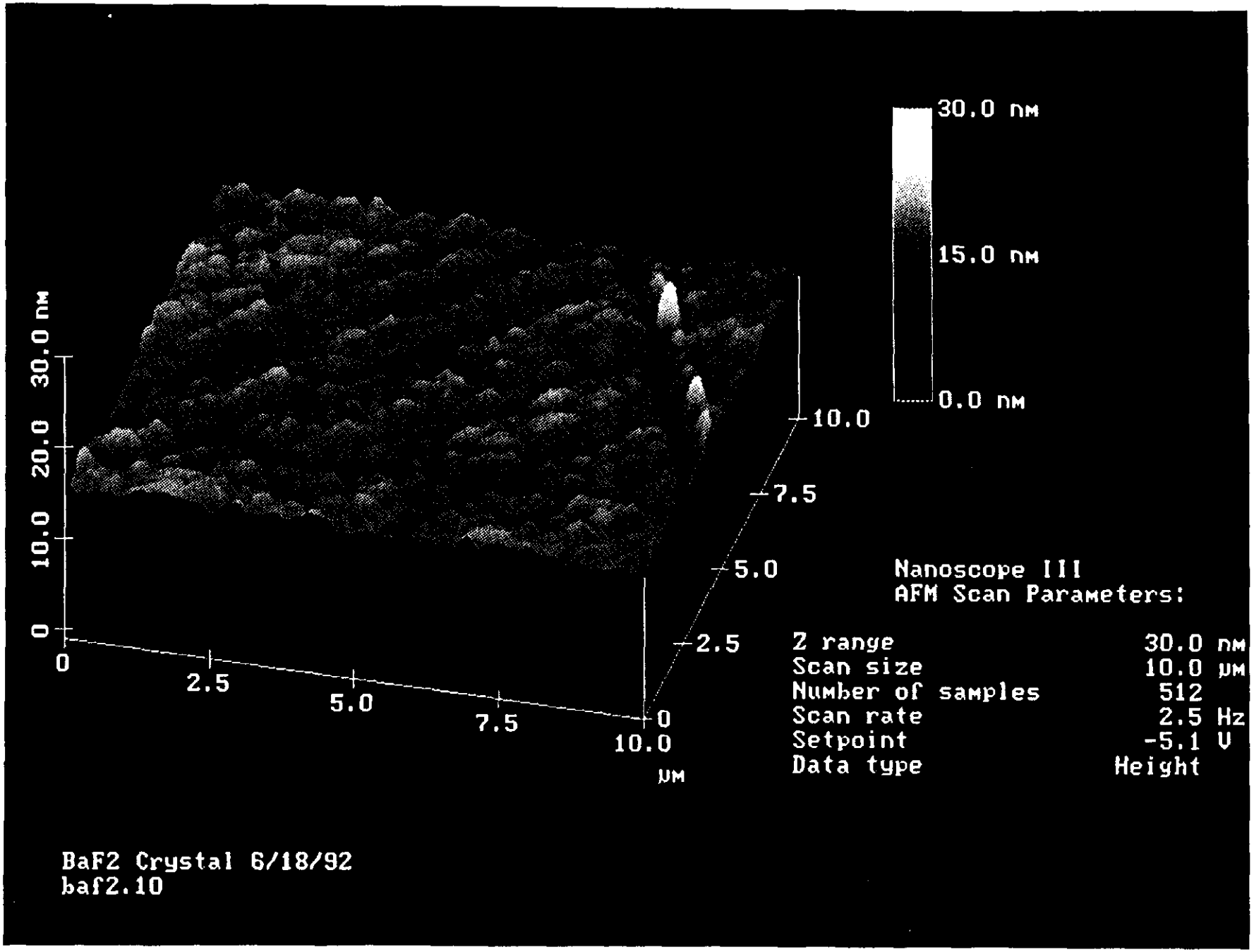
30.0 nm
15.0 nm
0.0 nm
30.0 nm
20.0
10.0
0
0
2.5
5.0
7.5
10.0
µm
10.0
7.5
5.0
2.5
0
Nanoscope III
AFM Scan Parameters:
Z range 30.0 nm
Scan size 10.0 µm
Number of samples 512
Scan rate 2.5 Hz
Setpoint -5.1 V
Data type Height
BaF2 Crystal 6/18/92
baf2.10

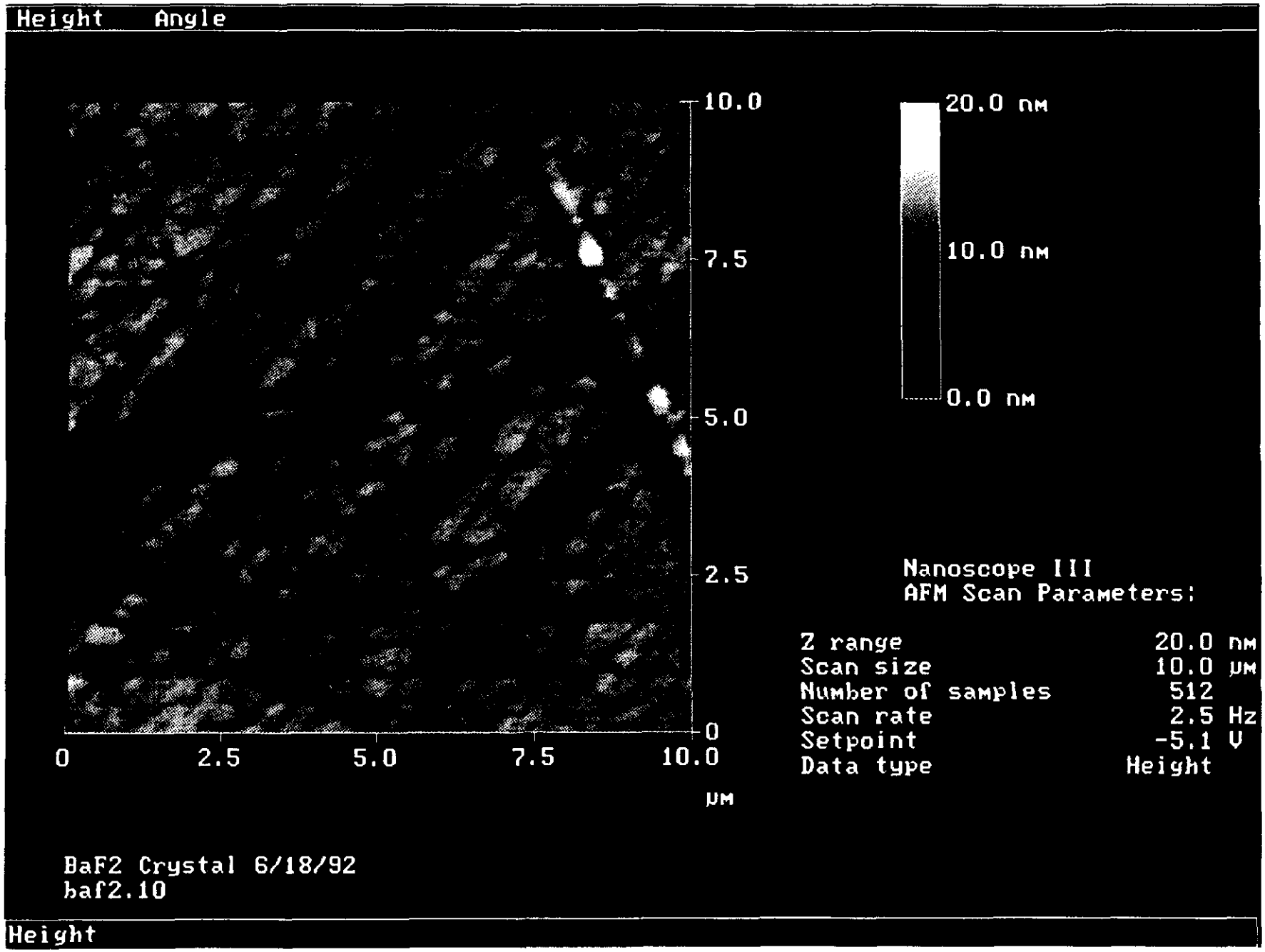
Height Angle
10.0
7.5
5.0
2.5
0
0
2.5
5.0
7.5
10.0
µm
20.0 nm
10.0 nm
0.0 nm
Nanoscope III
AFM Scan Parameters:
Z range 20.0 nm
Scan size 10.0 µm
Number of samples 512
Scan rate 2.5 Hz
Setpoint -5.1 V
Data type Height
BaF2 Crystal 6/18/92
baf2.10
Height

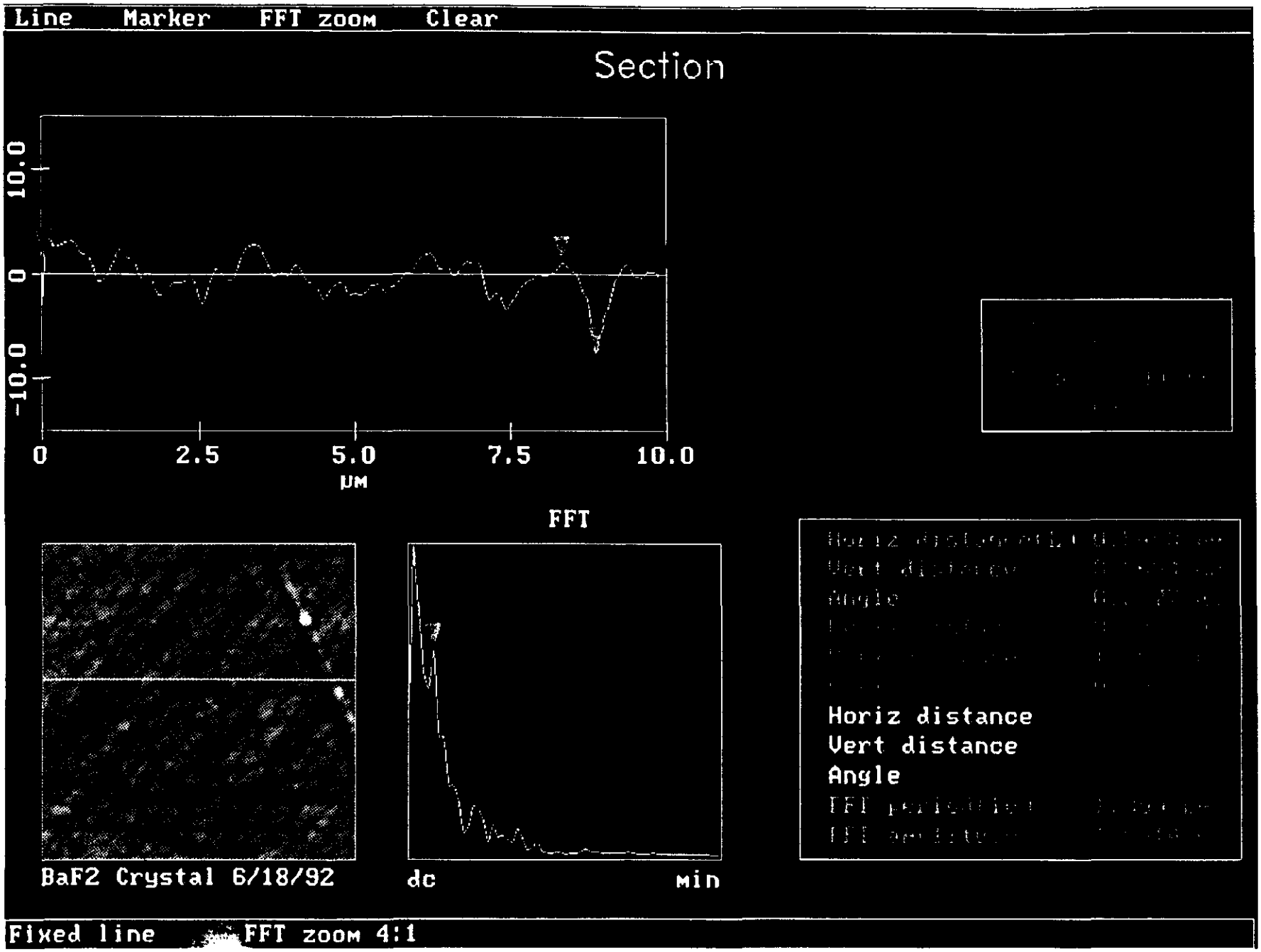
Line Marker FFT zoom Clear
Section
10.0
0
-10.0
0
2.5
5.0
7.5
10.0
µM
FFT
BaF2 Crystal 6/18/92
dc
min
Horiz distance
Vert distance
Angle
Fixed line
FFT zoom 4:1

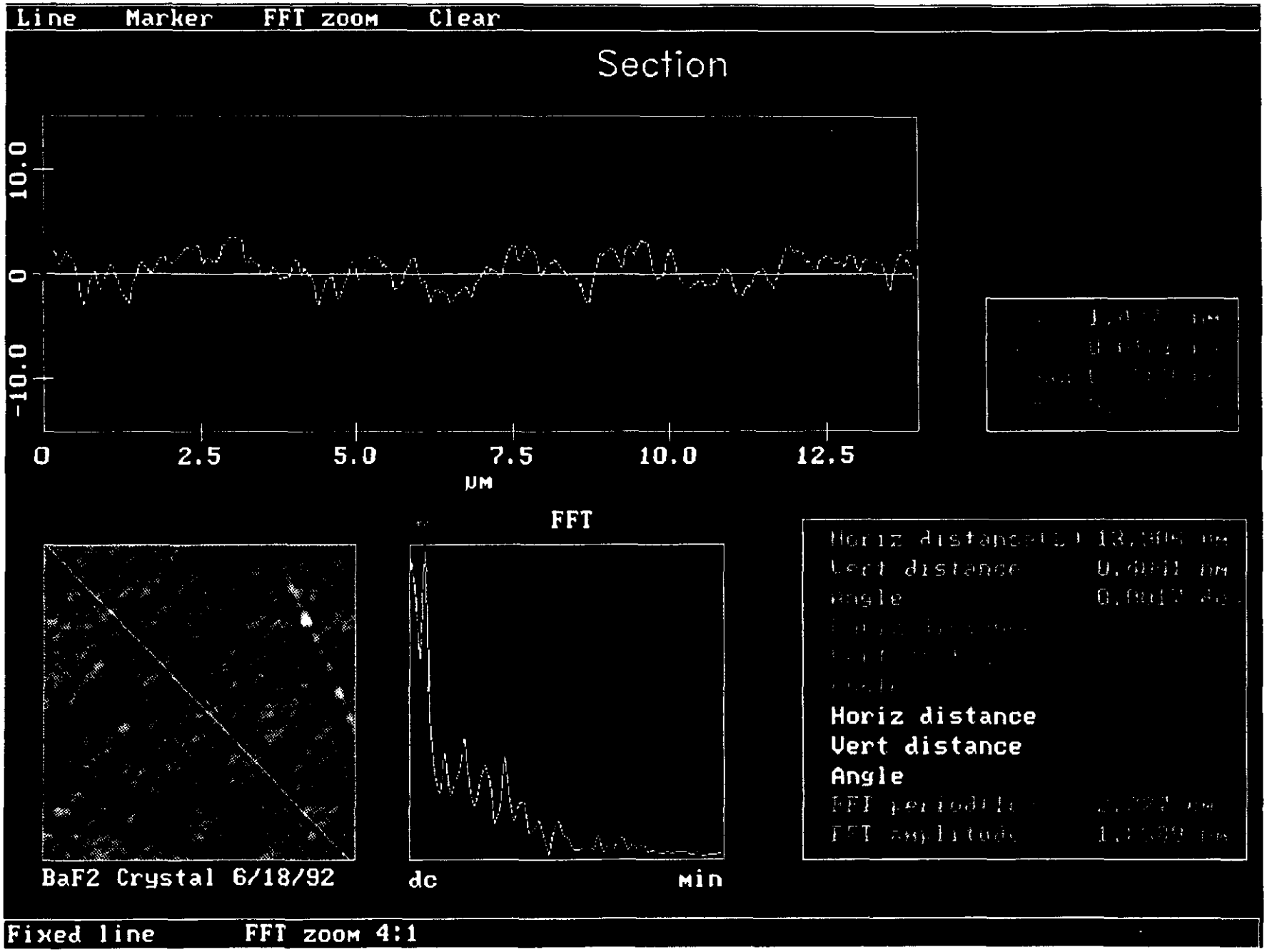
Line Marker FFT zoom Clear
Section
10.0
0
-10.0
0
2.5
5.0
7.5
10.0
12.5
µm
FFT
Horiz distance
Vert distance
Angle
BaF2 Crystal 6/18/92
dc
min
Fixed line FFT zoom 4:1

A polishing/lapping machine at LLNL. A pitch lap is mounted on the lower turntable spindle. Parts can be attached to an arm above the turntable which swings back and forth across the rotating lap. This procedure can be easily reversed to mount the lap on the top swing-arm and the polishing fixture containing the crystals on the turntable. Rotation rate and swing speed and range can be adjusted to control surface flatness. Simpler versions of these machines exist in China at Shanghai Institute of Ceramics, Beijing Glass Research Institute and the Zhongnan Optical Instrument Factory.

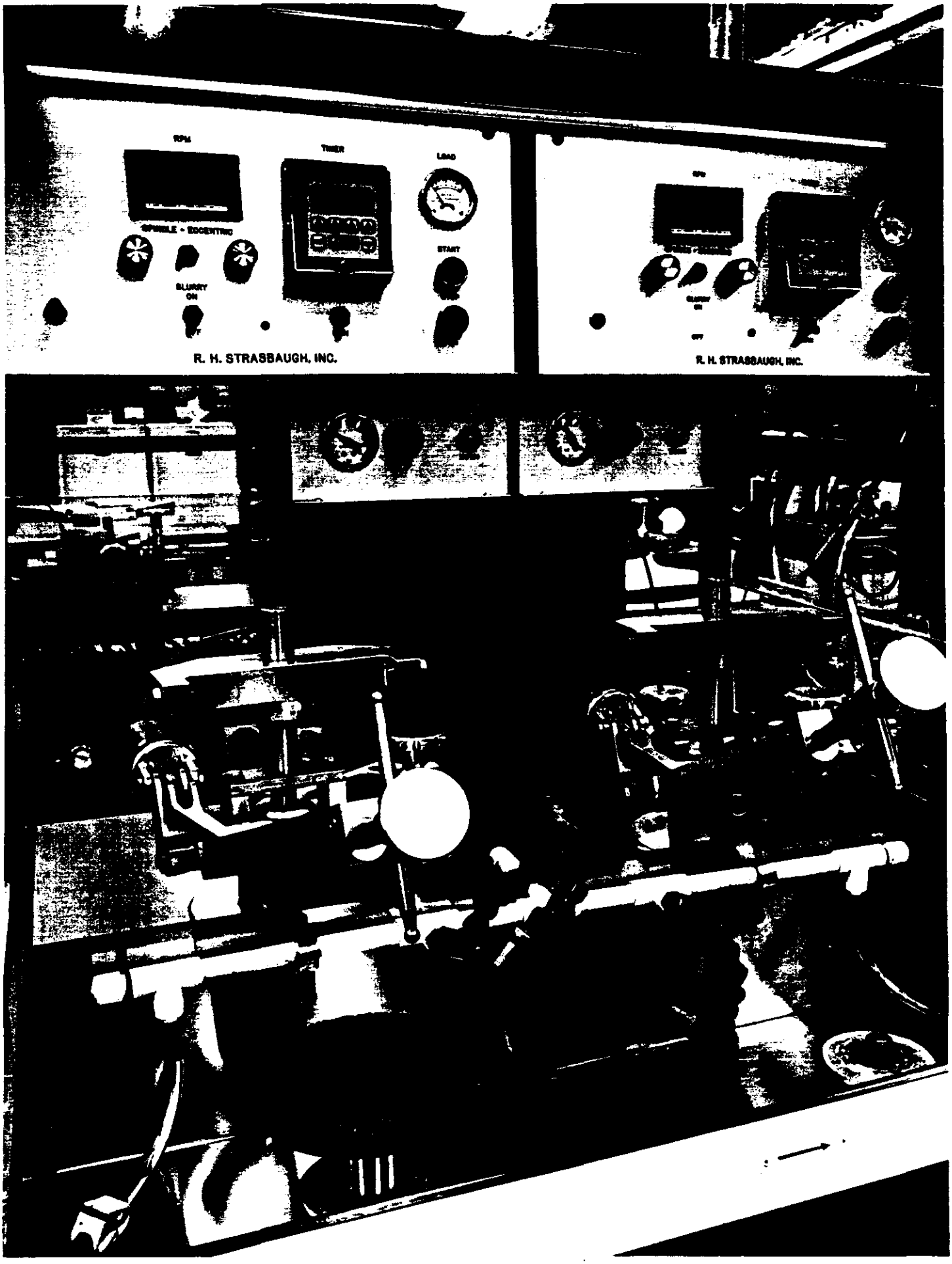
RPM
TIMER
LOAD
SPINDLE - ECCENTRIC
START
SLURRY
ON
R. H. STRASBAUGH, INC.
R. H. STRASBAUGH, INC.

Concept sketch of grinding and polishing fixture (in fabrication at LLNL). The fixture is designed to hold 5 crystals at a time. Two fixtures are being prepared one for the half crystals and one for the crystal pairs after gluing. The crystals are mounted to precision machined blocks that are adjustable to provide the proper offset of the angles of the surfaces for a co-planar surface to the polishing lap. Shims are used to align the crystals in other dimensions and to distribute loads across larger areas of the crystal surface. This fixture is mounted on a rotating turntable and a polishing lap about 2/3 of the area of the combined crystal surface is brought down from above. Flatness is maintainable to a few fringes over the entire surface using this technique. Surface finish is maintainable to a few tens of angstroms.

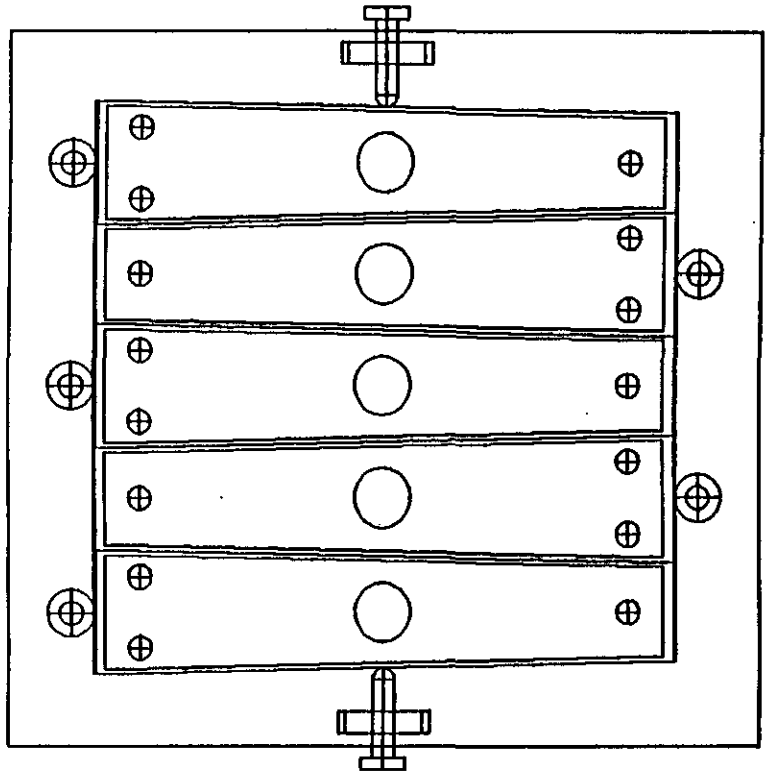

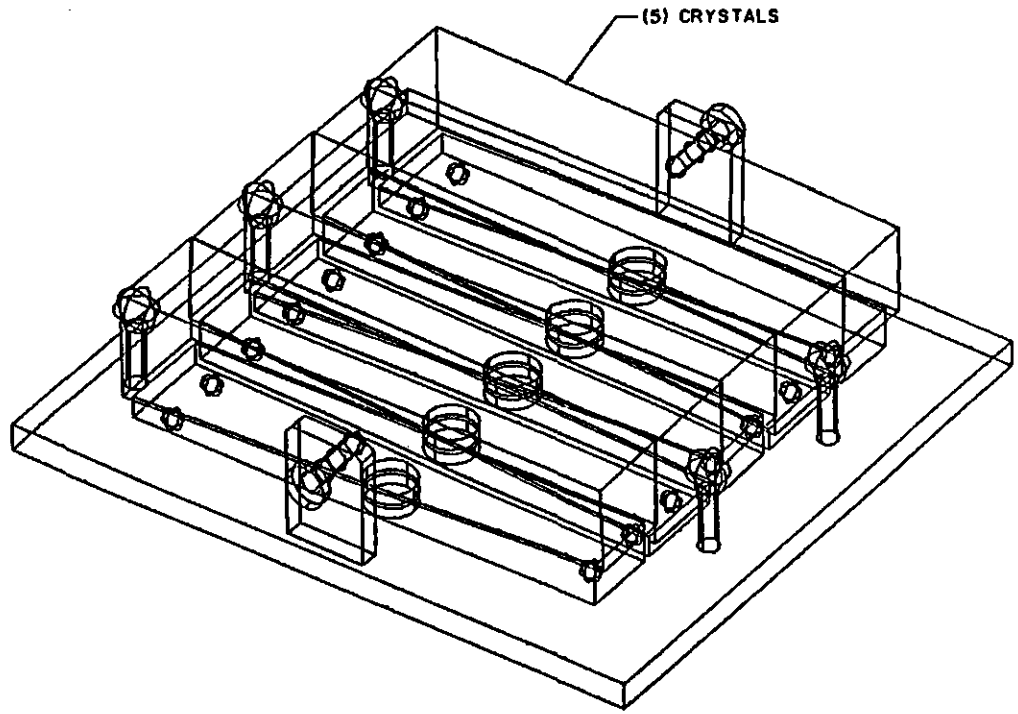
(5) CRYSTALS

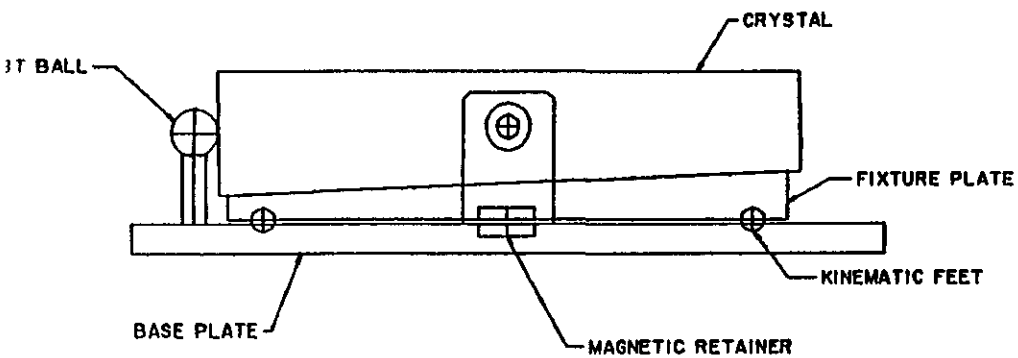
CRYSTAL
3T BALL
FIXTURE PLATE
KINEMATIC FEET
BASE PLATE
MAGNETIC RETAINER

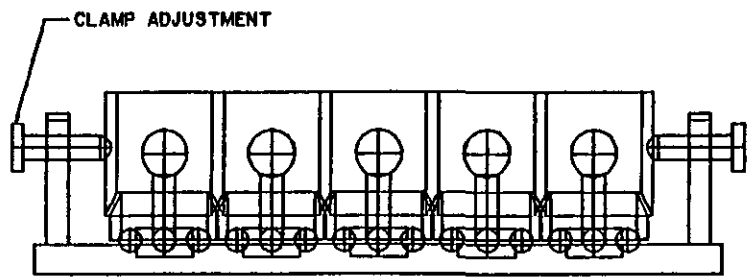
CLAMP ADJUSTMENT

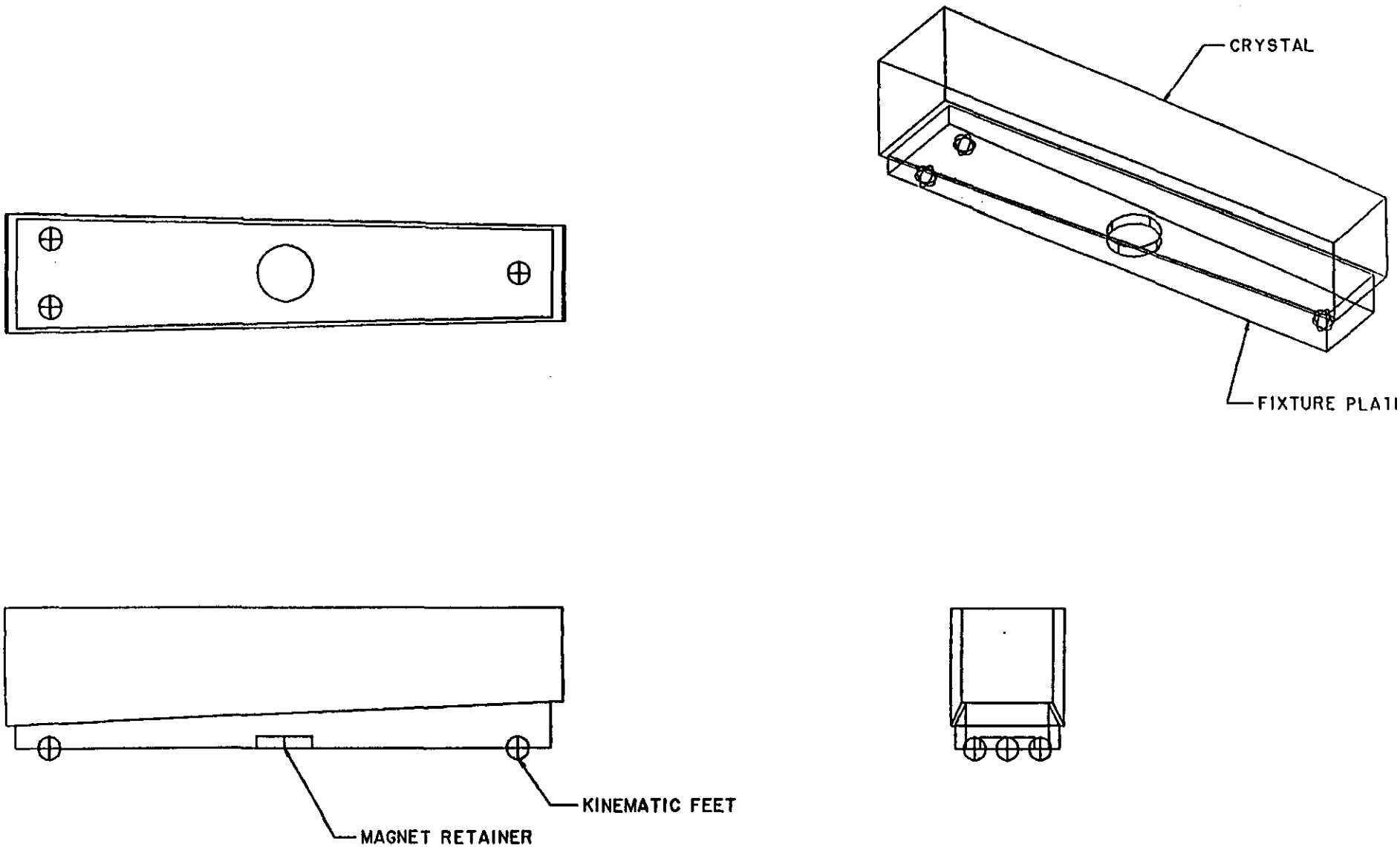
CRYSTAL
FIXTURE PLATI
KINEMATIC FEET
MAGNET RETAINER

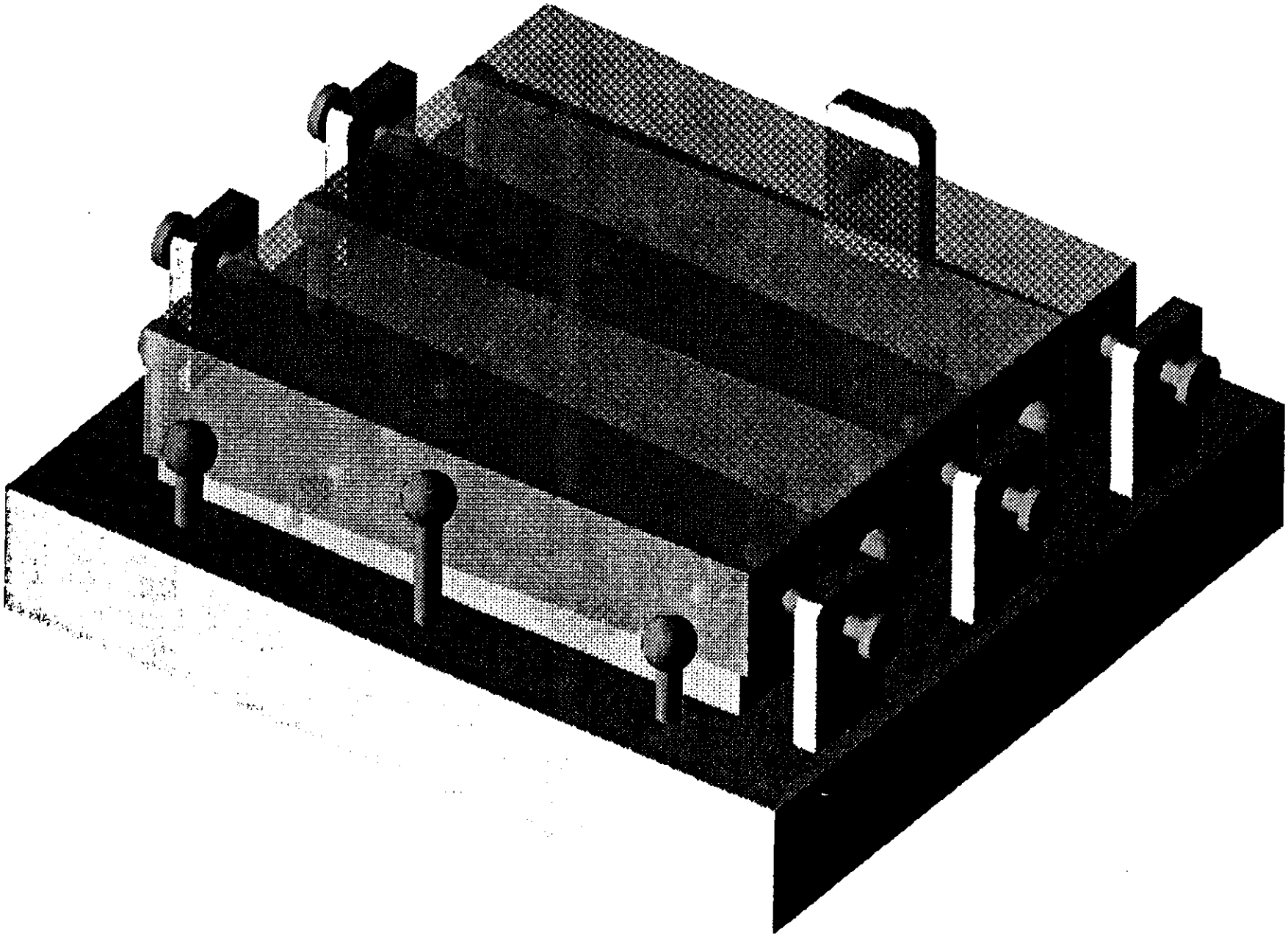

Concept sketch of grinding and polishing fixture for the crystal end faces (in fabrication at LLNL). The fixture is designed to hold 4 crystals at a time. The fixture is designed in two halves to allow the crystals to be mounted. Not shown are small pieces of BaF_2 crystal placed around the perimeter of the polishing fixture to prevent rolling off of the edges. Shims are used to align the crystals in other dimensions and to distribute loads across larger areas of the crystal surface. This fixture is mounted on a rotating turntable and a polishing lap about 2/3 of the area of the combined crystal surface is brought down from above. Flatness is maintainable to a few fringes over the entire surface using this technique. Surface finish is maintainable to a few tens of angstroms.

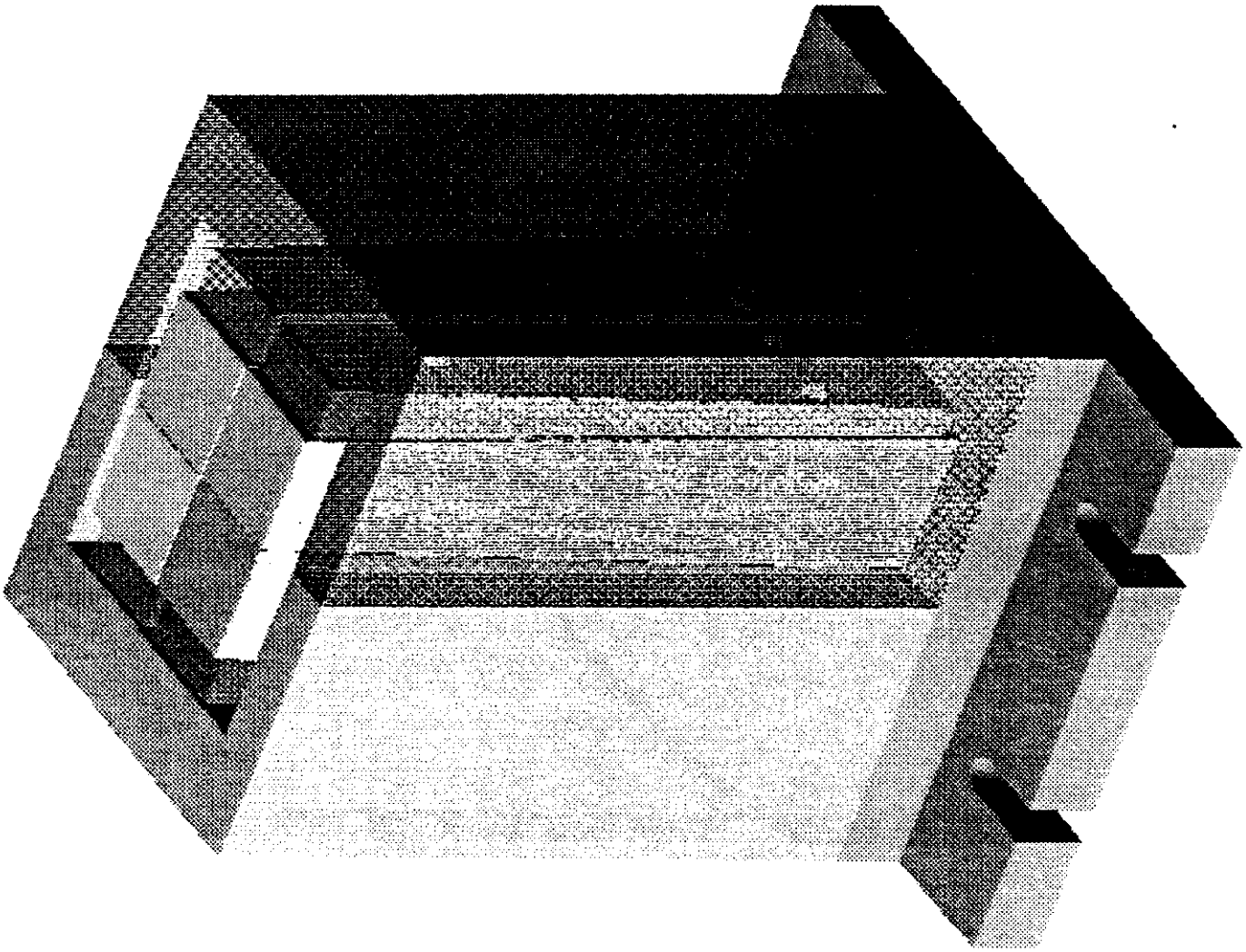

Concept sketch of gluing fixture for the crystal pair (in fabrication at LLNL). The fixture is designed to take advantage of the perpendicularity of two of the sides with respect to the interface sides. The crystals are allowed to rest on the the flat surface of the fixture and are lightly loaded to press the ends together during the curing stage of the glue. Shims are used to align the crystals in other dimensions and to distribute loads across larger areas of the crystal surface.

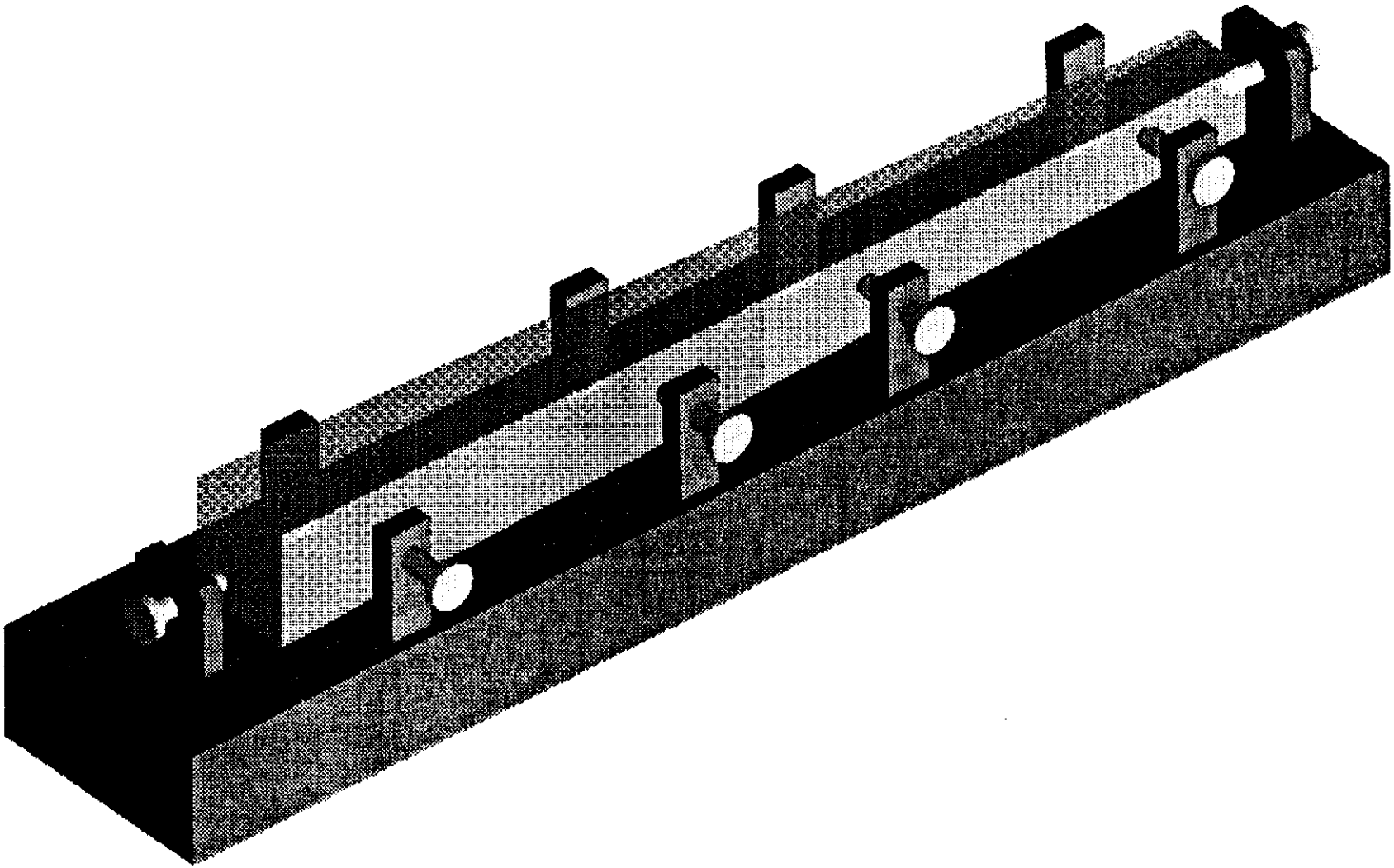

Interdepartmental letterhead
Mail Code L-490
Tel. Ext. 2-7003

May 26, 1992

To: Craig R. Wuest

From: Ben Fuchs/Fred R. Holdener

Subject: Crystal manufacturing procedures for Barium Fluoride Crystals

---

The following is a proposed procedure for manufacturing crystals for the Electromagnetic Calorimeter to be used by the Superconducting Super Collider Laboratory in Dallas, Texas.

Proposed Manufacturing Steps:

(1) - Choose best surface (i.e. flatest) as Surface Datum #1 (SD#1) for a set of four crystals.

(2) - Use standard oven procedure to hot wax SD#1 to Wedge Crystal Mount and repeat for the additional three similar crystals as shown in Figure 1.

(3) - Assemble four crystals into Closed Pack Assembly (CPA-4). This step is performed on a cleaned, stable (e.g. granite) flat surface as shown in Figure 2.

(4) - Blanchard and loose abrasive grind (see Appendix) top surfaces to establish Surface Datum #2 (SD#2) for the set of four crystals of CPA-4.

(5) - Use standard oven procedure to remove four Crystals to deblock from their wedge mounts.

Note: If the chosen best surface of Step (1) is not flat to less than 0.025 mm (0.001 inch) then steps 2 through 5 need to be repeated with SD#2 down to allow a Blachard and loose abrasive grind of SD#1.

(6) - Block set of four crystals to their 90 Degree Side Mount Guides using oven hot wax procedure with Wedge Crystal Mount laying on its side as shown in Figure 3. Shim as necessary to Wedge Crystal Mount to accept loads during grinding procedure to follow.

(7) - Assemble crystals into CPA-4-90 with side blocks for Blanchard grind/polish to establish Surface Datum #3 (See Figure 4.) Note: This will establish the three plains at 90 degrees to one another common to all crystals.

(8) - Deblock crystals and reblock with newly established Surface Datum #3 down and Side Mount Blocks removed. Assemble into CPA-4 and Blanchard and loose abrasive grind top to establish Surface Datum #4.

Note: All four Datums are now established with four 90 degree surfaces.

(9) - Use oven Procedure to Mount four similar Crystals within Crystal End Mount as shown in Figure 5. Note: Two crystals mount in each half assembly.

(10) - Blanchard and loose abrasive grind Crystal Ends and perform final polish.

(11) - Flip fixture and Blanchard and loose abrasive grind to desired height (150 mm) (i.e. establishing crystal length) and perform final polish. Use Oven procedure to remove crystals mounting blocks.

(12) - Clean crystals and assemble using glue mating fixture (See Figure 6) to maintain alignment during gluing procedure. The two glued crystals are now 500 mm in overall length (250 mm per individual crystal).

(13) - Remount long (500 mm) crystals onto Long Mating Crystal Mounts with SD#1 down using Oven Wax Procedure and reassemble into Long Crystal Closed Pack Assembly with eight crystals as shown in Figure 7.

(14) - Final Grind and Polish SD#2.

(15) - Remove crystals and remount with SD#2 down and perform final grinding and polishing procedure to complete SD#1.

(16) - Remove crystals and remount with SD#3 down and perform final grind and polish procedure to complete SD#4.
(Note: Now the three 90 degree sides are complete)

(17) - Remove crystals and remount with SD#4 down and mounted with tabbed shim stock of specified dimension along entire edge of SD#4. Edge will be left or right depending on the orientation of the crystal specification. (Tabbed and individually matched for each specific size matching to the specification table angle with SD#4 laquer protected).

(18) - Perform final Blanchard and loose abrasive grinding and polishing procedure to finish last angled surface on long crystal. (Polishing complete).

Note: Chamfering edges (0.5 mm x 45 deg.) will occur between above steps as required.

(19) - Clean, Inspect, Protect, Package & Ship.....

APPENDIX

Notes regarding specifics on grinding and polishing steps.....

1. GRINDING (Bound)

   (1a) Initial grinding will use a Blanchard bound abrasive grinding machine.

   (1b) Lubrication will consist of white mineral oil.

2. GRINDING (Loose)/POLISHING

   (2a) Loose abrasive grinding and polishing will be performed on a 31" diameter conventional polishing machine.

   (2b) 30 micron aluminum oxide loose abrasive will be used to remove surface and sub-surface damage from bound abrasive surface generator.

   (2c) 9 micron aluminum oxide loose abrasive will be used to remove surface damage from previous operation.

   (2d) Lubrication will consist of either silicon fluid or ethylene glycol.

3. POLISHING

   (3a) Polishing will use Gugolz pitch (Hardness 64 to 73)

   (3b) Fine graded 1/4 micron diamond powder will be loose abrasive for polishing

   (3d) lubrication will be either silicon fluid of ethylene glycol.

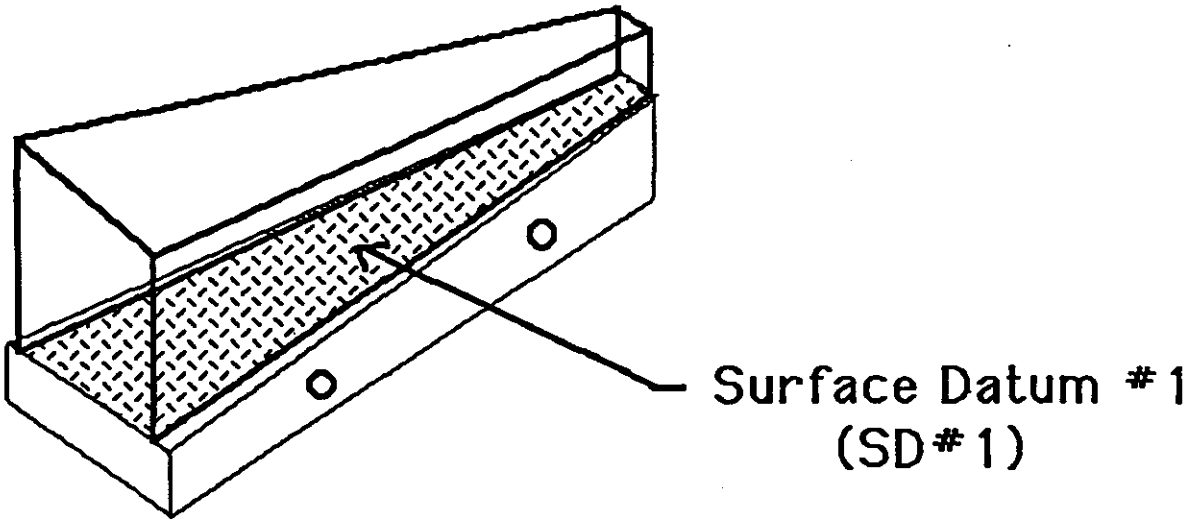

Figure 1. Wedge Crystal Mount

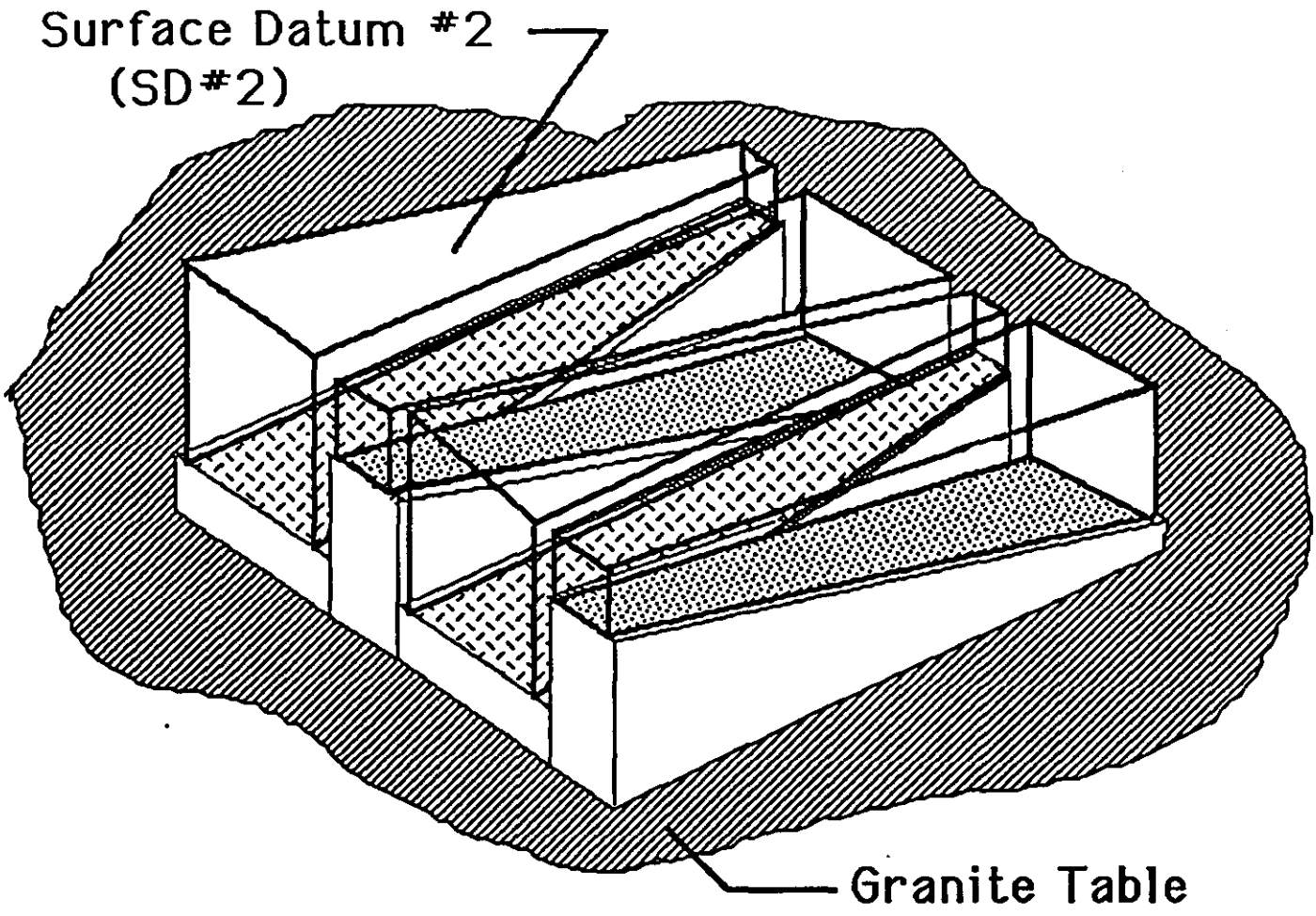

Figure 2. Closed Pack Assembly (CPA-4)

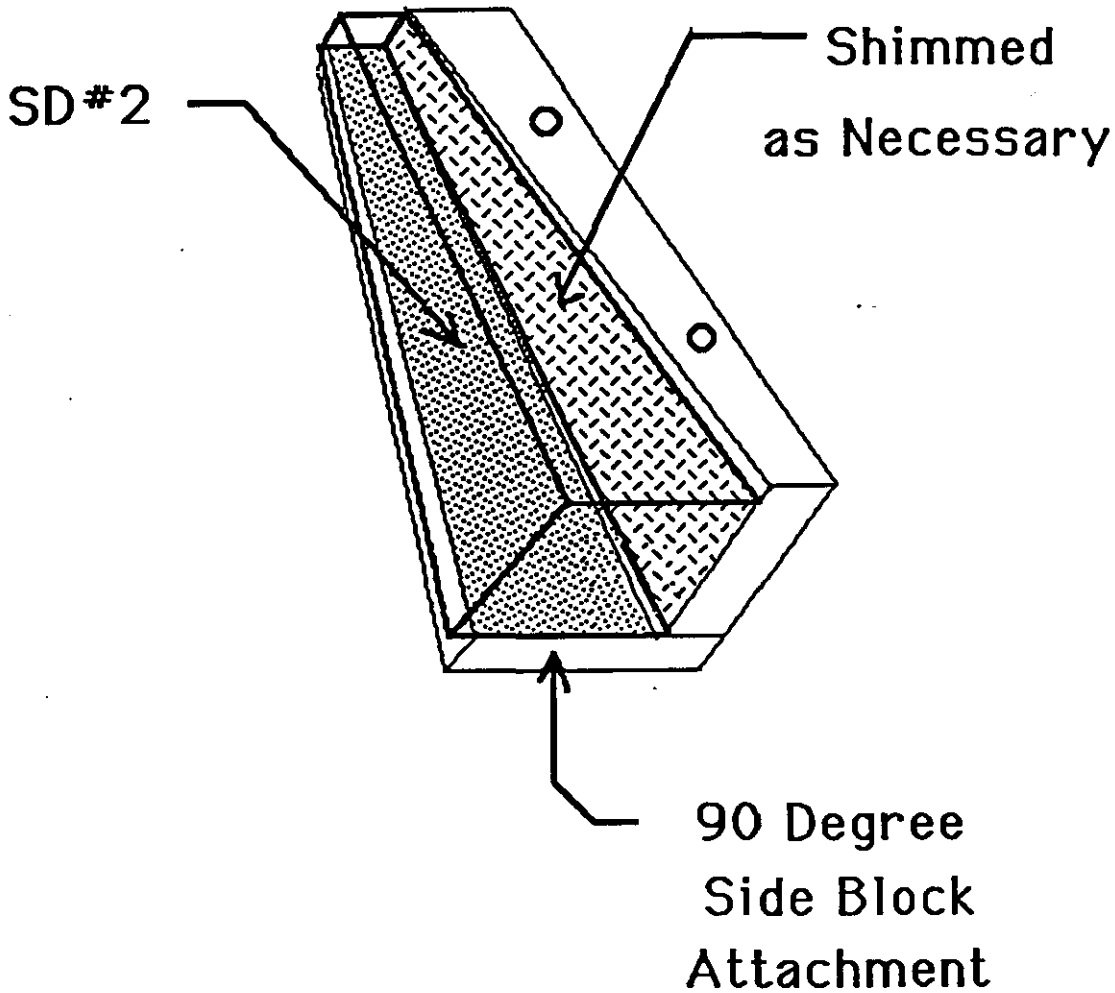

Figure 3. 90 Degree Side Mount

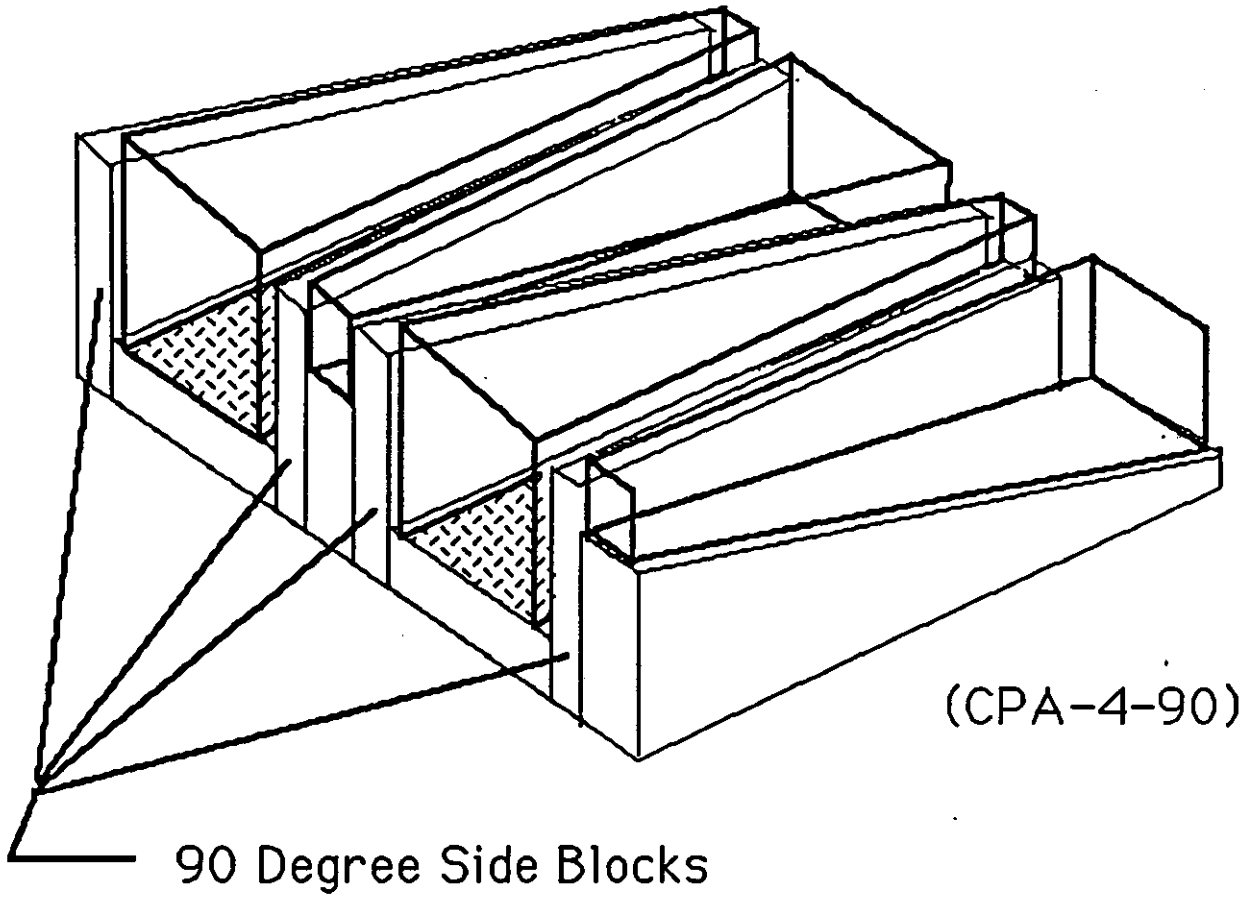

Figure 4. Closed Pack Assembly with 90 Degree Side Mount Blocks

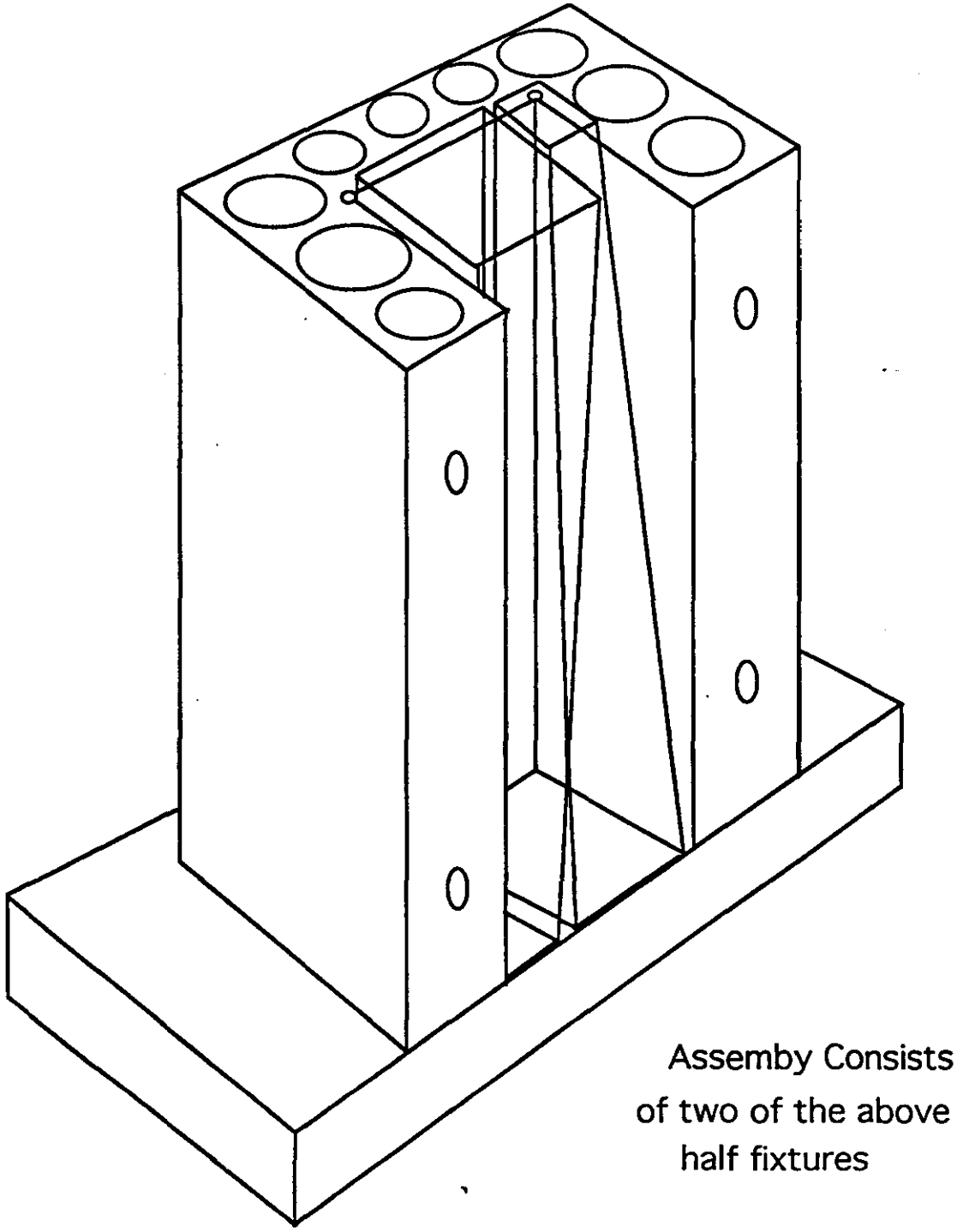

Figure 5. Crystal End Mount

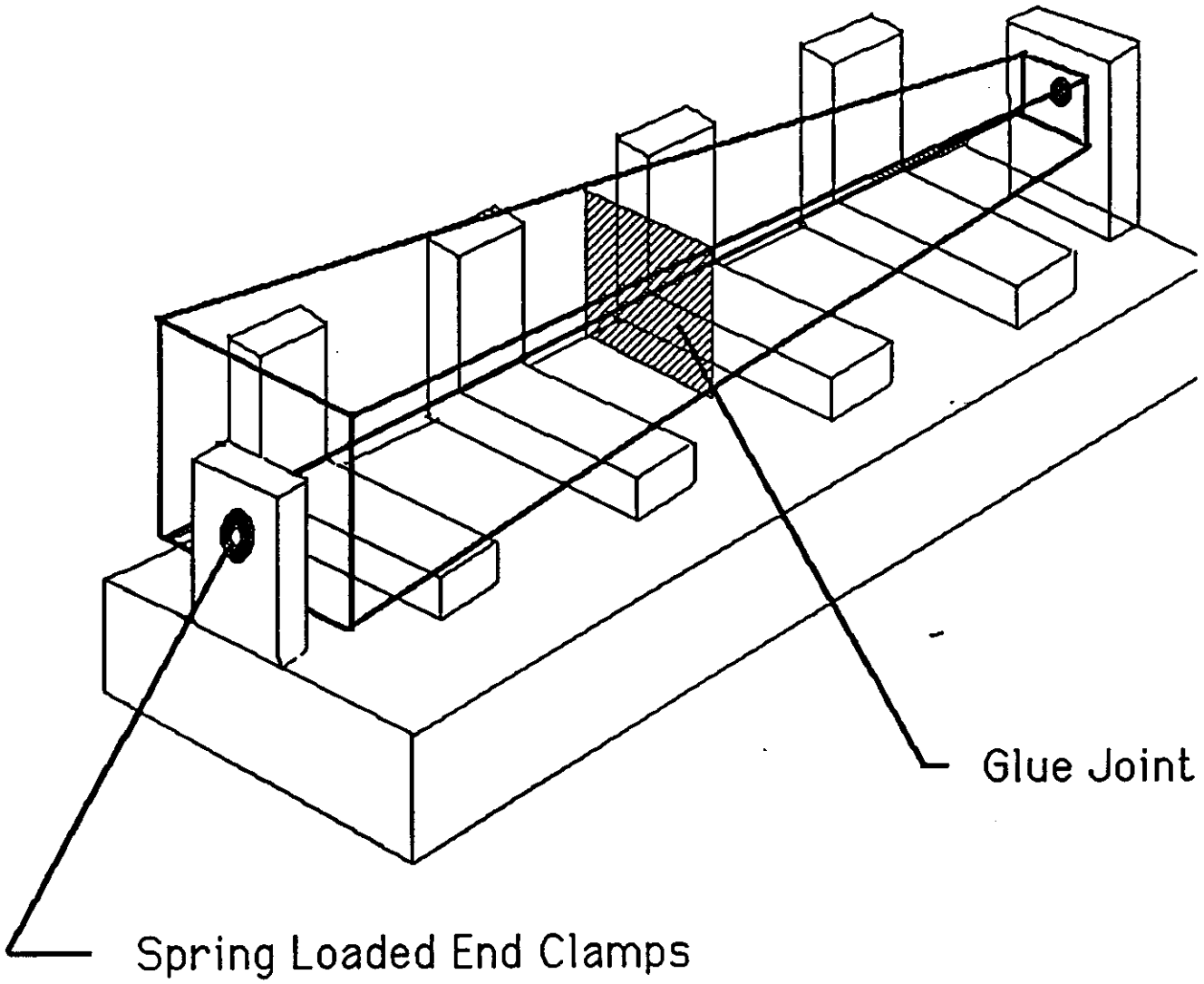

Figure 6. Crystal Gluing Fixture

Closed Pack Assembly
CPA-8

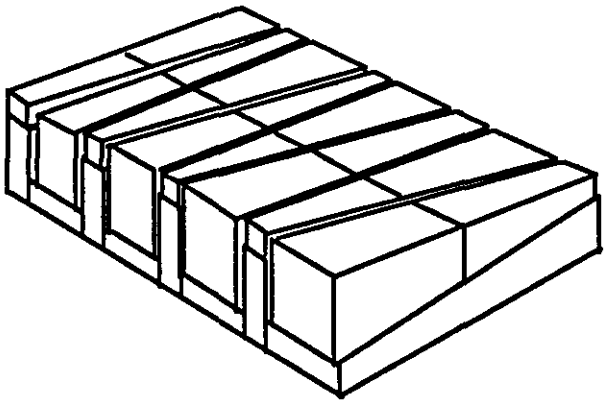

Figure 7. Long Crystal Closed Pack Assembly

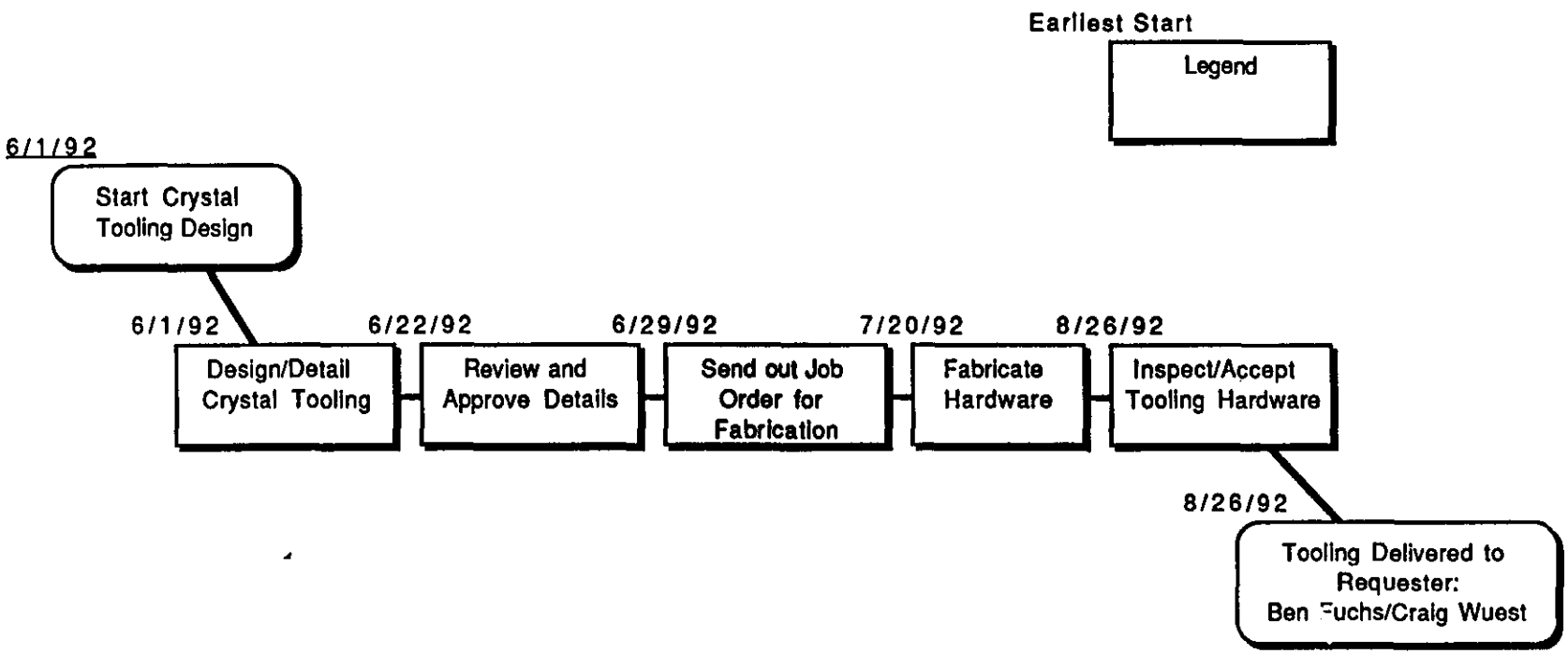
Earliest Start
Legend
6/1/92
Start Crystal Tooling Design
6/1/92
Design/Detail Crystal Tooling
6/22/92
Review and Approve Details
6/29/92
Send out Job Order for Fabrication
7/20/92
Fabricate Hardware
8/26/92
Inspect/Accept Tooling Hardware
8/26/92
Tooling Delivered to Requester:
Ben Fuchs/Craig Wuest

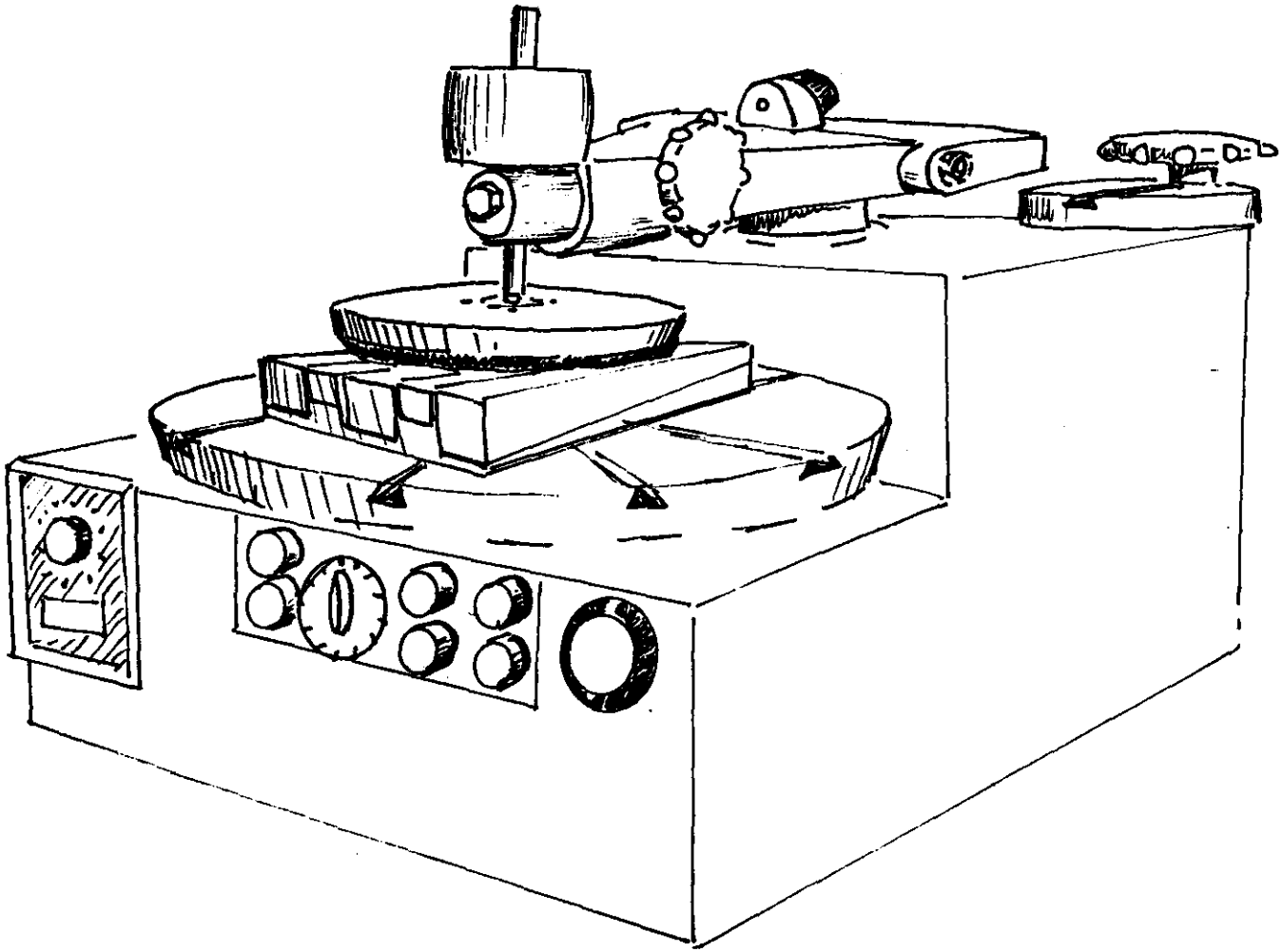

2. UV Reflective Surface Coatings R&D

High quality surface preparation is also important for insuring the proper application of a reflective coating that exhibits good reflectivity in the UV, as well as long term stability. LLNL has experimented with the application of aluminum coatings on barium fluoride, overcoated with protective layers of magnesium fluoride or silica. Measurements of front surface reflectance of 500 Å aluminum coatings on barium fluoride have been made along with measurements of reflectance through a thin (2 mm) sample of barium fluoride (back reflectance). These measurements are presented in this section. It is seen that reflectivity at 220 nm is about 90%.

Diffuse scattering measurements of the aluminum coating have also been made for front surface scattering. It is assumed that this is representative of the diffuse scattering on the back surface into the barium fluoride crystal. To verify this, AFM and Scanning Electron Microscopy (SEM) images were made of the aluminum coating on the polished barium fluoride substrate. The surface basically follows the underlying polished substrate and so we can assume that the measured diffuse scattering is similar into the barium fluoride bulk (the effect of the difference in the index of refraction between barium fluoride (1.47) and air (1.00) is not considered here). A measurement of the diffuse scattering into the barium fluoride can be accomplished using a hemisphere of material coated on the flat side, however this has been done yet. A plot of the coefficient of diffuse scattering for a 600 Å aluminum coating on barium fluoride with no overcoating is given in this section. The vertical axis plots the logarithm of the amount of light scattered. The horizontal axis plots the angle of the laser (633 nm) with respect to the surface normal. Measurements were started at 3 degrees to avoid saturating the photomultiplier tube. For angles greater than about 30 degrees, the amount of light scattered diffusively is about 0.01%.

Additional work is planned to study the long term integrity of coatings. For example, if microscopic pits or pin-holes occur, moisture can come into contact with the crystal surface, eventually leading to a degradation of the coating in that region due to chemical reactions that may occur. To check this aging tests are envisioned and are summarized in an accompanying viewgraph.

LLNL is also helping to provide this data to physicists at Oak Ridge National Laboratory to help model the response of a barium fluoride crystal using a specially written Monte Carlo program. In addition studies of the response of 50 cm long crystals to cobalt-60 and iron-55 gamma rays and x-rays are being carried out at LLNL. These studies are being made for different coating materials and combinations of coatings in an effort to provide uniform collection of scintillation light along the length of the crystal.

Finally, we have requested that LLNL coatings engineers provide the Barium Fluoride Collaboration with an estimate of the work required for full scale coating of the approximately 15,000 crystal pairs for the EM calorimeter. A document is attached that describes the estimated level of effort. An additional estimate is being provided by Optical Coatings Laboratories, Inc. (OCLI) in Santa Rosa, CA. OCLI maintains two large 4 m evaporative coating systems and has experience in coating large optics. This estimate is in progress. The Beijing Glass Research Institute (BGRI) has an older 4 m diameter evaporative coater that could be utilized for production coating of crystals. In addition, Zhongnan Optical Instrument Factory has three 1 m coaters. We have request coated small samples of barium fluoride from both BGRI and Zhongnan for analysis. In addition, we are coordinating the engineers at the various Institutions in an effort to design a crystal feeding mechanism for mass production of coatings at BGRI.

BaF2 UV Reflective Coatings

- Aluminum/MgF2 coatings applied and analyzed at LLNL - 90% @ 220 nm.
  - Front surface scatterometry and reflectometry measurements on new samples in progress.
  - Data supplied to K. Read at ORNL for Monte Carlo.
- New cost estimate made for coating 15,000 crystals by outside vendor: $1M - $1.5M
- Job out for bid to coat single 50 cm BaF2 crystal.
- Discussions will be held with BGRI to transfer coatings technology (coating composition, masks for graded coatings) to their large evaporative coating system.
- Discussions with coatings experts at LLNLto evaluate long term integrity of coatings - accelerated aging tests, etc.
- Summer student at LLNL to evaluate 50 cm BaF2 for linearity with various coatings using HTV R-431S PMT (CsTe photocathode) and Co-60, SR-90 sources. Data to be supplied to ORNL for Monte Carlo benchmarking.

BaF2 UV Reflective Coatings - long term aging

EFFORTS TO MINIMIZE AGING OF COATINGS
[AGING = CHANGE IN SPECTRAL PERFORMANCE AND /OR DETERIORATION WITH TIME]

PROBLEMS

1. Spectral shift due to humidity changes
   - due to water absorption in coating; control by choice of materials and technique.

2. Reduction of BaF_2 and/or coating with exposure to UV (darkening/black spots)
   - related to stoichiometry of coating materials and contaminants present; need to minimize fabrication residues, qualify BaF_2 surface cleaning, and examine choice of coating materials.

3.) Spot delamination of coating
   - pinholes in coating/initiation sites of delamination *related to imperfections on BaF_2 surface*; controlled fabrication of substrate surface critical.

STUDIES

- BaF_2 surface fabrication / defect reduction
- BaF_2 cleaning technique; analyze surfaces for residues
- Humidity chamber tests of prototype coatings on BaF_2
- UV exposure tests of prototype coatings on BaF_2

BaF2 UV Reflective Coatings

Milestones:

July 1:
1. Aluminum coatings deposited on BaF2 samples < 20 cm long.
2. Measurements made on front-surface and back-surface reflectance versus wavelength.
3. Data supplied to ORNL for Monte Carlo.
4. Long term aging of coatings under study.
5. Outside vendors identified for coating 15,000 crystals, costing done.
6. Measurements begin on light collection versus length for "old" Chinese 50 cm crystal. No coating.

July 7:
1. New coatings prepared for scatterometry and reflectance measurements
2. Aging tests begin.
3. Measurements continue on 50 cm crystal light collection versus length for different wrappings/coatings. Data to be supplied to ORNL for LTRANS benchmarking.

Aug. 1:
1. Aging test results becoming available.
2. Scatterometry results available for Monte Carlo.
3. Incorporation of FILMSTAR into LTRANS for reflectance curves.
4. 50 cm long crystal coated by outside vendor and measured, data supplied to ORNL for LTRANS benchmarking.

Aug. 9:
1. Begin process to coat small samples with non-uniform reflective coatings.

Sept 2:
1. Coat 50 cm long crystal with non-uniform reflective coating using data from experiment and calculations to define functional form for reflectance vs. length.

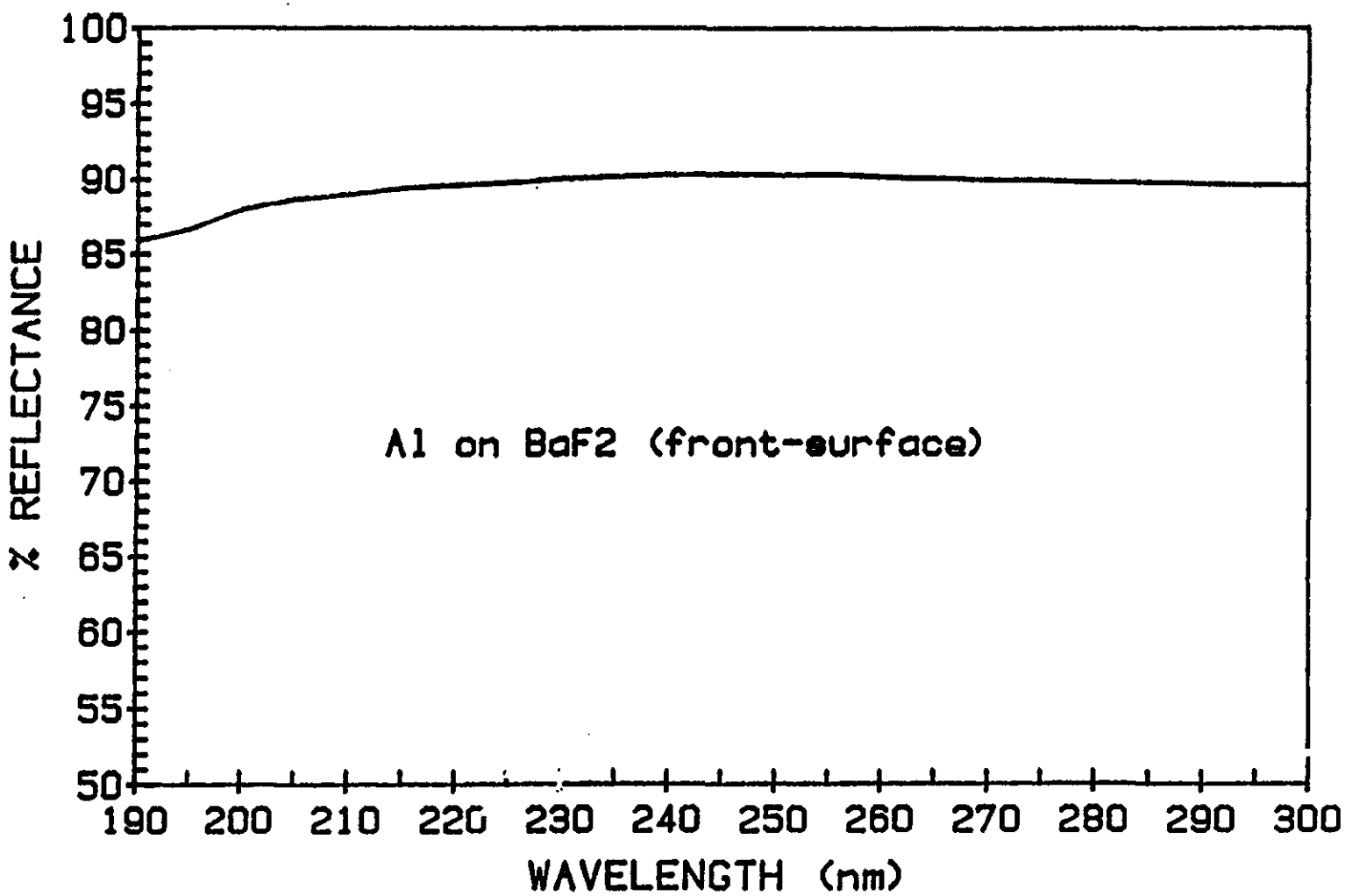
100
95
90
85
80
75
70
65
60
55
50
% REFLECTANCE
Al on BaF2 (front-surface)
190
200
210
220
230
240
250
260
270
280
290
300
WAVELENGTH (nm)

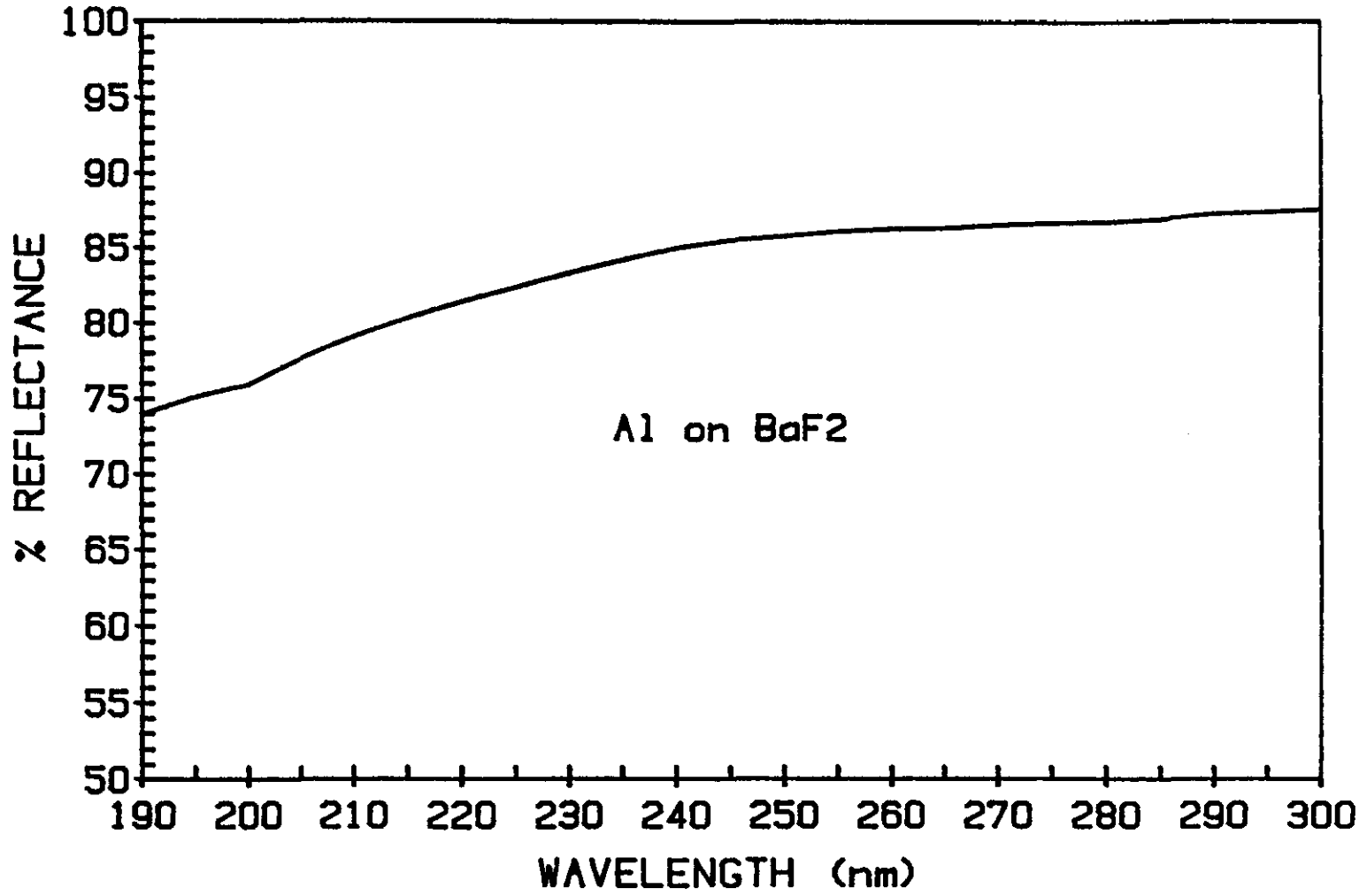
100
95
90
85
80
75
70
65
60
55
50
% REFLECTANCE
Al on BaF2
190
200
210
220
230
240
250
260
270
280
290
300
WAVELENGTH (nm)

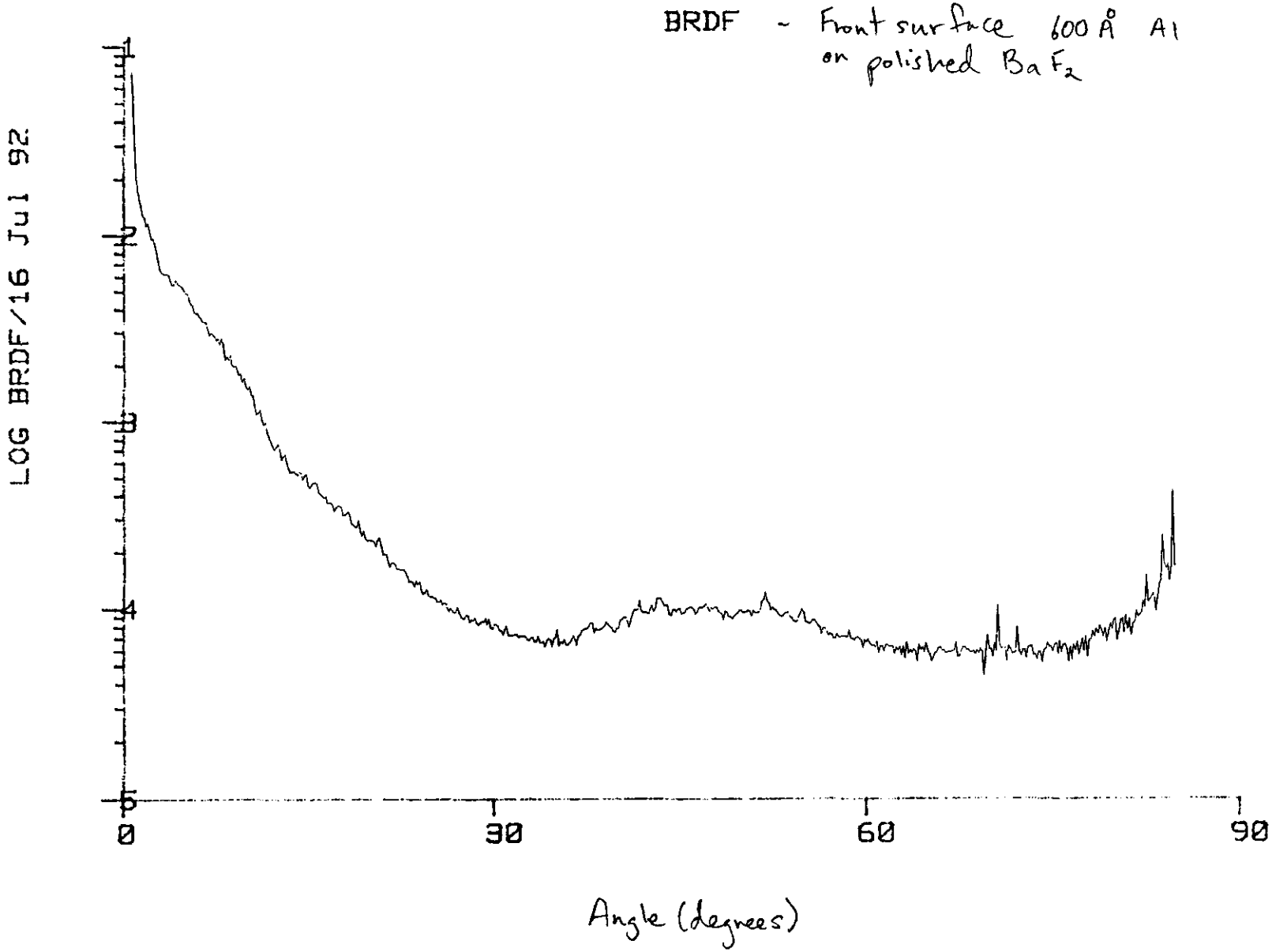
BRDF - Front surface 600 Å Al
on polished BaF2
LOG BRDF/16 Jul 92
1
2
3
4
5
0
30
60
90
Angle (degrees)

BaF1

The next series of figures examines the quality of a 600 Å aluminum coating applied by electron beam evaporation to a 14 Å RMS polished barium fluoride sample. This is the same ample that was examined using Atomic Force Microscopy (AFM), images of which were presented in Section 1. The first figure shows scanning electron microscope (SEM) photographs of the surface at 1000x and 5000x magnification. Features observed include the surface polishing marks beneath the aluminum coating as well as some small particles, possibly dust or larger pieces of aluminum. The next series of figures show AFM images of the same sample on a different area of the sample. The first image shows 40 μm x 40 μm are with similar features to those seen in the SEM photographs. Three dimension analysis reveals that the particles on the surface of the aluminum are about 75 nm or less in height. Higher magnification of a 2 μm x 2 μm area shows the surface roughness in greater detail. A scan through a region not encompassing any of the particulates gives a surface finish of 21 Å RMS, or slightly rougher than the uncoated barium fluoride substrate.

BaF2/Aluminum Coating Analysis

600 Å aluminum coating applied to BaF2 substrate polished to 14 Å RMS surface finish

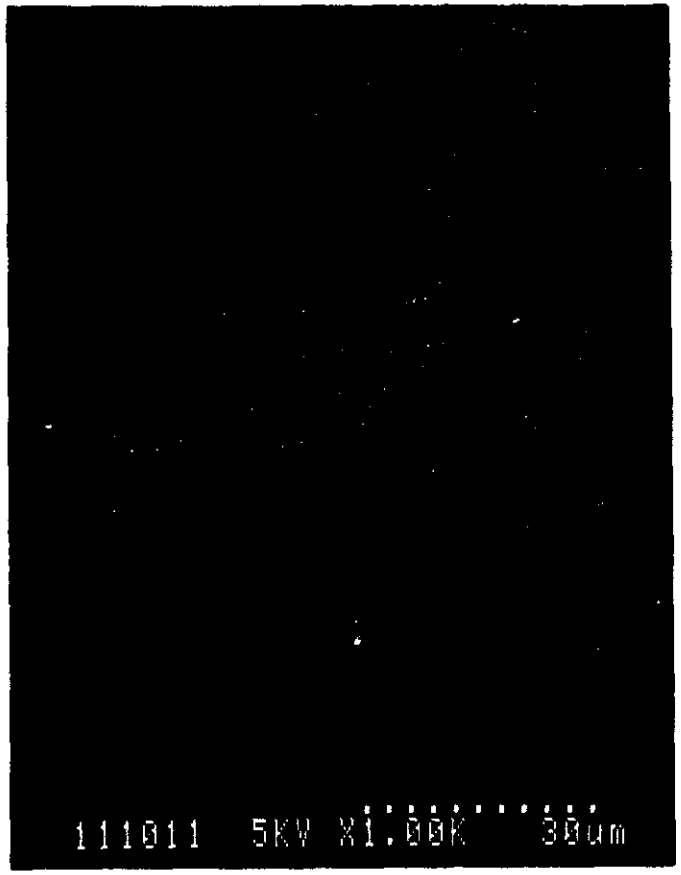

Scanning Electron Microscope Photograph - x1000

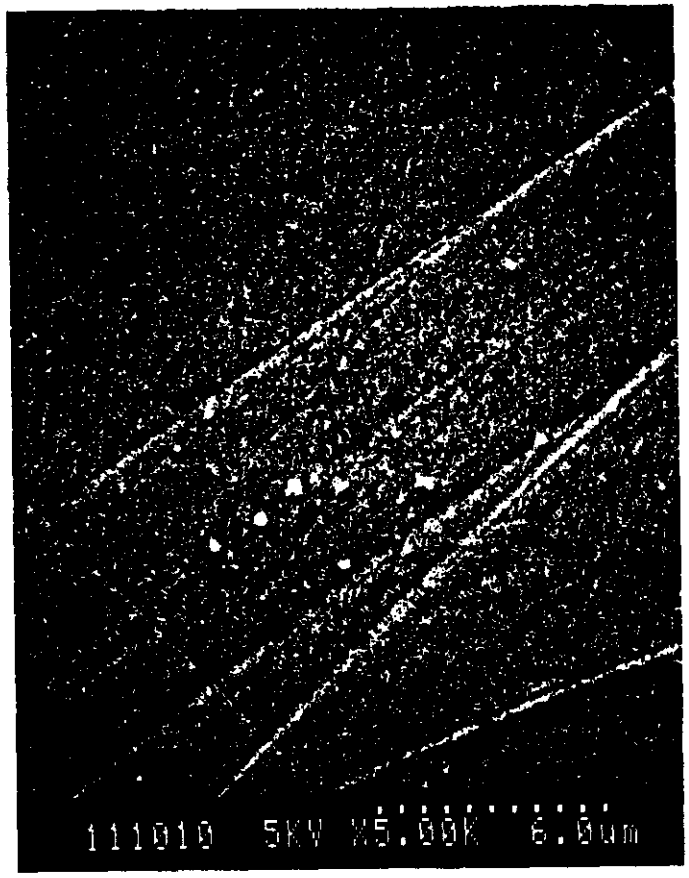

Scanning Electron Microscope Photograph - x5000

Threshold Surface Area Execute Clear

Roughness Analysis

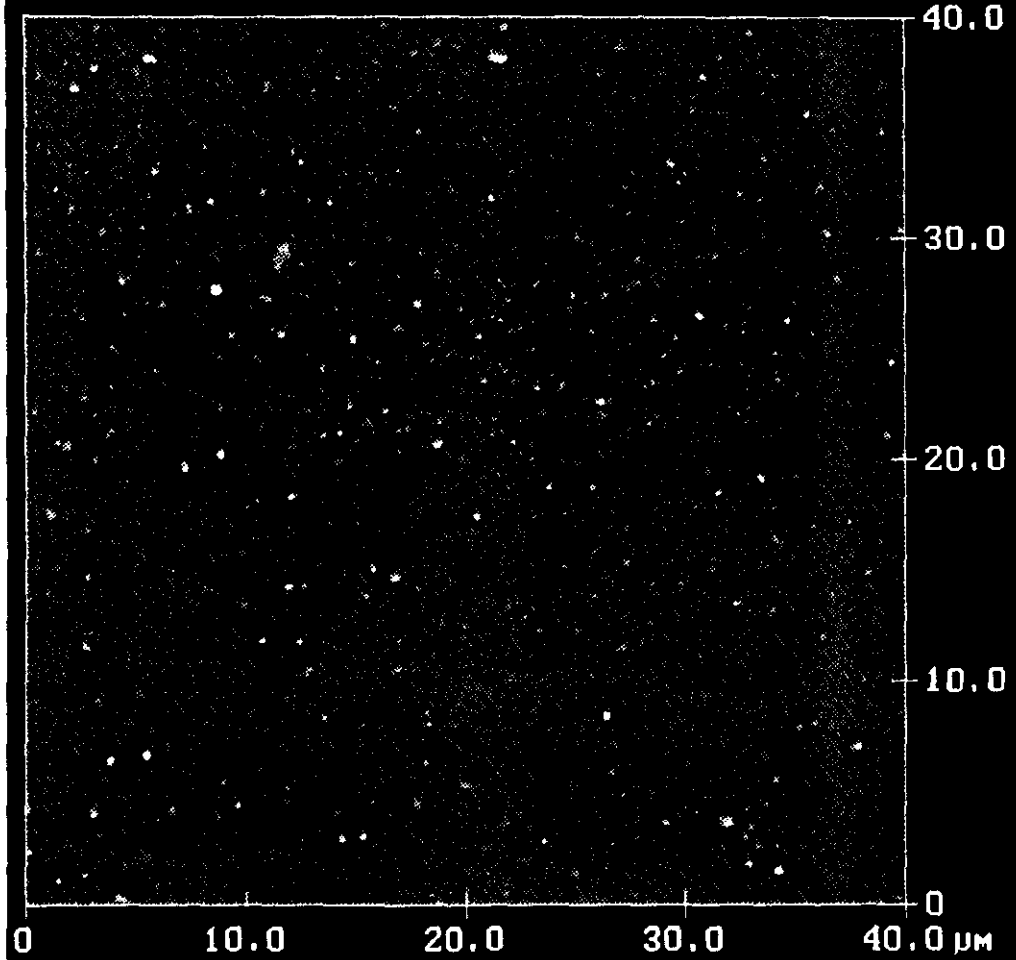

Image Statistics

Z range (Rp)	251.05 nm
Mean	0.001 nm
Rms (Rq)	3.987 nm
Mean roughness (Ra)	2.003 nm
Max height (Rmax)	251.11 nm
Surface area	
Surface area diff	

Box Statistics

Z range (Rp)	
Mean	
Rms (Rq)	
Mean roughness (Ra)	
Max height (Rmax)	
Threshold (% rms)	
Threshold	
10 pt mean (Rz)	
Peak count	
Av peak height	
Surface area	
Surface area diff	
Box x dimension	
Box y dimension	

Thresh cal off Area off

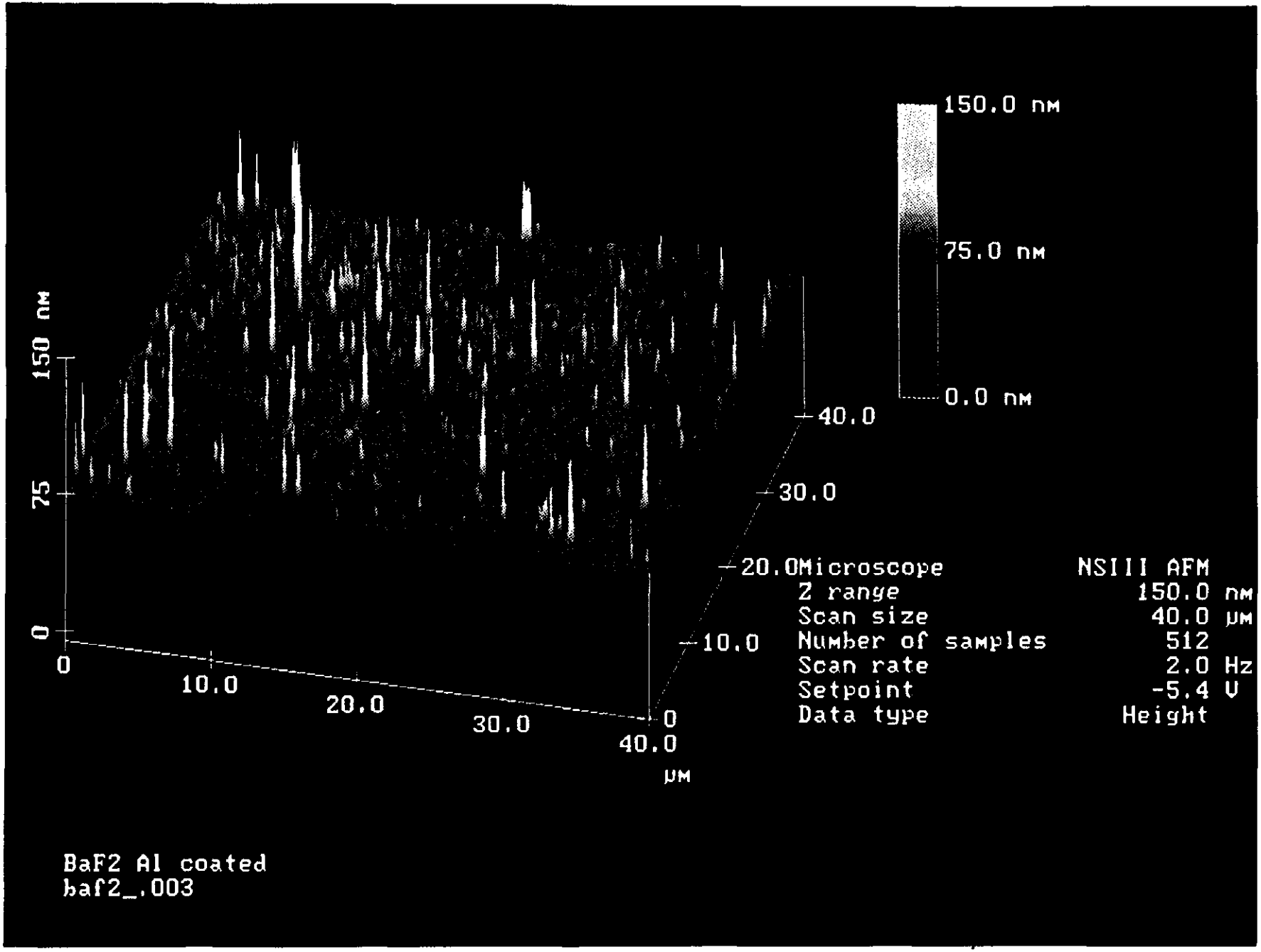
150.0 nm
75.0 nm
0.0 nm
150 nm
75
0
0
10.0
20.0
30.0
40.0
µm
0
10.0
20.0
30.0
40.0
Microscope NSIII AFM
Z range 150.0 nm
Scan size 40.0 µm
Number of samples 512
Scan rate 2.0 Hz
Setpoint -5.4 V
Data type Height
BaF2 Al coated
baf2_.003

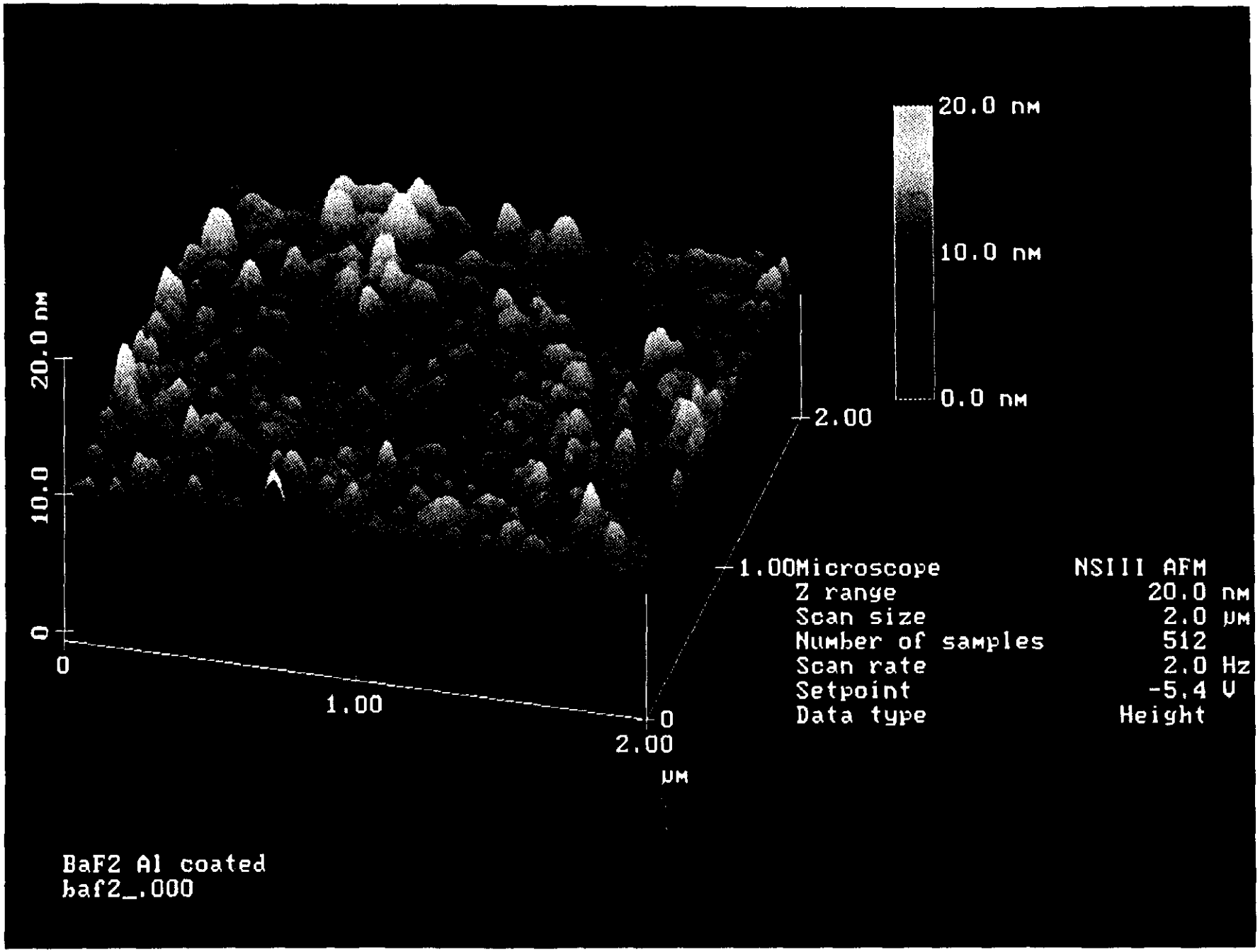
20.0 nm
10.0 nm
0.0 nm
20.0 nm
10.0
0
0
1.00
2.00
0
2.00
µm
1.00
Microscope NSIII AFM
Z range 20.0 nm
Scan size 2.0 µm
Number of samples 512
Scan rate 2.0 Hz
Setpoint -5.4 V
Data type Height
BaF2 Al coated
baf2_.000

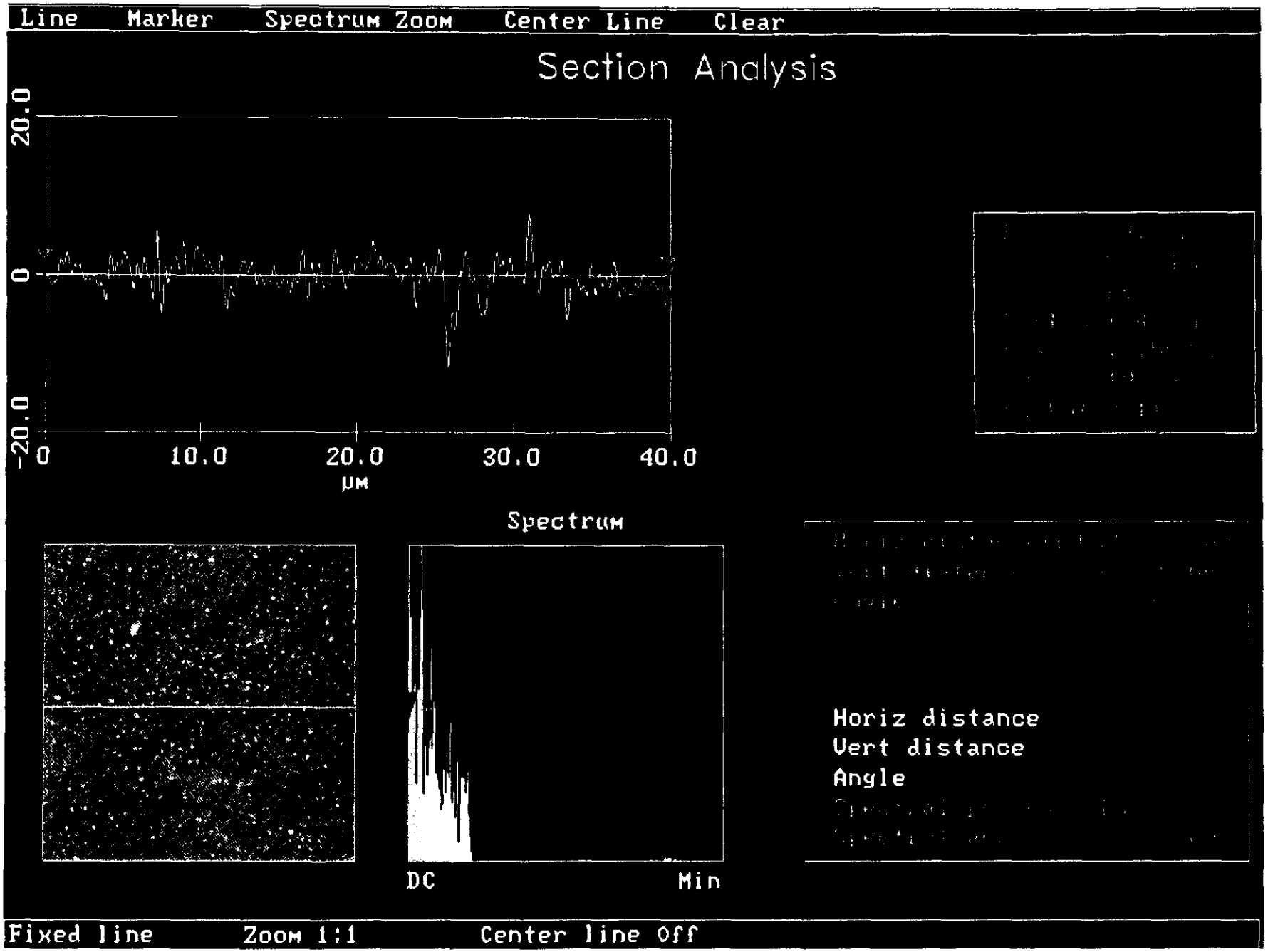
Line
Marker
Spectrum Zoom
Center Line
Clear
Section Analysis
20.0
0
-20.0
0
10.0
20.0
30.0
40.0
µm
Spectrum
DC
Min
Horiz distance
Vert distance
Angle
Fixed line
Zoom 1:1
Center line Off

Lawrence Livermore National Laboratory

To: Craig Wuest
From: Bob Chow and Gary Loomis x2-7615 & x4-6227
Subject: Production barium fluoride coating costs
Date: 5/22/92

ABSTRACT

Table 1 summarizes the time duration and costs for this project. Starting with a new coating system, the estimate project costs are $0.93M to $1.48M and will take ≈ 2.25 to 3.25 years to complete depending on the options. The options are 1 or 2 vacuum coatings systems, the $0.93M or $1.48M, respectively; and the number of 8 hour shifts (1, 2, or 3 shifts). Naturally, if you select a vendor with the appropriate vacuum system(s) and personnel the project duration can be shortened up to 50%.

Table 1: Project duration for Barium Fluoride Internal Reflectors

Time Scale:	Year 1	Year 2	Year 3
Vacuum Coating System			
Procure Coating Vacuum System	|<--->|		
Fab, Design, Assemble, Test system	|<----->|		
Locate & obtain facilities	|<------>|		
Facilitize Coating system		|<->|	
Procure & facilitize spectrophotometer	|<-------->|		
Training & Process Optimization		|<->|	
Coat Crystals			
1 system ($0.93M)			
1 shift			|<---------->|
2 shifts			|<------>|
3 shifts			|<--->|
2 systems ($1.48M)			
1 shift			|<------>|
2 shifts			|<-->|
3 shifts			|<->|

BACKGROUND

You requested a cost estimate required to coat four sides of 15,000 BaF_2 crystals with an internal UV (180 nm ?) reflector. The crystal dimensions were 3 cm x 3 cm x 50 cm and reflectors were to be coated onto the 3 x 50 cm sides. We recommend e-beam evaporated Al as the reflector layer and the protective overcoat to be either a thermally evaporated layer of SiO_2, Cu or Ti. The cost of obtaining a vacuum coating system for this project was also included.

VACUUM COATING SYSTEM

The dimensions of the vacuum chamber was calculated on efficient packing of the crystals onto spindles rotating azimuthally on a platen which is also rotating. This enhances the coating thickness control over the platen diameter. Figure 1 is a sketch of our thought process coming up with a 9' x9' x 9' box chamber. A 30" Ø spindle can hold 16 crystals in almost a square area to be coated. The spindles are packed hexagonally onto a platen, giving 96 sides which can be coated per cycle.

COATING PROJECT DURATION

The estimated time for the coating cycle is 3 hrs, which includes the time to mount the spindles (1 hr), pumpdown the vacuum chamber (1.5 hrs), deposit the layers and vent the chamber. The estimated time for the crystal cleaning cycle is 4 hrs, which includes the time to actually clean and mount the crystals onto the spindles. The longer of the these two cycle times was used in calculating the duration of the coating phase since these cycles can be performed in parallel.

A vacuum system downtime of 20% was assumed. The downtime is required to perform tasks such as re-foiling the interior of the chamber to keep it clean of particulates, the preventive maintenance of the vacuum pumps to keep constant pumpdown times under control (especially since pumpdown is a major portion of the coating cycle).and e-gun source maintenance.

Now we have:

1. 60,000 sides to be coated
2. 96 sides can be coated per run
3. Each coating cycle takes 4 hrs
4. 20% downtime

which gives the production coating duration times in the fourth column of Table 2 below according to the number of 8-hour shifts selected in column 3.

Table 2

Chamber size (feet)	# of Vacuum systems	# of 8 hr Shifts	Coating duration (yrs)	Capital ($K)	Exp's ($K)	Labor ($K)	Total ($K)	$/Xtal
9x9x9	1	1	1.5	560	100	270	930	62
9x9x9	1	2	0.75	560	100	270	930	62
9x9x9	1	3	0.5	560	100	270	930	62
9x9x9	2	1	0.75	1060	150	270	1480	97
9x9x9	2	2	0.375	1060	150	270	1480	97
9x9x9	2	3	0.25	1060	150	270	1480	97

Other time considerations is the periods required to procure a vacuum coating system (6 months), a company to design and assemble the system (6 months), locate a facility to house the system (may take place in parallel with other project tasks), facilitize the vacuum system (2 weeks) and the training/process optimization for the coating (6 weeks per shift).

COSTS

The capital costs are estimated to be $500K for each coating system and $60K for an optical spectrophotometer. A spectrophotometer is recommended for inspection and quality control of the coatings.

The expense costs are estimated to be ≈ $100K to $150K. There is about $50K for the facilitization of each vacuum system. And there is ≈ $50K for items such as source materials, cleaning solvents and wipes, argon for venting, maintenance items and miscellaneous furniture. We have *not* included the costs of polished BaF_2 crystals.

The labor costs are estimated to be $270K from the LLNL labor rate of $180K/FTE. This labor rate was found to be rather close to the labor rates of large (>600 employees) coating houses in the US. We assumed that each shift requires a 2 person crew; an FTE to clean the crystals and an FTE to coat the crystals, and that each vacuum chamber requires its own crew.

Total costs of $0.93 M to $1.48 M were estimated depending on whether you chose to have 1 or 2 vacuum systems, respectively. The results are summarized above in remaining columns of Table 3 and shown with time durations in Table 1.

IN CLOSING

If you were to consider the next size larger vacuum chamber (a cube with 18' sides), you would probably have one of if not the largest man-made high-vacuum systems on earth for optical coatings. Please call with any questions or if further details are needed.

cc: Jack Dini
Ted Saito
Dave Sanders
Tom Schwab

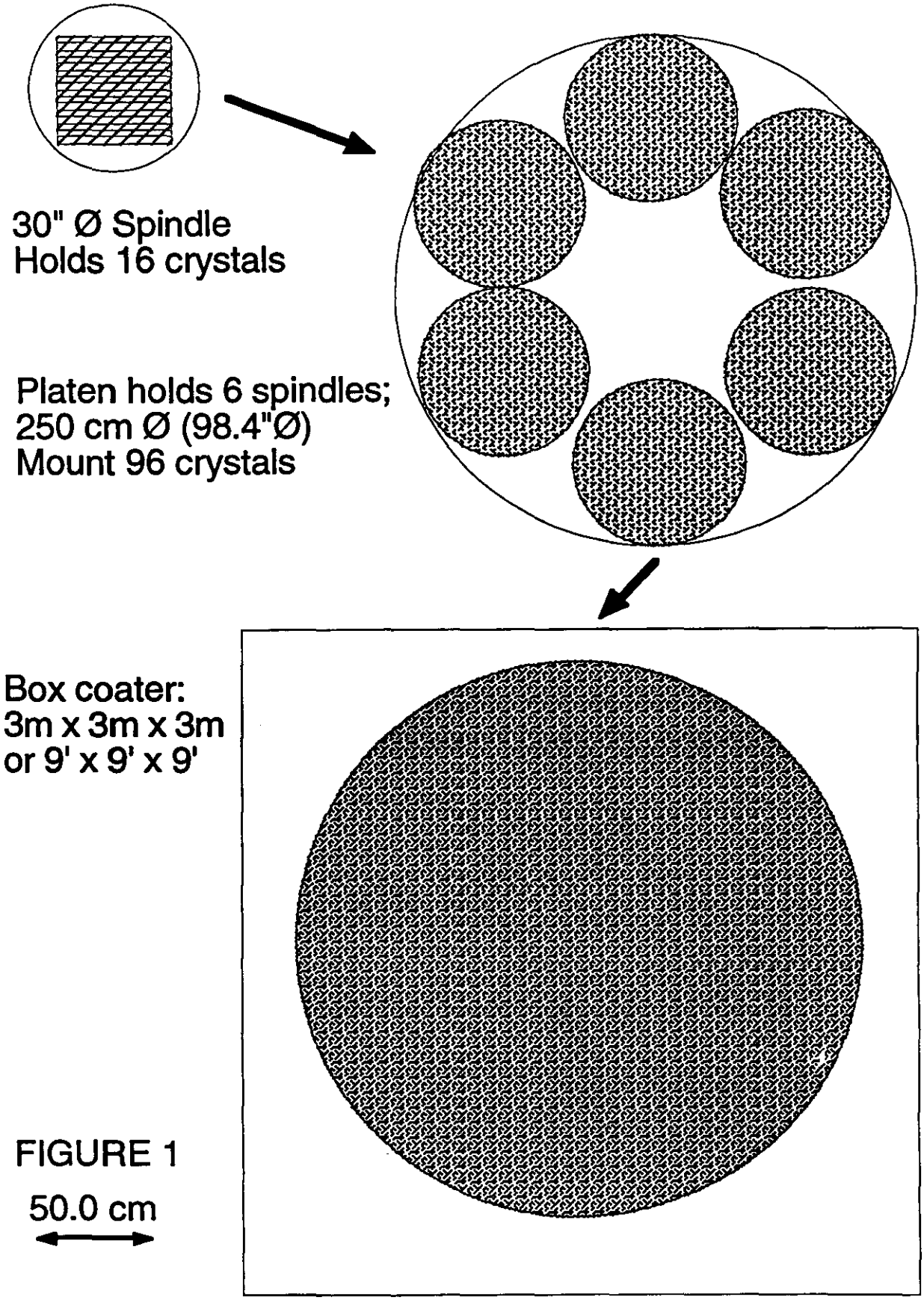
30" Ø Spindle
Holds 16 crystals
Platen holds 6 spindles;
250 cm Ø (98.4"Ø)
Mount 96 crystals
Box coater:
3m x 3m x 3m
or 9' x 9' x 9'
50.0 cm

FIGURE 1

3. Crystal Growing at LLNL

LLNL maintains a number of crystal growing furnaces and has experience in growing different fluoride crystals. The furnaces include two small and one large Czochralski (CZ) furnaces and three zone-refiners. We have initiated a program to attempt to grow the best possible barium fluoride in small cm sized quantities for radiation hardness analysis. The program is a multi-faceted approach using different source materials, including source material from the Shanghai Institute of Ceramics (SIC). The method used at LLNL differs from the method used at SIC and BGRI in that the source material is pre-processed in a Reactive Atmosphere Process (RAP), typically hydrogen fluoride, at high temperature to remove water, hydrogen, oxygen, hydoxyls, as well as metallic contaminants. This RAP'd material is used as the starting point for zone refining or CZ processing in an inert gas atmosphere. The process developed at SIC and BGRI uses sintered material in graphite crucibles cut to the approximate size of the crystals. The sintered material is melted in the crucible in a vacuum and slowly cooled to room temperature over a three week time period. LLNL typically uses platinum or pyrolytically coated (vitreous) carbon crucibles to minimize contamination of the crystal material. SIC engineers regularly throw out the first few batches of crystals due to excess contamination from their graphite crucibles. We are looking to providing the Chinese with coated graphite crucibles to help eliminate this problem.

Zone refined crystal is usually polycrystalline, whereas CZ crystal, when done properly, is single crystal. Photographs and summary viewgraphs accompanying this section describe the capabilities and the work in progress. In addition, small (2 g) quantities of BDH Fluortran, and SIC (sintered, and unsintered) barium fluoride have been delivered to Charles Evans and Associates for chemical analysis and comparison.

BaF2 Crystal Growing

- LLNL maintains a number of zone-refining and Czochralski process crystal growing systems. Experienced with growing fluorides of all kinds.

Program:

1. Growing crystals by the Czochralski (CZ) method from a high purity (Fiber Grade) melt with and without the additives of NH4HF2 and CF4 (the NH4HF2 is added to provide a defined amount of HF in a short duration and the CF4 is used to remove the residual OF3- or OHF2- which may be present in the starting material).

2. Growing crystals by the zone-melting (ZM) method which will zone-refine to eliminate or lessen the metallic impurities as well as F- vacancies.

3. The use of a reactive gas atmosphere processing (RAP) cycle with HF as the reactive gas prior to the growth process (this cycle is used to remove all adsorbed H20, oxides, and the oxy- and hydroxy-fluoride species.

4. If time permits, growing by the CZ method from melt prepared by both RAP and zone-refining to obtain both high purity and superior structural quality crystals.

5. Crystals will be evaluated for purity at LLNL and at Charles Evans and Associates. Radiation damage tests will be performed at Cal Tech.

BaF2 Crystal Growing

Milestones:

July 1: 1. BaF2 source material ordered.

July 7: 1. Pt/Ir furnace tube ordered.

Aug. 1: 1. BaF2 source material received from BDH, GFI, SIC and analyzed.

Aug. 9: 1. Czochralski (CZ) growth of single crystals with dimension of ~ 25 mm dia. x 50 mm length; crucible: Pt; atmosphere: 5-9 purity argon (will compare with NH4HF2 and CF4 additives as RAP agents).
2. Zone-melting (ZM) growth of single crystal; boat: Pt and coated graphite; atm: 5-9 Ar.
3. Reactive atmosphere processing (RAP) of powdered BaF2 (as received from vendor); RAP temp.: 1,000oC; boat: Pt; atm: HF; time: 4 hrs. at RAP temp.
4. Zone-refining and ZM single crystal growth of RAP'd mat'l; boat: Pt; atm: 5-9 Ar.

Sept 2: 1. Zone-refining and ZM single crystal growth of RAP'd mat'l; boat: coated graphite; atm.: 5-9 Ar.
2. Cut samples sent to CalTech for radiation damage analysis.
3. Final single crystal samples CZ grown, cut and polished for analysis.
4. Crystal samples cut, polished and analyzed at LLNL and CE&A.

FLUORTRAN

infrared glass material

BDH

BARIUM FLUORIDE Fibre Grade

Product Number 58155

BaF_2	MW	175.34
	SG	4.89
	Mp	1368°C
	Bp	2272°C

Melt grown; crystal fragments.

Mass-Spectrographic Analysis

Uranium	U	< .01	Ruthenium	Ru	< .02
Thorium	Th	< .01	Molybdenum	Mo	< .03
Bismuth	Bi	< .01	Niobium	Nb	< .01
Lead	Pb	< .02	Zirconium	Zr	3
Thallium	Tl	< .01	Yttrium	Y	< .1
Mercury	Hg	< .03	Strontium	Sr	30
Gold	Au	< .03	Rubidium	Rb	< .01
Platinum	Pt	< .03	Bromine	Br	0.6
Iridium	Ir	< .02	Selenium	Se	< .02
Osmium	Os	< .02	Arsenic	As	.3
Rhenium	Re	< .02	Germanium	Ge	< .03
Tungsten	W	< .1	Gallium	Ga	< .03
Tantalum	Ta	< .1	Zinc	Zn	.02
Hafnium	Hf	< .1	Copper	Cu	.01
Lutetium	Lu	< .1	Nickel	Ni	< .03
Ytterbium	Yb	< .4	Cobalt	Co	< .1
Thulium	Tm	< .01	Iron	Fe	.3
Erbium	Er	< .03	Manganese	Mn	< 0.01
Holmium	Ho	< .01	Chromium	Cr	< .01
Dysprosium	Dy	< .4	Vanadium	V	< .01
Terbium	Tb	< .1	Titanium	Ti	< .01
Gadolinium	Gd	-	Scandium	Sc	< 1
Europium	Eu	< .6	Calcium	Ca	10
Samarium	Sm	< .04	Potassium	K	.3
Neodymium	Nd	< .04	Chlorine	Cl	3
Praseodymium	Pr	< .1	Sulphur	S	3
Cerium	Ce	< .1	Phosphorus	P	1
Lanthanum	La	< 1	Silicon	Si	3
Barium	Ba	Base	Aluminium	Al	1
Caesium	Cs	< .01	Magnesium	Mg	< .01
Iodine	I	< .01	Sodium	Na	< .01
Tellurium	Te	< .3	Fluorine	F	Base
Antimony	Sb	< .06	Oxygen	O	-
Tin	Sn	< .1	Nitrogen	N	-
Indium	In	< .01	Carbon	C	-
Cadmium	Cd	< .03	Boron	B	.03
Silver	Ag	< .02	Beryllium	Be	< .01
Palladium	Pd	< .05	Lithium	Li	< .01
Rhodium	Rh	< .01			

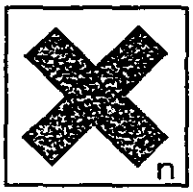

Harmful

All figures are quoted in ppm atomic

Harmful by inhalation and if swallowed.
Avoid contact with skin and eyes.

The sale of materials described in this data sheet will be covered by the General Conditions of Sale of BDH Limited, a copy of which is available on request.

BDH Limited, Broom Road, Poole, BH12 4NN, England. Telephone: National (0202) 745520 International +44 202 745520 Telex: 41186 and 418123 TETRA G. Cables: Tetradome Poole. Fax Group III: (0202) 738299

June 1989

Reactive Atmosphere Processing (RAP) station. This station is used for pre-treating crystal source material to remove water and metallic contaminants. Hydrogen fluoride gas is circulated through the canister as the sample material is heated.

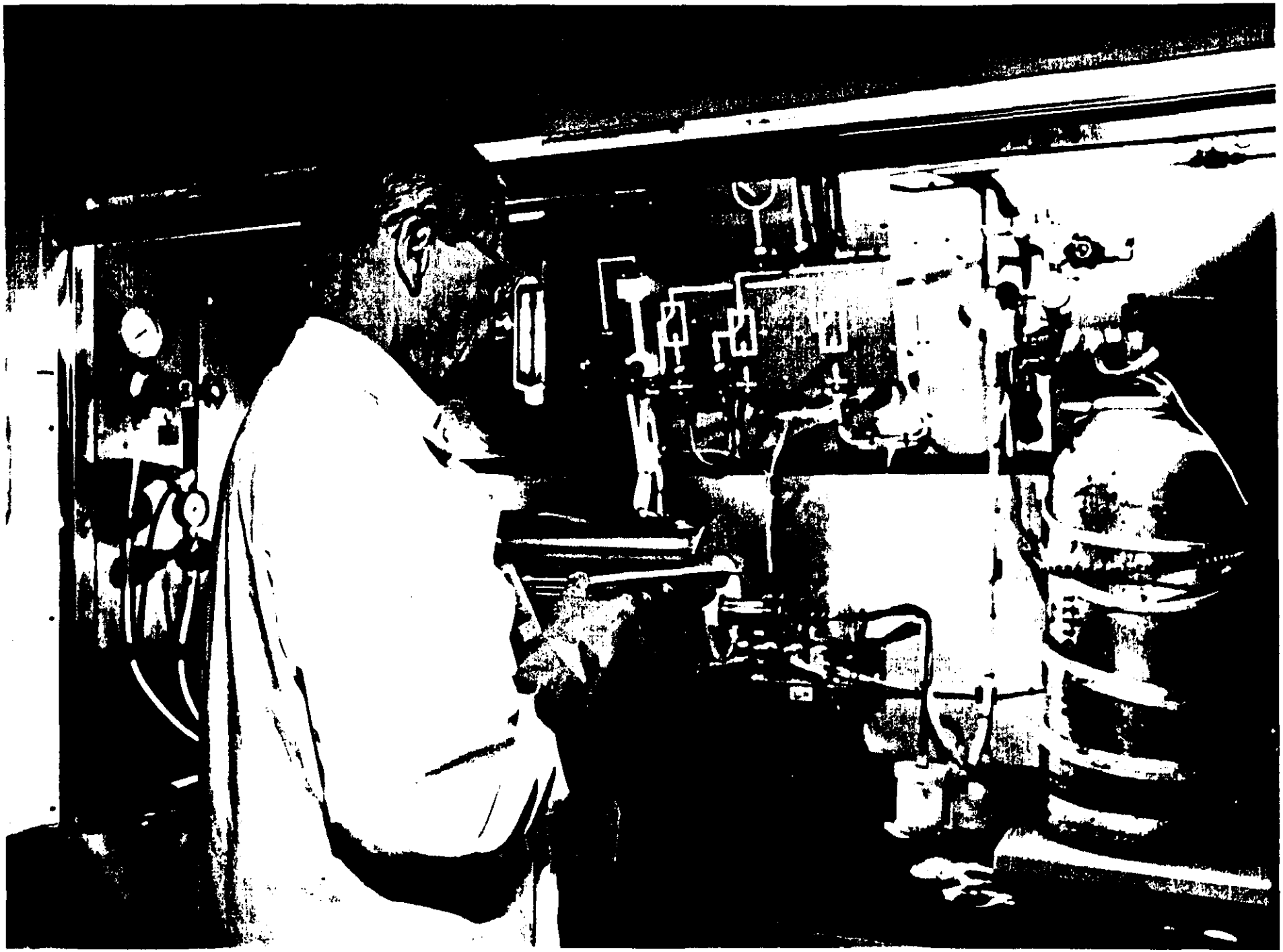

One of three zone-refining stations at LLNL. The technician is shown inserting a platinum crucible into the furnace tube. The heating element is the coil surrounding the tube. Newer versions of zone-refiners use a thin disk-shaped RF induction heater. The heater disk is translated across the melt sample at speeds of 1 to 10 mm/hr typically.

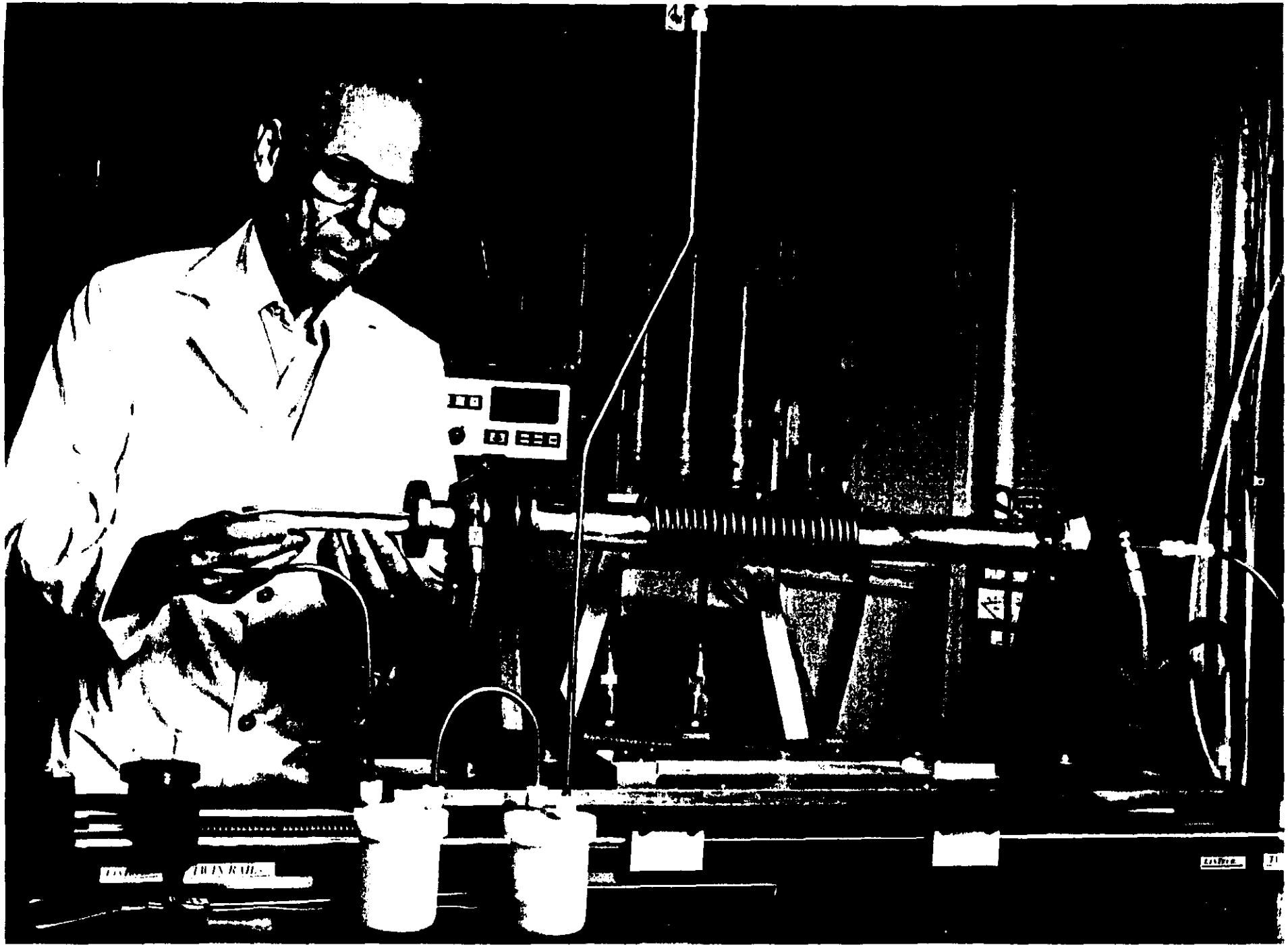

Platinum crucible with a zone-refined crystal sample after refining. Zone-refining is typically performed in an argon atmosphere although reactive gases such as HF can be introduced as well. Thermal gradients drive impurities to the ends of the melt leaving a central region of high-purity crystal (usually not single crystal) that can be used as starting material for Czolchrowski growing of single crystals.

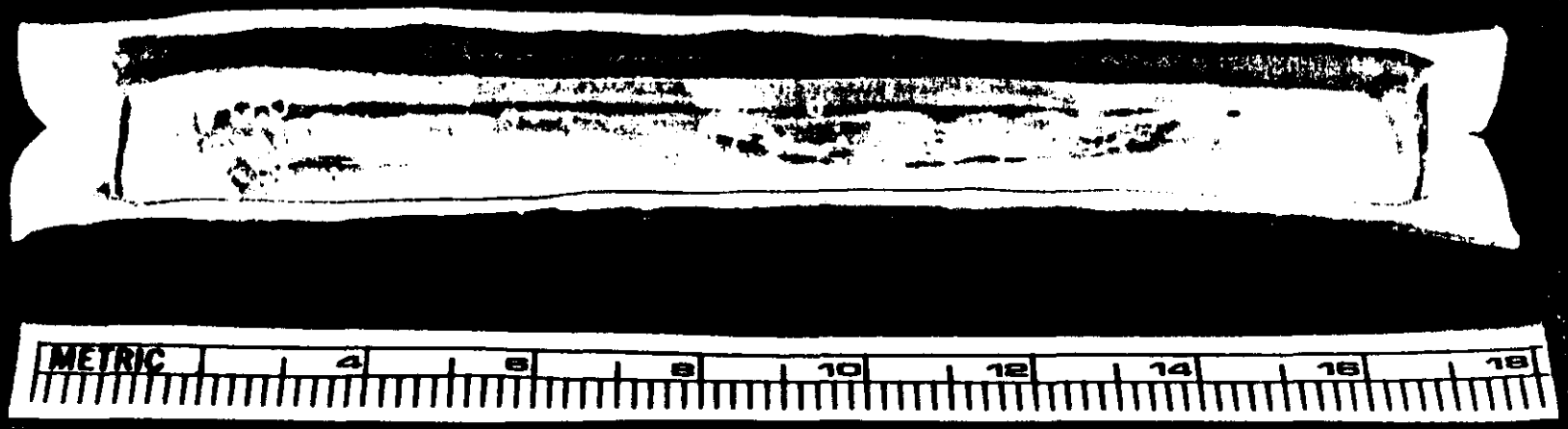
METRIC
4
6
8
10
12
14
16
18

One of two small Czolchrowski furnaces available at LLNL for growing doped or un-doped single crystals.

CZ-2

Large Czolchrowski furnace at LLNL used to grow the Gadolinium-Gallium-Garnet crystal shown in the next photograph. The furnace is mounted on air columns for vibration isolation.

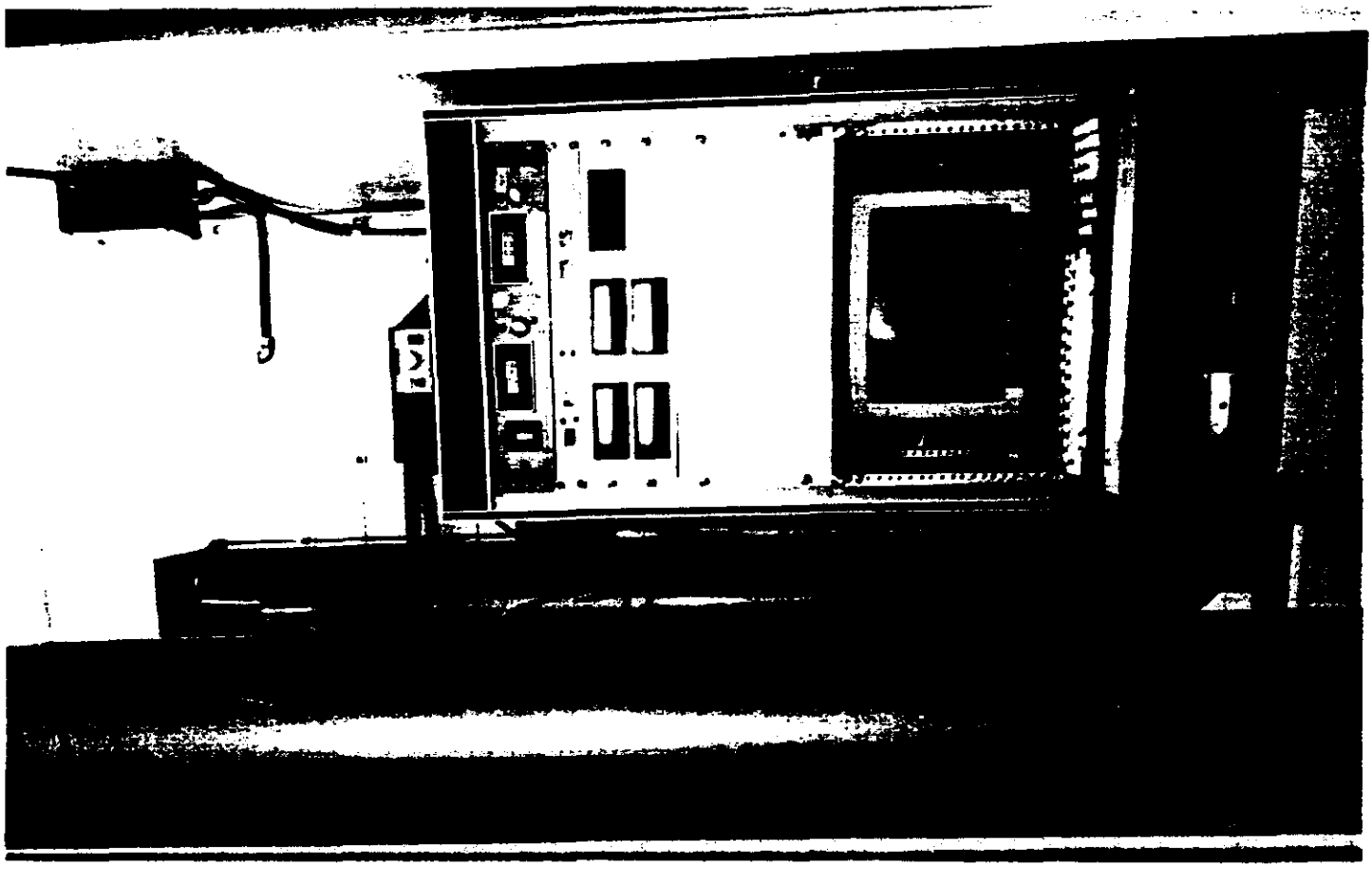

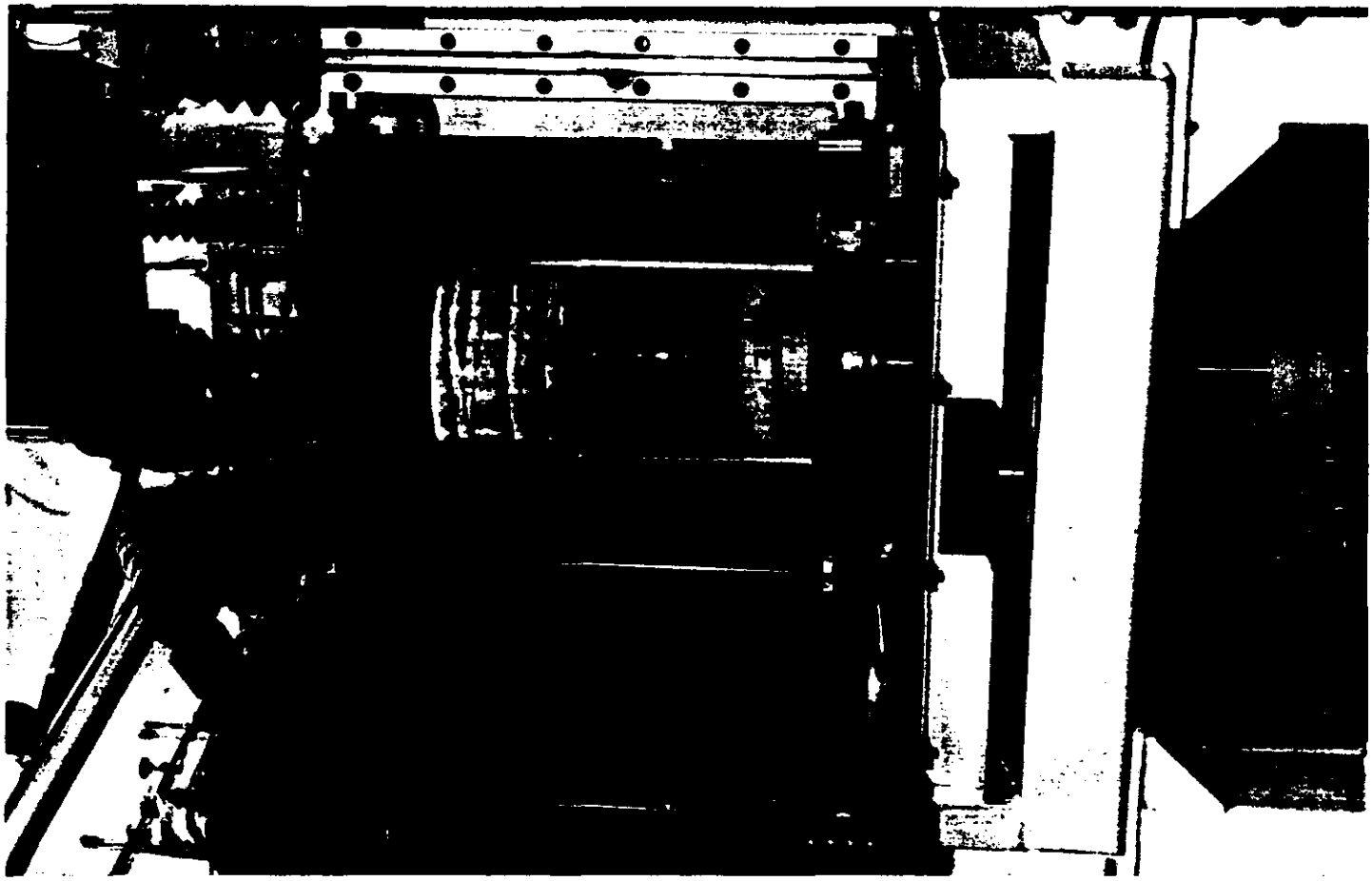

Control room for the large Czolchrowski furnace. The monitor shows the crystal melt looking down into the furnace tube.

ACURITE III

Gadolinium-Gallium-Garnet single-crystal grown at LLNL using large Czochralski furnace. The crystal is shown before and after cutting and polishing the end faces.

mm
INCH

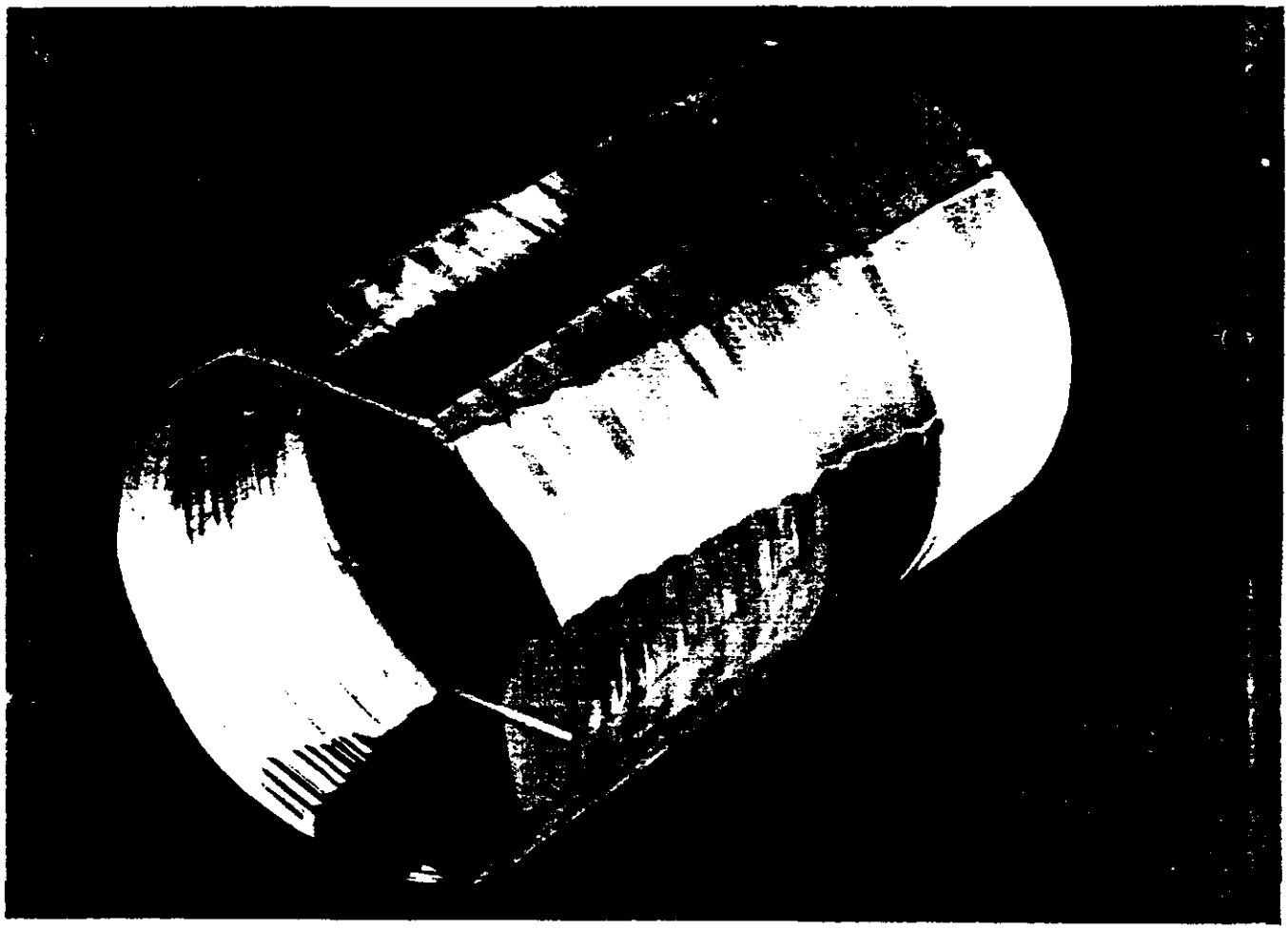

Chromium-doped fluoride crystal grown at LLNL using smaller Czochralski furnace. Size is typical of crystals available for test and evaluation.

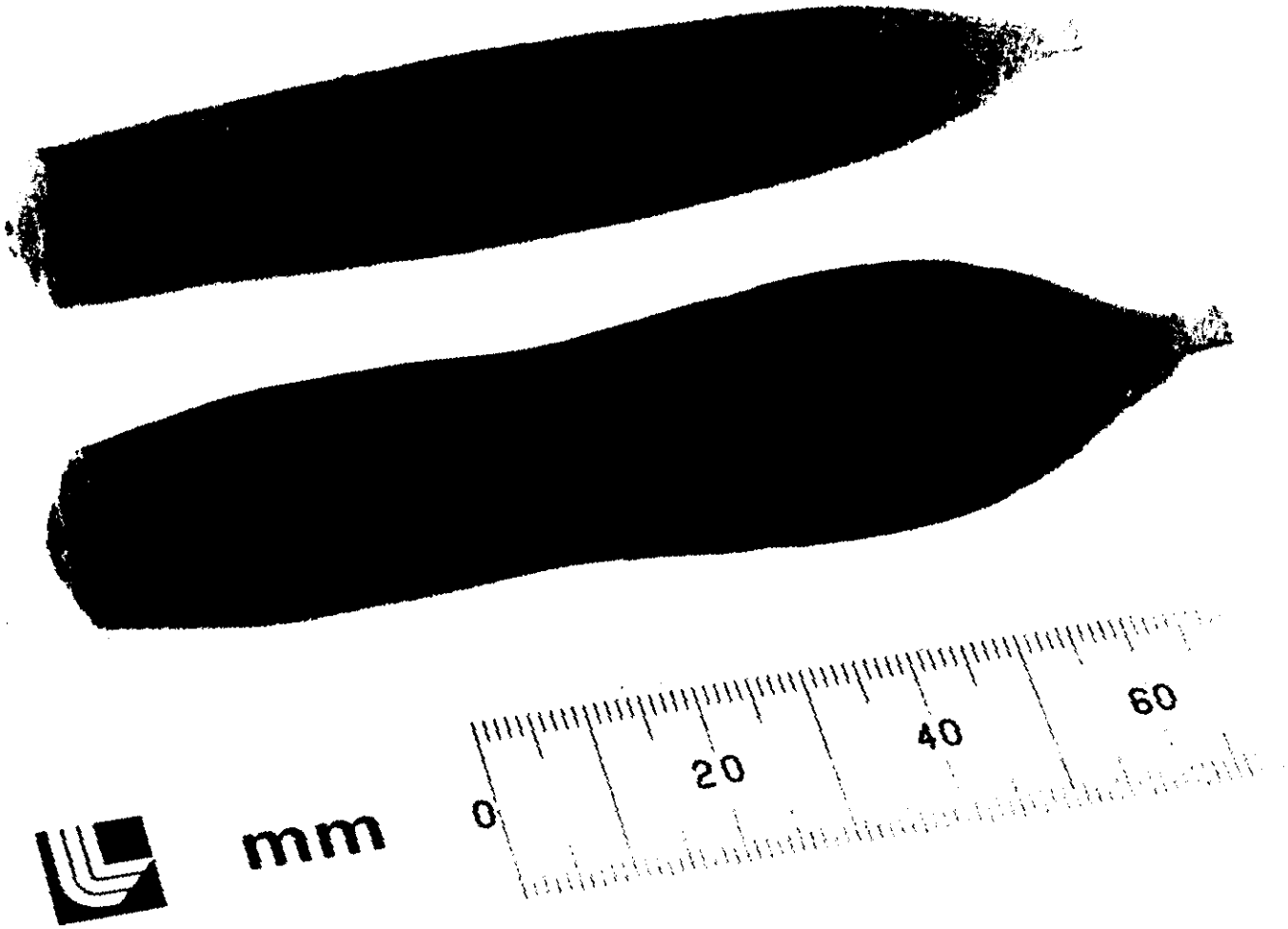
0
20
40
60
mm

4. Site visits to SIC, BGRI and the Zhongnan Optical Instrument Factory

A number of visits to China have been made by engineers and physicists over the past few months. In particular, Mr. Jack Heck of ORNL and Prof. R. Zhu traveled to China in late May to visit BGRI and SIC (see their reports for details). The purpose of this trip was to see the BGRI 4 m evaporative coating system, to discuss mechanical engineering details of the crystals and the titanium support structure with Chinese counterparts, and to assess the vacuum systems on the BGRI and SIC crystal furnaces. At this time it was learned that a factory in Hubei province - the Zhongnan Optical Instrument Factory (ZOIF) - was interested in developing the technology for the machining and polishing of barium fluoride crystals. This factory, originally built in the 60's for the support of the Chinese naval shipbuilding program, produces large optics (periscopes), small optics for cameras and optical instruments, as well as oil well drilling pipe and large hydraulics for hydro-electric power generating stations.

In July (July 6 - July 16) Michel Lebeau of LAPP/CERN and Craig Wuest of LLNL visited BGRI, SIC and ZOIF. Presentations were made at each institution on LLNL crystal surface preparation, coatings and crystal growing. Also, Mr. Lebeau met with engineers from Tsing Hua University to discuss the laser welding of the thin titanium structure that will hold the barium fluoride crystals.

In August, Mr. Ben Fuchs of LLNL and Mr. Jack Heck will visit BGRI, SIC and ZOIF, with emphasis placed on ZOIF to work with their engineers to implement the LLNL polishing techniques and to work out the details of the mechanical processing of crystals to the proper tolerances. Copies of the agendas of the LLNL travelers are included in this section.

A. BGRI Visit

At BGRI we had the opportunity to review work at LLNL. Emphasis was placed on coatings since BGRI has a very large 4 m diameter evaporative coating system. This system may be suitable for the mass production of crystal coatings. The vacuum vessel, however, is accessible only by lifting off the very heavy steel lid with an overhead crane, or by opening small (30 cm diameter) ports on the sides. Discussions were held on the feasibility of designing transfer stages that could be mounted to the side ports to allow crystals to be loaded into the chamber without having to pump the entire chamber volume down each time. It appears that a transfer stage could be designed that would allow the coating of crystals at the rate of at least 15 pairs (60 sides) per day. We have requested that BGRI supply LLNL with small samples of coated barium fluoride to assess the quality of the coating.

B. ZOIF Visit

Our visit to ZOIF was very productive and informative. It is clear that ZOIF has developed a fairly large production facility that is capable of producing fairly good quality optics. Their machines are somewhat simpler than those in the West but their cutting, grinding, polishing and lapping techniques are very similar to those used at LLNL and elsewhere. It is obvious to us that a minimal amount of effort will be required to give the ZOIF engineers the capability to produce LLNL-quality surface finishes. Facilities at ZOIF are somewhat primitive, however, and it would be important to spend some effort to provide ZOIF with capital improvements such as air condi-

tioning and humidity control, as well as dedicated production, characterization, storage and packaging areas.

We have already mentioned the quality of the ZOIF polished surfaces in Section 1. We have received from ZOIF a fully machined and polished crystal pair based on specifications provided to them by Mr. Jack Heck of ORNL. The crystal, unfortunately, arrived at LLNL damaged. However, the large half of the crystal pair was sufficiently intact to allow coordinates to be measured at multiple points on all six sides using a Sheffield Coordinate Measuring Machine (CMM). These measurements can be compared to the optical methods used at ZOIF and to the specification. In general the crystal measurements are within specification except for a few transverse dimensions. A table of figures and a sketch with the CMM measurements is included in this section.

The ZOIF crystal is a very good job considering this was their first attempt. Accompanying this section is a series of reports from ZOIF (in Chinese) describing their processing and measurements of this crystal as well as methods to polish multiple crystals based on their preliminary understanding of the LLNL polishing fixtures.

Our visit to ZOIF resulted in the preparation and signing of a Letter of Intent to produce a specific set of crystals for our short term program. In addition, references to a possible longer term program were made to help ZOIF to put this program in perspective. The LOI emphasized the highly conditional nature of the SSC and the Barium Fluoride Collaboration and that their work was very important to allow reviewers to assess the viability of production of barium fluoride in China. A copy of this letter (typed after our return to the US) is included and details deliverables to LLNL in the month of August. A handwritten version of the letter was signed at distributed to ZOIF, BGRI, SIC and LLNL.

While at ZOIF we were accompanied by Prof. Z. Z. Dai of BGRI and Prof. P. J. Li of SIC as well as other SIC personnel.

C. SIC Visit

Our final visit was to the SIC Jiading facility, hosted by Prof. Li and Prof. Z. W. Yin. We presented our work on LLNL crystal growing and toured the crystal growing facility at Jiading. Also, a representative from British Leybold (Hong Kong) visited to have a look at the vacuum systems and to make recommendations. It is clear that there is much room for improvement on the vacuum system. Outdated Chinese mechanical and diffusion pumps are used with reduced pumping capacity because of many bends in the coupling tubes and the lack of cold traps. Vacuum is monitored only near the pump with ion gages and not in the furnace bell jar so it is difficult to assess the quality of the vacuum. It is not clear how the porous graphite crucibles effects the crystal quality. As mentioned earlier, the first few sets of crystals are thrown away. Thus the crucibles appear to bake out over time. Replacement with coated graphite crucibles might help this situation. Also, residual gas analysis (RGA) would be a useful tool to tell the sources of contamination. Leybold is very interested in helping to supply SIC and BGRI with new vacuum equipment. Many parts are easily fabricated in China and Leybold maintains a number of offices in China. Also, there is the possibility of loaning a Leybold RGA to SIC for a period of time. LLNL will also look into vacuum system prices in the US for comparison to European and Chinese prices.

D. General Impressions

Our Chinese collaborators are clearly very interested in supporting as much of the barium fluoride production as possible. While their facilities are not up to western standards it seems that they can still produce high quality mechanical processing and polishing. Crystal growing is still needing improvement, however it is fairly straight-forward to improve vacuum systems and crucibles as well as source material. It is hoped that work at LLNL and elsewhere can guide the Chinese to the proper choices for growing high quality crystal.

With regard to mechanical processing at ZOIF, there is sufficient manpower and space to implement a dedicated production facility. One of the drawbacks at ZOIF is the rather remote location of the factory (about 8 hours by car from Wuhan, the closest airport). Factory representatives indicated that they are planning to move facilities to the coast in the next year or so. If this happens, it will certainly allow for much easier access and faster shipping of materials between east and west.

We are impressed with the technical skills of engineers at ZOIF, SIC and BGRI as evidenced by samples of crystals we have received at LLNL for analysis. In particular, ZOIF is very close to being able to implement the LLNL polishing procedure. It is anticipated that our August visit will result in the full implementation of this procedure at ZOIF.

Because of the urgency of presenting as much work as possible in the month of August, we have pressed our colleagues in China and they have responded rather well, to the point of canceling trips and rearranging schedules to satisfy our demands. We are encouraged that they have demonstrated the willingness to accommodate our rather difficult situation.

中国科学院上海硅酸盐研究所
SHANGHAI INSTITUTE OF CERAMICS
CHINESE ACADEMY OF SCIENCES

1295 Ding-xi Road, Shanghai 200050, China
Tel: 2512990 Telex: 33309 ASSIC CN FAX: 86-21-2513903

Itinerary and phone numbers for Craig Wuest travel to Dallas/China

July 1: travel from Oakland to Dallas:
DL 815 1 Jul Oak-DFW 2:15P-7:40P

July 2-3 meeting at SSCL
phone contact Dr. George Yost,(214) 708 6027
accommodation at Holiday Inn DeSoto
phone: (214) 224 9100, fax: (214) 228 8238

July 4-5: travel from Dallas to Tokyo:
DL 1717/51 4-Jul DFW-PDX-NRT 8:16A-10:00A, 1:30P-3:35P (+1)
night of July 5 in Tokyo at Narita International Hotel
phone: 011-47-609-31234

July 6: travel from Tokyo to Beijing:
JL 781 6JUL NRT-PEK 10:00-13:15 together with Dr. M. Lebeau of CERN

July 7-8: meeting at Beijing Glass Research Institute
organized by Prof. Dai Zizhong and Wen Ou
phone: 011-86-1-701-3092, fax: 011-86-1-511-2478

meeting at Tsing Hua University Beijing
organized by Dr. Shang Rencheng

July 8-9: travel from Beijing to Zhicheng City, Hubei Province

July 10: meeting at Zhongnan Optical Instruments Factory in Zhicheng City
organized by Dr. Zhang Chunyuan
phone: 011-86-7-22-271, fax: 011-86-7-22-452

July 11: travel from Zhicheng to Shanghai
accommodation at Jing An Guest House
phone: 011-86-21-255-1888, fax: 011-86-21-255-2657

July 13-14: meeting at Shanghai Institute of Ceramics
organized by Prof. Yin Zhiwen at Jiading plant
phone: 011-86-21-251-2990, fax: 011-86-21-251-3903

July 15: meeting at Shanghai Institute of Ceramics
at Jiading plant with Prof. Li and Mr. P. Bentley of Leybold
Hong Kong

July 16: departure from Shanghai to San Francisco for Wuest:
UA 858 16-JUL SHA-SFO 2:10P-10:20A

Itinerary and phone numbers for Ben Fuchs', and Jack Heck's travel to China

August 13 - 14:	travel from San Francisco to Tokyo:
	UA 837 13 AUG SFO-NRT 13:45-16:20 (+1)
	night of August in Tokyo - hotel not known
August 15:	travel from Tokyo to Beijing:
	JL 783 15 AUG NRT-PEK 9:00-13:15 together with Mr. Jack Heck of ORNL
August 16 :	Sunday - meetings or rest?
August 17:	meeting at Beijing Glass Research Institute organized by Prof. Dai Zizhong also meet at BGRI with Tsing Hua University Beijing organised by Dr.Shang Rencheng phone: 011-86-1-701-3092, fax: 011-86-1-511-2478
August 17:	travel from Beijing to Wuhan, Hubei Province assume departure in PM and stay overnight at Hsuan Kung Hotel in Wuhan - tickets to be arranged by Prof. Dai at BGRI
August 18:	drive to Zhongnan Optical Instrument Factory in Zhicheng City, Hubei Province organised by Mr. Li Shunxi, Mr. Zhang Chunyuan phone: 011-86-7-22-271, fax: 011-86-7-22-452
August 19-22:	Discussions and work at Zhongnan Optical Instrument Factory accomodations to be determined by Chinese Hosts.
August 23:	Drive from Zhicheng City to Wuhan and depart Wuhan in PM for Shanghai. Tickets to be arranged by Chinese Hosts.
	accomodation in Shanghai at Jing An Guest House phone: 011-86-21-255-1888, fax: 011-86-21-255-2657
August 24, 25:	meeting at Shanghai Institute of Ceramics Jiading Plant organised by Prof.Yin Zhiwen phone: 011-86-21-251-2990, fax: 011-86-21-251-3903 stay at Jiading Hotel
August 26:	departure from Shanghai to San Francisco for Ben Fuchs and Jack Heck
	NW 78 26 AUG SHA-NRT 10:55 - 15:15, UA 828 16:30-9:45 NRT-SFO

Coordinate measuring machine (CMM) dimensional measurements of a large crystal half received from the Zhongnan Optical Instrument Factory. The crystal arrived at LLNL slightly damaged, however good surfaces were available on all six sides to allow a complete mapping of the crystal dimensions, surface flatness, perpendicularity and angles. A table follows which compares the specified values, the values measured on this crystal by engineers at Zhongnan and the CMM values measured at LLNL.

3.1566
gnr'l shape

10. JULY, 1992

USING THE ...
FIND THE EQUATIONS
OF THE FOUR LOWER PLANES (BEST FIT)
FIND THE
ANGLES AT WHICH
THE PLANES
INTERSECT, 90°, 90°
α, 90-α. FIND
THE ANGLES AT
WHICH THE FOUR
PLANES INTERSECT
A PLANE PERPENDICULAR
TO DATUMS A, & B

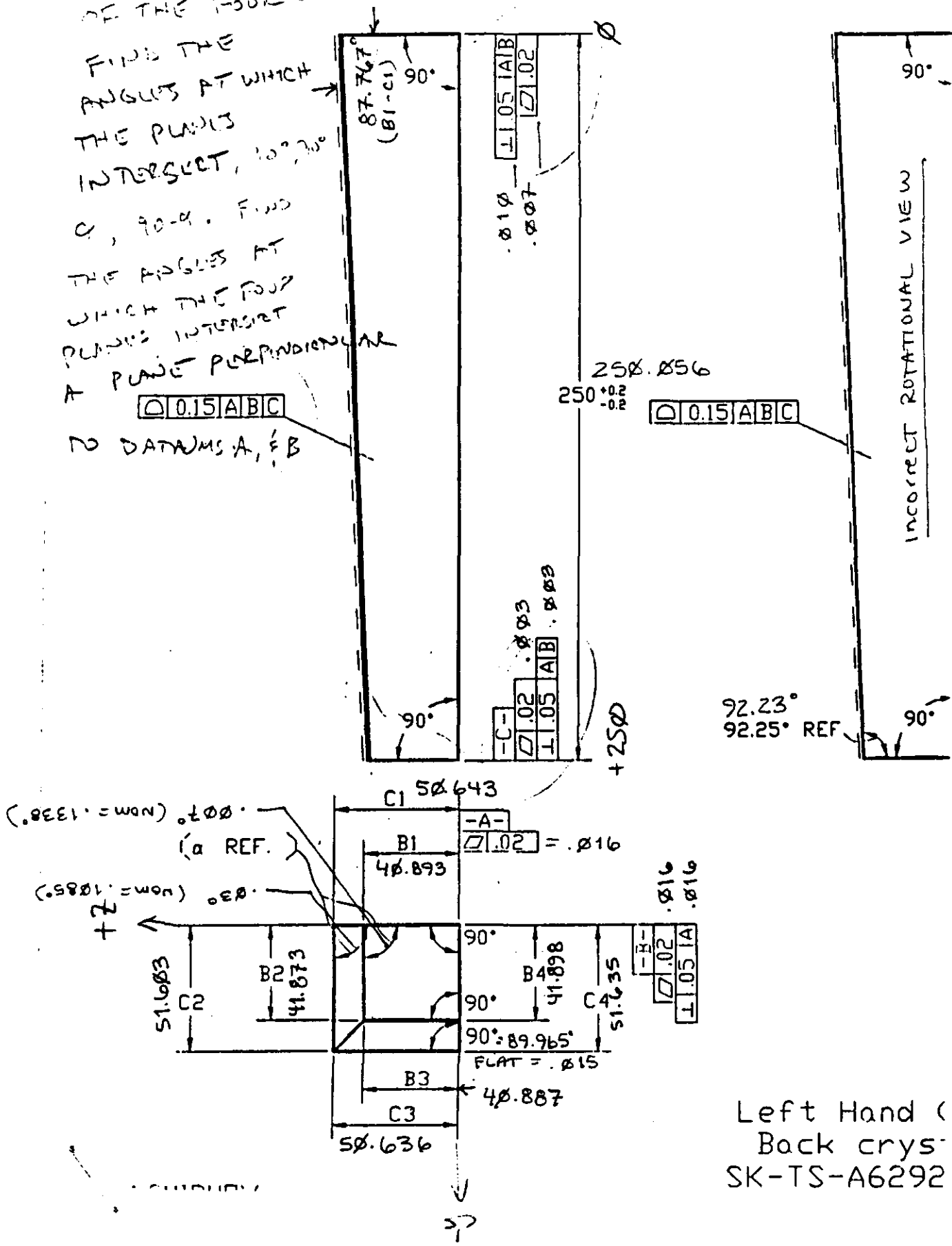

Left Hand (
Back crys
SK-TS-A6292

Measurements made on a large crystal half machined and polished at the Zhongnan Optical Instrument Factory. Zhongnan used a variety of optical methods to determine coordinates. LLNL utilized a Sheffield coordinate measuring machine which contacts the BaF2 surface with a pressure of about 2 g and provides spatial coordinates with an accuracy of about 0.005 mm. Specifications have changed slightly in the time this crystal was fabricated. This is intended to show the relative error in the meaurements available at the Zhongnan Factory and the ability of engineers at Zhongnan to deliver within specifications. In general the dimensions are quite good considering this was their first attempt to fully machine and polish a crystal pair.

Measurement	Specification	Zhongnan	LLNL	*in/out of spec*
Joint Surface (mm)				
B1	41.02 - 0.30	40.89	40.893	in
B2	41.32 - 0.30	41.57	41.873	out +0.55
B3	41.09 - 0.30	40.38	40.887	in
B4	41.32 - 0.30	41.88	41.898	out +0.58
End Surface (mm)				
C1	50.84 - 0.30	50.59	50.643	in
C2	51.82 - 0.30	51.57	51.603	in
C3	50.92 - 0.30	50.81	50.636	in
C4	51.82 - 0.30	51.57	51.635	in
Length (mm)	250 +/- 0.30	249.94	250.056	in
Angle (degrees)	92.25 +/- 3'	92.25	92.23	in
Perp. side vs. side surface (mm)	0.04	0.03	0.016	in
Perp. end vs. side surface (mm)	0.02	0.01	0.01	in
Perp. joint vs. side surface (mm)	0.02	0.02	0.03	out
Par. side vs. side surface (mm)	0.02	0.01	0.015	in
Surface flatness (mm)				
A	0.01	0.0015	0.016	out
B	0.01	0.002	0.016	out
C	0.01	0.0025	0.015	out
Alpha (degrees)	90.09	N/A	90.11, 90.14	N/A

关于在1994年~1997年四年中共加工完成1.56万对BaF2闪烁晶体的可行性分析报告

一、 基本情况：

中南光学仪器厂与北京玻璃研究所合作为美国超导超级对撞机工程研制和生产BaF2闪烁晶体。

由美方提供图纸，北京玻璃研究所提供BaF2 晶体材料，中南光学仪器厂负责加工成型。

1、 1994年~1997年共加工完成BaF2晶体1.56万对。

2、 每年平均完成4000对。

3、 每月平均完成350对。

4、 每天完成14对。

二、 工艺试验，样品生产及检测方法有了良好的进展。

在过去的一年多时间里，通过试制和组织工艺攻关，对BaF2闪烁晶体的物理、化学性能及加工工艺， 检测技术有了比较全面的了解，并先后加工了三对样品，经本厂测试，检查及权威机构的鉴定，主要技术要求基本符合

图纸要求。这项工程的试验将继续下去，可望在1992年底以前在技术方面（加工工艺、测试方法）有进一步突破，为批量生产提供可靠的技术保证。

通过工艺试验和样品生产培养和锻炼了一批晶体加工的专业技术人员。

三、 批量生产存在的问题及措施：

1、 问题：

(1) 专业人员数量和素质不能满足批量生产的要求。

(2) 目前工厂的设备不能满足和适应晶体的批量生产。

(3) 对所加工的BaF2晶体材料的物理、化学性能有待进一步认识，对加工晶体所需的材辅料有待进一步优选。

(4) 加工工艺还不成熟，工装夹具可靠性较差。

(5) 现有工房和环境无法保证晶体正常的生产。

(6) 测试仪器还不能全部满足和反映出零件的本来面目。

2、 措施：

对此，工厂决定决定投资250万元，主要用于：

(1) 组建一条占地约800平方米晶体生产线。

(2) 进行批量生产的工艺试验，设计有关工夹量具。

(3) 改造或购置必须的设备。

(4) 增添必要的检测仪和检测人员。

(5) 培养60~80人的晶体加工专业人员。

以上工程将于1993年上半年全部结束，并为晶体的批量生产作最后的实质性的准备。

中 南 光 学 仪 器 厂

一九九二年六月

氟化钡闪烁晶体制造工艺简介

中南光学仪器厂

各位先生：

我厂于91年6月与北京玻璃研究所合作BaF_2晶体四棱锥体零件研制工作，一年来我技术人员据新材料工件、技术要求高，形状特异的特点，首先对材料的工艺可加工性能进行反复试验，对工件所需设备、工艺方案考核修改，获取许多晶体加工的宝贵技术数据，从而制造工艺有了突破性进展，我厂先后制造了三对晶体样品（360mm、150mm、250mm各一对正四棱锥体，250mm一对直角四棱锥体），通过我厂检验部门严格检测，其主要各技术要求达到、高于设计要求，下面我从材料试验、制造工艺二方面向各先生作以介绍：

一、氟化钡（BaF_2）晶体材料三种性能试验

为了制订合理、可行的晶体样品试制工艺，进而为批量制造工艺提供科学依据。我们对材料下列各项性能进行考察：

1、材料的热稳定性，通过二十次试验，从实践、理论上确认晶体为抗御热冷能力极差材料，且总结出晶体（BaF_2）加工工房最佳值为25℃±2°，工件加工预热时应在电热干燥箱内进行，其工艺参数为：110℃～150℃（升温值）每分钟升温不超过0.5℃，定温50分钟以上为宜，

基本上掌握了温度变化对材料影响的规律。2、材料化学稳定性：在试验中我们将晶体置于蒸馏水、煤油、机油、汽油、酒精、乙醚等液体蛙观察，发现水对粗糙度0.05um以下的晶体表面产生分解，从而因水与氟离子发生化学反应，而留下水印，在粗糙度0.2um以上的表面反应甚微。晶体对乙醚、酒精、汽油、机油等几乎不产生反应。3、材料机械稳定性：BaF_2晶体即脆又软是该材料一大特征，在我厂现有设备上，通过锯切、磨、铣、抛试验，摸索出机械强度差、耐磨性低的材料加工方法、检测方法。如设备应转速低、振动小、锯片薄，磨材：颗粒细而均匀，检测工具材料：以软为主（成型）。

二、氟化钡晶体批量制造工艺方案

1、工艺流程

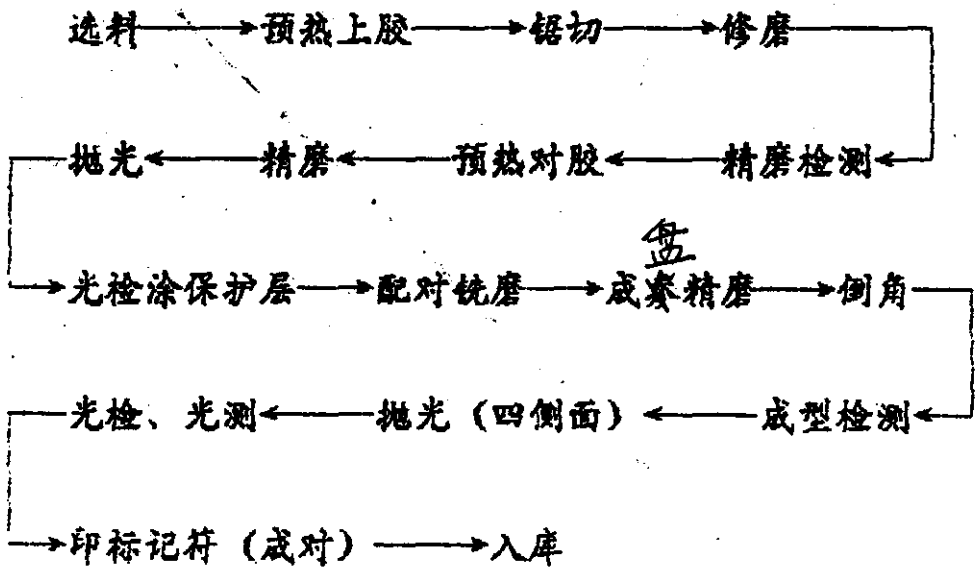

2、晶体制造工艺特点、工艺分析、工艺措施

由晶体软而脆、化学稳定差的本性，所以工艺特点应为锯、铣、磨、抛以磨为主，切、铣结合，检测先机（接触测量）后光（非接触测量），光、机结合。

① 锯切：按作业指导书，将晶体坯料、保护玻璃及锯切夹具同时放入电热干燥箱内加热后，涂粘结剂把晶体、保护玻璃粘结在夹具上，待自然冷却后，在万能光学铣床或内圆切片机用0．8mm厚金刚石锯片切去两端保证平行差在0．05mm以内。（锯切原理见示意图1）

② 磨：设备、粗磨单轴机（机械传动），精磨单轴机（液压传动）将Φ400mm平模装在粗磨单轴机上，转速调止120～200转/分，用240#、320#金刚石磨料，粗加工："1"、"3"、"4"面，保证"1"与"3"面，"1"与"4"面及"3"与"4"面⊥不大于0．01mm，在精磨机上（转速为9～15转/分），用303#、303#1/2金刚石磨料，重复上面加工，保证⊥0．005mm，表面粗糙度0．1um（检测原理及方法见示意图2、3）。以"1"面为基准各90°面对胶成正棱锥体、上胶模、加工"2"面，保证与"1"面平行差不大于0．005mm，检长度尺寸（测量方法见示意图4、5）。

③ 铣：按作业指导书及示意图6，分别以"3"、"4"为基准将晶体成对粘结在铣夹具上，选用Dm=

300mm金刚石砂轮在PM500铣磨“5”、“6”面，检测大小端面尺寸达工序要求（见示意图7）。

④ 精磨：在精磨单轴机（液压传动）上，用303#、303 1/2金刚石磨料加工“1”、“2”、“3”、“4”、“5”、“6”面，保证□0.01mm、⊥0.005mm、//0.005mm表面粗糙度0.1μmm及各种尺寸精度要求（测量方法见示意图1～7）。

⑤ 抛光：成型后的晶体，在液压传动抛光机上，选用无水固着抛光液及65℃Φ500mm抛光（火漆）模（主轴转速15转～20转/分）对各表面进行加工，用Φ100平面样板检□要求，用比较法检表面粗糙度0.01um，工件取下后光测各技术要求（加工意示图见8、9）。

⑥ 倒角：用夹具在机床上，将砂轮偏转45°，加工晶体各45°要求（见示意图10）。

以上仅是我厂制订的批量生产工艺方案，望各位专家先生，提出批评意见。

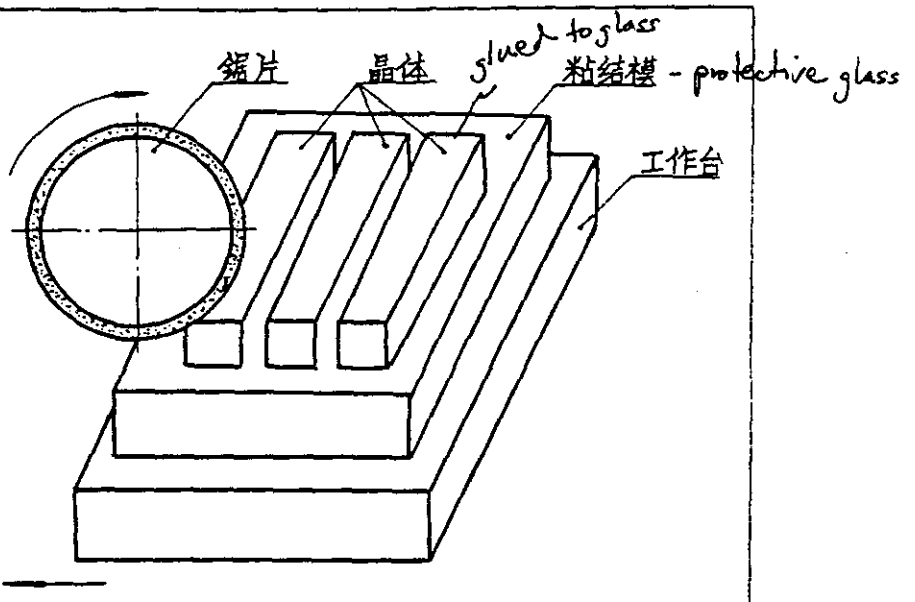

晶体锯切示意图

Fig 1

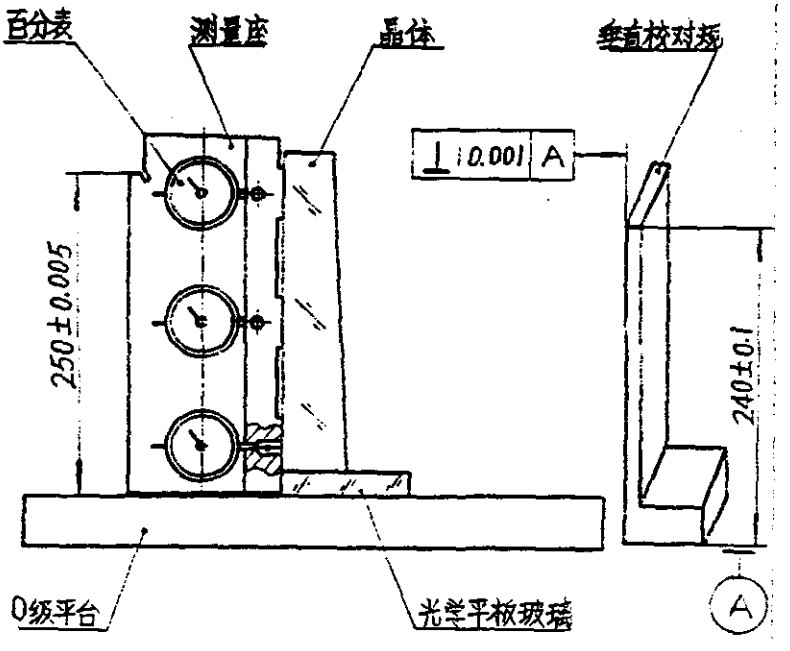

长度、垂直度⊥测量仪

Fig 2

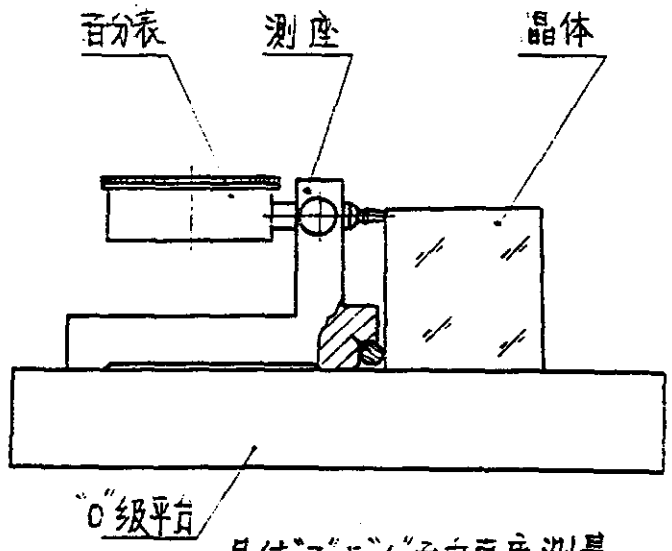

晶体"3"与"4"面垂直度测量

Fig 3

小端磨抛示意图

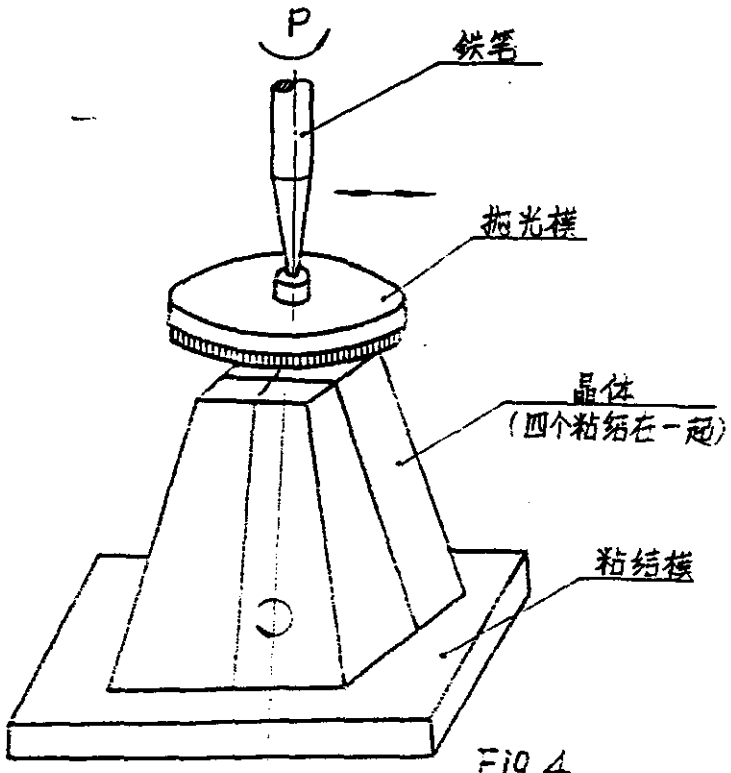

Fig 4

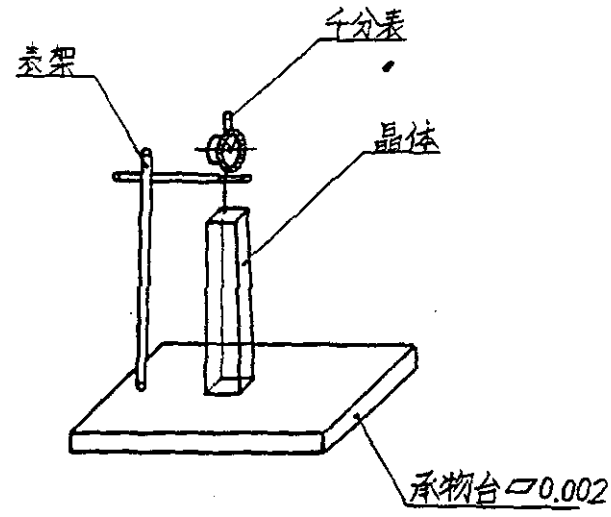

晶体两端平行差检测仪

注：与垂直仪长度测量配合使用

Fig 5

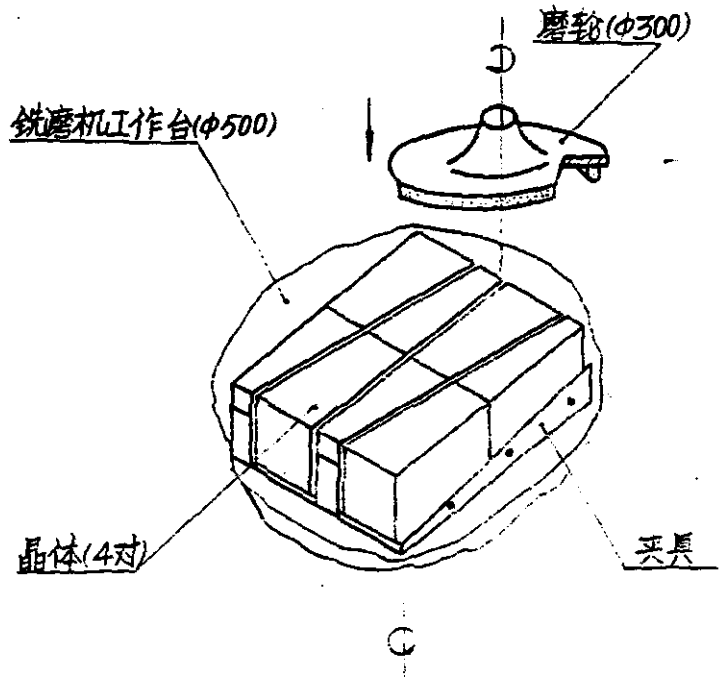

晶体装夹及铣、磨示意图

Fig 6

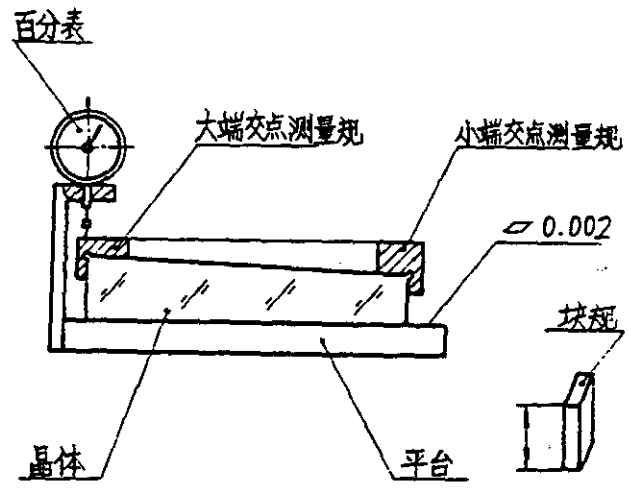

大端尺寸检测仪

Fig 7

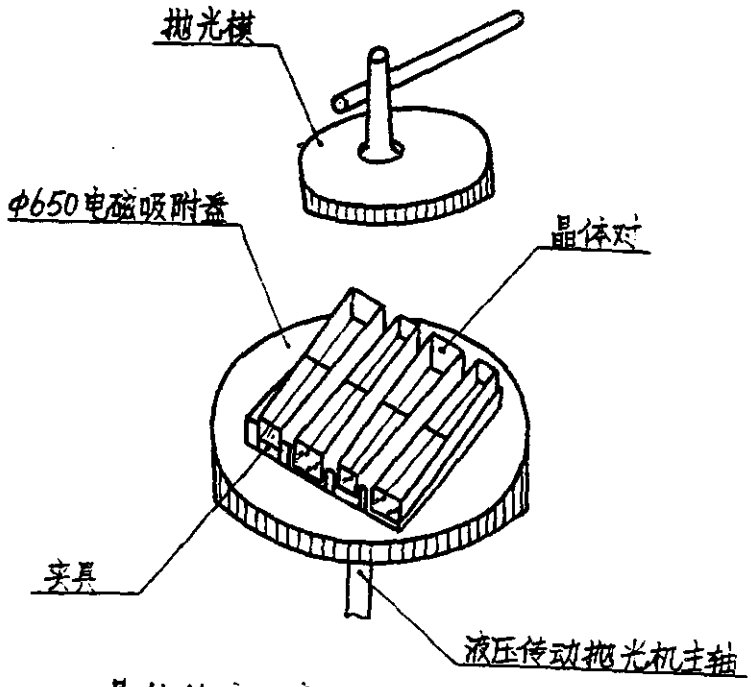

晶体抛磨示意图

Fig 8

倒各面45°角示意图

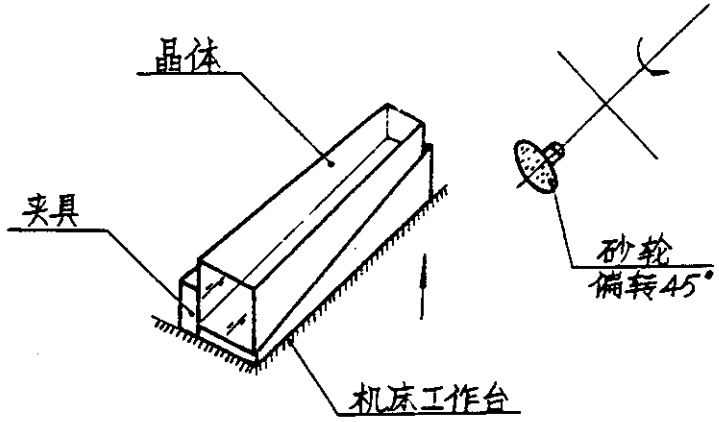

Fig 9

晶体制造工艺流程

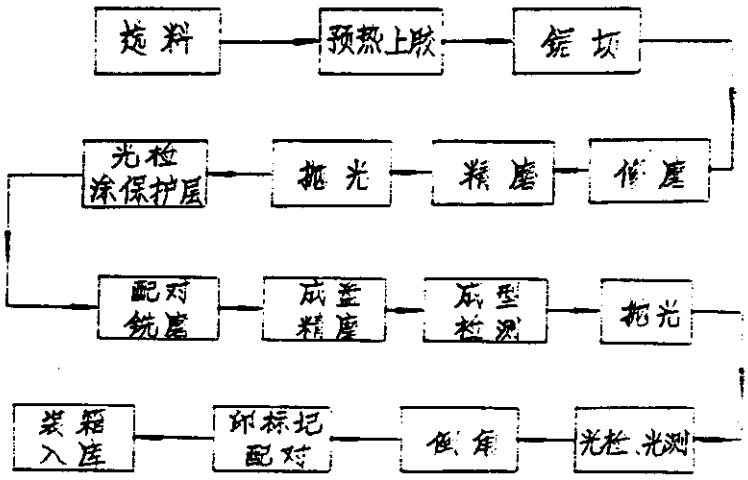

Fig 10

中国船舶工业总公司
国营中南光学仪器厂简介

一、工厂概况

国营中南光学仪器厂（以下简称工厂）位于湖北省枝城市，隶属于中国船舶工业总公司（CSSC），工厂占地面积38万平方米，拥有固定资产5000万元，现有职工2400人，其中工程技术人员320余人，高级工程师33人，拥有各类设备1200多台，其中高、精、尖大型设备和进口设备100余台，精密光学仪器制造，长轴、深孔机械加工是本厂的技术优势、现已形成年工业总产值6000万元的综合生产能力，成为制造精密光学仪器、石油机械设备、水工机械设备的大型综合企业。

工厂建于一九六五年，一九六八年投产。一九六九年扩建第二期工程。二十六年来，工厂的生产经营走过了一条创业，开拓，不断发展的曲折道路。改革开放以来，工厂遵照"以经济建设为中心"的指导思想，坚持质量第一，坚持技术、人才、市场三位一体的开发和企业内部的配套改革，生产经营面貌为之一新，企业经济效益和社会效益及其管理水平都有了显著提高。

一九八O年以来，工业总产值（按一九八O年不变价格计算）平均每年以16·33%的速度递增，利税总额平均每年以17%的速度递增。一九九一年，（按一九九O年不变价格计算），实现工业总产值4224万元；利税总额达到807·7万元，创历史最好水平。

精神文明建设和企业管理工作亦取得了显著成效，先后被评为全国设备管理先进单位，船舶总公司设备管理先进单位，船舶总公司设备管理优秀单位，安全生产先进单位，湖北省清洁无害工厂等。

一九八九年，工厂各项管理基础工作及经济效益指标达到国家二级企业标准，一九九O年六月、被评定为国家二级企业。同年十二月，被评定为船舶总公司多种经营先进单位及集体企业先进主办单位；同时安全性评价复评合格，达到国家安全级企业标准。一九九一年被船舶总公司评为“质量效益型”先进企业。

二、经营开发

改革十年，工厂以雄厚的技术优势。在延伸光学产品开发的同时开发了石油、水电等国家支柱产业开发产品近百种，产品系列有：　　（1）　光学产品：我厂拥有一批光学设计技术人员，光学专业（含光学结构）的高级工程师有10人。有一支熟练的光学加工

队伍，光学零件生产车间职工200余人，其中技师3人。光学专用设备有200多台（套）。其中，棒料切割机，内圆切片机，平面粗磨机，立式铣磨机，单轴或多轴粗磨机及抛光机共有60余台，以上设备能直接用来加工各种棱镜、反光镜、光学窗口零件，也可以加工晶体材料。用于透镜生产的半自动铣磨机，高速精磨、抛光机和各种磨边机也有60余台。其他还有各种真空镀膜机，精密照相刻度设备。车间光学工艺员有7人，光学检测员20余人，加上严格的检测手段和完善的质量保证体系能够批量生产高精度的光学元件和产品，光学产品在不断开发下，工厂已形成多种光学系列产品：

1、F35、F38、F40照相机镜头；

2、多种摄像机附加镜头；

3、16mm和35mm各种焦距电影放映镜头；

4、各种规格立体电影偏转镜；

5、佳能小西六理光复印机镜头和高反射率反光镜；

6、大型偏光应力仪；

7、20或40倍旅游望远镜，油田井位监视望远镜；

8、各种电弧炉观察镜；

9、20线对/mm或60线对/mm各种长度光栅尺；

10、各种规格复合偏振片；

一九九一年五月与北京玻璃研究所合作，进行BaF_2闪烁晶体的加工试验，前后试制了长度尺寸150、250、350mm端部尺寸30×30，40×40，50×50mm等各种规格的BaF_2晶体样品。

（2）石油机械产品。包括CYB（d）T抽油泵系列，井下工具及工装等。抽油泵为我厂一大拳头产品，其中：整泵筒抽油泵是我厂利用国外先进技术开发的换代新产品。在全国十七家大油田中，已有十六家使用我厂三峡牌抽油泵。一九九0年我厂生产抽油泵5500台，其中整筒泵600台；已形成生产抽油泵8000台，整筒泵2000台的生产能力。

（3）水工机械产品。包括水轮发电机电液调速器、水电站液压启闭机等。电液调速器瞄准瑞典KMW机先进水平，一九八八年以来为八盘峡水电站、沙溪口水电站、宜昌葛洲坝水电站调速器改造提供设备；液压启闭机E.投标中标，为装机140 万千瓦的福建水口水电站和装机120 万千瓦的湖北清江隔河岩水电站提供设备。

目前，互厂已为隔河岩水电站制造完成了出力500吨，缸径560毫米，行程11·3米的快速门液压启闭机油缸。缸筒内径进出口锥度为0·05毫米，表面粗糙度0·4，完全符合图纸设计要求。另水口水电站出力400吨，缸径500毫米，行程14·3米的快速门液压启闭机油缸正在施互中。

近两年来又相继完成了上海宝钢50吨、80吨脱锭油缸、镇江1200吨锚链拉链机油缸，上海港链斗机变幅缸，船用三级伸缩油缸等各种大型油缸。其中宝钢脱锭缸经现场使用，性能指标优于日本同类进口设备，受到用户好评。

中南光学仪器厂热忱欢迎国内外朋友光临，发展友谊和合作，我们将竭诚为您服务。

BaF_2晶体检测方法

BaF_2晶体具有相对研磨硬度低、脆性大反化学稳定性差等特点，为避免接触式测量对晶体表面质量的影响，我们均选用非接触式测量。下面我把晶体检测方法给各位先生作一简介。

一、晶体检测仪器及方法

1. 几何尺寸（大端面、对接面及长度）

在德国产TLF 1200/1型刻长度机上，采用两次对线直接测量，如图一、二所示。

2. 垂直度（两侧面间、对接面与侧面、大端面与侧面）

在国产JB1测角仪上，采用比较法测量，如图三所示。

3. 角度 92.25°±3′

在国产光学分度头上，直接测量，如图四所示。

4. 三基面平面度

在英国产N230型泰曼干涉仪上，利用双光束干涉原理测量，如图五所示。

5. 两端面平行度

在国产光学分度头上，直接测量，如图六所示。

6. 表面粗糙度Ra（两端面、四侧面）

在苏联产MNN-4型干涉显微镜上，利用双光束干涉原理直接测量，如图七所示。

二、遗留问题

1. 表面粗糙度测量仪器，工厂暂无此仪器，准备立即购置。

2. 美方所需的晶体检查报告应提供哪些参数。

BaF2 晶体检测方法示意图

序号	检测项目		技术要求	检测仪器	测量精度	检测方法
1	对接面尺寸	B1	41.03-0.30	长分度机 型号TLF1200/1 （德国制造）	0.001	见图一
	（mm）	B2	41.82-0.30			
		B3	41.09-0.30			
		B4	41.82-0.30			
2	大端面尺寸	C1	50.84-0.30			
	（mm）	C2	51.82-0.30			
		C3	50.92-0.30			
		C4	51.82-0.30			
3	晶体长度(mm)		250.00±0.30	"	"	见图二
4	两侧面间垂直度(mm)		0.04	JB1测角仪	30″	见图三
5	对接面与侧面垂直度(mm)		0.03			
6	大端面与侧面垂直度(mm)		0.02			
7	角度		92.25° ±3′	光学分度头	"	见图四
8	三基面平面度(mm)	A	0.01	N230泰曼干涉仪 （英国制造）	λ/20	见图五
		B	0.01			
		C	0.01			
9	两端面平行度(mm)		0.02	光学分度头	30″	见图六
10	对接面处倒角		0.4x45°	25 倍率计	0.05	（图略）
11	非对接面处倒角		0.6x45°			
12	两端面表面粗糙度 Ra		0.01 μm	MNN-4型干涉显微镜 （苏联制造）	0.001	见图七
13	四侧面表面粗糙度 Ra		0.02 μm			
14	对接后晶体总长度(mm)		500.00±0.30	长分度机（德国制造）	0.001	见图二

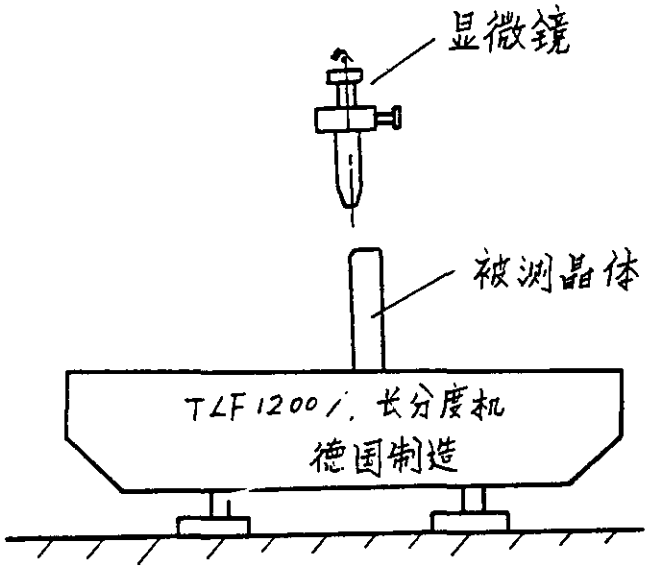
显微镜
被测晶体
TLF 1200/, 长分度机
德国制造

图一、

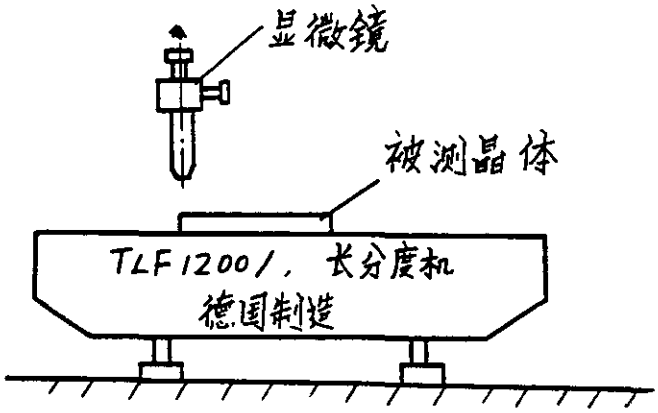
显微镜
被测晶体
TLF 1200/, 长分度机
德国制造

图二、

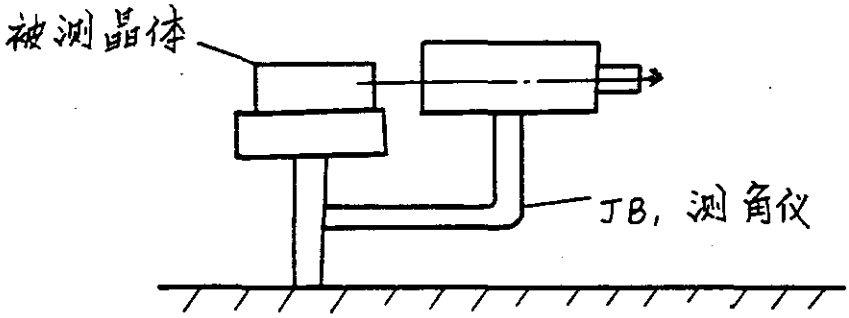
被测晶体
JB, 测角仪

图三

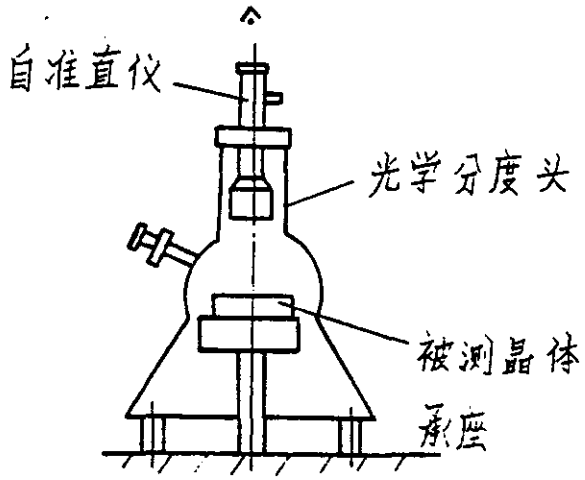

图四.

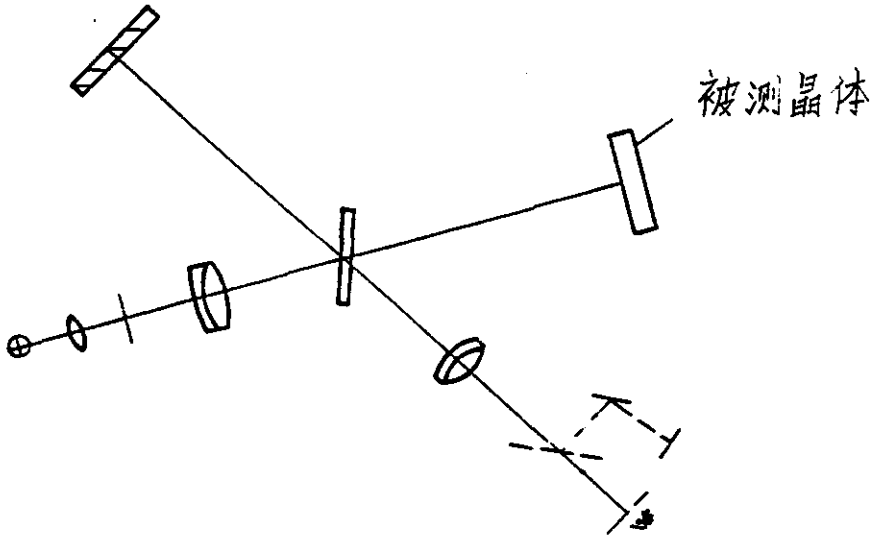

图五．泰曼干涉仪光学系统图

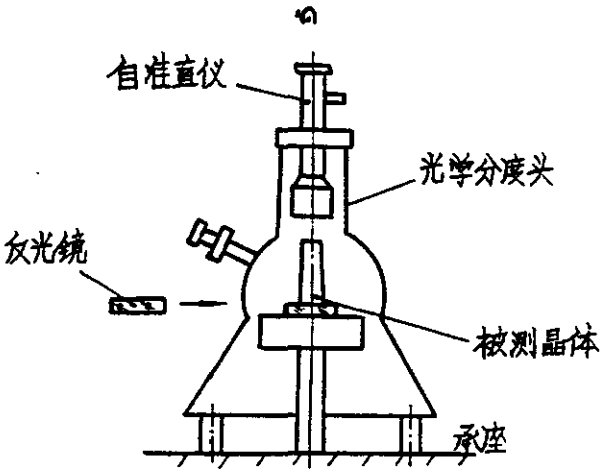

图 六

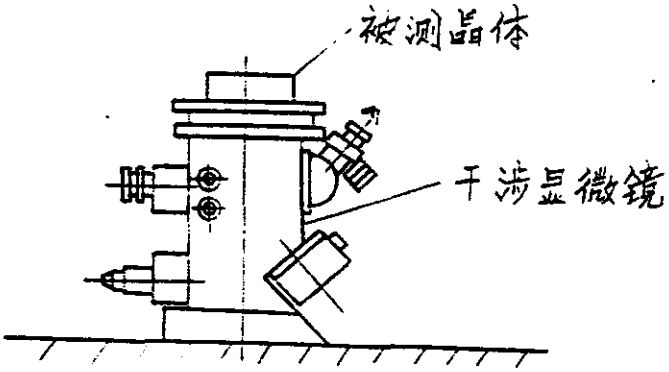

图七.