GEM TN-92-162

SIGEM Geant SImulation for GEM Detector

Yu. Fisyak, K. McFarlane, L. Roberts
SSC Laboratory

August 24, 1992

Abstract:

The present status of the full GEM simulation program is described. The program is based on GEANT 3.15 and closely follows the style of GEANT. Features include "hits" in all subdetectors. A description is given of the program structure, the materials used, and the convention for rotation matrices, followed by a summary of data cards. The main GEM geometrical volumes are shown, using the Baseline 1 design. The procedure for forming "hits" is described as well as the convention for saving and retrieving data. Instructions (scripts or command files) are given for installation and running on VAX/VMS, HP-UX, Sun, DEC-Ultrix and SGI. Results based on a preliminary analysis of 10 bunch crossing of minimum bias events passed through SIGEM are discussed.

GEM TN-162

September 21, 1992

Yu. Fisyak, K. McFarlane, L.Roberts

SIGEM
GEANT SImulation for GEM detector
(Status report)

The present status of the full GEM simulation program, SIGEM, is described. The program is based on GEANT 3.15 and closely follows the style of GEANT. Features include "hits" in all subdetectors. A description is given of the program structure, the materials used, and the convention for rotation matrices, followed by a summary of the data cards. The main GEM geometrical volumes are shown, using the Baseline 1 design. The procedure for forming "hits" is described as well as the convention for saving and retrieving data. Instructions (scripts or command files) are given for installation and running on VAX/VMS, HP-UX, Sun, DEC-Ultrix and SGI. Results based on a preliminary analysis of 10 bunch crossing of minimum bias events passed through SIGEM are discussed.

Contents

1 Program structure — flow diagram 1
2 Geometry 4
3 Hits and digitization 29
3.1 Hits 29
3.2 Digitization 33
4 File organization and running instruction 33
4.1 File Organization 33
4.2 Running Instructions 33
4.3 FFREAD data card and switches 42
5 Conclusion 47

Bibliography 48

List of Figures

1 The GEM geometry structure in SIGEM 5
2 X-cut of GEM setup with one 100 GeV muon 7
3 Bunch crossing of minimum bias events in GEM. Three primary interaction per bunch crossing with total number of particles equals to 34. 8
4 Silicon tracker (SVTX) without outer gas enclosure. 9
5 Silicon tracker (SVTX) without cables. 10
6 Silicon detector support structure without cables and support cylinders. 11
7 Barrel part of silicon tracker (SVTB). 12
8 Interpolating pad chamber detector (PADX). 13
9 Barrel part of IPC detector. 14
10 Bunch crossing of minimum bias events in GEM 15
11 Bunch crossing of minimum bias events in GEM 16
12 The elementary ϕ-cell for barrel liquid Krypton accordion calorimeter 17
13 Z-cut of the barrel liquid Krypton accordion calorimeter 18
14 Forward calorimeter with honeycomb structure 19
15 Electromagnetic part of the forward calorimeter. 20
16 Structure of Muon barrel (left side) 21
17 Muon barrel sector 22
18 Muon barrel chambers 23
19 Muon endcap structure 25
20 Muon endcap cathode strip chambers 26
21 The result of the radiation lengths estimation in the muon barrel chambers . . . 30
22 No. of radiation lengths after barrel accordion calorimeter 31
23 The scatter plot of X and Y in silicon barrel (upper histograms for both stereolayers) and endcaps (lower histograms) obtained for 10 bunch crossing of minimum bias events 34
24 The hit arrival time (ns) in silicon barrel detector obtained from 10 bunch crossing of minimum bias events 35
25 The scatter plot of X and Y in barrel Interpolating pad chambers obtained for 10 bunch crossing of minimum bias events 36
26 The scatter plot of R and Z in barrel Pressurized drift tubes obtained for 10 bunch crossing of minimum bias events 37
27 The scatter plot of R and Z in barrel Resistive plate chambers obtained for 10 bunch crossing of minimum bias events 38
28 The scatter plot of R and $|Z|$ in endcap Cathode strip chambers obtained for 10 bunch crossing of minimum bias events 39
29 The scatter plot for fluxes of positrons and electrons versus R and $|Z|$ (positive R corresponds to the flux via surface with R = constant, negative — via surface Z = contstant) obtained for 10 bunch crossing of minimum bias events 40

List of Tables

1 The list of pure material parameters used in SIGEM. A material density (ρ) of zero means that this material was used only for mixture preparation. 27
2 The list of mix ture material parameters used in SIGEM. The contents are referred to the indexes for pure materials. The minus sign means the volume fraction. 28
3 The list of mixture material parameters used in SIGEM. The minus sign means the volume fraction. 29

Introduction

The full detector simulation is intended to characterize the integrated performance of the detector as a whole, particular to answer the following questions:

- What are the occupancies in the different subsystems of the detector?
- What are the pile-up effects?
- What are the reconstruction efficiencies?
- What are the effects of magnetic field?
- What are the energy and momentum resolutions?
- What are the particle identification efficencies and what are the effects of misidentification?
- What is the effect of the dead material and cracks on performance?
- ...

In addition it has to form a base for parameterized simulation, for example, via creation of shower library.

The full detector simulation includes three stages:

- Creation of an adequate computer model of the detector including responses of all detector elements;
- Simulation of the detector data acquisition system — pipe-line — including effects of time overlap due to the limited time response of the detecting elements and the electronics;
- Event reconstruction in terms of basic concepts like isolated electron, γ, high p_T-jet, μ, etc, at the different levels of reconstruction starting from the level 1 trigger to full reconstruction (PASS1/2).

This note is devoted to the first of the above topics — the GEANT model of GEM. The first section describes the program for the full simulation of GEM (= SIGEM) based on GEANT 3.15 and includes the program flow diagram. The second section is devoted to the description of the geometry for the different subsystems of the detector. The basical volumes used are shown. In the next section the conception of hits and digitization which is proposed to use in the full simulation is presented. In the last section the file organization is described structure and the running instructions are given.

1 Program structure — flow diagram

The full GEM GEANT simulation program, SIGEM, was constructed on the base of GEANT 3.15 using as a guide the structure of the L3 simulation program. Much of the information for materials and geometries came from the GEM Baseline 1 documents[1]. In addition, codes were taken from the following sources:

- DXL — codes developed by W. Kinnison, D.M.Lee, M.Brooks, ... for Central Tracker;
- USER314 — codes developed by Lee Roberts.

The SIGEM program flow diagram is given below:

(*) means user code (not GEANT3 code)

```
S I G E M (*)   GEANT3-GEM Main Program (supported both interactive
 |                                                        and batch modes)
 |
 |->G Z E B R A      initialization of Zebra system
 |
 |->H L I M I T      initialization of HBOOK4
 |
 |->G I N T R I      Initialize Command Processor (KUIP)
 |   |
 |   |-> GUINTI(*)   User menu for interactive version
 |
 |->I G I N I T      initialization of HIGZ package
 |
 |->U G I N I T (*)  user initialization routine for GEANT3-GEM
 |   |               simulation
 |   |
 |   |->GINIT            GEANT initialization routine
 |   |->SIDATA (*)       defines Simulation specific user data cards
 |   |   |               data cards for:
 |   |   |->SILUND (*)       LUND
 |   |   |->SIDATT (*)       Tracker
 |   |   |->SIDATM (*)       Muon system
 |   |   |->SIDATC (*)       Calorimeter
 |   |   |->JTSDAT (*)       Trigger
 |   |   |->SIDATU (*)       User specific
 |   |
 |   |->UTDATA (*)       reads GEANT standard and user data cards
 |   |   |
 |   |   |->GFFGO            reads GEANT standard data cards
 |   |
 |   |->SIVERS (*)       identifies current SIGEM version
 |   |
 |   |       Creation of initialization data structures considered  :
 |   |
 |   |->UGEOM (*)
 |   |   | ->UTGEOM (*)       interprets data card GEOM
 |   |   | ->XSGEM  (*)       creates GEM geometrical setup
 |   |     |
 |   |     |->XSMATI (*)       initialization of material indices
 |   |     |->XSROTI (*)       initialization of general rotation
 |   |     |                   matrix indices
 |   |     |->GSVOLU/GSPOS     creates mother volume GEM and PIPE, TRAK,
 |   |     |                   CALO, MUON and FFSH, MAGN
 |   |     |->XSTRAK (*)       TRAcKer
 |   |     |->XSCALO (*)       creates volumes in CALOrimeter,
 |   |     |->XSMUON (*)       MUON system
 |   |     |  ...... (*)       ....
 |   |   | ->GGCLOS
 |   |
 |   |->SIJSET (*)       initialization of JSET data structure
 |   |    |
 |   |    |-> SITSET           for central Tracking
 |   |    |-> SICSET           for Calorimeters
 |   |    |-> SIMSET           for Muon system
 |   |
 |   |->GHCLOS
```

```
|   |->UTPART (*)      creates GEM standard particle data structure
|   |                  JPART (calls GPART)
|   |->GPHYSI          preparation of cross section and energy loss
|   |                  tables for all used materials
|   |->UTSATT (*)      sets Volume attributes for sensitive detectors
|   |->GHEINI          initialization of GHEISHA routines
|   |->GBHSTA          books GEANT standard histograms or read existing
|   |                  histograms to continue the run
|   |->TZINIT          reading titles for magnetic field
|   |->SIUINI (*)      user initialization routine
|   |
|->G D I N I T         initialization of GEANT3 drawing package
|
|->Q N E X T E      loops over events
| (G R U N)
|   |
|   |->TIMEX            gets time left after initialization
|   |
|   |<-------------------------------------------------------------
|   |                                                              |
|   |->GTRIGI           initialization for event processing        |
|   |->GTRIG (*)        event processing                           |
|   |   |                                                          |
|   |   |->GFIN         reading events (if any, IOPA card "GET")   |
|   |   |->GUKINE (*)       generates or reads event input kinematics |
|   |   |   |                                                      |
|   |   |   |->SIKIN1 (*)   single particle event (def.=100GeV/c muon)|
|   |   | or|->SIKIN2 (*)   multi-pion event                       |
|   |   |   |->SIKIN9 (*)   user entry for kinematics
|   |   |   |->GLUNDI (*)   initialization of LUND Monte Carlo
|   |   |   |->GLUND  (*)   LUND event                             l
|   |   |                   (see data card KINE)                   o
|   |   |                                                          o
|   |   |->GUTREV (*)       controls tracking of a complete event  p
|   |   |   |
|   |   |   |->GTREVE
|   |   |   |   |-> store initial tracks in stack
|   |   |   |   |                    (-> GFKINE,GSSTAK,GUSKIP)     o
|   |   |   |   ( loop over tracks )                               v
|   |   |   |   |->GLTRAC   prepare commons for tracking           e
|   |   |   |   |     | ->GMEDIA          finds current volume     r
|   |   |   |   |
|   |   |   |   |->GUTRAK (*)       calls GTRACK
|   |   |   |      |
|   |   |   |      |->GTRACK            controls tracking of current  e
|   |   |   |          |                 track                        v
|   |   |   |          |                                              e
|   |   |   |          |   GTGAMA                                     n
|   |   |   |          |   GTELEC          extrapolation of particle  t
|   |   |   |          |or GTNEUT                                     s
|   |   |   |          |-> GTHADR          track  by  one  step
|   |   |   |          |   GTMUON                                     |
|   |   |   |          |   GTNINO                                     |
|   |   |   |          |                                              |
|   |   |   |          |->GUSTEP(*)        special operations at the  |
|   |   |   |          |   |               end of each step           |
|   |   |   |          |   |-> GDEBUG                                 |
|   |   |   |          |   |    |                                     |
```

```
|   |   |   |          |   |    |->GDCXYZ  on-line drawing of          |
|   |   |   |          |   |    |          coordinates                 |
|   |   |   |          |   |    |->GPCXYZ  prints details of           |
|   |   |   |          |   |    |          current step                |
|   |   |   |          |   |    |->GSXYZ   stores space point          |
|   |   |   |          |   |               coordinates                 |
|   |   |   |          |   |               (see data card SWIT)        |
|   |   |   |          |   |   SICHIT (*)      stores hits             |
|   |   |   |          |   |or ...... (*)                              |
|   |   |   |          |   |-> ...... (*)      for current detector    |
|   |   |   |          |       SITHIT (*)                              |
|   |   |   |          |->GTMEDI           finds current volume        |
|   |   |->GUDIGI (*)       fan-out routine for digitization          |
|   |   |   |   SICDIG (*)      digitization                          |
|   |   |   |or ...... (*)                                              |
|   |   |   |-> ...... (*)      for current detector                  |
|   |   |       SITDIG (*)                                              |
|   |   |       JTSIMU (*)      level 1 trigger                       |
|   |   |->GUOUT (*)        outputs current event an makes plots      |
|   |       |               if required (data card PLOT)              |
|   |       |->GFHSTA           fills GEANT standard histograms       |
|   |       |->JTSANA (*)       trigger data analysis                 |
|   |       |->SIUANA (*)       user event analysis                   |
|   |       |->create EVNT structure                                  |
|   |                                                                 |
|   |->GTRIGC           clears memory for next event                  |
|   |                                                                 |
|   |->checks time left                                               |
|   |                                                                 |
|   |-----------------------------------------------------------------
|
|->U G L A S T (*)  termination routine
|   |
|   |->JTSEND(*)        summary of trigger analysis
|   |->GLAST            GEANT standard termination
|   |->IGEND            HIGZ end
|   |->SIUEND(*)        user termination
|   |->GSHSTA(*)        save histograms
|   |->HPDIR            prints histograms
|
stop
```

2 Geometry

The goal of SIGEM is to provide a detailed description of GEM down to the level of a "detector element" including "dead" structures. One essential point is to provide a reliable definition of the geometry including the possibility of misalignment.

The geometrical setup is defined inside the top-level mother volume "GEM ". This mother volume is divided into three major detector regions (TRAK, CALO and MUON) and several supply and support structures (QUAD, MAGN, FFSH, MEMB and PIPE). The geometry structure is presented in Fig.1. These volumes are designed to be non-overlapping to permit the substitution of other detector options, and are defined by polycones. The individual volumes are as follows:

- The TRAcK region is defined as a polycone between the beam pipe region (PIPE) and the eXternal part (XB) of the track system and includes the silicon vertex detector (SVTX) and the Interpolating pad chambers (PADX)

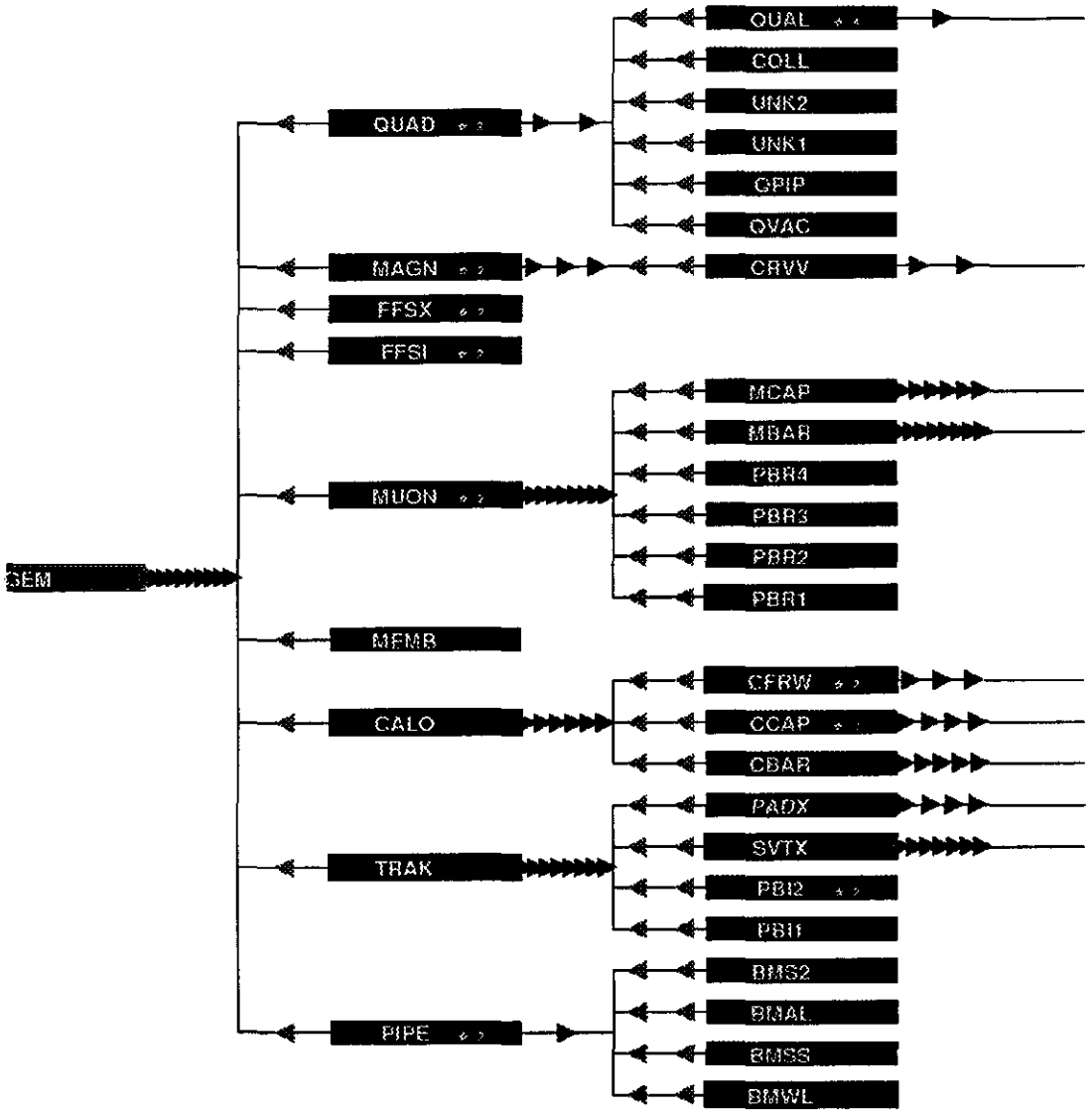

Figure 1: The GEM geometry structure in SIGEM

- The CALOrimeter region (BARrel, endCAP and FoRWard, each including electromagnetic and hadron sections) is the polycone between the external slot of the tracking system and the external radius of the calorimeter region.
- The MUON region is the region outside the calorimeters and includes the BARrel and endCAP muon chambers.
- The superconducting solenoid ("MAGN"), Forward Field SHapers, support MEMBrane and beam PIPE structure include all support elements.
- The quadrupole region ("QUAD") includes the beam quadrupoles, the collimator and the pumps.
- Each of these regions is defined in detail through the routines XSxxxx under user control at the time of execution through the data card GEOM. The description of the materials and tracking media is centralized in one routine XSMATM and some useful rotation matrices are defined through XSROTM (see section 4.3).

In fig.3 it is shown the overall geometrical GEM structure with one minimum bias SSC event which corresponds to 3 primary interactions with 34 secondary particles produced in these interactions (dotted lines correspond γ-quanta, dash-dotted lines — neutral particles, mainly neutrons). In this event it was two secondary interactions in the beam pipe just before and after the forward calorimeter.

In Fig.4-9 it is shown the structure and some basic elements of the GEM central tracking system. The same event as above is shown in fig.10.

In fig.11 it is presented the GEM calorimeter tower structure with the same minimum bias event as above. In fig.12 and 13 it is shown the simplified approach for description of the barrel liquid Krypton accordion calorimeter. In fig.14 and fig.15 it is presented the GEM forward calorimeter structure and the cut of the electromagnetic part of Forward calorimeter.

The muon barrel structure is presented in fig.16 and fig.17. The types of muon chambers used is shown in fig.18.

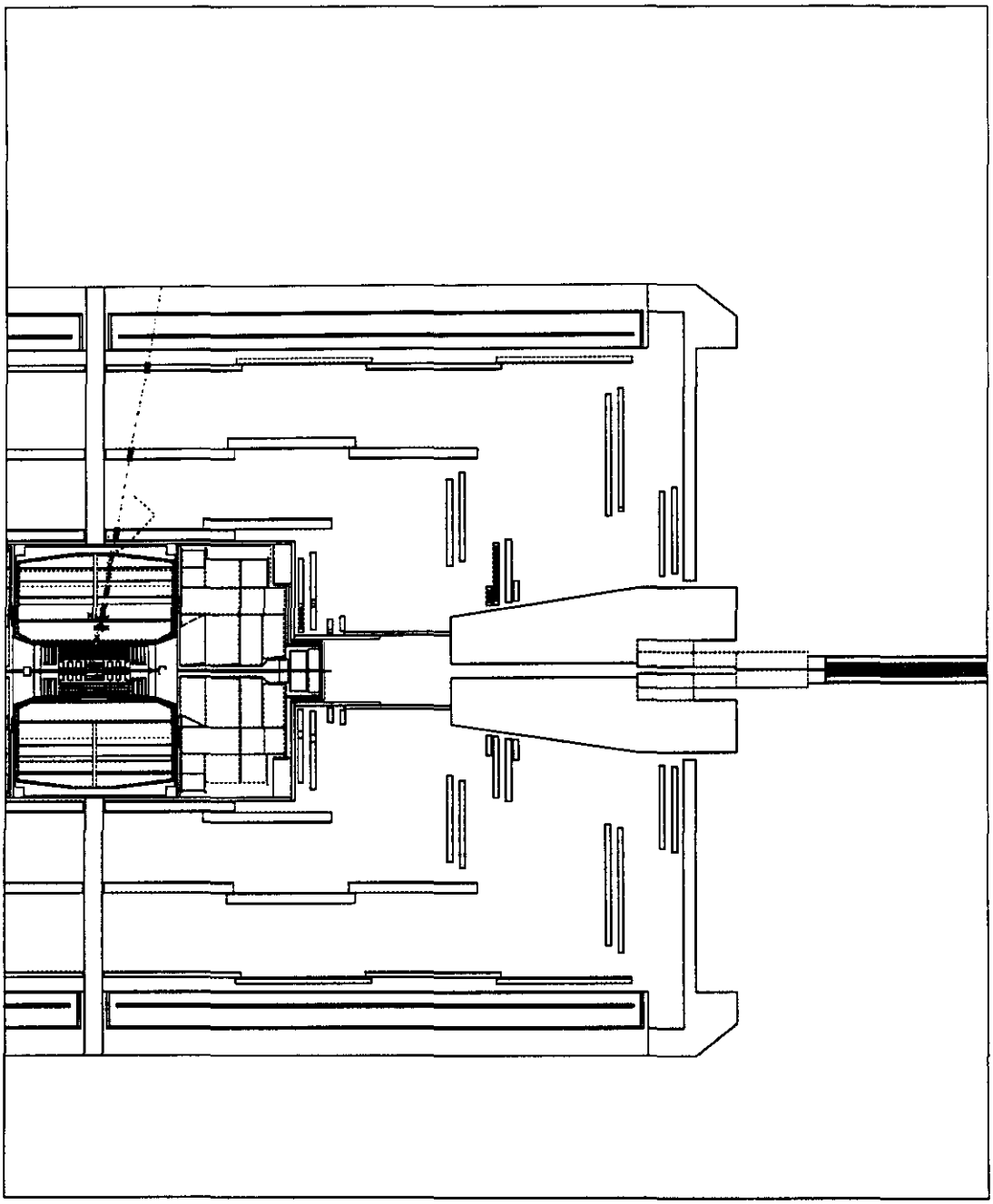

Figure 2: X-cut of GEM setup with one 100 GeV muon

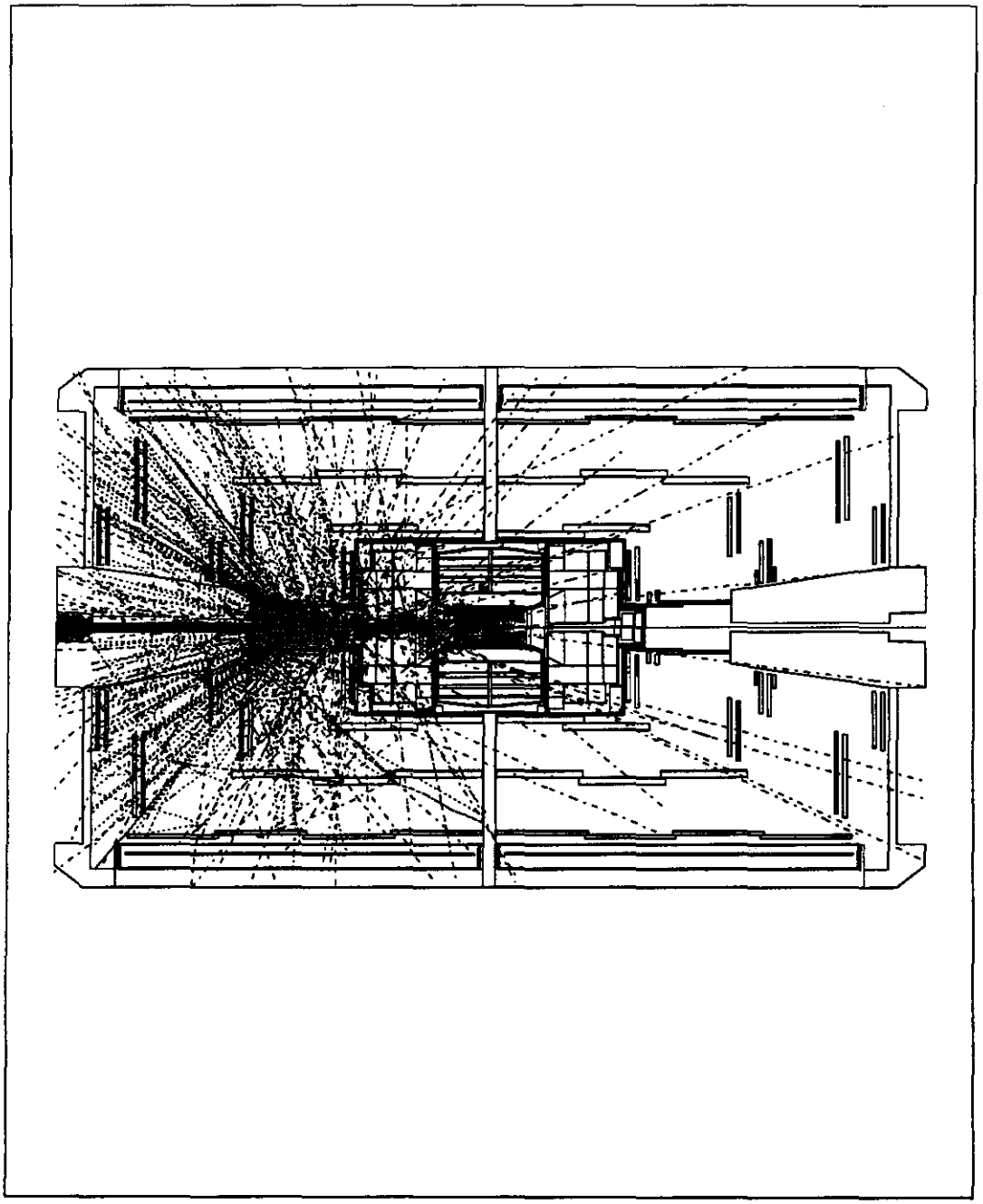

Figure 3: Bunch crossing of minimum bias events in GEM. Three primary interaction per bunch crossing with total number of particles equals to 34.

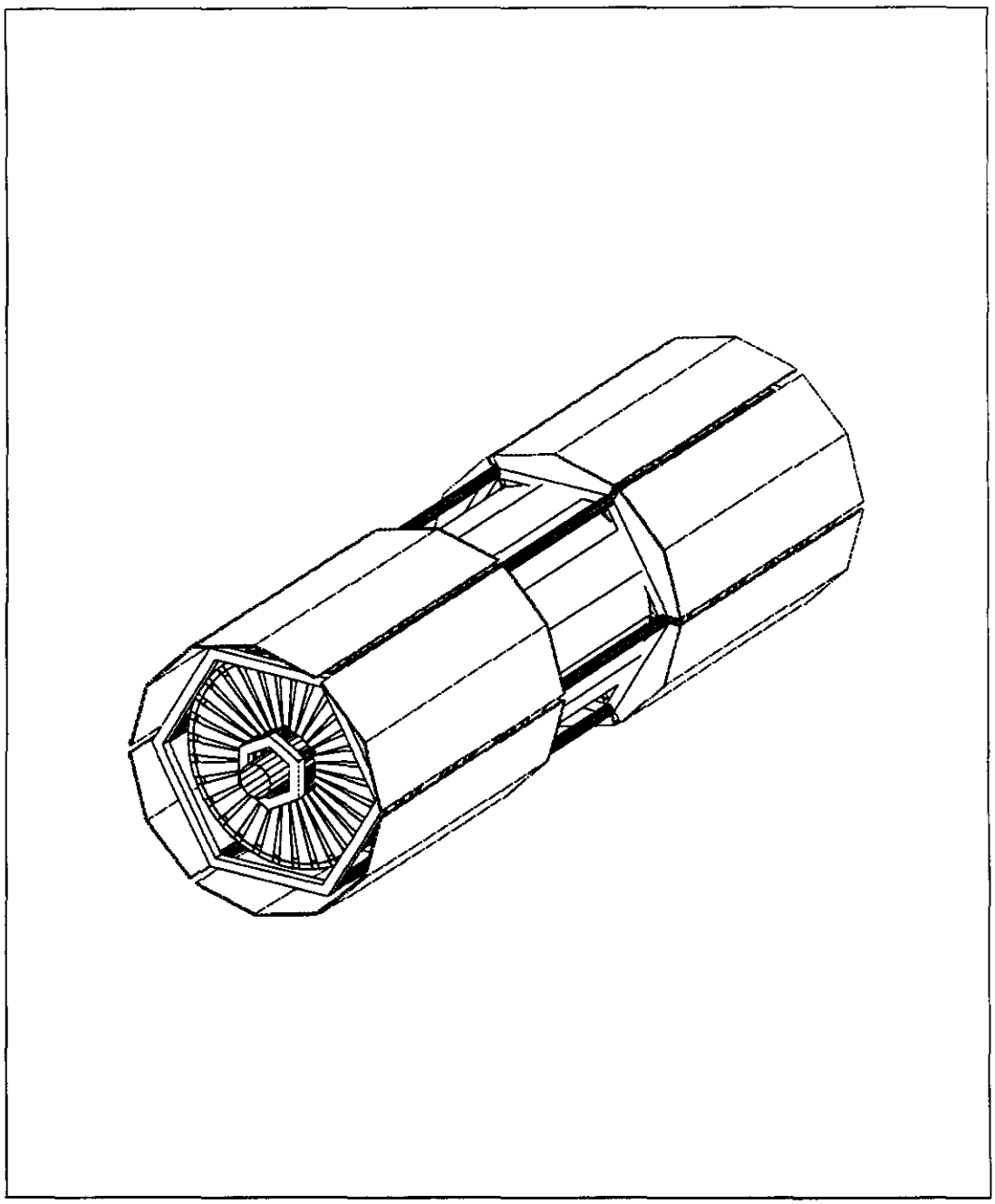

Figure 4: Silicon tracker (SVTX) without outer gas enclosure.

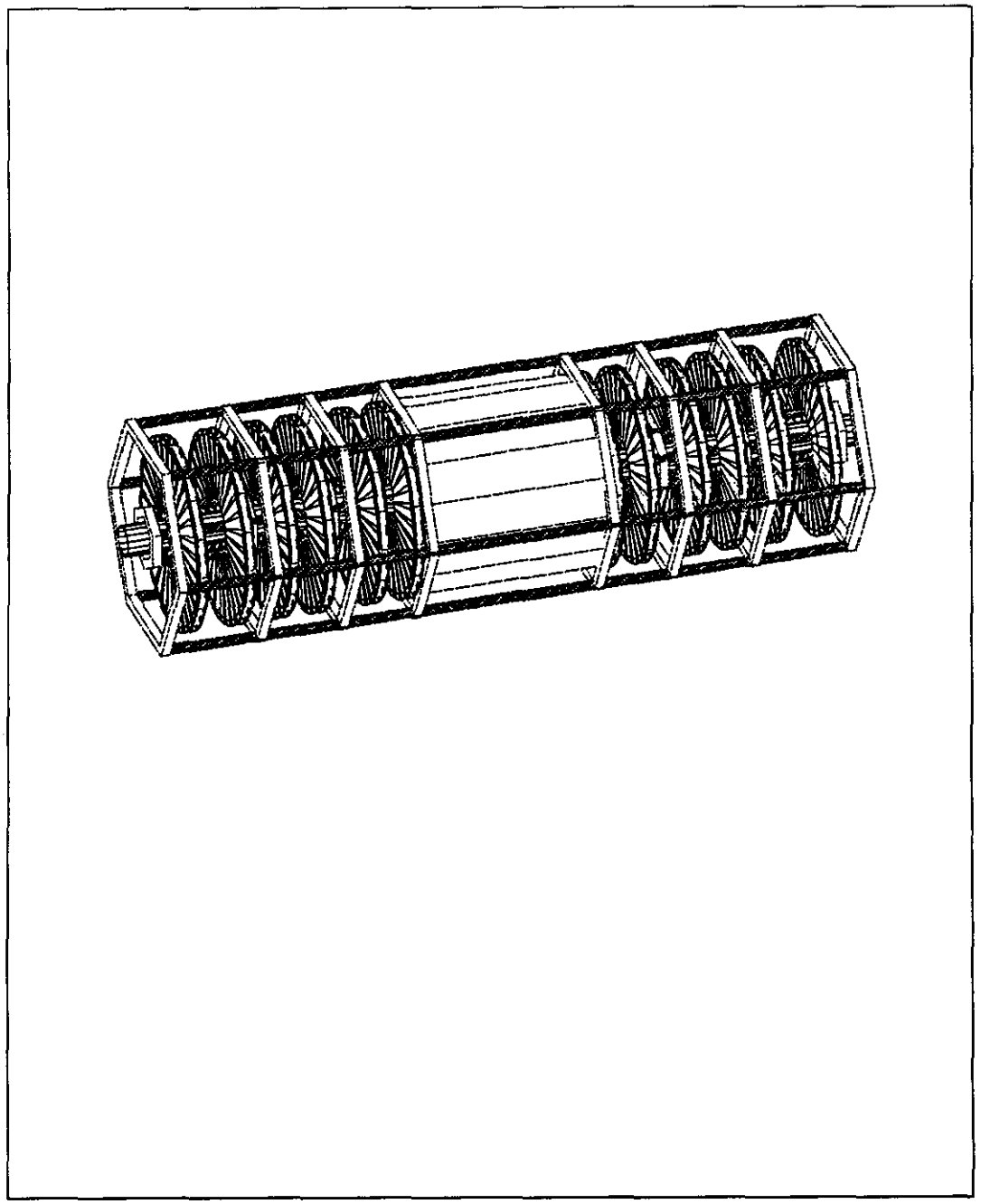

Figure 5: Silicon tracker (SVTX) without cables.

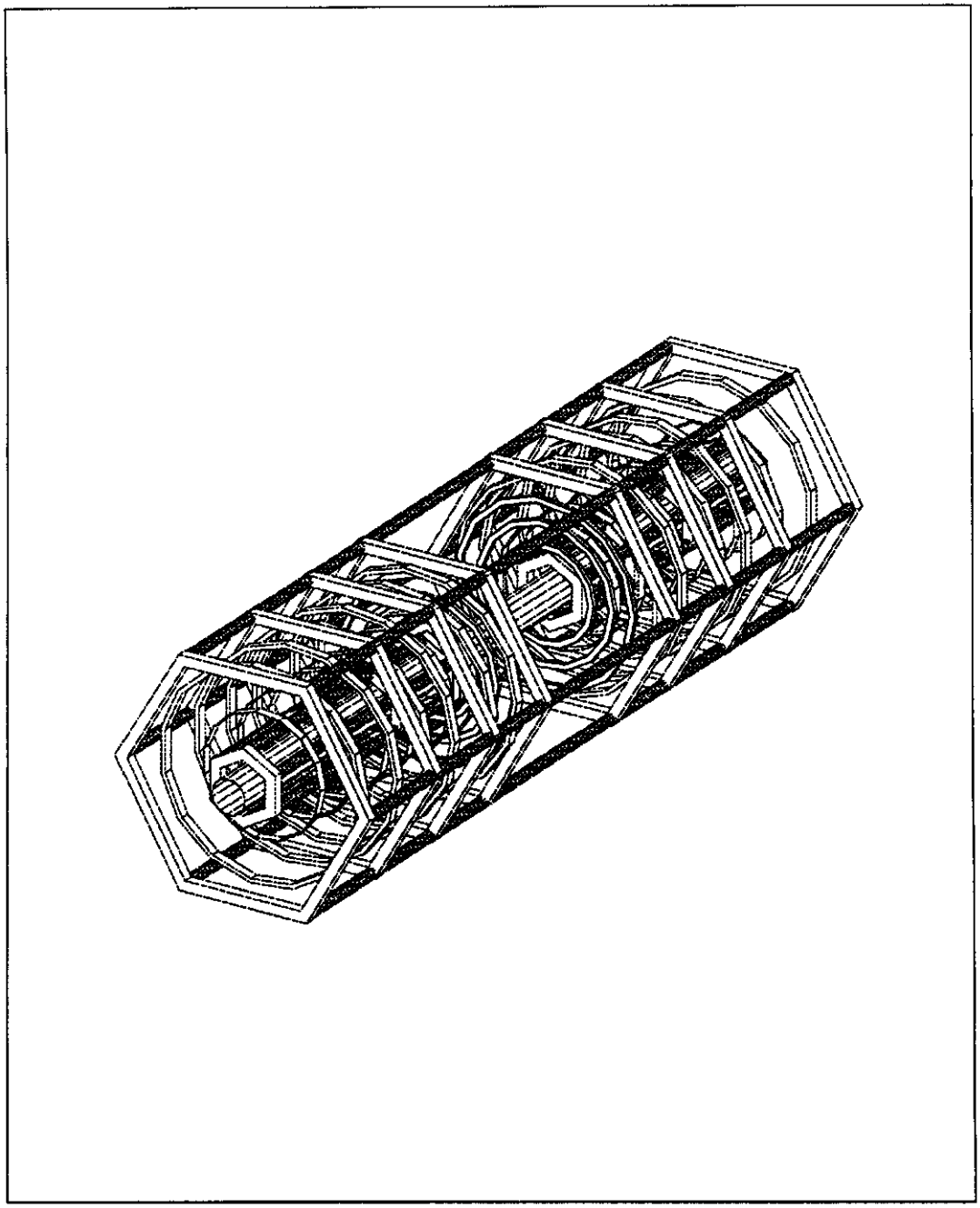

Figure 6: Silicon detector support structure without cables and support cylinders.

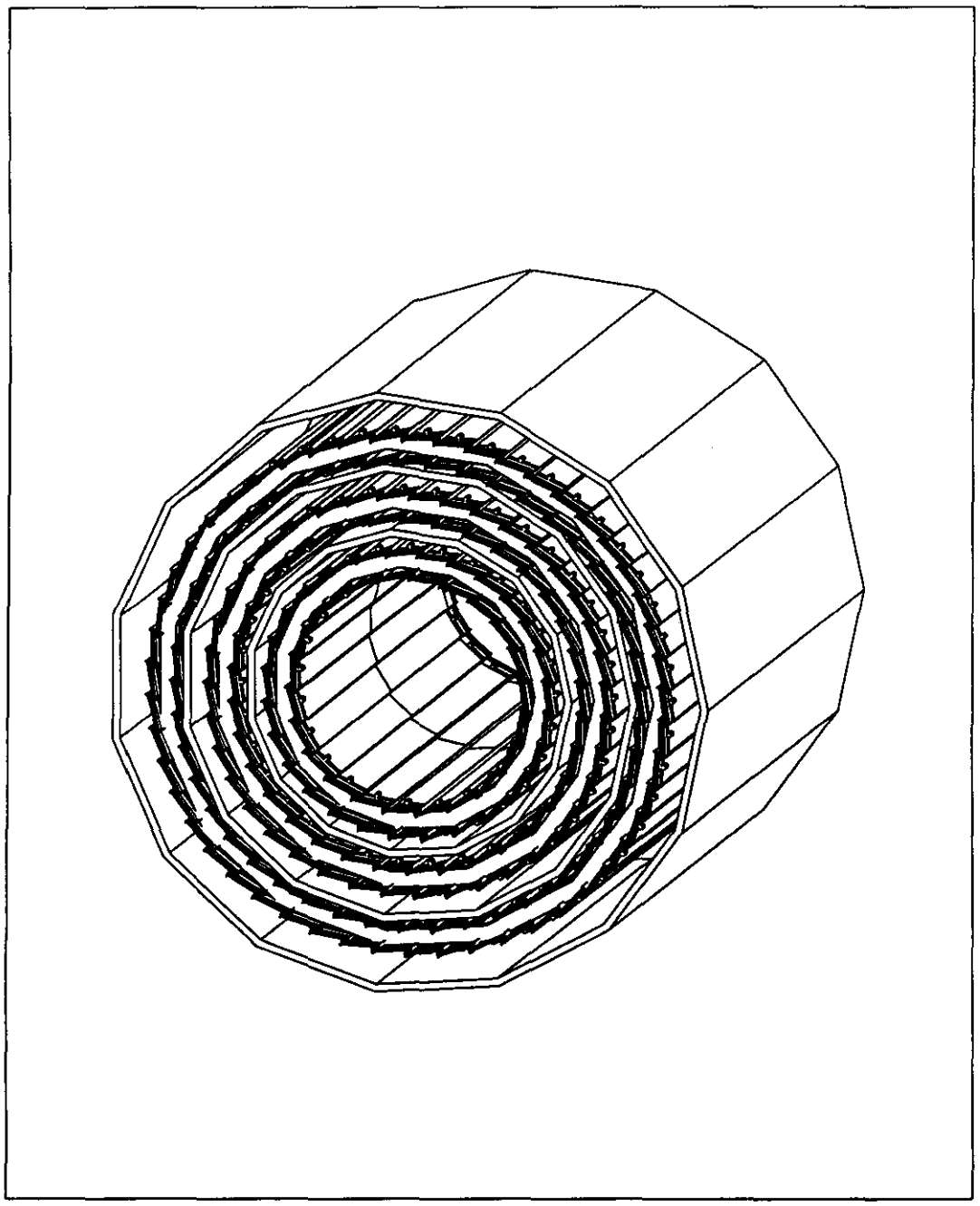

Figure 7: Barrel part of silicon tracker (SVTB).

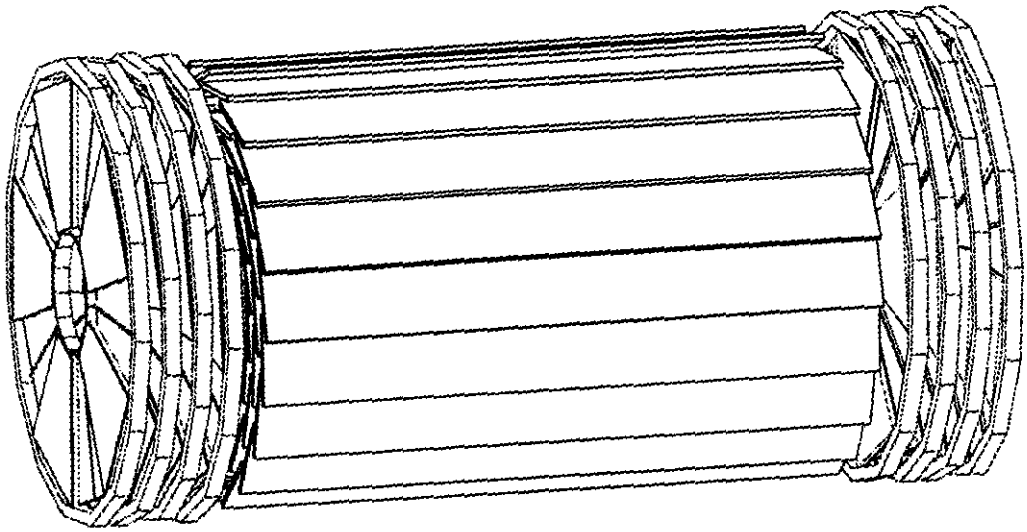

Figure 8: Interpolating pad chamber detector (PADX).

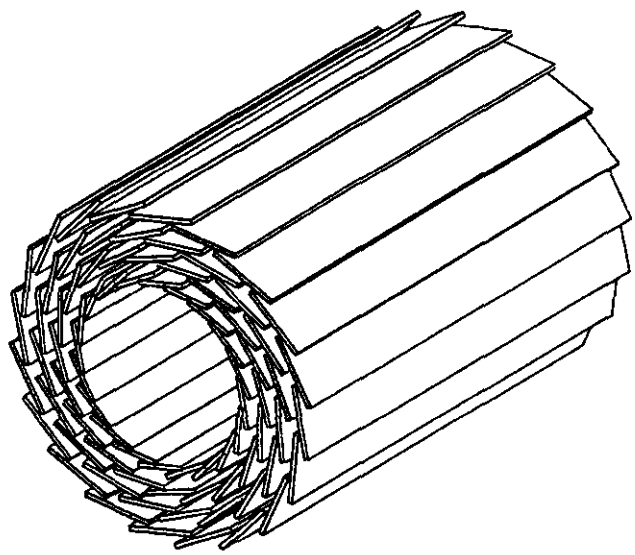

Figure 9: Barrel part of IPC detector.

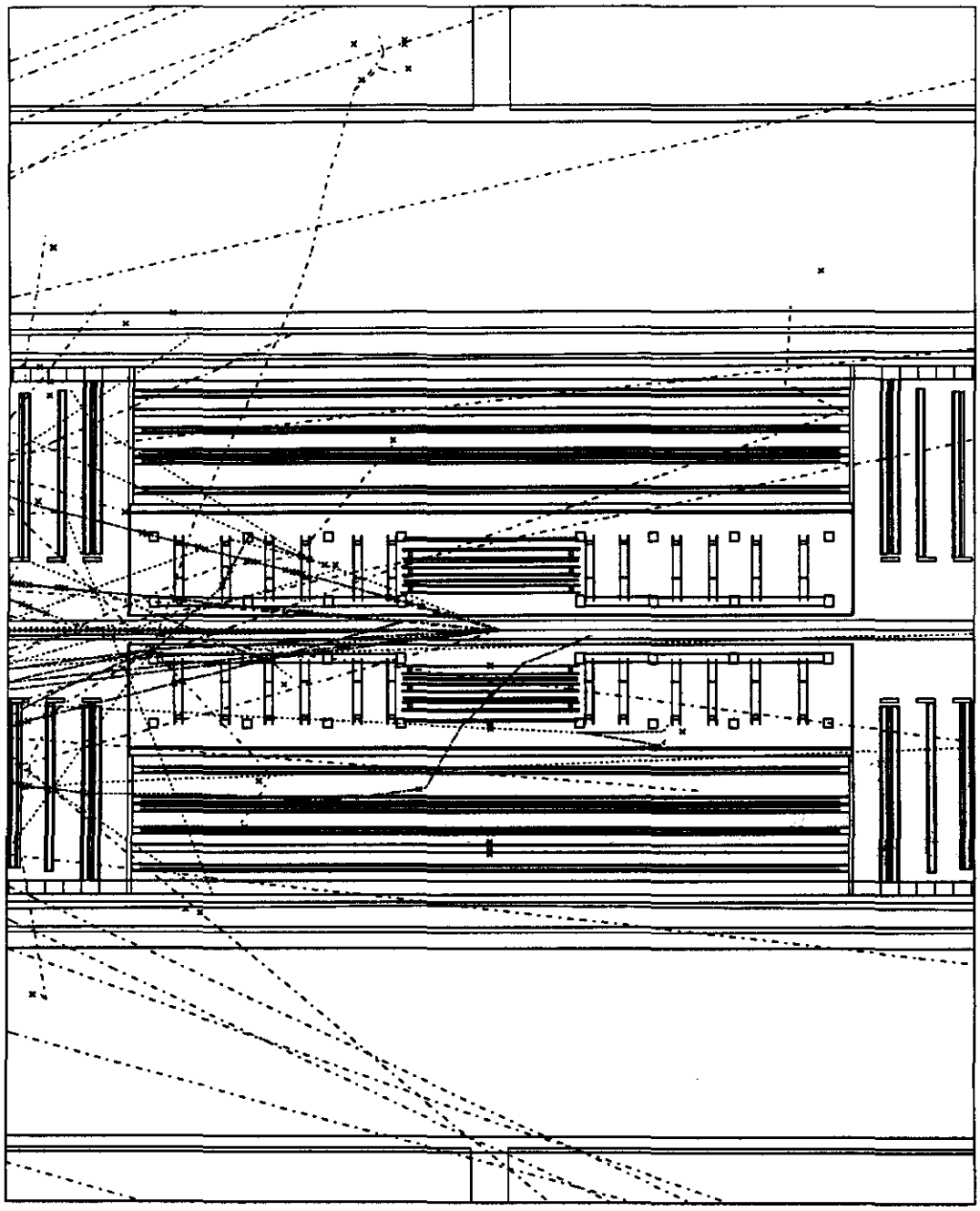

Figure 10: Bunch crossing of minimum bias events in GEM

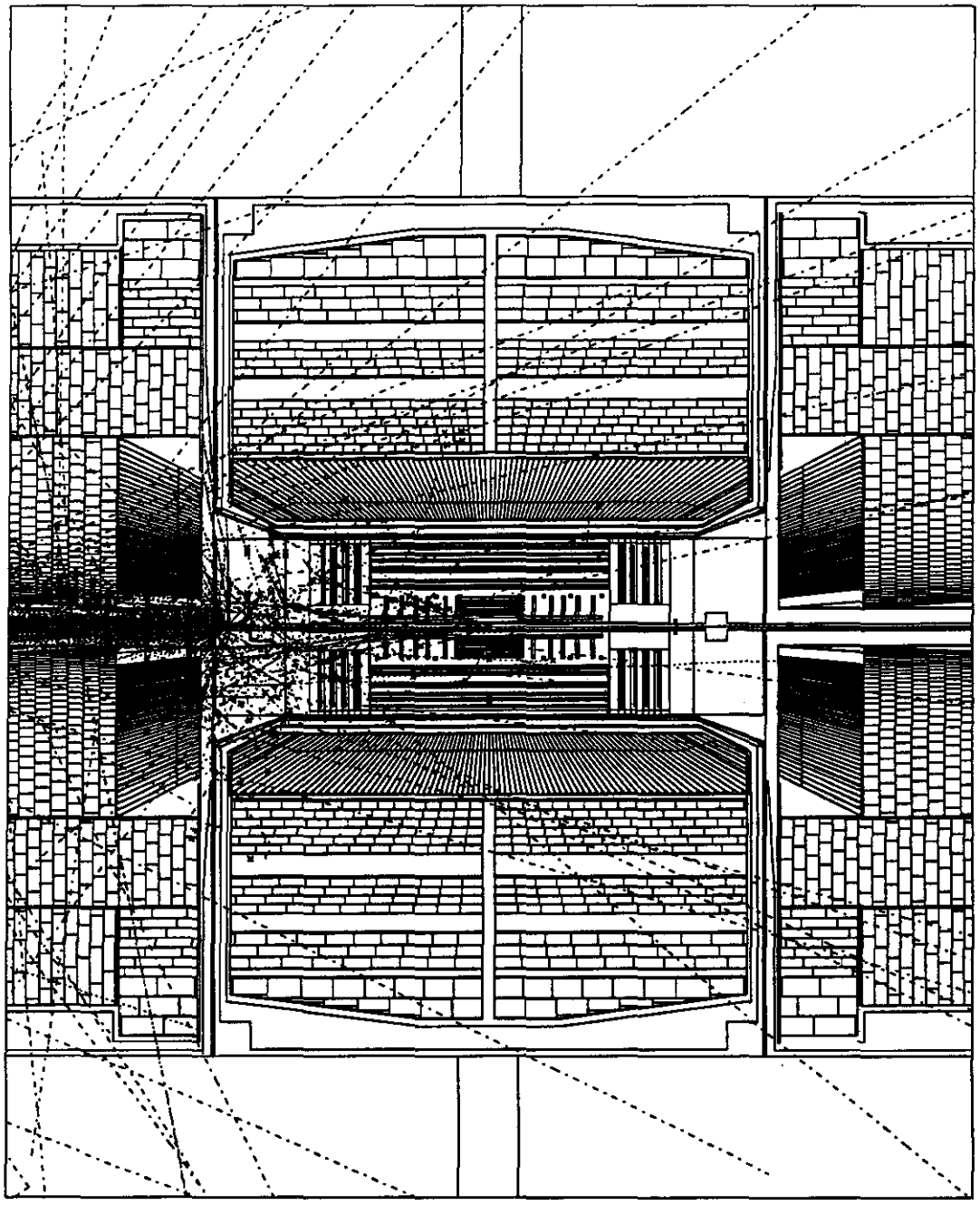

Figure 11: Bunch crossing of minimum bias events in GEM

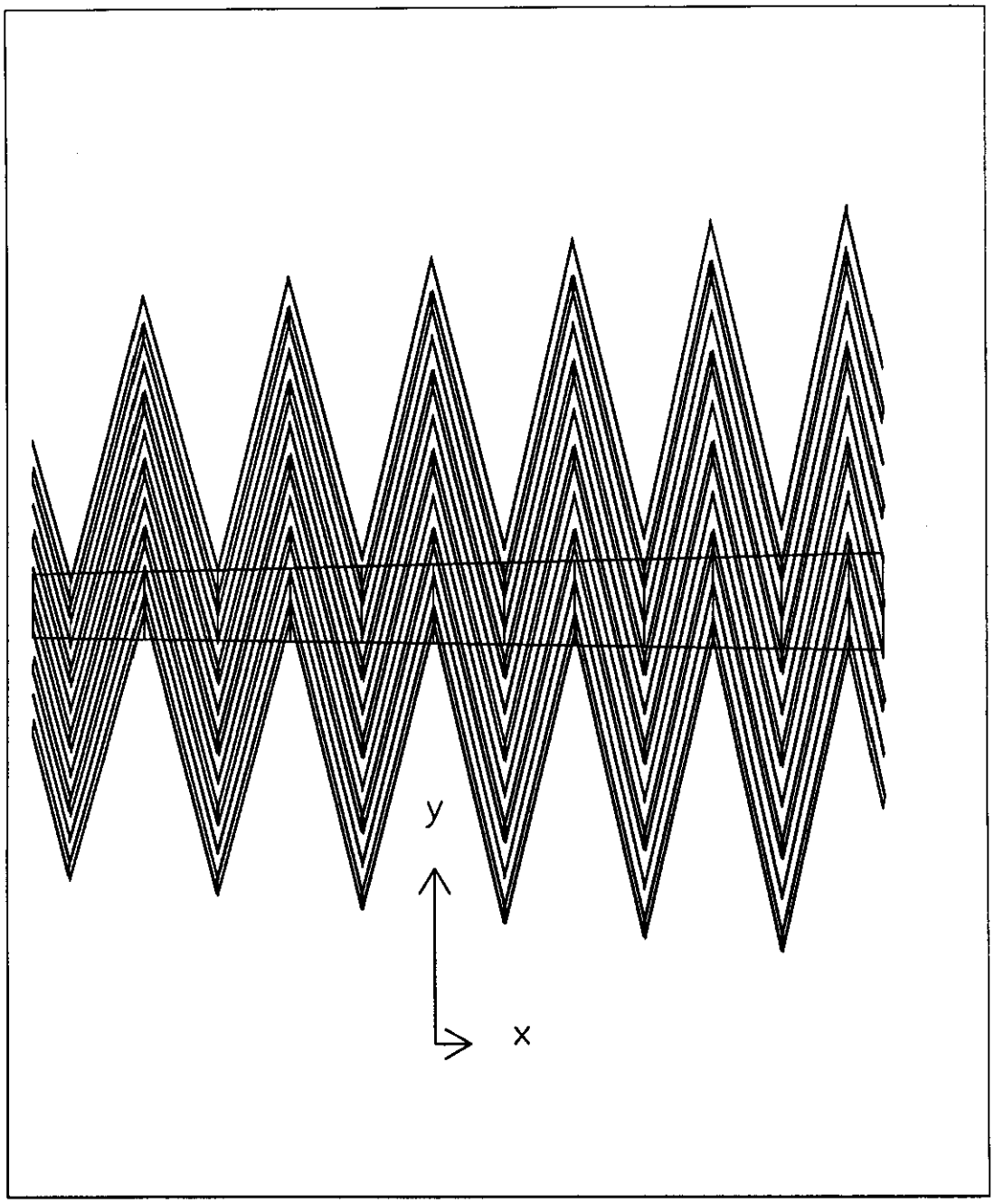

Figure 12: The elementary ϕ-cell for barrel liquid Krypton accordion calorimeter

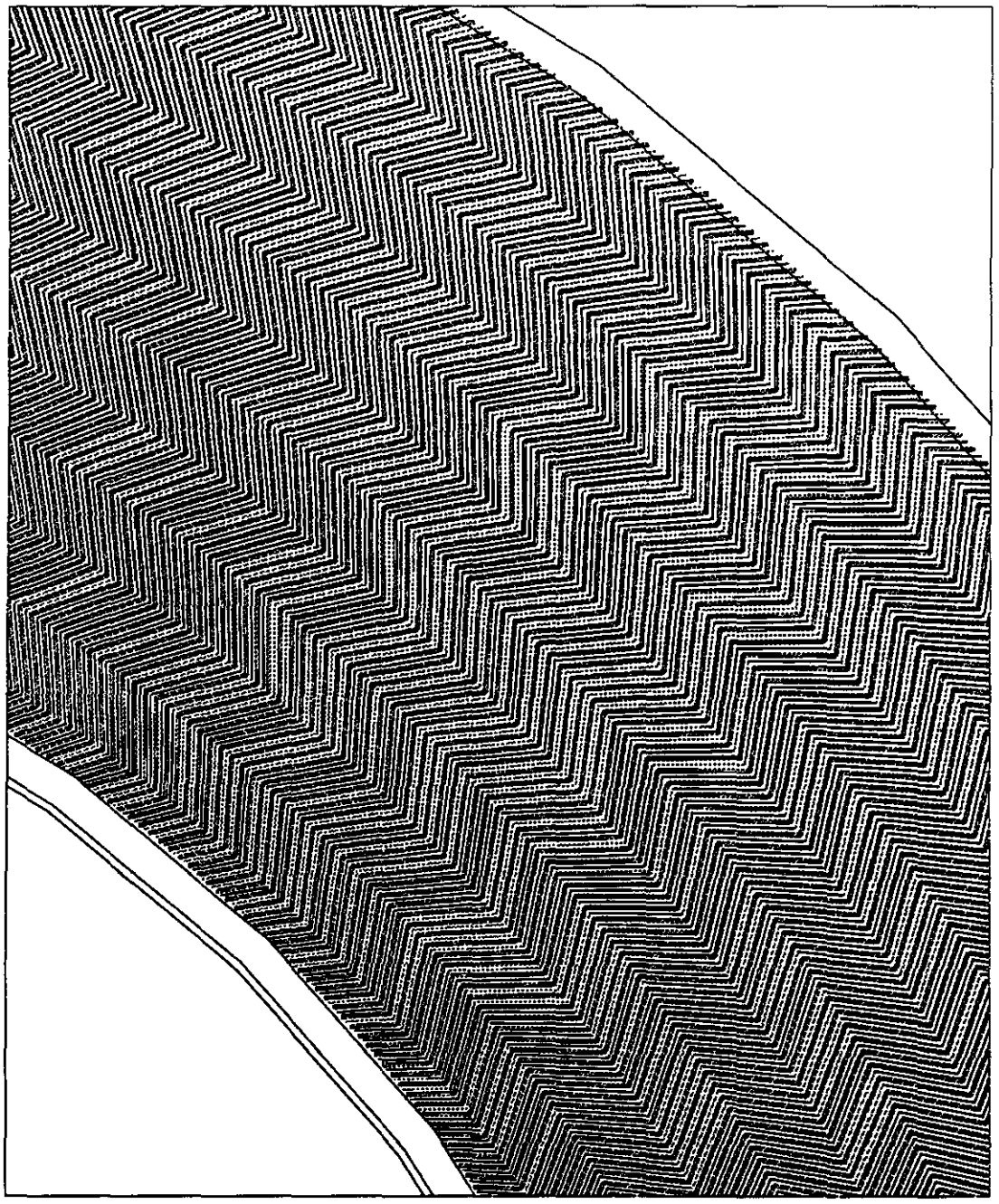

Figure 13: Z-cut of the barrel liquid Krypton accordion calorimeter

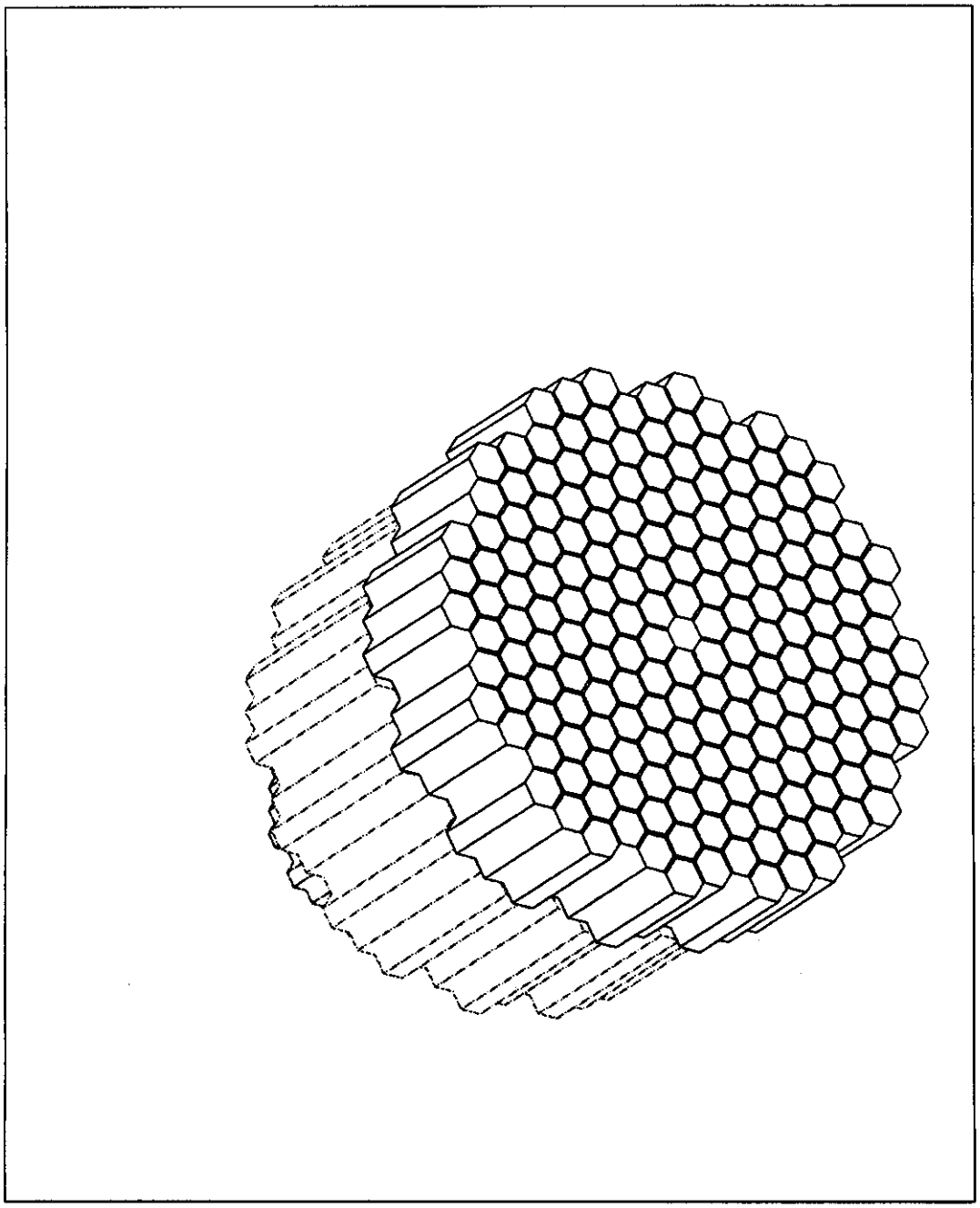

Figure 14: Forward calorimeter with honeycomb structure

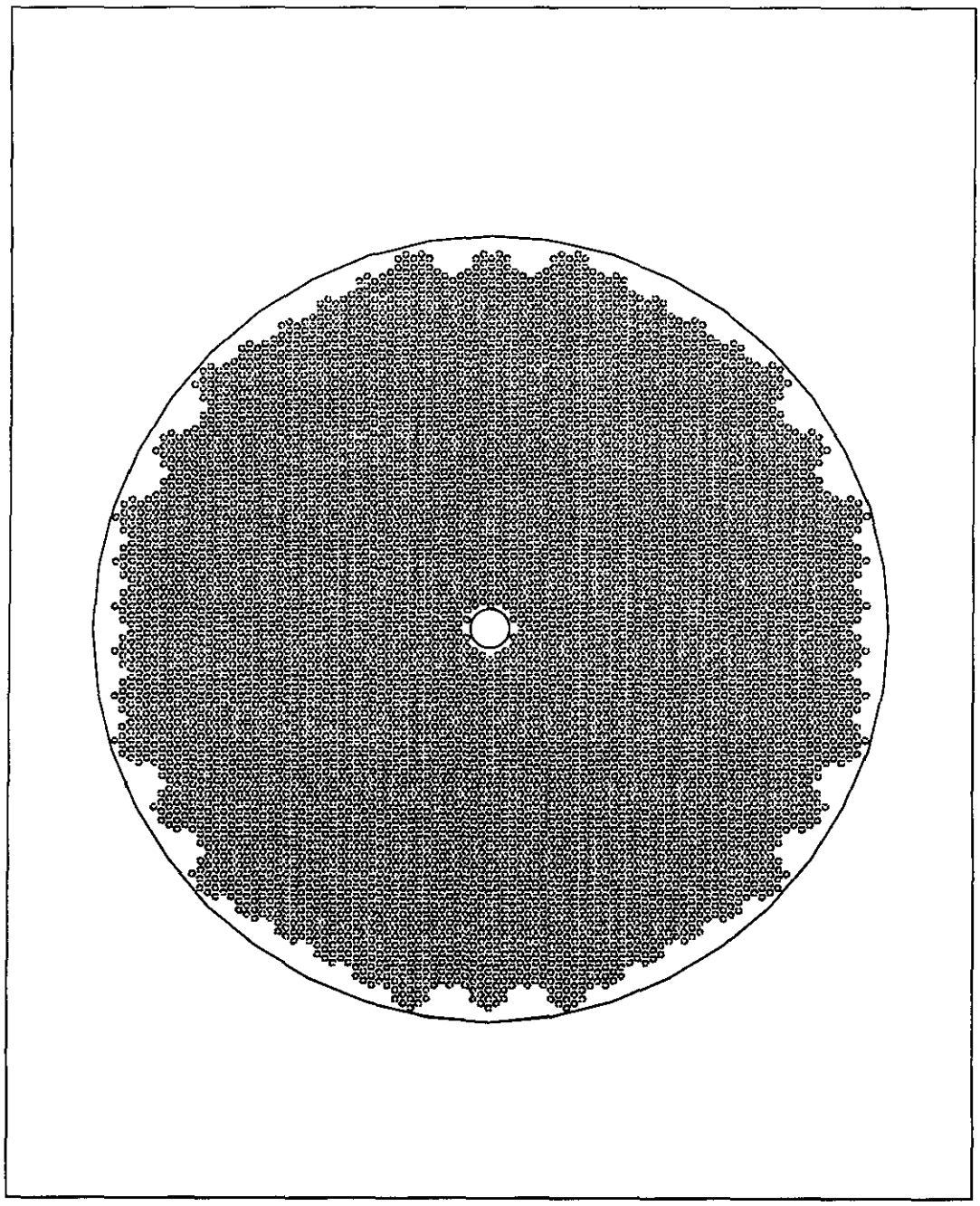

Figure 15: Electromagnetic part of the forward calorimeter.

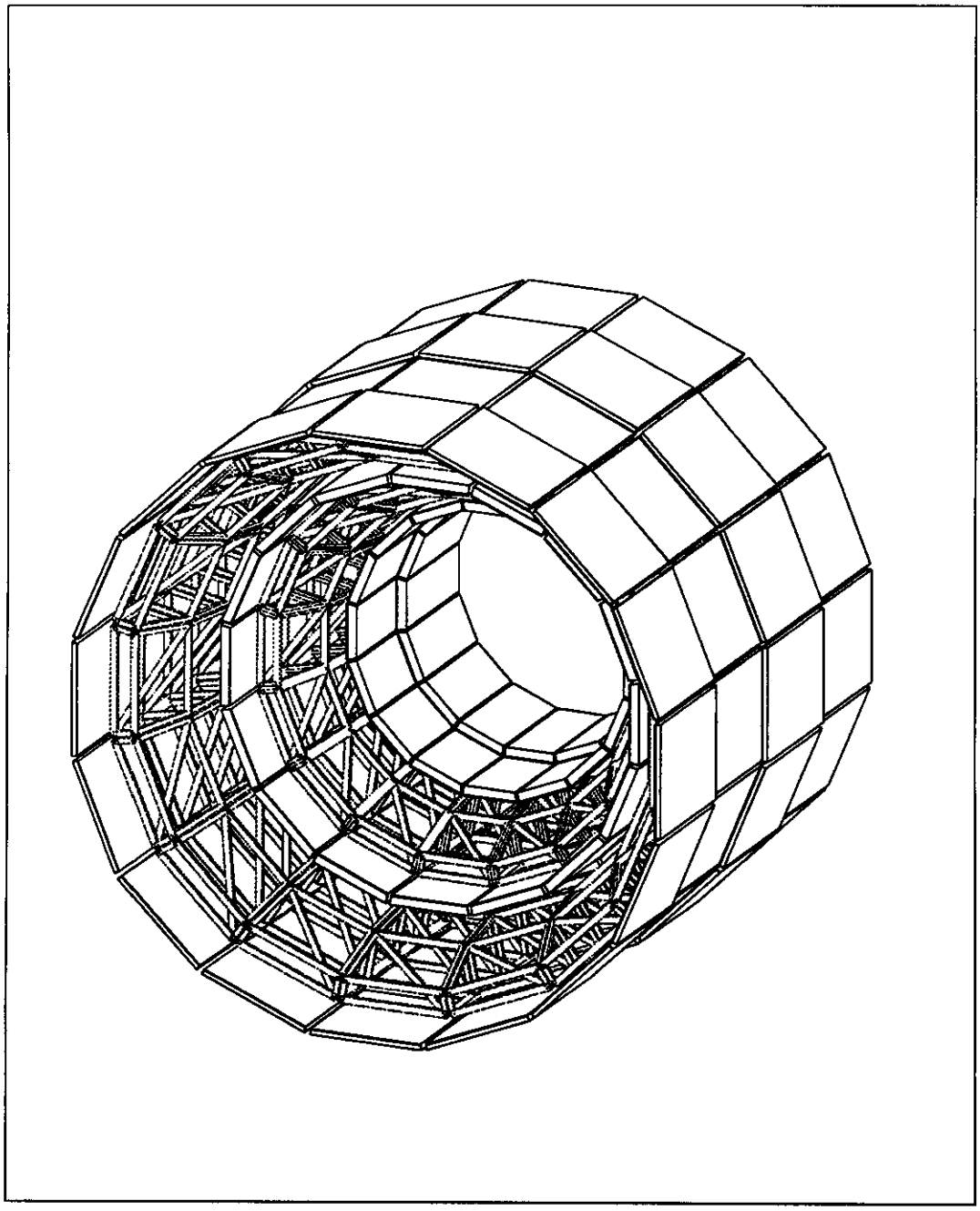

Figure 16: Structure of Muon barrel (left side)

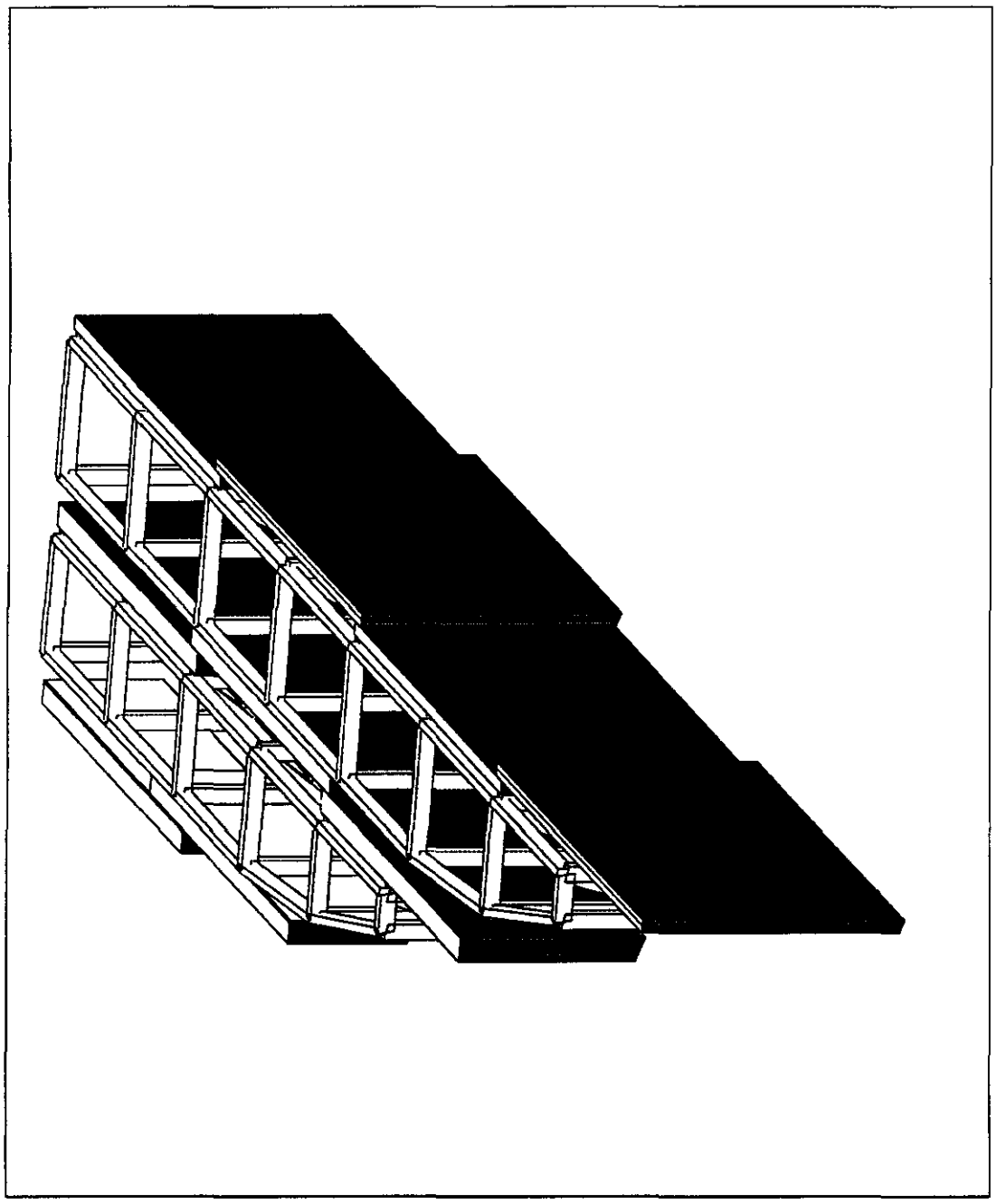

Figure 17: Muon barrel sector

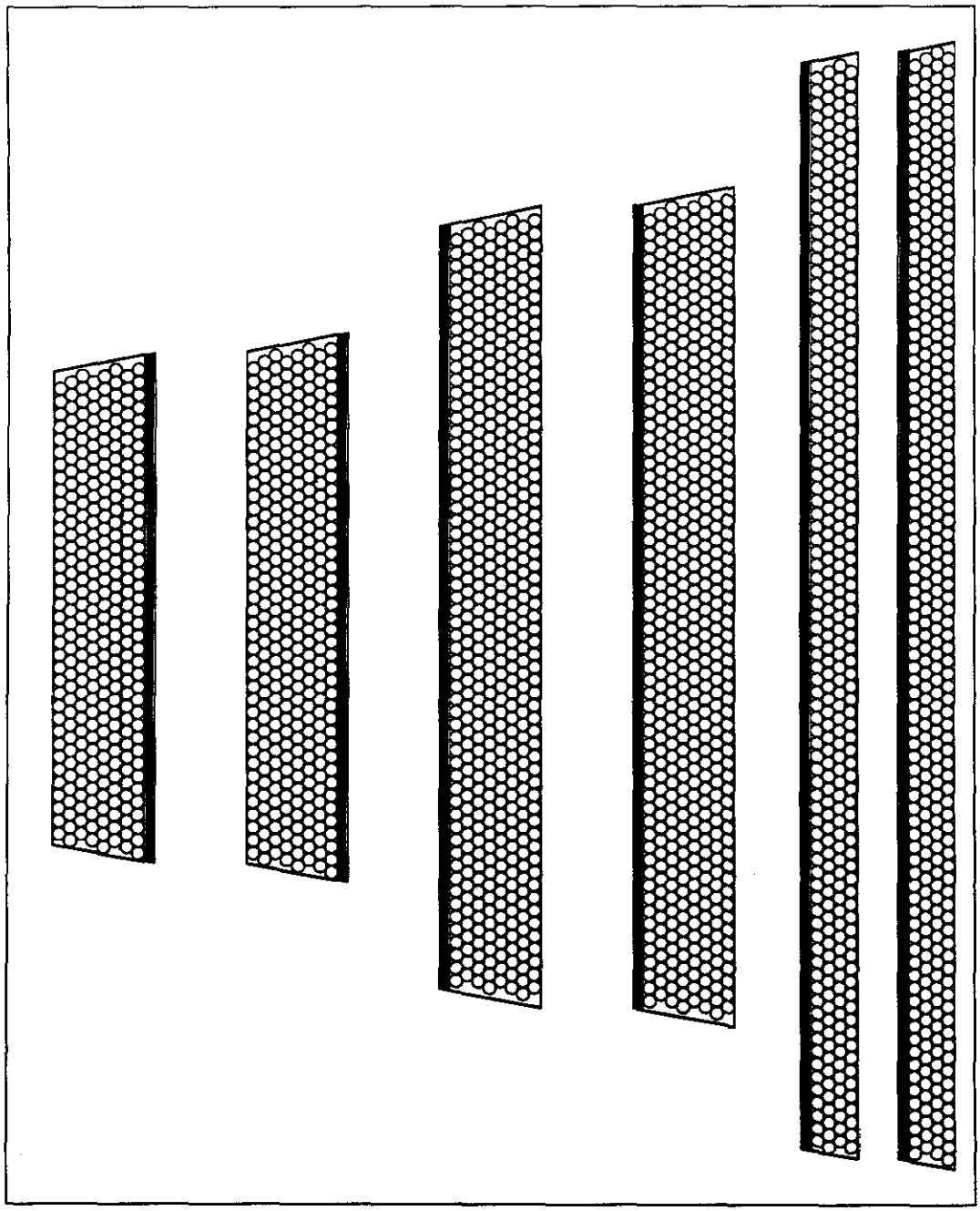

Figure 18: Muon barrel chambers

In fig.19 and fig.20 the muon endcap structure and the typical endcap muon chambers used are presented.

For creation GEM geometry volumes and positioning them a set of standard rotations and the current index for nonstandard ones are defined via routine XSROTM. Used in the following rotation matrix convention:

- IR000D : (x,y,z) → (x, y, z)
- IR180D : (x,y,z) → (-x, y,-z)
- IRZSXD : (x,y,z) → (y,-z, x)
- IR90XD : (x,y,z) → (y, z, x)
- IR90YD : (x,y,z) → (z, x, y)
- ISXYXD : (x,y,z) → (x, y,-z)
- ISXZXD : (x,y,z) → (x,-y, z)
- ISYZXD : (x,y,z) → (-x, y, z)
- IR90ZD : (x,y,z) → (-x, z, y)
- IR180X : (x,y,z) → (x,-y,-z)
- IRZ45P Rotation matrix index for a rotation around the Z about of 45 degrees
- IRZ45N Rotation matrix index for a rotation around the Z about of -45 degrees
- NROTXD Rotation matrix index of the last rotation defined

A few levels of description are provided for each subsystem so we can provide a consistent approach for description of the detector response from the level of the FULL simulation up to the level FAST ones. This particular level for a given subsystem defines via the FFREAD card "GEOM" (see below). Typical levels are: full detail, some details replaced with pseudomixtures but with hitting and pseudomixtures with no hitting (dead).

All materials and tracking media are defined in the routine (XSMATI/XSMATM), including pseudo mixtures. The tracking parameters of the pseudomixtures must include also parameterization of detector responses. The list of current material parameters is presented in Tabl.1, and 2 and 3 to provide possibility of checking them. The materials are separated into two categories: the pure materials and mixtures which is built from the pure material.

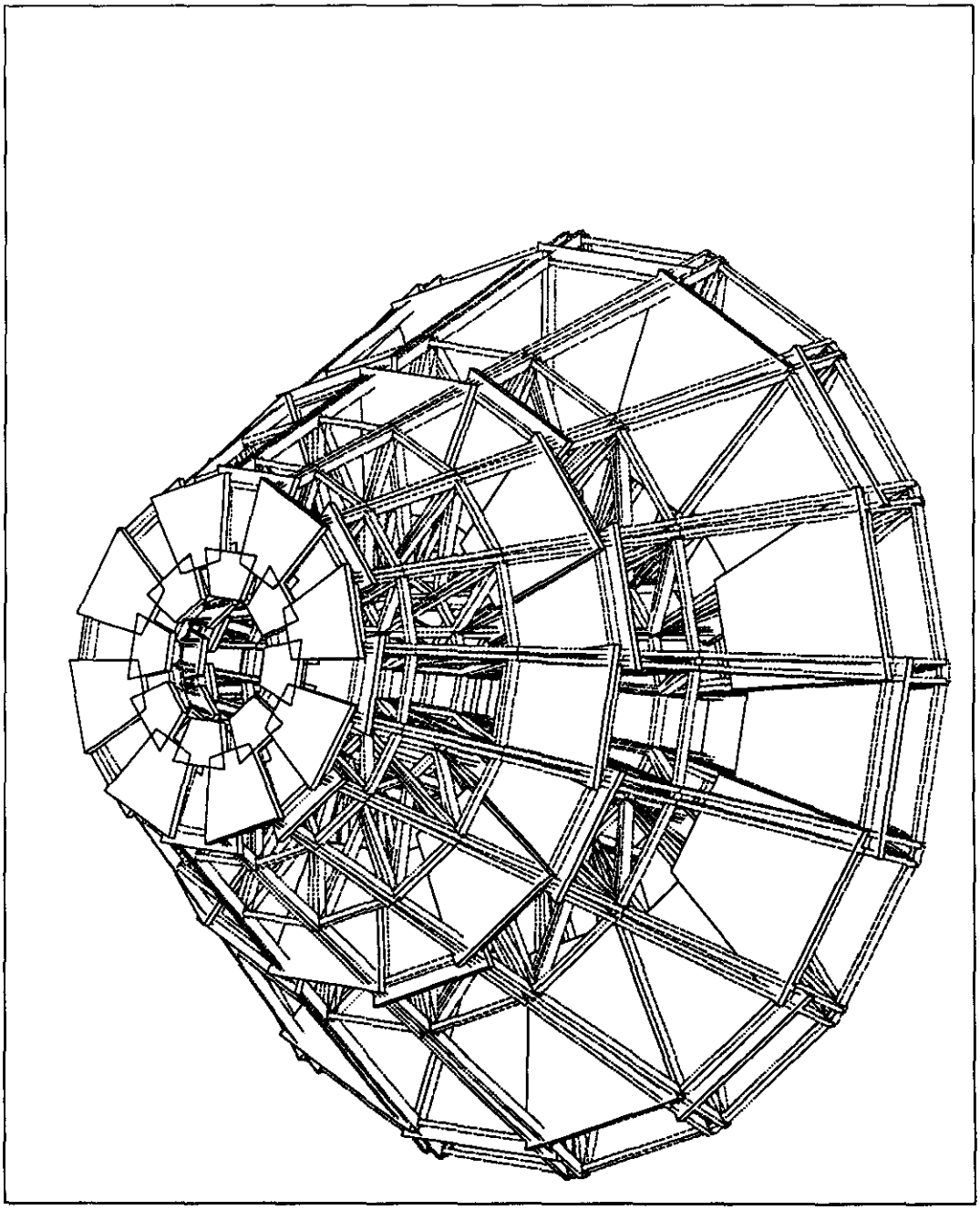

Figure 19: Muon endcap structure

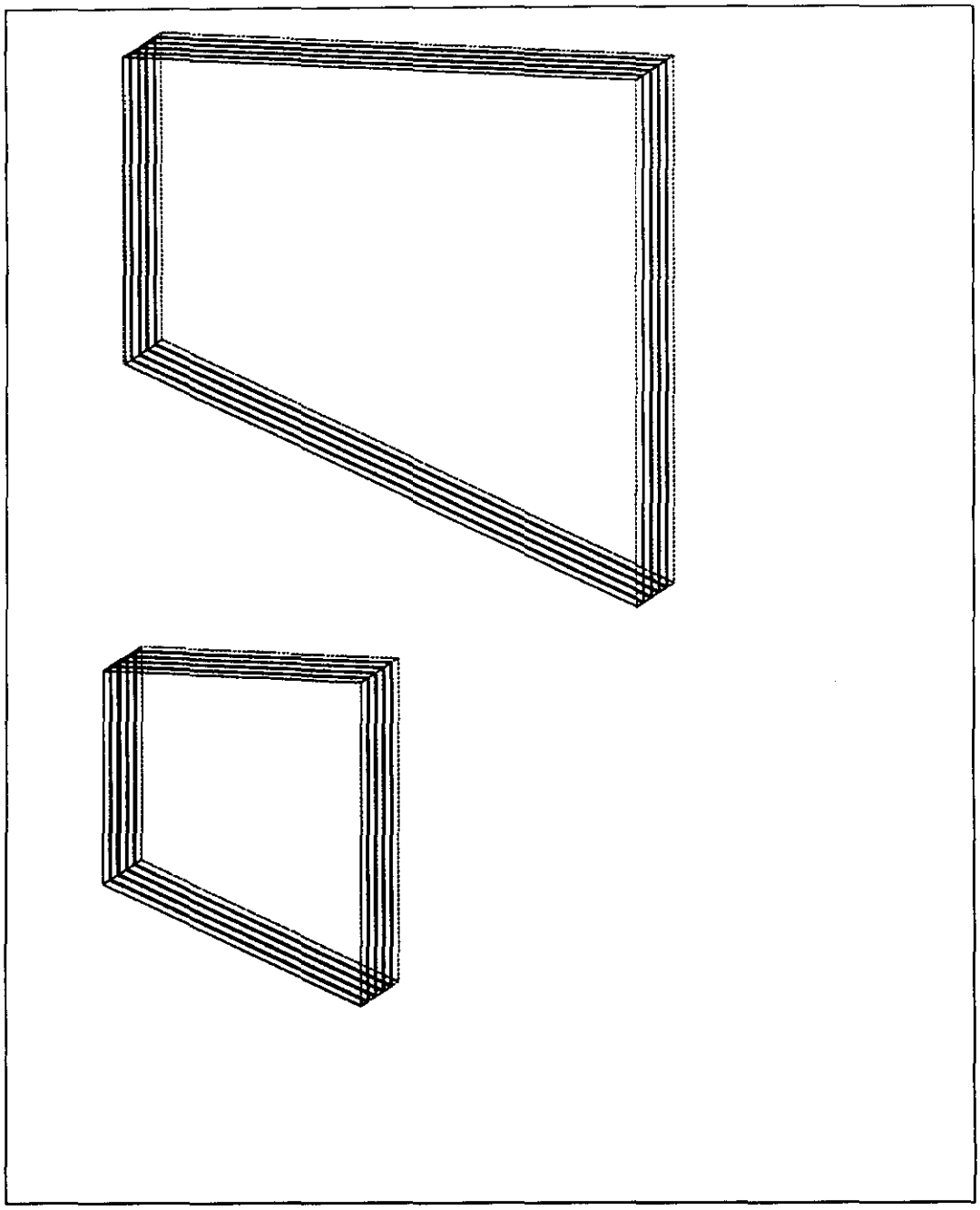

Figure 20: Muon endcap cathode strip chambers

Table 1: The list of pure material parameters used in SIGEM. A material density (ρ) of zero means that this material was used only for mixture preparation.

No.	Name	A	Z	ρ	X_0	λ	ID
1	Hydrogen	1.01	1.	0.0708	865.	790.	MHYDXC
2	Deuterium	2.01	1.	0.162	757.	342.	MDEUXC
3	Helium	4.	2.	0.125	755.	478.	MHEXXC
4	Lithium	6.94	3.	0.534	155.	120.6	MLIXXC
5	Berillium	9.01	4.	1.848	35.3	36.7	MBEXXC
6	Carbon	12.01	6.	2.265	18.8	49.9	MCXXXC
7	Nitrogen	14.01	7.	0.808	44.5	99.4	MNXXXC
8	Neon	20.18	10.	1.207	24.	74.9	MNEXXC
9	Aluminium	26.98	13.	2.7	8.9	37.2	MALXXC
10	Iron	55.85	26.	7.87	1.76	17.1	MFEXXC
11	Copper	63.54	29.	8.96	1.43	14.8	MCUXXC
12	Tungsten	183.85	74.	19.3	0.35	10.3	MWXXXC
13	Lead	207.19	82.	11.35	0.56	18.5	MPBXXC
14	Uranium	238.03	92.	18.95	0.32	12.	MUXXXC
15	Air	14.61	7.3	0.001205	30423.24	67500.	MAIRXC
16	Vacuum	10^{-16}	10^{-16}	10^{-16}	10^{-16}	10^{-16}	MVACXC
17	Argon	39.95	18.	0.	0.	0.	MARXXC
18	Krypton	83.80	36.	0.	0.	0.	MKRXXC
19	Silicon	28.09	14.	2.33	9.36	30.0	MSIXXC
20	Oxygen	16.00	8.	1.43×10^{-3}	23944.05	63.6×10^{3}	MOXXXC
21	Clorine	35.45	17.	0.	0.	0.	MCLXXC
22	Flourine	19.00	9.	0.	0.	0.	MFXXXC
23	Silicon D	28.09	14.	2.33	9.36	30.0	MSIDXC
24	Borom	10.811	5.	0	0	0	MBOXXC
25	Barium	137.327	56.	0	0	0	MBAXXC
26	Neobium	92.906	41.	9.41	0	0	MNBXXC
27	Titanium	47.880	22.	4.54	3.56	17.6	MTIXXC
28	Mangan.	54.938	25.	0.	0.	0.	MMNXXC
29	Chromium	51.996	24.	0.	0.	0.	MCRXXC
30	Nickel	58.690	28.	0.	0.	0.	MNIXXC
31	Molybden	95.940	42.	0.	0.	0.	MMOXXC

o

Table 2: The list of mix ture material parameters used in SIGEM. The contents are referred to the indexes for pure materials. The minus sign means the volume fraction.

No.	Name	ρ	Contents	Fraction	ID
51	CO_2	1.977×10^{-3}	-6 -20	1. 2.	MCO2XC
52	GAS	1.9573×10^{-3}	-6 -20 -1	0.52 0.4 8.0	MGASPC
53	Insulation	1.69	-3 -6 -1 -20 -9 -10	2.5% 4.5% 3.6% 1.8% 5% 18%	MINSXC
54	STR	2.64	-19 -20	1. 2.	MSTRXC
55	SLA	2.64	-19 -20	1. 2.	MSLAXC
56	CAP	2.64	-19 -20	1. 2.	MCAPXC
57	Freon-12	4.93	-6 -21 -22	1. 2. 2.	MFREON
58	Plexiglass	1.18	-1 -6 -20	8. 5. 2.	MPLEXC
59	Liquid Ar	1.40	-17	1.	MLARXC
60	Liquid ArD	1.40	-17	1.	MLARDC
61	Luquid Kr	2.41	-18	1.	MLKRXC
62	Luquid KrD	2.41	-18	1.	MLKRDC
63	G10 plate	1.70	-19 -20 -6 -1	28% 32% 37% 3%	MG10XC
64	ArCO_2 gas	3.7482×10^{-3}	-17 -6 -20	2×1 2.	MARCO2
65	CF_4 CO_2	2.5568×10^{-3}	-6 -20 -22	2×2 4.	MCF4CO
66	Isobutane	2.5955×10^{-3}	-6 -1	4. 10.	MC4H10
67	Honeycomb	0.280	-9	1.	MHONEY
68	Transmiss	0.293	-6 -1	1. 2.	MTRANS
69	Bakelite	1.40	-1 -4 -21	2. 2. 1.	MBAKEL
70	Support	2.64	-19 -20	1. 2.	MSUPRT
71	Borated Pol	0.95	-6 -1 -24	1. 2. 0.1	MPBORC
72	Lucite	1.16	-6 -1 -20	5. 8. 2.	MLUCIT
73	Mylar	1.39	-6 -1 -20	5. 4. 2.	MMYLAR
74	Ar/Pb E.M.	7.49	17 13	7.3% 92.7%	MARPBE
75	Ar/Cu Had.	7.87	17 11	2.6% 97%4	MARCUH
76	Ar/Cu Coar.	8.24	17 11	1.6% 98.4%	MARCUC
77	BaF_2	4.89	-25 -22	1. 2.	MBAF2C
78	PbSpaghetti	9.286	-13 -6 -1	80% 18.5% 1.5%	MPBSPA
79	CuSpaghetti	7.374	-11 -6 -1	80% 18.5% 1.5%	MCUSPA
80	Ar/W E.M.	17.10	17 12	0.33% 99.67%	MARWEM

Table 3: The list of mixture material parameters used in SIGEM. The minus sign means the volume fraction.

No.	Name	ρ	Contents	Fraction	ID
81	Ar/W Hadron	16.27	17 12	0.93% 99.07%	MARWHD
82	Ar/W Catcher	16.43	17 12	0.85% 99.15%	MARWCA
83	SC Cable	4.29	-11 -26 -27 -3 0	45% 4.5% 10.5% 40%	MSCABL
84	Magnet Cond	3.157	-11 -3 -9 -10	4.6% 4.1% 84.1% 5.7%	MGNCXC
85	Graphite Ep	1.703	-6	1.	MGRAPH
86	Graph.Cylin	0.163	-6	1.	MGRCYL
87	Kapton	1.39	-6 -1 -20	5. 8. 2.	KAPTON
88	Thick Iron	7.87	-10	1.	MFETXC
89	Cables	2.90	-6 -11	0.8 0.2	MCABLC
90	AISI Cr-Ni	8.02	10 29 30	70 % 19% 10%	MCRNIS
91	Methane	0.717×10^{-3}	-6 -1	1. 4.	MCH4XC
92	C Fibre Com	1.72	-6 -1 -20	10. 6. 1.	MCFIBR
93	Water	1.00	-1 -20	2. 1.	MWATER
94	Foam	0.293	-6 -1	1. 2.	MFOAMC
95	Kr/Pb E.M.	4.50	-18 -13 -10 -1	63.49% 20.63% 6.35% 3.4%	MKRPBE
96	Al support	0.972	-9	1.	MALSXC
97	CT cable	4.0145	-11 -6 -1 -20	.37 .21 .336 .084	MCTCBL

The geantino scan procedure for an estimation of number radiation and interaction lengths has been implemented. Thus it is provided a possibility in the interactive GEANT version to scan any volume or any set of volumes. The examples of scanning of the muon barrel PDT chambers and the barrel accordion calorimeter are presented in fig.21 and fig.22.

3 Hits and digitization

3.1 Hits

For the moment we limit ourselves to GEANT hit bank definition. To recognize different detector types we use " IDTYPE " flags which are defined as follows:

```
*
* *** TRAK
*
      PARAMETER (IDTRAK = 10 000)
      PARAMETER (IDSVTX = 11 000)
      PARAMETER (IDSVTB = 11 100, IDWFDA = 11 110, IDWFDB = 11 120)
      PARAMETER (IDSVTD = 11 200, IDWFDC = 11 210, IDWFDD = 11 220)
      PARAMETER (IDPADX = 12 000, IDPADB = 12 100, IDPADC = 12 200)
*
* *** CALO
*
      INTEGER IDCALO, IDBACC, IDBHAD, IDCACC, IDCHAD, IDCFRE, IDCFRH
      PARAMETER (IDCALO = 20 000, IDBACC = 21 100, IDBHAD = 21 200)
      PARAMETER                   (IDCACC = 22 100, IDCHAD = 22 200)
      PARAMETER                   (IDCFRE = 23 100, IDCFRH = 23 200)
*
* *** MUON
```

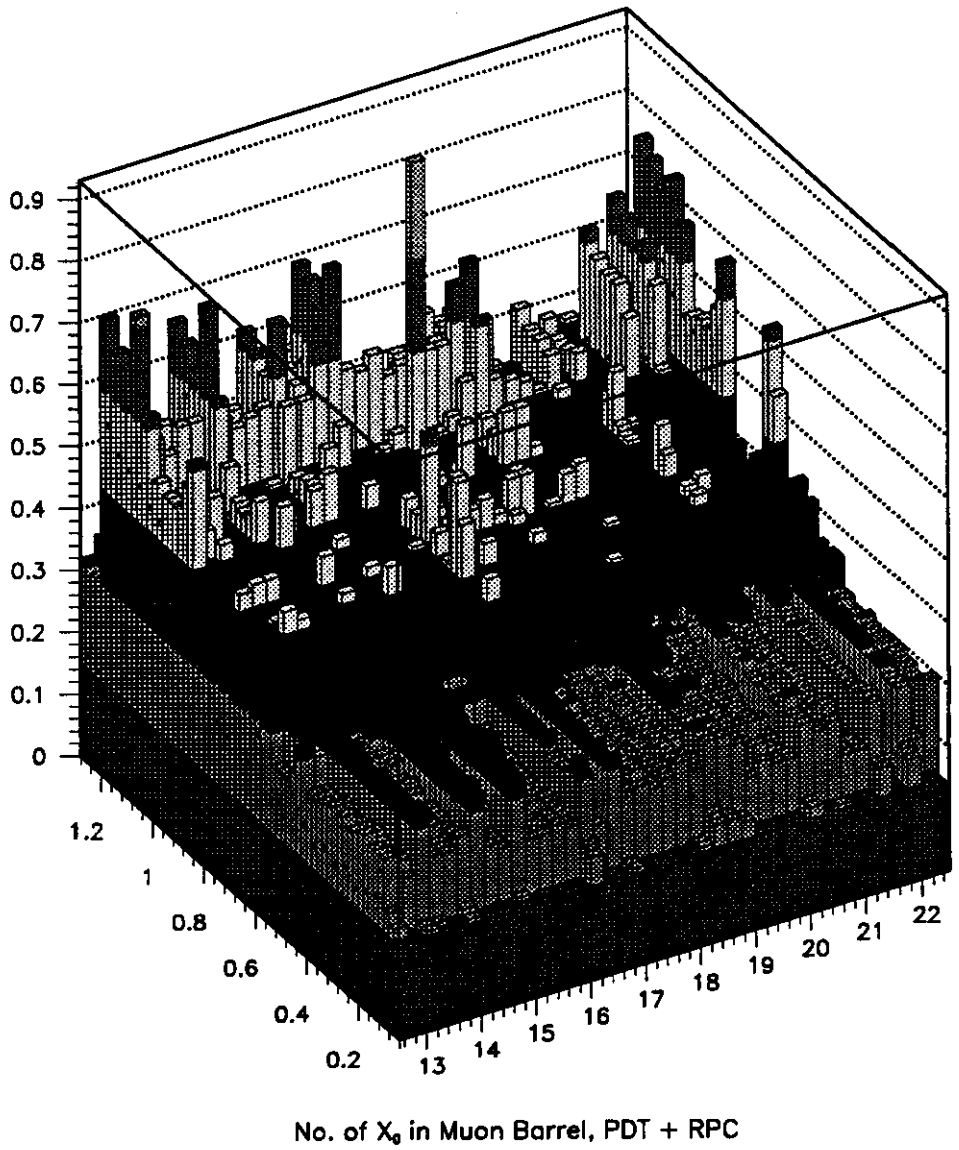

Figure 21: The result of the radiation lengths estimation in the muon barrel chambers

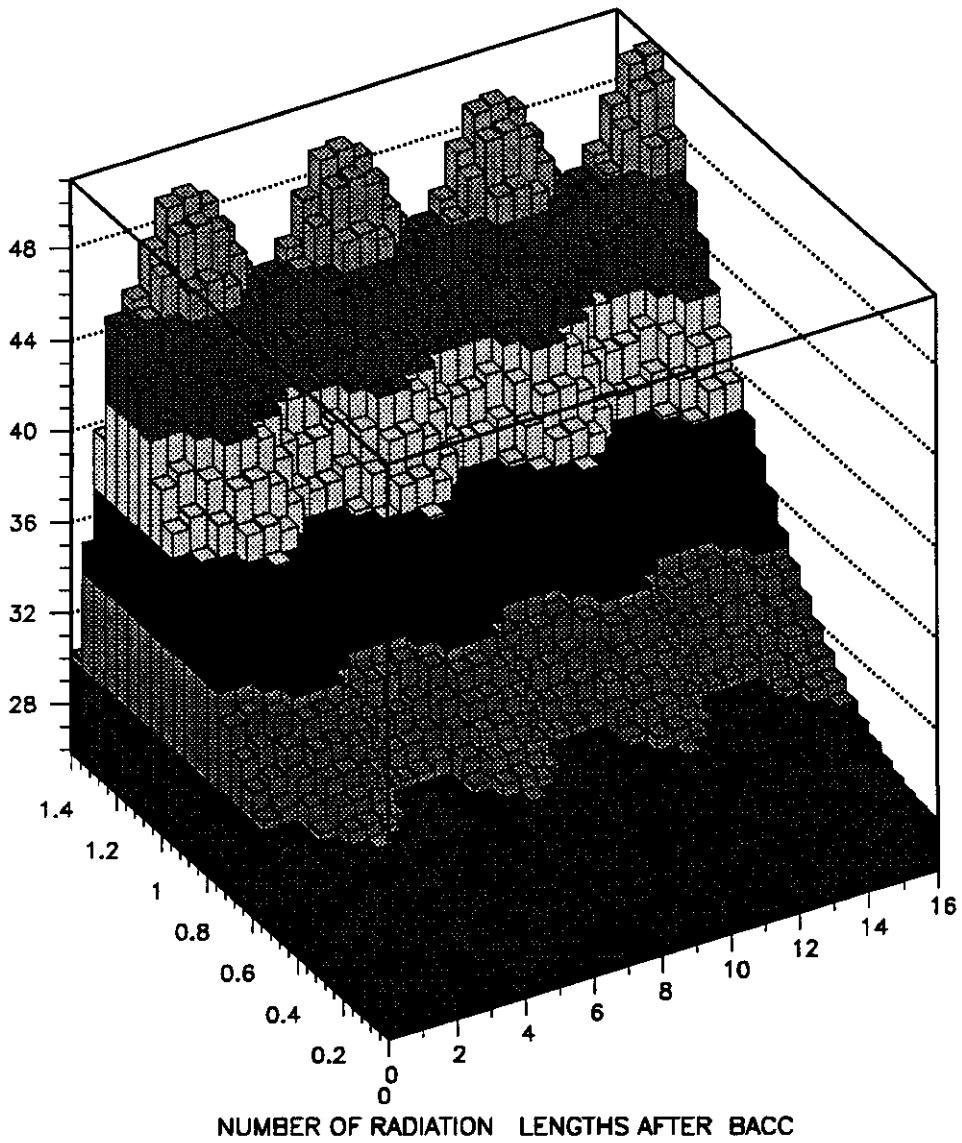

Figure 22: No. of radiation lengths after barrel accordion calorimeter

```
*
      INTEGER IDMUON, IDMPDT, IDMRPC, IDMCAP
      PARAMETER (IDMUON = 30 000, IDMPDT = 31 100, IDMRPC = 31 200)
      PARAMETER                   (IDMCAP = 32 100)
```

We require (in the sense of the reconstruction which follows) two types of hits:

- For tracking devices (TRAK + MUON) : a hit is
  - the number of the detector element which fired (**wire**), which is defined as a line in space by the coordinates (its center — X,Y,Z in the GEM coordinate system) and its direction (Θ and ϕ);
  - the distances from the wire ρ_W and along the wire Z_W;
  - the ionization (dE/dX) in this detector element;
  - the arrival time
- Calorimeters:
  - the number of the detector element (which fired **cell**), which is defined as a space point (X,Y,Z of the center of cell in GEM coordinate system);
  - the deposited energy — ionization (dE/dX);
  - the first three moments of time ($< t >_E, < t^2 >_E, < t^3 >_E$). We suppose $\Gamma(t - t_0)$-function for time shape of calorimeter response.

For the moment hits have been defined in the following format:

```
TRAK:
SVTX: 'XOUT','YOUT','ZOUT','DEDX','T-OF','YDET'
PADB: 'XOUT','YOUT','ZOUT','DEDX','T-OF','YDET','ZDET'
PADC: 'XOUT','YOUT','ZOUT','DEDX','T-OF','YDET','ETA

CALO: 'XOUT','YOUT','ZOUT','DEDX','TOF1','TOF2','TOF3

MUON:
MPDT: 'XOUT','YOUT','ZOUT','DEDX','T-OF','TDRF
MRPC: 'XOUT','YOUT','ZOUT','DEDX','T-OF'
MCSC: 'XOUT','YOUT','ZOUT','DEDX','T-OF','PHID','Xdet', 'TDRF'
```

"X, Y, Z OUT" correspond to the coordinates of the exit point of the particle from the detector element (used for debug purposes only). "DEDX" is the — energy loss in the detector element. "T-OF" is the arrival time of the hit. "X, Y, Z, PHI, ETA" correspond to measured values in the coordinate system of each detector element. "TDRF" is the drift time.

All detector elements and hits are defined via **GSDETV** i.e. GEANT takes care of the unique definition of the detector element via a set of the volume numbers (NUMBV). From the other side this definition of SETS / DETector structure provides the unique way to reconstruct from the "detector element" number, position and direction of the fired wire (GLVOLU / GDTOM). Thus wire / cell number is an internal parameter of the system. In GUOUT a procedure for reformating hits from GEANT banks into NTUPLES for different types of detectors is provided.

The distributions obtained with this procedure for 10 bunch crossing with minimum bias events for different detectors are shown in fig.24. These events have been processed with the

overall cut 1 MeV. Of course it is early to make some conclusion on this statistical basis. But, nevertheless, one can see (in fig.26-28) that the hit rates in the Pressurized Drift Tubes (accounting the bunch crossing rate equals 60 MHz) is equal to $\approx$ 7 GHz, in the Resistive Plate Chambers — $\approx$ 1.5 GHz and in the muon Cathode Strip Chambers — 25 GHz. These numbers correspond to passing through detector element charged particle. No cuts on deposited energy were applied. A qualitative explanation of these rate can be found on fig.29 where it is shown fluxes of positrons and electron in the detector. These electrons and positrons are produced as a result of secondary interactions in the beam pipe region Quantity estimation of this effect and its influence on the detector has to be studied in the nearest future.

3.2 Digitization

The goal is to provide reasonable simulation data acquisition system — pipe-line to provide the input into trigger and data acquisition event builder. The digitization stage supposes

- Convolution in time of **hits** from some number of the nearest bunches — pipe-line simulation;
- Shaping and integration of signal with electronics;
- Accounting dead time;
- ...

This is the next stage of the simulation development. On the hitting stage we keep all information which is necessary to provide the time convolution but on this stage is very important input from hardware which is required the detailed knowledge of detector response and its hardware treatment.

4 File organization and running instruction

The GEM software tree is presently under development and is subject to change. SIGEM version 0 has been placed into the developing GEM software tree using its existing PATCHY structure. Future versions of SIGEM are subject to change in order to meet developing GEM software conventions.

4.1 File Organization

SIGEM version 0 has been built on each of the three architectures of the Physics Detector Simulation Facility (PDSF). Sources and installation files are available on PDSF in the GEM software tree, /gem. GEM software sources are located in /gem/RCS. Version 0 of SIGEM is located in /gem/RCS/sigem/v0 and consists of three PATCHY card files: **si.car, ut.car** and **xs.car**. GEM installation files are available in /gem/ins. Version 0 of SIGEM is located in /gem/ins/sigem/v0. This directory contains a PATCHY cradle, an installation shell script, FORTRAN sources, object files and a "sigem" binary executable.

4.2 Running Instructions

Users interested in running/developing SIGEM version 0 may build and execute programs using the following steps:

- Define the environment name GEM. Within the PDSF, one may use a command such as

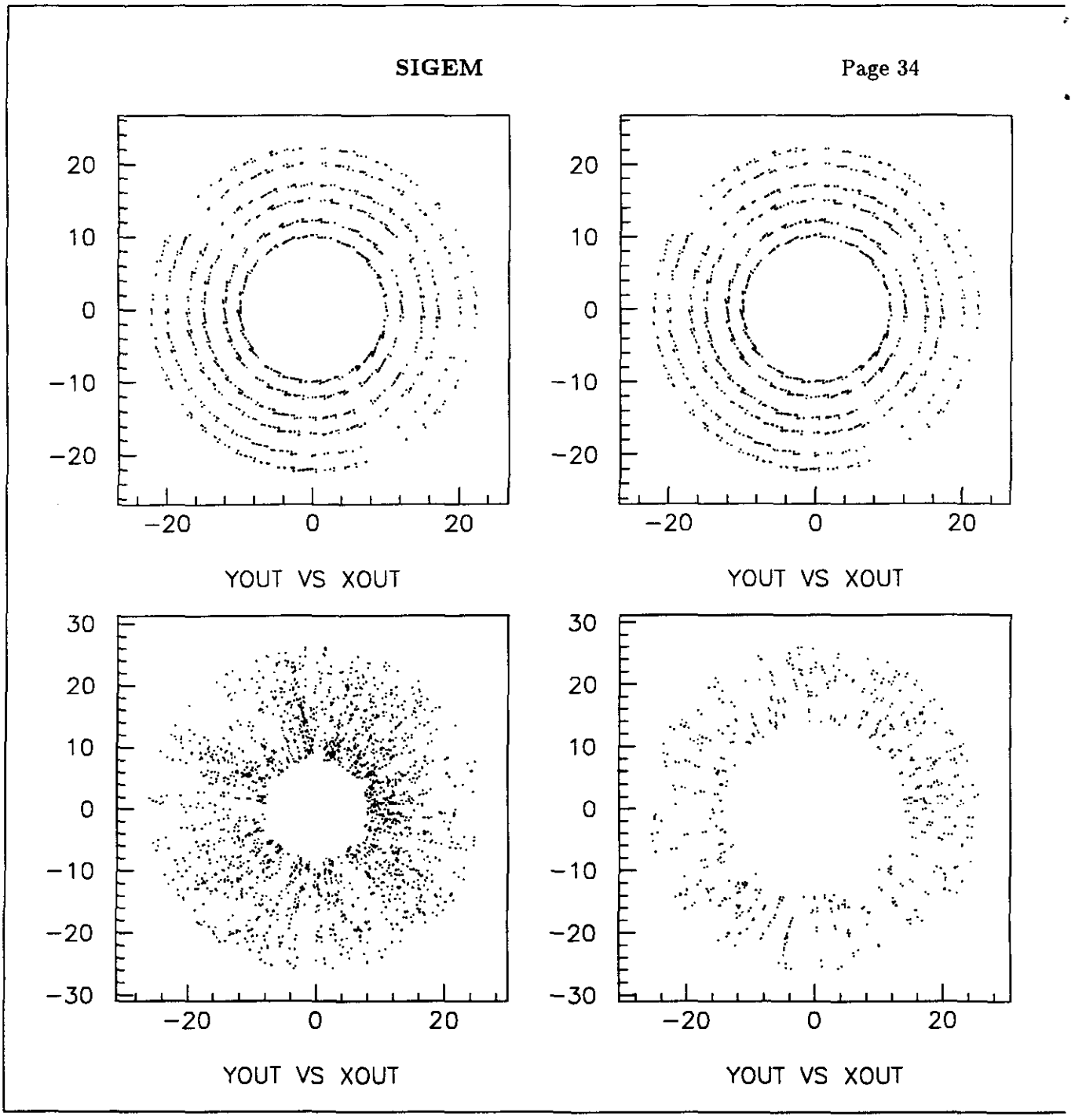

Figure 23: The scatter plot of X and Y in silicon barrel (upper histograms for both stereolayers) and endcaps (lower histograms) obtained for 10 bunch crossing of minimum bias events

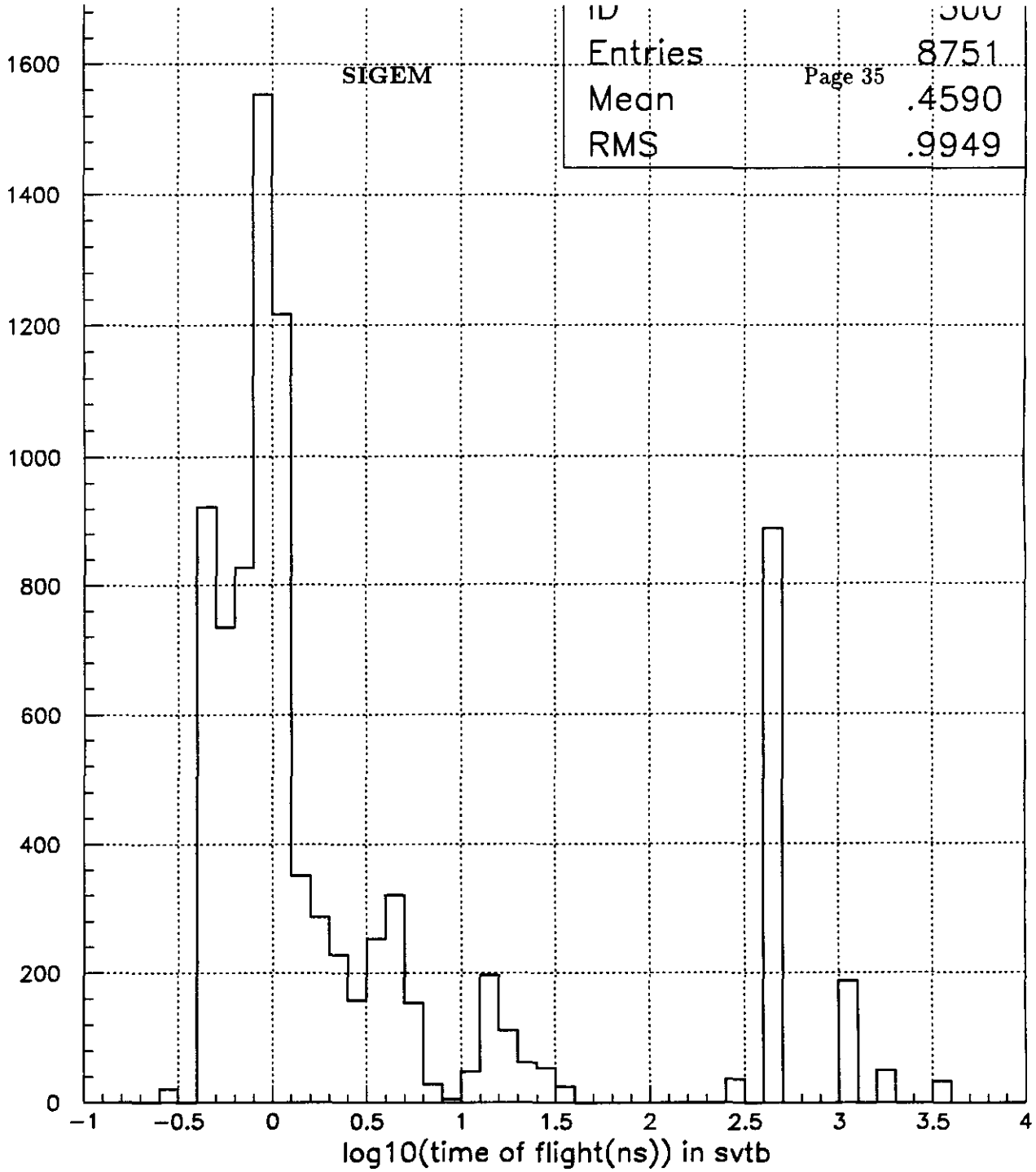

Figure 24: The hit arrival time (ns) in silicon barrel detector obtained from 10 bunch crossing of minimum bias events

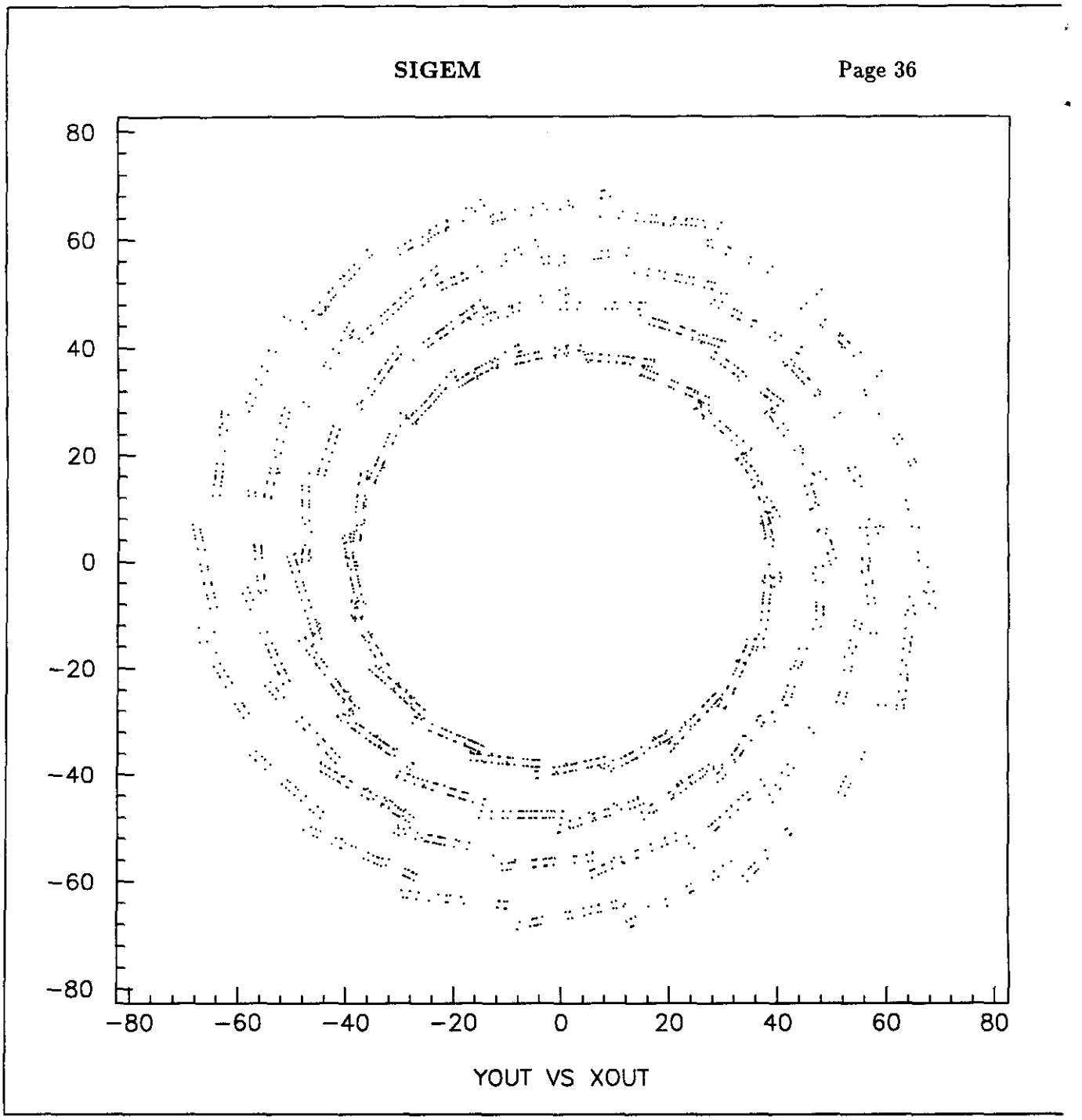

Figure 25: The scatter plot of X and Y in barrel Interpolating pad chambers obtained for 10 bunch crossing of minimum bias events

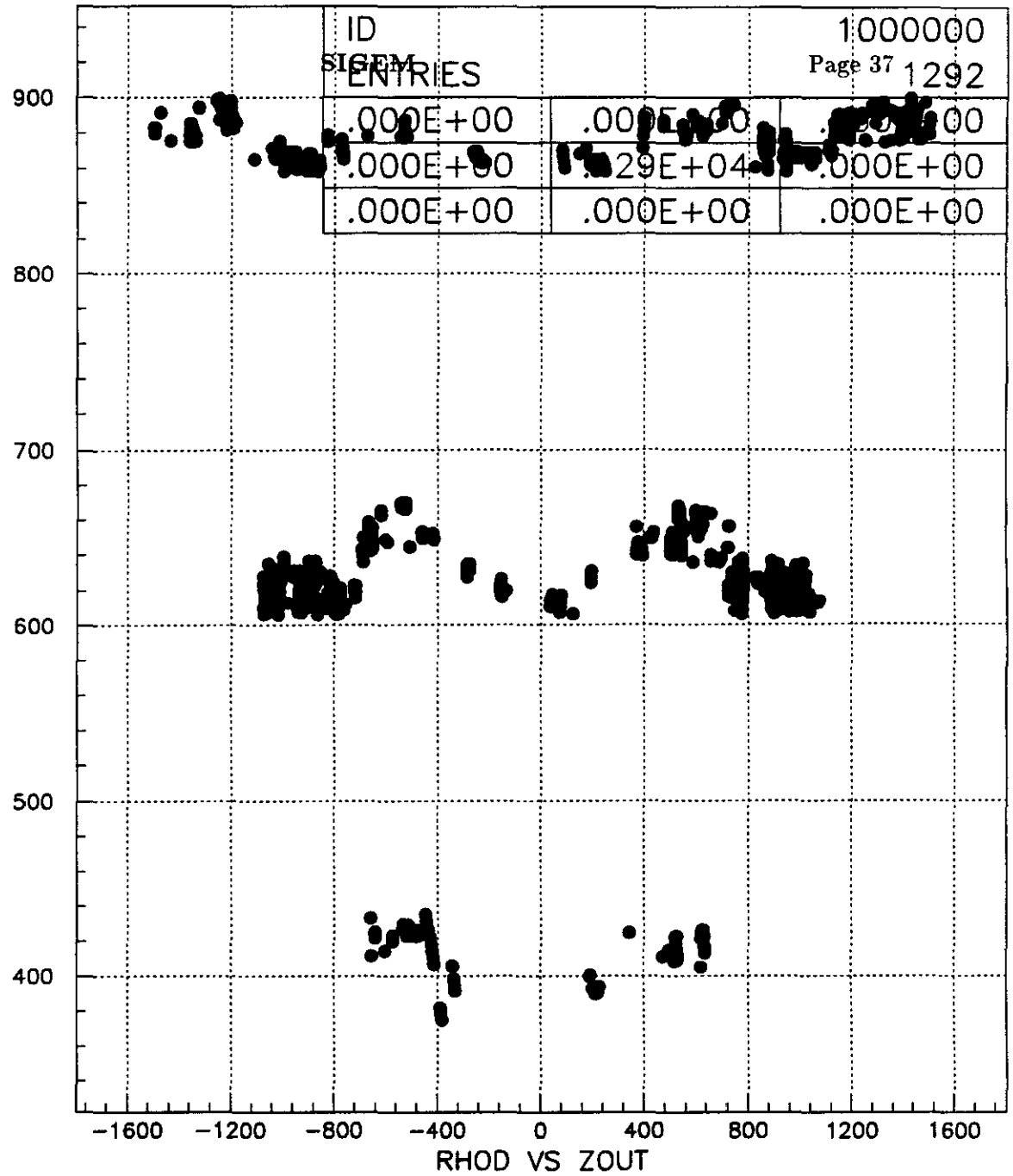

Figure 26: The scatter plot of R and Z in barrel Pressurized drift tubes obtained for 10 bunch crossing of minimum bias events

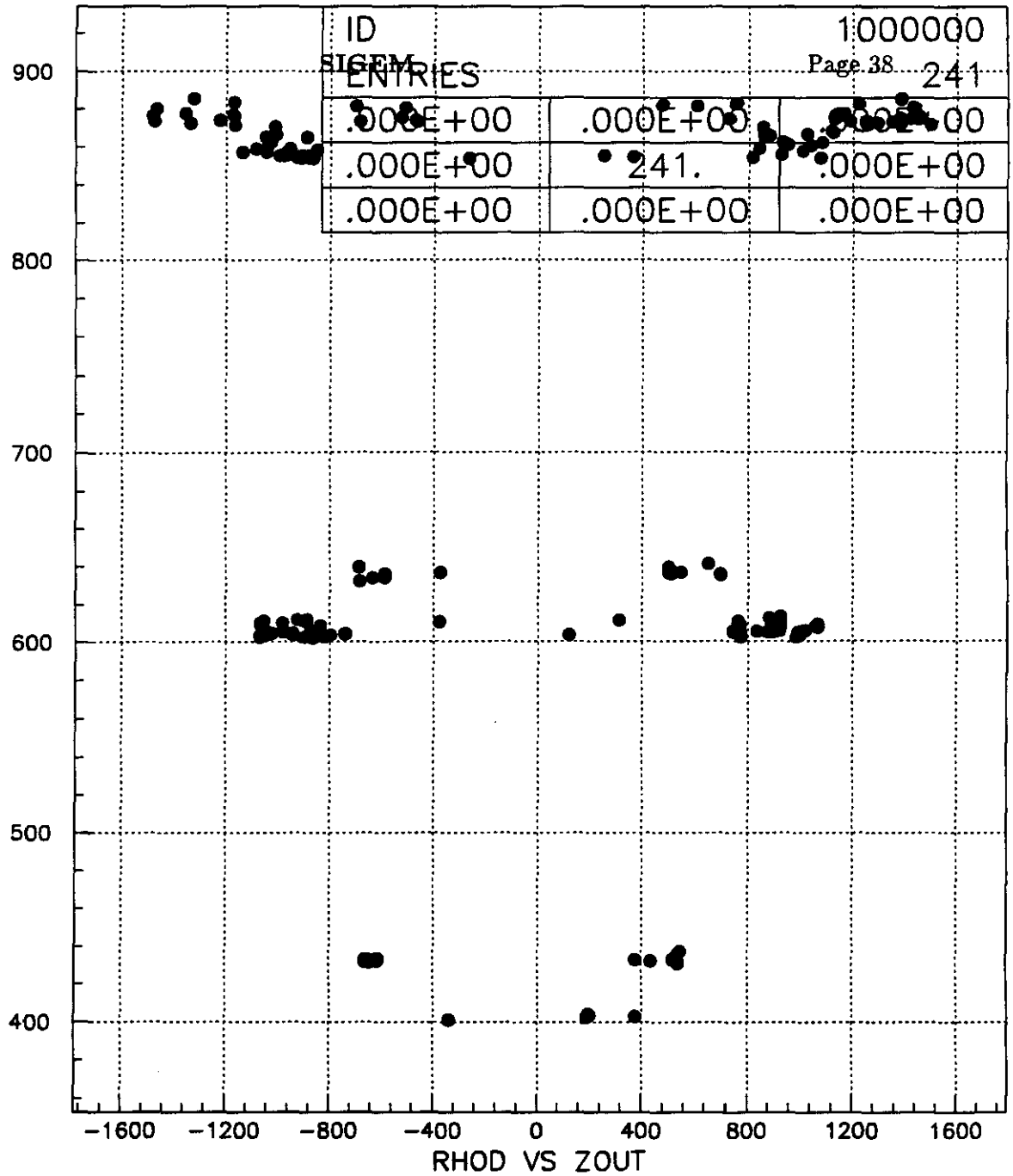

Figure 27: The scatter plot of R and Z in barrel Resistive plate chambers obtained for 10 bunch crossing of minimum bias events

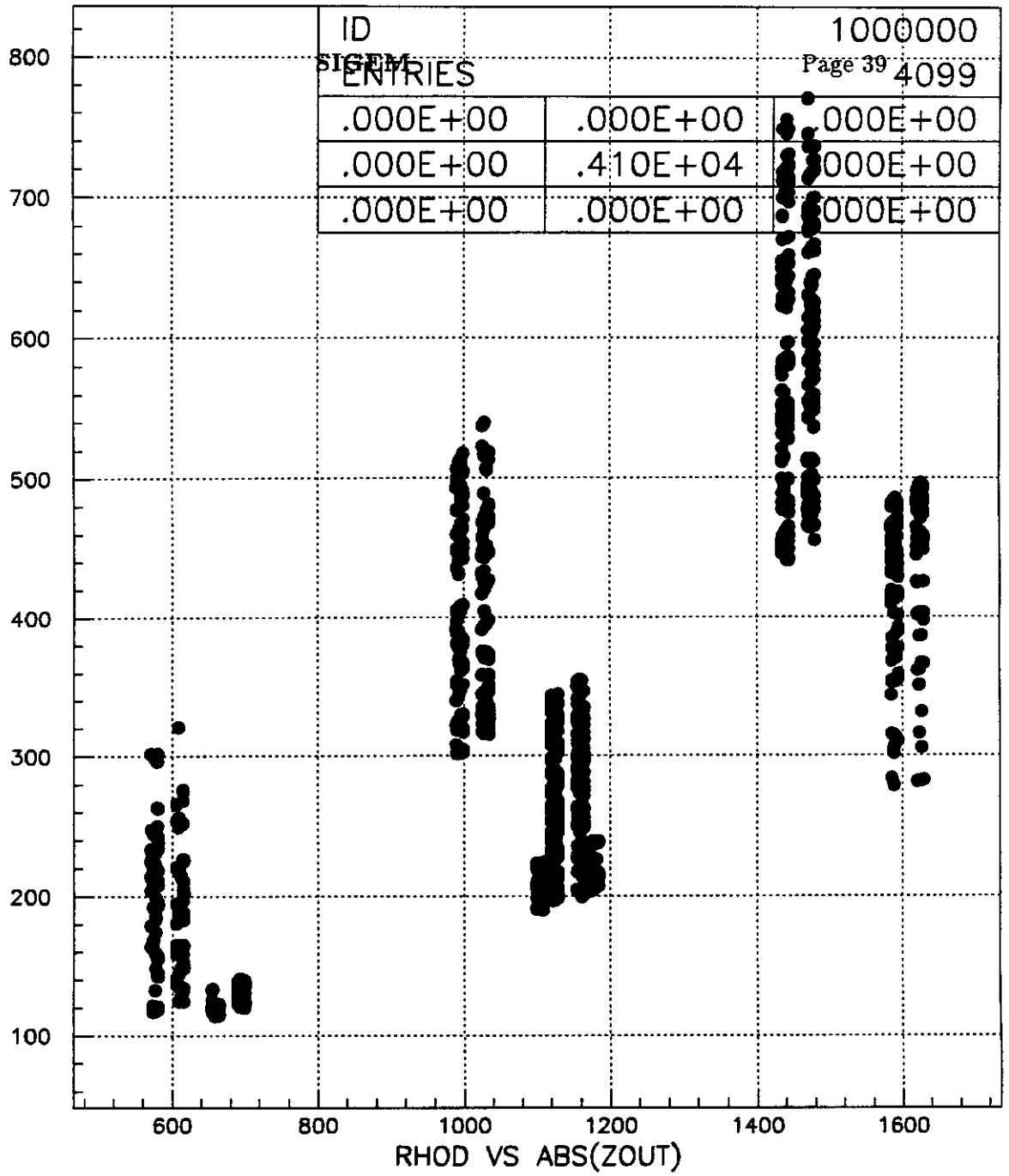

Figure 28: The scatter plot of R and $|Z|$ in endcap Cathode strip chambers obtained for 10 bunch crossing of minimum bias events

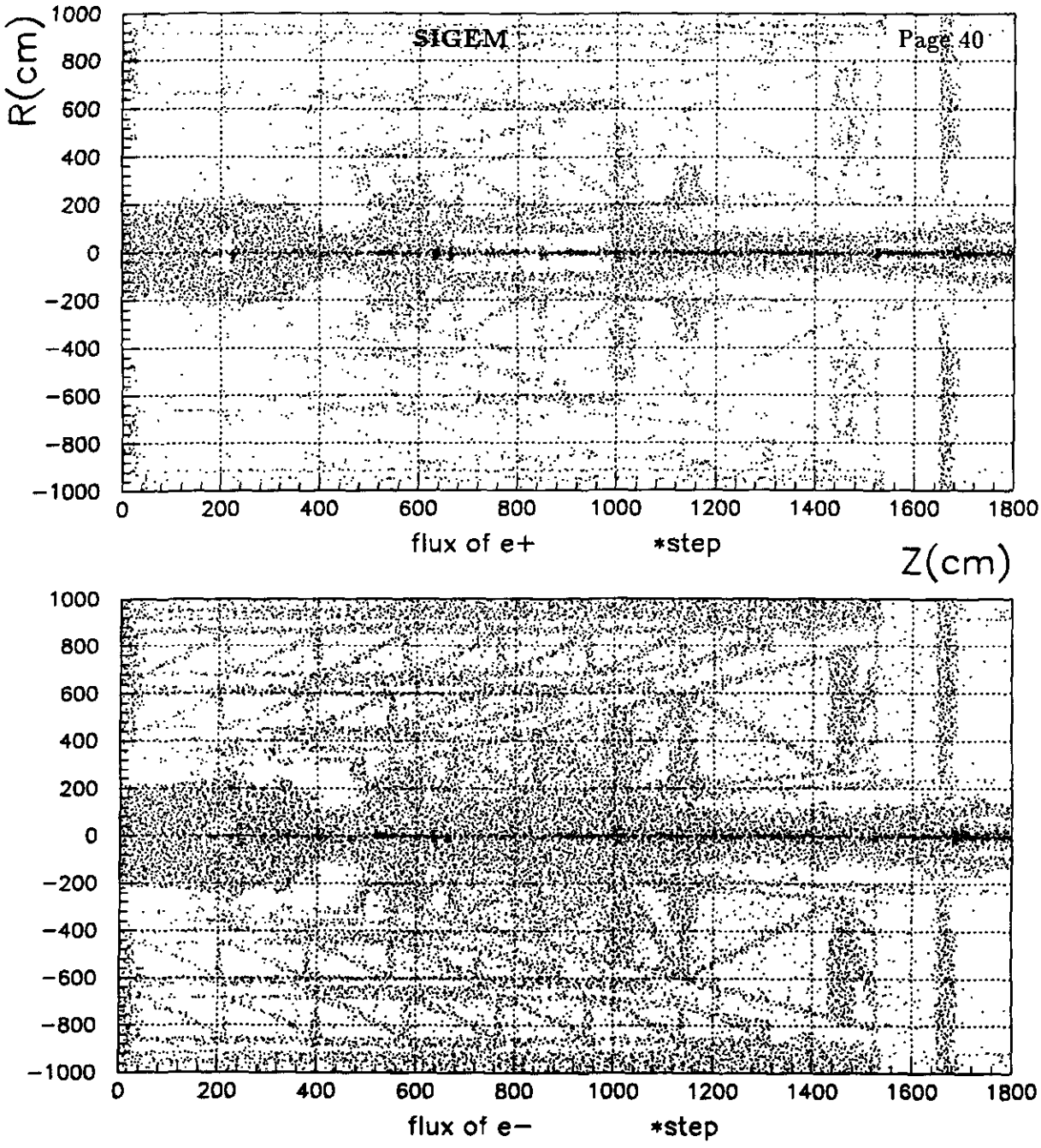

Figure 29: The scatter plot for fluxes of positrons and electrons versus R and $|Z|$ (positive R corresponds to the flux via surface with R = constant, negative — via surface Z = contstant) obtained for 10 bunch crossing of minimum bias events

```
% setenv GEM /gem
```

- Initialize the supported versions of the CERN Program Library and GEANT. Within the PDSF, one may use commands such as

```
% source /ssclib/init/cern_init.csh
% source /ssclib/init/geant_init.csh
```

- Copy the SIGEM v0 installation directory to your private working area. Within the PDSF, one may a command such as

```
% cp -r $GEM/ins/sigem/v0 v0
```

- Make any desired modifications to the SIGEM PATCHY cradle, sigem.CRA. When modifications are complete, invoke the installation script with the command

```
% ./sigem.sh
```

  This command extracts the sources from the PATCHY card files, splits and compiles the FORTRAN sources, builds a "sigem" binary executable and defines appropriate links for program input files.

- Execute the program by entering the command

```
% sigem
```

The GEM public directory structure[3] looks as the follwoing:

```
/gem
    RCS  -> ../gem_share/src
                          /sigem
                                v0/
                                   README
                                   si.car
                                   ut.car
                                   xs.car
    bin/
    contrib/
    demo/
    etc/
    include/
    ins/
                          /sigem
                                v0/
                                   sigem*    ! executable file
                                   sigem.ttl ! ffread cards for GEANT
```

```
                usually read from ftn04
        sigem.ttl ! field map
                reads from ftn02
        sigem.sh
        sigem.CRA
        sigem.cra
        *.f
        *.o
        libsigem.a
         ...
lib/
man/
src/
```

4.3 FFREAD data card and switches

GEANT3[2] uses the standard FFREAD package to read 'free format' data cards in the routine GFFGO.

The cards currently interpreted by GFFGO are classified into four categories:

- General control of the run.
- Control of the physics processes.
- Debug and I/O operations.
- User applications.

The data cards are listed below by category with the following information:

- KEY, card keyword, any number of characters truncated to the first 4
- N, maximum expected number of variables NVAR,
- T, TYPE of these variables (I=INTEGER, R=REAL or M=MIXED) and for each variable in turn:
  - VAR.., FORTRAN name
  - Short description (more detail in BASE 030)
  - Labelled COMMON where it is stored, and
  - Default value from GINIT.

When a card is decoded, the values entered by the user without explicit assignment are assigned to the variables in order. The number of values can be less than NVAR. In case of a MIXED type the values entered have to be in agreement with the default of the corresponding FORTRAN variable names.

Below it is listed the SIGEM specific data cards or the standard GEANT cards with changed meaning .

```
GEOM                (detector geometry specification)
----
```

WORD	TYPE	VARIABLE	DEFAULT	CONTENT
1	M	LGEOM(1)	<BLANK>	geometrical setup to be used at the
..	m	....	.....	time of simulation or
20	M	LGEOM(20)	<BLANK>	reconstruction

The data card GEOM, interpreted by the routine UTGEOM, consists of keywords each followed by an argument. There are three levels of keywords :

- 1. 'GEM ' for the whole GEM setup
- 2. 'xxxx' for the 3 detector regions (xxxx=TRAK,CALO,MUON)
- 3. 'Geometry keyword' (see below)

The arguments (range -10 to 10) can be

- -1 not wanted
- 0 dummy
- 1 simplified geometry (default for simulation for the moment, will be default for reconstruction, may be omitted)
- 2 average (not effectively implemented so far)
- 3 exact geometry (will be default for simulation)
- 4 reserved for other geometries for event reconstruction and viewing
- 5 reserved for simplified geometry for simulation
- 6-10 reserved for more detailed geometries for event simulation

The level 1 ("GEM ") propagates its argument to all level 2 keywords except those explicitly mentioned. The level 2 (region keyword) propagates its argument to all relevant level 3 keywords, except those explicitly mentioned. If any level 3 keyword argument is explicitly specified by the user, it is transmitted under special circumstances to the corresponding level 2 keyword (so that level 3 keyword argument could never be larger than its corresponding level 2 keyword argument).

List of meaningful geometry keywords per region (as quoted in UTGEOM, see also in Fig.1):

- TRAK region : 'SVTX', 'PADX'
- CALO region : 'CBAR', 'CCAP', 'CFRW'
- MUON region : 'MBAR', 'MCAP'

Examples :

```
GEOM  'GEM '
GEOM  'CALO' 'CCAP' -1
GEOM  'GEM ' 'CCAP' -1
```

SELE (event selection)

Word	Type	Variable	Default	Content
1	I	ISEL(1)	-1	List of requests for event selection
..	I	...	-1	
300	I	ISEL(300)	-1	

The data card SELE accepts sequences of three numbers :

- Run number
- Event number of first event to be processed
- Number of consecutive events to be processed, including first.

If 0, the Run number is not tested, unless a non-zero run number has been already required, in which case, that run number is used for the test.

When only one sequence is given the third element of the triplet can be omitted, in which case a large number is taken by default. If 0, the third element of a triplet is interpreted as 1.

SETS (detector component action)

Word	Type	Variable	Default	Content
1	M	LSETS(1)	<blank>	Sets where action has to be carried
..	M	....	.....	out and the types of actions to be
20	M	LSETS(20)	<blank>	taken in each of these sets

The Sets of sensitive detectors are defined in the routines UTJSET + SIJSET(SImulation), + REJSET (REconstruction) during the creation of the initialisation structures, after the geometrical setup has been defined. In these routines, detector aliases are defined and are given names which may be, but do not need to be, names of existing volumes.

RNIP (randomizing Interaction Point)

Word	Type	Variable	Default	Content
1	R	SIGXSK	0.0	r.m.s. of distribution
2	R	SIGYSK	0.0	
3	R	SIGZSK	0.0	
4	R	DELXSK	0.0	average of IP position distribution
5	R	DELYSK	0.0	
6	R	DELZSK	0.0	

KINE (kinematics)

Word	Type	Variable	Default	Content
1	I	IKINE	0	process code to be generated
1	R	PKINE(1)	0.0...	parameters
..	R	....	.....	
20	R	PKINE(20)	0.0	

- No KINE data cards: GUKINE generates default single muon with momentum 100 GeV/c and $\theta = 60$ deg and $\phi = 60$ deg;
- IKINE $\leq$ 0: no action;
- IKINE = 1:
  - PKINE(1) — GEANT particle code (with GEM extension);
  - PKINE(2) — θ
  - PKINE(3) — ϕ
  - PKINE(4) — its momentum
  - PKINE(5:7) — XYZ of vertex
- IKINE = 2: Simple multi-pion event;
- IKINE = 9: user defined kinematics via routine SIKIN9;
- IKINE $\geq$ 10: LUND event with MSEL = IKINE - 10.

The GEANT IOPA cards GET and SAVE are used to read and write events in FZ-format (logical names "fzin/fzout"). The cards RGET and RSAVE are used to read and write the GEANT materials, volumes, detectors sets, rotation matrix and particles data as a RZ-file (logical names "rzin/rzout").

SWIT (GEANT switch card)

Word	Type	Variable	Default	Content
1	I	ISWIT(1)	0	(General + Kinematics) debug control
2	I	ISWIT(2)	0	Debug control for tracking
3	I	ISWIT(3)	0	Debug control for hits
4	I	ISWIT(4)	0	Debug control for digitization and trigger
5	I	ISWIT(5)	0	Controls GUOUT output (1 -> GPHITS)

For the moment we use standard GEANT315 set (GDEBUG):

```
*
*             Debug/plot event
      IF(IDEBUG.NE.0) THEN
        IF((ISWIT(2).EQ.1).OR.(ISWIT(3).EQ.1)
     +                    .OR.(ISWIT(2).EQ.4)) CALL GSXYZ
        IF (ISWIT(2).EQ.2) CALL GPCXYZ
        IF (ISWIT(1).EQ.2) CALL GPGKIN
        IF (ISWIT(2).EQ.3) THEN
           IF(ISWIT(4).EQ.3.AND.CHARGE.EQ.0.)RETURN
           CALL GDCXYZ
           CALL IGSA(0)
        ELSEIF(ISWIT(2).EQ.4) THEN
           IF(ISTOP.NE.0) CALL GDTRAK(' ')
        ENDIF
      ENDIF
```

The typical set of data cards looks like:

```
LIST
DEBUG 1   100   1
*    GPGKIN GPCXYZ GSXYZ GPHITS
SWIT  1=2    2=2   3=1    5=1
*  1-st level of optimization
OPTI  1
PAIR  1
COMP  1
PHOT  1
PFIS  1
MULS  1
BREM  1
LOSS  2
DRAY  1
ANNI  1
MUNU  1
HADR  1
CUTS  0.001    0.001    6=0.0010 (BCUTE)    8=0.00100 (DCUTE)
PRINT 'MATE' 'VOLU'  'TMED' 'SETS'
HSTA  'TIME' 'SIZE' 'MULT' 'NTRA' 'STAK'
TIME 3=1         (TEST EACH EVENT)
TIME 2=10.       (TIME LEFT FOR UGLAST)
FIEL -1.0
RSAV 'INIT'
```

```
SAVE 'TRIG'
SETUP 5 5
JOBID 13
SELE  10*13
DAQT  920505 120000
RNIP  0.0050 0.0050 7.500 3*0.0
GEOM 'GEM ' 1
*kine 26 (higgs)
*trig 1
END
```

5 Conclusion

Status:

- The geometry for BASE line 1 (version C)[1] is coded except:
  - No SPACAL option;
  - No Accordion EM calorimeter for endcaps — for the moments only projective towers;
- HITS:
  - Hits are defined for all subsystems of the detector (calorimeters, central tracker and muon chambers)
  - No digitization, No bunch convolution
- Utilities are provided for hits/events saving and retrieving (IOPA GET/SAVE cards) via FZ in exchange mode.
- Saving and retrieving geometry / material / particles/... structures used during initialization via RZ files (RSAV/RGET cards).
- Transformation from GEANT hits to NTUPLES
- Saving and job restarting is provided via HBOOK RZ-file.
- A facility is provided to SCAN geometry of any subsystem of detector to calculate number of X_0 and λ's.

With this document we present the "FULL GEM" GEANT simulation (SIGEM) as the official release version **no. 0** for overall testing.

Bibliography

[1] " GEM Baseline 1 " , GEM TN-92-76 REV C

[2] " GEANT3 User's Guide ", DD/EE/84-1, September 1987, July 1991.

[3] I.Sheer, "Proposal for GEM software tree".