GEM TN-92-151

Texas Test Rig Laboratory Safety Evaluation

Ronn Woolley, Richard Guthrie
SSC Laboratory

September 29, 1992

Abstract:

This document is the safety evaluation for the Texas Test Rig (TTR) Laboratory. It's primary function is the identification of hazards, their mitigation and an appraisal of the overall safety of the TTR and its operation.

GEM-TN-92-151

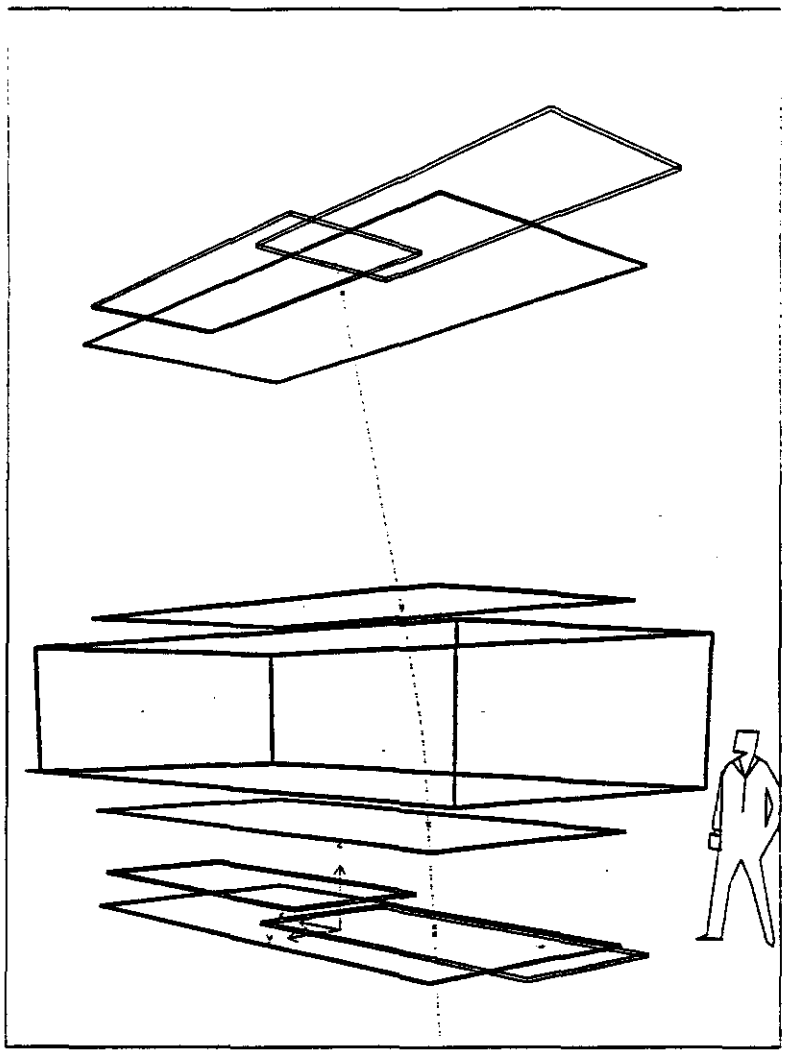

TEXAS TEST RIG LABORATORY

SAFETY EVALUATION

September 29, 1992

Prepared by

Ronn Woolley PRD
Richard Guthrie PRD

Approved by

Frederick J. Gilman 10/15/92
Fred Gilman Date
PRD Associate Director

G. Mitselmakher 10/15/92
Gena Mitselmakher Date
TTR Project Manager

Table of Contents

TABLE OF CONTENTS iii

LIST OF TABLES v

LIST OF FIGURES v

1.0 INTRODUCTION 1

1.1 Purpose and Method of Safety Evaluation 1
1.2 Safety Assessment and Conclusion 2

2.0 OVERVIEW OF THE TTR 3

2.1 Laboratory Objectives 3
2.2 Laboratory Layout and Operation 3
2.3 Principal Components 3
2.3.1 Magnet 3
2.3.2 Scintillation Counters 6
2.3.3 DAQ and Trigger Electronics 6
2.3.4 Data Analysis 6
2.3.5 Iarocci Tubes 6
2.3.6 Gas System 6
2.4 Laser Experiment 8
2.4.1 Ultra-Violet Laser Beam 8
2.4.2 Pressurized Chamber 8
2.4.3 Miscellaneous Components 8

3.0 SPECIFIC HAZARDS 10

3.1 Electrical Hazards 10
3.2 Structural Hazards 10
3.3 Magnet Test Hazards 10
3.4 Laser Hazards 10
3.5 Noise Hazards 10
3.6 Egress Hazards 10
3.7 Security 11
3.8 Environment Hazards 11
3.9 Fire Hazards 11
3.10 Material Handling Hazards 12
3.11 Radiation Hazards 12
3.12 Oxygen Deficiency Hazards 12
3.13 Mechanical Hazards 13

Table of Contents (Continued)

4.0 POTENTIAL HAZARD MITIGATION 14

4.1 Design Safeguards for Minimum Risk 14
4.2 Electrical Design Safety 14
4.3 Mechanical Design Safety 15
4.4 Access Control and Hazardous Warning Devices 15
4.5 Fire Protection 15
4.6 Operational Safety Procedures 16
4.7 Medical Certification for ODH 16
4.8 Safety Training 16

5.0 EMERGENCY PREPAREDNESS 18

5.1 Protective Equipment 18
5.2 Quality Assurance 18

REFERENCES 19

APPENDIX A HAZARD ANALYSIS A-1
A.1 Methodology A-1
A.1.1 Purpose A-1
A.1.2 Conceptual Hazard Analysis Criteria and Guidelines A-1
A.1.3 DOE Design Safety Criteria for Risk Reduction A-2
A.1.4 Risk Assessment A-2
A.1.5 Responsibilities A-3
A.2 Hazard Data Worksheets A-4
A.3 TTR Hazard Summary A-4

APPENDIX B ACRONYMS B-1

APPENDIX C OXYGEN DEFICIENCY ANALYSIS C-1

APPENDIX D MAGNET READINGS D-1

List of Tables

Table A-1 TTR Hazard Summary A-5
Table C-1 TTR Gas Flow Rates C-1
Table C-2 TTR ODH Summary Table C-4

List of Figures

Figure 2-1 TTR Laboratory Layout 4
Figure 2-2 TTR Frame and Magnet 5
Figure 2-3 Laser Experiment Layout 7
Figure 2-4 Gas Chamber for the Laser Experiment 8
Figure A-1 Risk Assessment Matrix A-3
Figure A-2 Severity of Consequences A-4
Figure D-1 TTR Magnetic Readings at 70 Amps D-2
Figure D-2 TTR Magnetic Readings at 120 Amps D-3
Figure D-3 TTR Magnetic Perimeter Readings at 120 Amps D-4

1.0 Introduction

The Superconducting Super Collider Laboratory (SSCL) is a high energy physics research laboratory operated by the Universities Research Association (URA) under contract from the Department of Energy (DOE). The GEM (Gamma, Electron, Muon) Collaboration has constructed a test facility at the SSCL to evaluate several muon-chamber prototypes, the Texas Test Rig (TTR).

This document presents a Safety Evaluation (SE) for the TTR. The TTR is located at the south end of Building 4 of the Stoneridge complex in Dallas, Texas.

1.1 Purpose and Method of Safety Evaluation

From the outset, basic design concepts and design reviews of the TTR have included safety considerations and safeguards for personnel, the environment, property, and equipment. The purpose of this SE is to document the identified potential hazards and present the methods used to prevent or control hazards to the degree necessary to operate and maintain the TTR in a safe manner. One principal goal of the SE is to assure, by its review, that all environmental protection, safety, and health matters have been identified and, even more important, have been adequately addressed in the design and future operation of the TTR.

An SE presents a basic safety analysis of potential hazards associated with systems and operations. Their mitigation and control actions and requirements are also documented. Some 66 potential hazards have been classified and analyzed by the laboratory team. Hazard identification reveals that the TTR has hazards associated with electrical equipment and the presence of flammable gases. For convenience, the primary hazards in the hazard analysis have been divided into four categories - electrical, general, personnel, and fire/explosion.

Documentation of potential hazards and risks was provided by those engineers responsible for the systems and equipment. This method served as a primary means for hazard identification and influenced the different measures taken to mitigate or control the potential hazards through the design and installation phases.

The provision of safe working conditions for employees and prevention of damage or loss to Laboratory property is of paramount importance to the SSCL, DOE, and the public.

The following report sections include: (2.0) an overview of the physical facility, its systems and principal equipment; (3.0) a discussion of site specific hazards in twelve categories; and finally (4.0) an explanation of the mitigation methods for those hazards which can be controlled. A summary of each hazard is enclosed in Appendix A. Appendix B contains abbreviations and acronyms of safety related terms.

1.2 Safety Assessment and Conclusion

This report describes the objectives, physical layout, and specific function of the TTR. It is the primary safety evaluation and assessment document for this facility. The TTR Laboratory is found to be a low risk facility (as defined in DOE 5481.1B, Chapter II, paragraph 5). It is concluded that the laboratory is safe as built and is safe to conduct experiments as planned.

Extensive safety review of the design and operation is demonstrated by the hazard analysis included in the body of this evaluation and in Appendix A. Safety was an inherent part of the equipment design process and operational planning review. Risks have been minimized to an acceptable level by design safety features, development of operational safety procedures, development of supplemental emergency procedures, and planned training and administrative controls.

2.0 Overview of TTR

The TTR Laboratory is a ground level laboratory located at the SSCL Stoneridge complex. The TTR is contained in one room with computer facilities located in an adjacent room.

The laboratory has been designed and constructed, and will be commissioned, operated, and maintained by the Physic Research Division (PRD). The TTR Laboratory has been classified as business occupancy, ordinary hazard per the NFPA 101, Life Safety Code and as Group B, Division 2 per the Uniform Building Code (UBC). The laboratory is in compliance with the occupancy safety requirements of NFPA 101 and the UBC per the above classification.

2.1 Laboratory Objectives

Evaluation will serve to select the detector technologies to be used in the GEM Muon System. Optimization of the muon system is one of the critical goals of the whole GEM R&D program since precise and robust muon measurement is one of the major features of the GEM detector and the muon system is the most expensive GEM detector subsystem.

2.2 Laboratory Layout

The workspace includes the TTR, the laser experiment, a computer room, a gas storage pad, a clean room, a 2-ton gantry for lifting and installing detector technologies, and numerous instrumentation. The layout is illustrated in Figure 2-1.

2.3 Principal Components

The TTR will consists of an iron toroid, two planes of scintillation counters (one above and the other below the magnet), two layers of larocci tubes above and two layers below the magnet, and several compartments to place the muon chambers under test. The frame and magnet portion of the TTR is shown in Figure 2-2. The dimensions of the largest muon-chamber prototypes will be 4m X 1m X 0.3m. Each of the TTR compartments will be about 5 m long, 2.1 m wide and 0.35 m high, so that it can accommodate larger prototypes in the future. It will contain a complex gas system, since each technology will use their own gas mixture. Information from about 1000 channels of Time-Digital Convertors (TDC) and Amplitude-Digital Convertors (ADC) will be read by a Data Acquisition System (DAQ) and then processed on the off-line computers.

2.3.1 Magnet

The 1 m thick iron of the magnet will harden the cosmic ray spectrum to muon momenta greater than 1.4 GeV. The muon spectrum can be further hardened (muon momenta greater than 5 to 10 GeV) by imposing off-line cuts on the

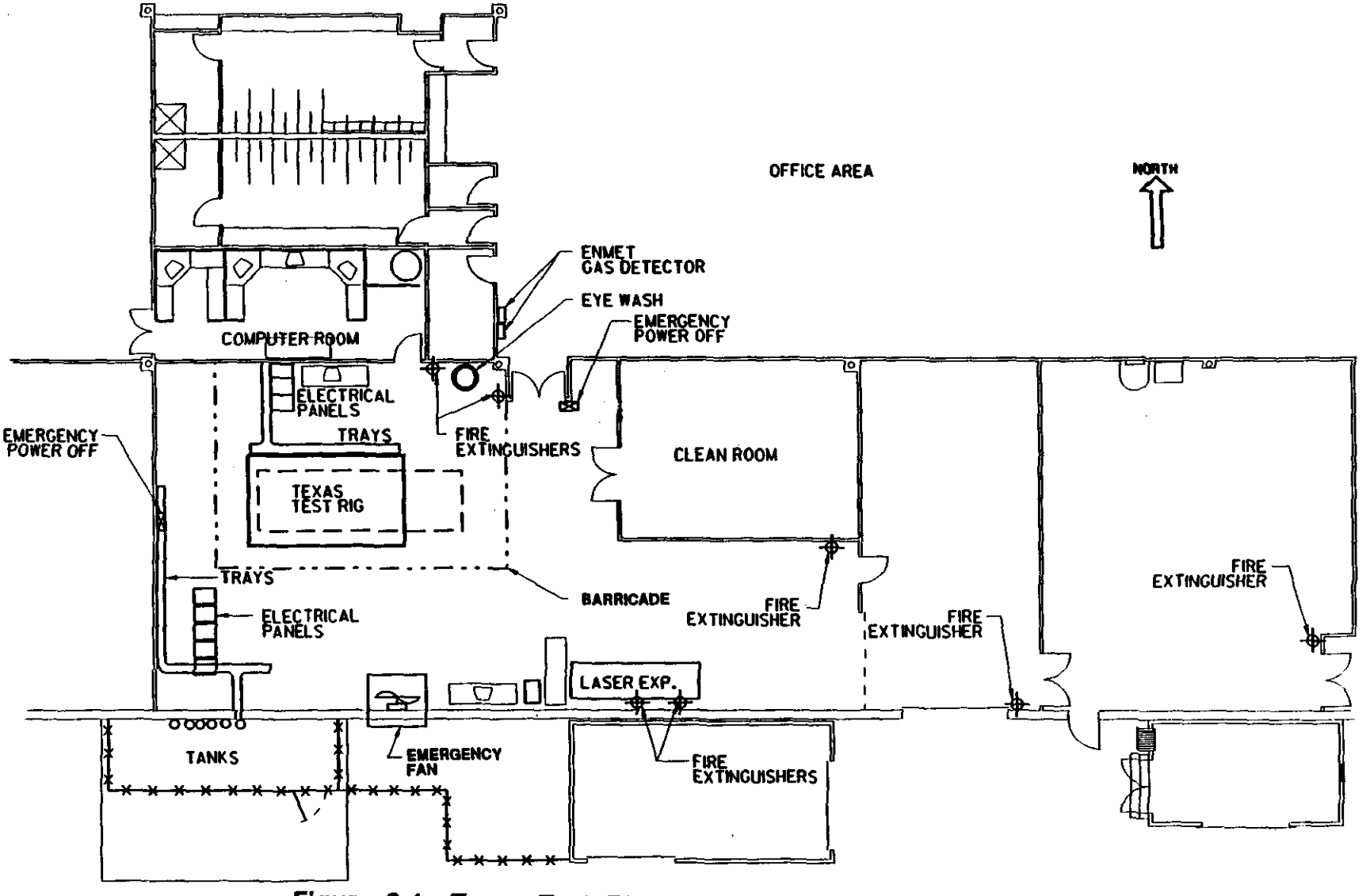

Figure 2-1 Texas Test Rig Laboratory Layout

deflection of the muon track before and after it traverses the 1.4 Tesla magnet; this will be done in order to keep the systematic error introduced by multiple scattering small compared to the expected resolution of the chamber prototypes. The muon direction above and below the magnetized iron is determined by using four planes of Iarocci chambers. The magnet was manufactured to an SSCL design to optimize unique applications for the TTR.

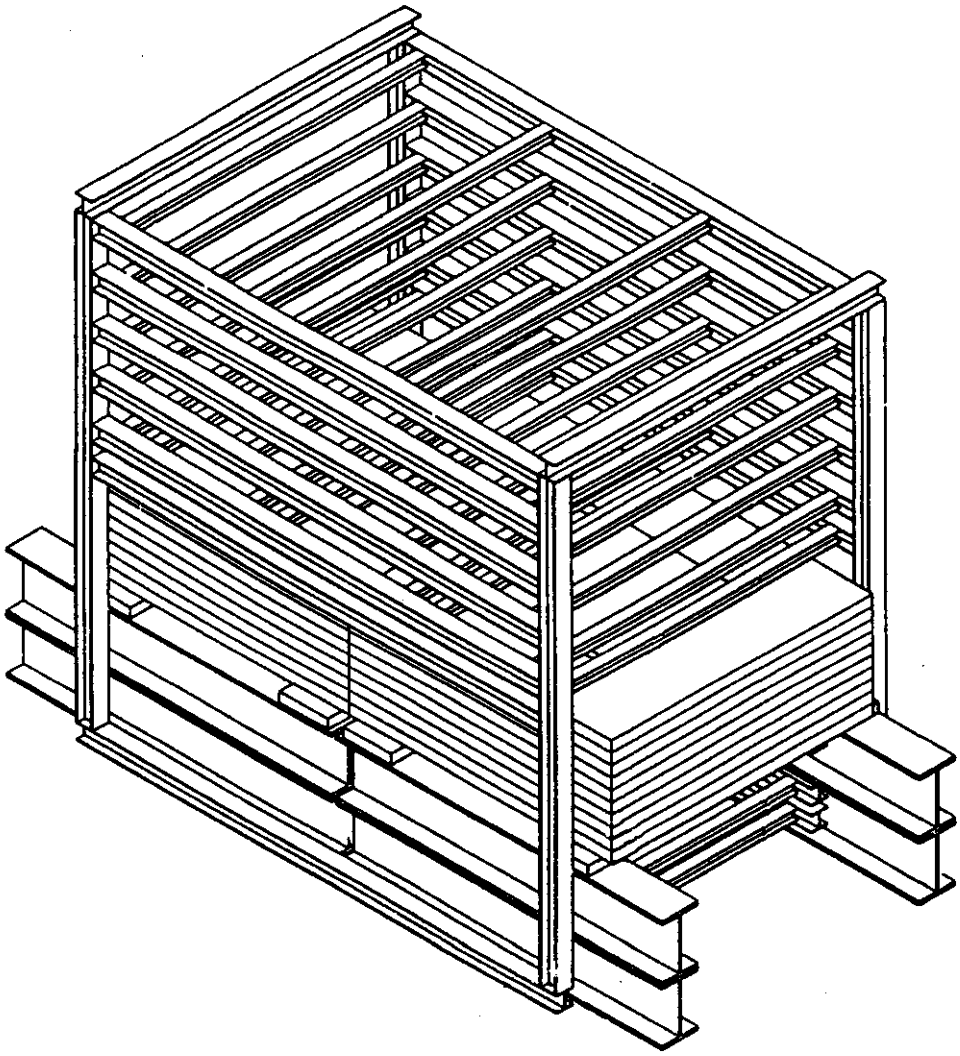

Figure 2-2 TTR Frame and Magnet

2.3.2 Scintillation Counters

The scintillation counters will provide both the trigger and the start signal for the TDC's. The scintillation counters will be 2.7 m long, 20 cm wide and 2.5 cm thick. There will be two layers, each of an area 5m X 1.2m; this will require 24 counters and 48 phototubes.

2.3.3 DAQ and Trigger Electronics

The coincidence of the signals from the scintillation counters and the four levels of Iarocci chambers will be the trigger for the data acquisition system (DAQ). The SSCL group will provide the trigger electronics, DAQ computer, mass storage, interface cards computer to CAMAC, and crate controllers. The proponents of the technologies will provide the CAMAC crates, the TDC and/or ADC modules, power supplies and the interconnecting cables that are required. The proponents will be responsible for making their prototypes operational at SSCL. The SSCL group will develop the basic data acquisition software in coordination with the DAQ liaison person of each of the proponent institutions.

2.3.4 Data Analysis

The SSCL will participate by making computing resources available and helping with the design and construction of the software. However, each proponent will be responsible for providing any technology-specific software, including any necessary calibration software.

2.3.5 Iarocci Tubes

The Iarocci chambers will provide both the trigger and a measurement of the incoming and outgoing directions of the muons. Each of the four planes of Iarocci chambers will provide X-Y position measurement with a cell size of 1 cm for each coordinate. The Institute for Beam Particle Dynamics at the University of Houston will provide the Iarocci chambers, strip boards, front end electronics, and CAMAC read out system. The gas system, high voltage supply, gas, and monitor/alarm system will be provided by SSCL.

2.3.6 Gas System

The prototypes use different gases (mixtures consisting of up to 4 gases). Most normal operating pressures for the technologies are expected to be slightly above atmospheric. Some will be higher than 5 psig, 20 psig and, in the case of the laser experiment, may go to 150 psig. The proponents of each technology will provide their own gas mixture requirements. The gas mixers have been built according to the applicable SSCL safety regulations and standards. The SSCL

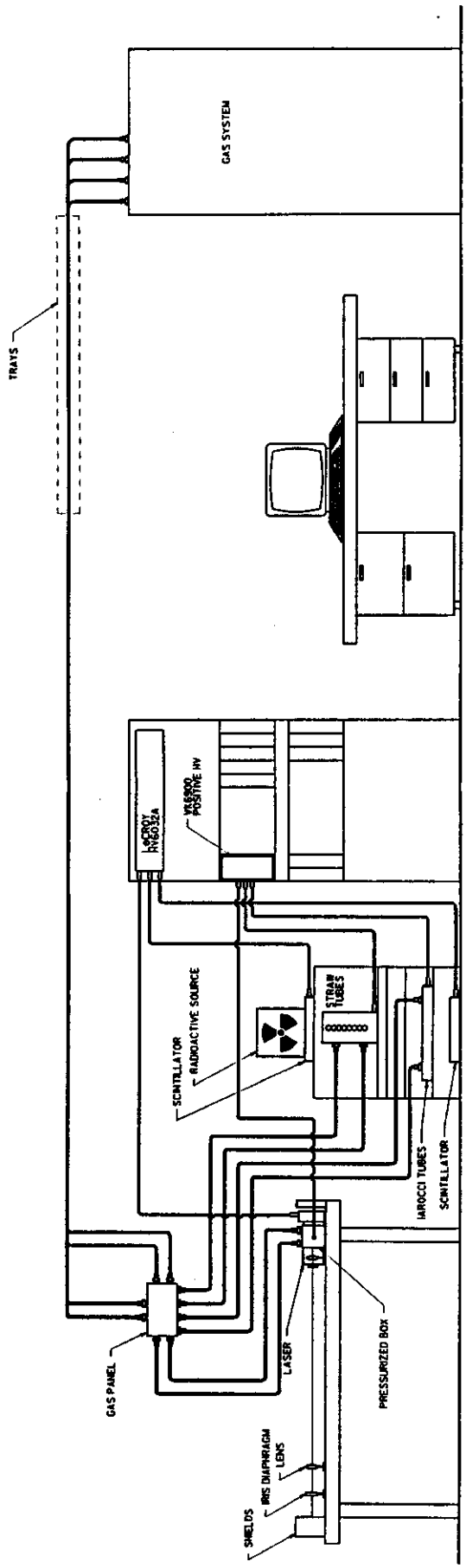

Figure 2-3 Laser Experiment Layout

will provide a complete gas system as a backup system for any of the technologies. The SSCL will also provide exhaust and alarm systems as well as the racks for the gas bottles.

2.4 Laser Experiment

Separate from the main structure of the TTR is a "small" experimental facility to study the properties of gaseous detector elementary cells. The setup is characterized by a small scale of the detector prototypes to be studied. The wide variety of experiments performed with this unit requires frequent changes of the detector type and configuration. Initial configuration and components of the laser experiment are shown in Figure 2-3.

2.4.1 Ultra-Violet Laser Beam

Tests of various types of detectors make use of a nitrogen UV laser beam as a source of ionization in detector sensitive volume (the laser wavelength is 337 nm, pulse energy is 0.25 mJ, rate is 20 Hz).

2.4.2 Pressurized Chamber

The small pressurized chamber allows the insertion of various drift cells into it (Figure 2-4). The chamber has two glass windows with specially designed gaskets, two slotted frames screwed to the flanges, and two viton o-rings providing gas and pressure sealing.

The volume of the pressurized chamber is about 1.3 liters (0.045 cubic feet), and will accommodate up to 10 liters (0.45 cubic feet) of gas at 10 atmospheres (150 psig). The concentration of flammable components (ethane, isobutane) in the gas mixture inside the chamber will not exceed 50%.

2.4.3 Miscellaneous Components

Technology testing for the laser experiment has "few" electronics channels exposed to either a known radioactive source or cosmic rays. For these purposes we have designed the frame with shelves to support the scintillators, detector prototype (like a stack of straw tubes), and Iarocci tubes.

The laser experiment will use positive high voltage power supplies (up to +10 kV) for the gaseous detectors, and negative high voltage power supplies (up to -3.3 kV) for the scintillator counters. One of the options calls for the use of an avalanche photodiode for laser beam detection in the laser experiment, which requires about 100 V negative voltage.

Shown in Figure 2-3 is the general setup for the laser experiment, including the two main sections. Both systems have the capability to operate at high (up to 10 atmospheres) pressure and normal (ambient) pressure. They also have the

capability to switch from one setup to another by modifying the tubing configuration of the gas panel and detectors.

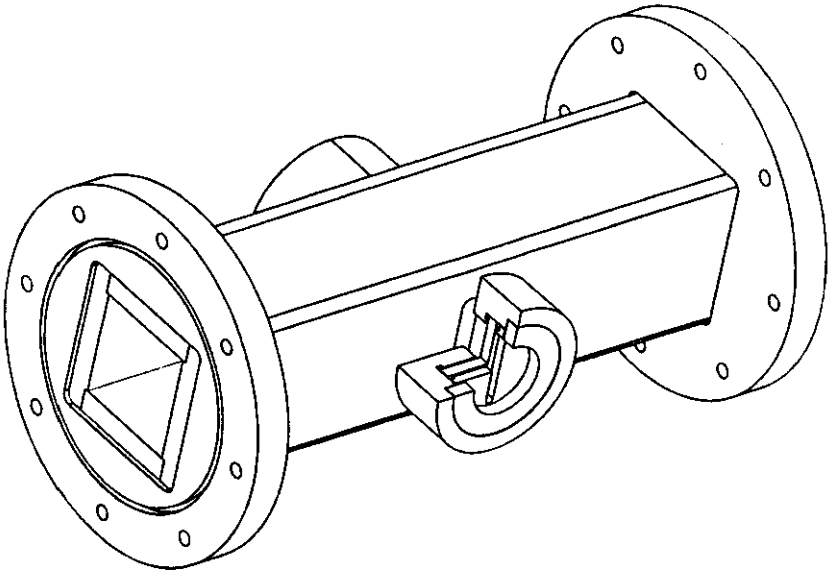

Figure 2-4 Gas Chamber for the Laser Experiment

3.0 Specific Hazards

3.1 Electric Hazards

Potential electrical hazards are encountered in the power supplies, power switch, and associated data acquisition modules. The primary potential hazard associated with this equipment is electrical shock at high voltage, or burn (i. e. arcing), and the possibility for overload, equipment damage, and fire.

3.2 Structural Hazards

There are no significant structural hazards for the main TTR frame. Analysis has been accomplished that show a minimum factor of safety of 1.5 for the type of loading anticipated for the various technologies.

3.3 Magnet Test Hazards

Magnetic field strength at approximately 3 meters from the magnet, while operating at the maximum current load available, is about 10 Gauss. (See Appendix D) Pacemaker Warnings shall be posted. There will be a barricade around the magnet during operation. Unauthorized personnel shall not be permitted near the magnet during actual testing. (See Figure 2-1)

3.4 Laser Hazards

The laser experiment uses a Class IIIB laser. Laser goggles will be required when aligning the beam. Unauthorized personnel shall not be permitted near the laser experiment area during actual testing. Personnel shall receive laser safety training. Laser operating procedures will be followed.

3.5 Noise Hazards

There are no significant noise hazards associated with the TTR. An exact measurement of the actual noise level will be made after the Laboratory is commissioned.

3.6 Egress Hazards

The TTR Laboratory has been classified as business occupancy, ordinary hazard per the NFPA 101, Life Safety Code and as Group B, Division 2 per the Uniform Building Code (UBC). Exit distances, fire door ratings, and aisle space all comply with NFPA 101 requirements for a business occupancy.

The TTR Laboratory has three entrance/egress points. (See Figure 2-1) There are three doors leading into the main TTR room as the floor plan indicates. The roll-up door is not considered an exit under the life safety code. The SSCL security system controls access to the south exterior door. However, it has a touch sensitive door exit button allowing for quick exit at any time. In the event of

a power failure, the magnetic lock would release and the door could be opened. The north and west doors, leading to an interior office area and then to a building exit, have a mechanical lock and key, and can be opened from inside the laboratory without a key. The facility and egress scheme meet NFPA 101 Life Safety Code.

3.7 Security Hazards

The TTR security system will guard against unauthorized personnel access to the TTR laboratory. In addition, the entrances on the north and the east into the TTR room and the west door into the Computer room will be secured when no one is present in the laboratory. These doors have a mechanical key-lock. Only authorized laboratory staff will be issued this key and the connecting workshop will have a digital keypad at its entrance. There is the roll-up door, on the east side on the TTR room, which can be opened only from the inside. This door will only be open when a number of the laboratory staff are present.

Thus, it is improbable that personnel can inadvertently enter this restricted area, or have damage result from a security lapse. In the event of a power failure, it is the responsibility of SSC Security Staff to restore laboratory security.

3.8 Environment Hazards

TTR will not produce ionizing radiation and therefore no special radiation shielding is required for the experiment. Any chemicals or toxic substances used during maintenance will be strictly monitored, handled, and tracked. All TTR aspects will be in accordance with applicable environmental local, state, and federal regulations, and laboratory environmental policy. The TTR will comply with the requirements of EPA and NFPA. It is SSC Laboratory policy to prevent, eliminate and control any environmental hazards.

3.9 Fire Hazards

Some of the experiments planned for the TTR include the use of ethane and isobutane gases (total flow of flammable gas will be less than 3 m^3 per day), in addition to several inert gases. Most normal operating pressures for the technologies are expected to be slightly above atmospheric. Some will be higher than 5 psig, 20 psig and, in the case of the laser experiment, may go to 150 psig. Mitigating action for the use of flammable gases include the use of metal tubing and hoses that meet code, storage of the gas cylinders on an outside pad, discharging all vent gases outside of the laboratory, the installation of gas leak detection sensors (alarming at the 10% and 20% LEL respectively), emergency fan ventilation, and the low volume of gases used in the TTR. An ENMET detection system has been installed as the primary gas leak detection system, and the system supplied by the University of Houston has been installed as a secondary means of detection.

The TTR Laboratory was unclassified per NFPA 70, National Electric Code, because of the above mitigating actions and the low likelihood that a flammable mixture would be present.

Emergency response procedures will be provided in accordance with the SSCL Emergency Response Plan.

Methodology to minimize fire hazards was incorporated in the TTR planning and design phases. Fire suppression equipment at the TTR conforms to NFPA requirements.

Normal building fire protection is an automatic wet sprinkler system. The water system is of adequate pressure and supply volume to meet NFPA requirements. Portable chemical extinguishers for suppressing class A, B, and C fires will be provided within the laboratory and at the gas bottle storage area.

3.10 Materials Handling Hazards

Potential for materials handling hazards is greater during maintenance and preparation activities than during the operational testing. OSHA regulations for material handling will be followed. Equipment damage and personnel hazards unique to TTR are those material handling activities related to moving of heavy tables and related heavy equipment. TTR personnel receive the greatest exposure to these potential hazards during equipment installation. Special considerations will be given to movement, installation and removal of the test components.

Gantry operators will be qualified through SSCL approved gantry training. Crane operating training shall be provided to all the operators or team leaders of the gantry. Due precautions and safeguards will be exercised to prevent damage to electrical buses, HVAC and gas lines in range of the gantry.

3.11 Radiation Hazards

There will be a low-level (micro-curie) radioactive source in use for the laser experiment. This source is used for calibration and testing of the various TTR technologies.

Radiation badges shall be issued and worn by all TTR personnel working in any area a radiation source is used. Proper warning signs and approved source storage practices shall be employed as appropriate.

3.12 Oxygen Deficiency Hazards

An Oxygen Deficiency Hazard (ODH) analysis has been performed. (See Appendix C) The low volume of gases being used (<750 cfm into the TTR room), coupled with the high ventilation rate (minimum of 6 air changes per hour) and the storage of the gases outside, gives the TTR laboratory an ODH rating of zero.

3.13 Mechanical Hazards

The presence of 150 psig pressure in the gas chamber for the laser experiment presents a potential mechanical hazard. Because the cross section diagonal of the chamber is less than six inches, it does not fall under the jurisdiction of ASME Section VIII, Divisions 1 or 2, the Boiler and Pressure Vessel code. It does not fall under ANSI B31 code series for pressure piping systems because the operating pressure does not exceed 150 psig. The chamber has been designed to handle pressures greater than 150 psig. It has been statically tested by the SSCL LTS Vacuum Group with a pressure of 150 psig and a vacuum of 1×10^{-7} atmospheres. The gas chamber has been identified with a serial number of KOLC 101 by the same group.

4.0 Potential Hazard Mitigation

The best hazard mitigation is safe system design. Design analyses were an important element in the identification and prevention of potential hazards. This SE identifies potential hazards, and it describes actions taken to reduce or mitigate those hazards which can be controlled through the system design, operation, and maintenance.

During the planning process the basic philosophy was:

* Design to minimize probable risk
* Provide warning devices
* Develop safety procedures and safety training
* Provide protective equipment.

4.1 Design Safeguards for Minimum Risk

During the TTR conceptual design phase; safeguards were put in place to control hazards. The design philosophy was that, if a potential hazard cannot be prevented or an identified hazard cannot be eliminated, then reduce the associated risk to an acceptable level as defined by DOE. The laboratory design follows applicable DOE and SSCL orders, codes, engineering standards, and safety design criteria.

Application of SSCL approved Engineering Standards and Guidelines is one factor contributing to safe designs. Reliability and safety requirements also influenced the design. Design standards, such as NEC, ASME, and ANSI are being prudently employed, along with OSHA and EPA rules, to ensure that systems are designed and constructed with inherent safety. This includes the control of hazardous energy as required by OSHA Standard CFR 1990.147 for any source of significant stored energy: electrical, mechanical, hydraulic, pneumatic, chemical or thermal. Important design considerations are documented below for three areas: electrical, cryogenic, and mechanical.

4.2 Electrical Design Safety

The control and instrumentation systems comply with DOE/EV-0051/1, Electrical Safety Criteria for Research and Development Activities, Exhibit E Instrumentation and Control Systems. Equipment and personnel safety was improved by the following design actions:

*Perform concept stage hazard analysis
*Shut down all electrical components of the TTR when a gas leak of greater than 20% LEL occurs.
*Isolate open voltage taps
*Follow electrical design standards, i.e. National Electric Code NFPA 70 and NFPA 79

*Comply with DOE 6430.1A, General Design Criteria, Section 16, Electrical System
*Follow DOE/EV-0051/1, Electrical Safety Criteria for R and D Activities
*Comply with ANSI / IEEE C-2, National Electrical Safety Code

Pre-operational laboratory acceptance testing will include:

*Verify electrical design integrity through testing of each technology prior to installation
*Verify software by simulations and preliminary tests
*Provide operational safety procedures

In addition are the continuing methods for electrical hazard mitigation during operations:

*Provide electrical safety training
*Operational testing prior to full system operation for each equipment addition
*Follow maintenance requirements including periodic calibrations

4.3 Mechanical Design Safety

Particular attention was placed on the design approach for mechanical items.

Hazards associated with the gantry and other auxiliary systems are mostly mechanical in nature, dealing with heavy loads, gas plumbing, rotating pumps, and ventilation fans. Procedures will be developed to protect the power supplies, electrical buses, and gas lines from damage, and to protect personnel from injury related to handling heavy objects. Structural and design analyses were performed on the TTR frame and the laser experiment's pressurized gas chamber.

4.4 Access Control and Hazardous Warning Devices

Access to the TTR laboratory will be strictly controlled. Visitors entering the area will be escorted. The SSCL staff escorts will be trained in safety requirements and familiar with the equipment and test operation of the laboratory.

4.5 Fire Protection

The most essential purpose of fire protection is life safety. TTR meets general SSCL design requirement for new buildings under applicable NFPA codes. Common sense rules play a large role in mitigating fire hazards. This means simply that isles must be kept clear, egress from the laboratory be easy and never be obstructed. Access to emergency shut-off switches must remain available. This is the real meaning of laboratory housekeeping.

Emergency response will be provided in accordance with the SSCL Emergency Response Plan. Operational fire hazard mitigation will include policies, programs

and procedures developed by ES&H Oversight and the Fire Protection Section of the ES&H Department. These will include programs to control normal operating hazards such as flammable/combustible liquids, smoking, portable heaters, system impairments, electrical hazards, and other fire hazards through scheduled and unscheduled inspections.

The ES&H Fire Protection Program provides for acceptance testing, as well as periodic inspection, testing and maintenance of all fire protection equipment. Acceptance testing of all Fire Protection equipment will be performed in accordance with applicable NFPA Standards and records shall be maintained. Periodic system and equipment inspection, testing and maintenance will be performed in accordance with approved GEM-TN-92-157, TTR Laboratory Maintenance Procedure. Response to a fire in the TTR Laboratory is detailed in GEM-TN-92-152, TTR Laboratory Emergency Procedures.

4.6 Operational Safety Procedures

As a safeguard, a policy has been established to minimize the number of unnecessary personnel in the laboratory while high current electrical power is applied. Other procedural mitigation of hazards is an important element in assuring an acceptable level of safety is achieved for the TTR. Procedures have been instituted for operation of the TTR, including safe work permits and the lockout / tagout requirements of DOE Order 5480.19, OSHA 29 CFR 1910.147, and the SSC ES&H Manual.

Appropriate operational safety policies, procedures, and programs shall be implemented prior to TTR operations. As of this writing, the TTR specific procedures included:

*GEM-TN-92-153, TTR Laboratory Start Up Procedure for Test Chambers
*GEM-TN-92-154, TTR Laboratory Purging Procedure for Test Chambers
*GEM-TN-92-155, TTR Laboratory Leak Check Procedure for Test Chambers
*GEM-TN-92-156, Laser Operational Procedure for the TTR Laboratory
*GEM-TN-92-157, TTR Laboratory Maintenance Procedure
*GEM-TN-92-158, Gas Emission Tracking Procedure for the TTR Laboratory
*GEM-TN-92-159, TTR Laboratory Shut Down Procedure for Test Chambers
*GEM-TN-92-160, TTR Laboratory Change Over Procedure for Test Chambers

4.7 Medical Certification for ODH

Employees assigned to work in the TTR do not need an ODH physical. Also, ODH monitors and alarms are not required with an ODH rating of zero for the TTR laboratory.

4.8 Safety Training

In addition to the ES&H training of all SSCL employees, the following training is required of employees assigned to the TTR:

*Lockout / tagout procedure
*Electrical / electronic shock hazards
*Crane and rigging training for crane operator leads
*Fire Extinguisher training
*TTR emergency procedures
*Lifting procedure
* Radiation Safety training
* Laser Safety training
* Compressed Gas safety training
* Swagelok fitting and valve installation and safety training

5.0 Emergency Preparedness

Emergency preparedness for the TTR will be done in accordance with Chapter 2, Section 1 of the SSC Environment, Safety, and Health Manual and the SSC Emergency Preparedness Plan.

Emergency Procedures for electrical, radiation, fire, and gas leak emergencies are detailed in GEM-TN-92-152, TTR Laboratory Emergency Procedures. All of these require the evacuation of personnel and the shut-down of the TTR via the Emergency Power Off (EPO) switches.

5.1 Protective Equipment

Personal protective equipment (helmets, steel toed shoes, safety glasses, safety belts, etc.) shall be provided as needed in accordance with OSHA and SSCL ES&H requirements. Due to the small size of the laboratory and close proximity of exits, 5-Minute Escape Packs or other breathing apparatus are not required.

Other hazard mitigation actions that will assure an acceptable level of safety for the TTR may from time to time require the use of personal safety items such : ear, eye, head, or foot protection to reduce the probability for injury.

5.2 Quality Assurance

Documentary evidence of quality and contract compliance gathered during the installation and testing of the power supplies and major components of the TTR Laboratory will be maintained by the individual(s) performing the work. Specifics are outlined in the operating procedures listed in Section 4.7 and can be made an entry in the appropriate test technology log book.

References

1. Environment, Safety & Health Manual, SSC Laboratory, (staff), SM/1/LC/lgr, dated 2/24/92

2. MEDL Safety Evaluation, Gene Cunningham, Aaron LaBasrge, and Frank Greer, MD-ENG-92-L-002, dated 3/6/92

3. Letter of concurrence to ODH Analysis (Appendix C), Mary Keen, dated 7/31/92

4. System Safety Engineering and Management, Harold E. Roland and Brian Moriarty, 2nd Edition, John Wiley & Sons, Inc., 1990

APPENDIX A HAZARD ANALYSIS

A.1 Methodology

A.1.1 Purpose

The purpose of this practice is to establish a uniform process for conducting the initial or "Conceptual" hazard analyses and risk assessments for Texas Test Rig (TTR). The hazard analysis process documents specific hazards, risks and mitigation actions (planned or implemented) to prevent or eliminate hazards. The hazard analyses also facilitates early identification of hazards allowing for hazard prevention, elimination, and/or control. Risk assessment and mitigation actions are products of a thorough hazard analysis and safety review process. A summary of the hazard analyses becomes an integral component of the Safety Evaluation.

Consistent with the DOE Safety Analysis and Review System, hazards which can cause death, injury, or occupational illness, or damage to facilities, systems, subsystems or equipment must be identified. Risks will be assessed, and mitigation actions taken to reduce hazards to acceptable risk levels. The hazard analysis addresses the adequacy of the preventive or mitigative design features and administrative controls provided to limit the probability of adverse occurrence or the severity of a hazard.

A.1.2 Conceptual Hazard Analysis Criteria and Guidelines

When evaluating hazards and determining adequate mitigation action, safety design and operational requirements were investigated by the design engineers. The following order of precedence for satisfying system safety requirements in the conceptual and technical selection process.

1) **Design for Minimum Risk.** From the first, design to eliminate hazards. If a hazard cannot be prevented or an identified hazard cannot be eliminated, reduce the associated risk to an acceptable level (as defined by DOE Orders)

2) **Incorporate Safety Systems and Safety Devices.** If the design cannot feasibly reduce risk to an acceptable level, provide the use of inherent safety systems and/or fixed, automatic protective safety design features or devices. Testability provisions shall be made for periodic functional checks of safety devices and safety systems when applicable.

3) **Provide Warning Devices.** When neither design, safety systems or safety devices can adequately reduce associated risk, devices shall be designed and used to detect the condition and to produce an adequate warning signal to alert personnel of the hazard and allow personnel to avoid hazards.

   Human factors considerations shall be included in the design schemes to prevent confusion and human errors. Warning

signals and their application shall be designed to minimize the probability of incorrect personnel reactions to the signals, alarms, cues, or other methods which shall be standardized between the different types of systems, whenever possible.

4) **Develop Safety Procedures and Safety Training.** Where it is impractical to adequately reduce the associated risk with safety and warning devices, or procedures, training shall be used. Technical and safety training shall be provided to cover all tasks which have been determined to be hazardous.

Considerations for training and procedures shall be validated and verified by working groups and safety committees. To provide inadequate training or to write procedures which are not followed or enforced will have negative results. Training must be thorough. Procedures must have a step-by-step checklist with the applicable precautions, warnings, and notes on operating limitation and emergency procedures. Procedures are to be clear and must be task-oriented. Procedures may include the use of personnel protective equipment. Special Safety procedures shall be written. Both Tasks and activities judged to be critical by DOE or PRD ES&H Management may require certification of personnel proficiency.

A.1.3 DOE Design Safety Criteria for Risk Reduction

Department of Energy Orders addressing ES&H and General Design Criteria are applicable to safety applications. When determining design safety criteria and requirements, the cognizant engineers use these and other required safety documents and engineering standards.

Many design standards and guidelines, such as applicable sections of ANSI, IEEE and ASME codes have safety related criteria. These will be evaluated to determine applicability to the TTR designs. Codes that are not directly applicable or suited to the specific technology of the TTR detector are being evaluated on a case-by-case basis to determine if the design criteria is applicable. Applicable criteria will be considered as requirements or guidelines in the areas of safety technology. Use of many specific engineering standards and commercial codes will help ensure that best engineering practices and safety design practices are followed.

A.1.4 Risk Assessment

The Risks Assessment Matrix and the Severity of Consequences, Figures A-1 & A-2, was provided to assist in the hazard analysis process. It is used to classify hazards by severity, frequency of occurrence, risk levels of acceptability or unacceptability. This matrix was used by the engineers when analyzing and assessing the risk of each identified hazard. Hazards which fall in the medium to high level of risk must be reduced to a low level of risk. In no cases are

unacceptable risks permitted. The matrix was designed in accordance with DOE 5481.1B and associated references.

A.1.5 Responsibilities

The SSC Laboratory ES&H Manual clearly spells out the safety policy of the Laboratory Director and the safety responsibility of Supervisors. The Associate Director of PRD is responsible for the design safety of detectors (hardware, software, personnel, procedures). The ES&H Oversight Office is responsible for ensuring compliance with DOE requirements. The ES&H System Safety Group is responsible for coordinating the safety hazard analysis and review effort and assisting in the development of methodologies and techniques required for development of the SE.

	A Frequent	B Probable	C Occasional	D Remote	E Improbable	F Impossible
1 Catastrophic						
2 Critical	1		2			
3 Marginal				3		
4 Negligible						

FIGURE A-1 RISK ASSESSMENT MATRIX

Severity of Consequences

	Descriptive Word	Personal Illness/ Injury	Equip-ment Loss(s)	Test Unit Downtime	Data Compromise	Environmental Effect
1	Catastrophic	Death	>500K	> 4 months	Data never recoverable or primary program objectives lost	Long-Term (5 yrs or greater) environmental damage or requiring $500K or more to correct and/or in penalties
2	Critical	Severe injury or severe occupational illness	100K to 500K	2 weeks to 4 months	Repeat of last program	Medium-term (1-5 yrs) environmental damage or requiring $100K-500K to correct and/or in penalties
3	Marginal	Minor injury or minor occupational illness	1K to 100K	1 day to 2 weeks	Repeat of last period	Short-term (less than 1 yr) environmental damage or requiring $1K-100K to correct and/or in penalties
4	Negligible	No injury or illness	< 1 K	< 1day	Repeat data point or data requires minor manipulation or computer rerun	Minor environmental damage that readily can be repaired or requiring less than $ 1K to correct and/or in penalties

Probability of Mishap

Level	Descriptive Word	Definition
A	Frequent	Likely to occur repeatedly
B	Probable	during life cycle of syst.
C	Occasional	Likely to occur several times in life cycle of syst.
D	Remote	Likely to occur sometime in life of system.
E	Improbable	Not likely to occur in life cycle of system.
F	Impossible	Possi. of occurrence cannot be distinguished from 0. Physically impossible to occur

Risk Zones

Code		Action
1	HIGH	Imperative to suppress risk to lower level
2	MEDIUM	Operations requires written, time waiver endorsed by Mgmt
3	LOW	Operation permissable

Note: PERSONNEL must not be exposed to hazards in Risk Zones 1 and 2

* Adapted from MIL-STD-882B

Figure A-2 Severity of Consequences

A.2 Hazard Data Worksheets

Specific hazards are summarized from the Hazard Data Worksheets provided. They are grouped according into several categories: electrical, fire/explosion, personnel and general. Results of the Hazard Data Worksheets are summarized in the Safety Evaluation sheets at the end of Appendix A.

A.3 TTR Hazard Summary

Results of the Hazard Data Worksheets are summarized in Table A-1.

TTR HAZARD SUMMARY

HAZARD CLASSIFICATION	TOTAL HAZARDS	Before Mitigation Actions RISK ZONES			After Mitigation Actions RISK ZONES		
		High	Med	Low	High	Med	Low
ELECTRICAL	5	0	5	0	0	0	5
GENERAL	12	0	11	1	0	0	12
PERSONNEL	22	2	18	2	0	0	22
FIRE/EXPLOSION	28	3	25	0	0	0	28
TOTAL	67	5	59	3	0	0	67

Table A-1 TTR Hazard Summary

ITEM	SYSTEM/UNIT	EVENT/PHASE	HAZARD DESCRIPTION	RISK	RECOMMENDED ACTION	RISK	REMARKS/STATUS
EL 1	Texas Test Rig (TTR) Magnet Coil	During operation	Personnel contact with high amperage magnet power supply.	I D Risk: 2	Coil and power supply leads are insulated / isolated. Coil cable connections will be insulated.	I E Risk: 3	Single event hazard, however, millivolts involved puts the current close to the threshold of perception (per AFSC DH 1-6) and will not cause a shock hazard. Closed by TTR Safety Evaluation Review Team.
EL 2	Texas Test Rig(TTR) Cabling	During operation - lines are energized	Electrical shock due to insulation degradation (chafing, rodents, heat, etc.)	I D Risk: 2	Ensure proper installation of all cabling. Periodic inspection of cabling.	I E Risk: 3	Multiple event hazard: Exposed wiring must go unnoticed (no shorts or breaks in operating system); power must be at a hazardous level; personnel must be exposed to this hazard with power on. Closed by TTR Safety Evaluation Review Team.
EL 3	Texas Test Rig (TTR) Emergency Power Off (EPO)	Operational.	EPO fails to cut power off during an emergency.	I D Risk: 2	Check installation for fail safe feature; Functional test of EPO; demonstrate fail safe feature; Periodic testing of EPO.	I E Risk: 3	Multiple event hazard: Emergency must exist and EPO must be inoperable. Closed to the TTR hazard tracking system: TTR #01.
EL 4	Texas Test Rig (TTR) Electrical Equipment	Operational.	Water intrusion into electric equipment resulting in shock or electrical shorting hazard.	I D Risk: 2	Verify seal of roof vent; Maintain roof integrity; Identify / resolve any roof leaks prior to TTR operation.	I E Risk: 3	Multiple event hazard Operation of TTR shall be prohibited when/if water intrusion is detected. Closed by TTR Safety Evaluation Review Team.

ITEM	SYSTEM/UNIT	EVENT/PHASE	HAZARD DESCRIPTION	RISK	RECOMMENDED ACTION	RISK	REMARKS/STATUS
EL 5	Texas Test Rig (TTR) Fire Extinguishing / Sprinklers	Operational.	Shock / short circuit hazard due to the inadvertent activation of the sprinkler system.	I D Risk: 2	Procedures to hit EPO during this situation; Cease further testing & safely shut down system.	I E Risk: 3	Multiple event hazard. Closed by TTR Safety Evaluation Review Team.
FE 1	Texas Test Rig (TTR)	All phases of operation	Fire from improper handling, storage or disposal of flammable materials	I D Risk: 2	Labeled approved flammable liquid storage cabinet and flammable waste disposal cans will be in place, personnel will be instructed as to the proper handling, storage and disposal of flammables. No smoking signs, restricted access to room, sprinklers and fire extinguishers.	I E Risk: 3	Multiple event hazard. Quantity of flammables in room will be restricted. Closed by TTR Safety Evaluation Review Team.
FE 2	Texas Test Rig (TTR)	All phases of operation	Fire	I D Risk: 2	Room is sprinklered. Number of fire extinguishers exceeds code. Flammable gas leak detection (at 10% & 20% of the LEL) and emergency ventilation provided. Ordinary combustibles will be kept to a minimum.	I E Risk: 3	Gas fires will be eliminated through all other mitigating actions (i.e. leak detection, venting). Closed to the TTR hazard tracking system: TTR #02 and TTR #14.
FE 3	Texas Test Rig (TTR) Gas cylinders	During maintenance	Gas leak from line fitting near ignition source.	I D Risk: 2	Initial and Periodic inspections will be conducted to ensure line integrity. Use Swagelok fittings to allow gaging to verify proper installation.	I E Risk: 3	Multiple event hazard: gas leak must exceed LEL; gas leak must go unmitigated; an ignition source must be in the area of LEL gas leak. Closed by TTR Safety Evaluation Review Team.

ITEM	SYSTEM/UNIT	EVENT/PHASE	HAZARD DESCRIPTION	RISK	RECOMMENDED ACTION	RISK	REMARKS/STATUS
FE 4	Texas Test Rig (TTR) Gas system Gas regulator	During operation	Over pressurization and failure of gas system due to gas creepage from a failure of gas regulator.	I C Risk: 1	Install two-stage tied diaphragm gas pressure regulator in gas distribution system. Regular inspection to ensure integrity of regulators. Pressure relief valve installed	I E Risk: 3	Multiple event hazard: gas leak must exceed LEL; gas leak must go unmitigated; an ignition source must be in the area of LEL gas leak. Closed by TTR Safety Evaluation Review Team.
FE 5	Texas Test Rig (TTR) Gas distribution system	During operation	Fire or explosion due to backflow of gas through system introducing oxygen into system.	II C Risk: 2	Backflow check valves will prevent gas from flowing back towards supply. Periodic inspections will verify that integrity is maintained in check valves and gas lines.	II D Risk: 3	Multiple event hazard. Closed by TTR Safety Evaluation Review Team.
FE 6	Texas Test Rig (TTR) Chamber fittings	Operational	Explosion / ignition of gas released due to multiple chamber fitting leaks.	I D Risk: 2	Minimize the number of fittings; Leak check system upon installation; Leak check system upon any maintenance action; Perform periodic leak checks.	I E Risk: 3	Multiple event hazard: System must be using a flammable gas, leak(s) must be large enough to accumulate the Lower Explosion Limit, leak(s) must remain undetected & without mitigation, and an ignition source must be present. Closed by TTR Safety Evaluation Review Team.
FE 7	Texas Test Rig (TTR) Gas venting	Operational.	Explosion / ignition of gas in the vent line.	I D Risk: 2	Vent line shall be sized to accommodate maximum anticipated flow of gases; Vent line must have a minimum number of bends, maximize bend radiuses, be free of dents; vent lines should be located to minimize the probability of contact with personnel / machinery; vent line shall be 15 ft. away from electrical equipment and other potential ignition sources	I E Risk: 3	Multiple event hazard: gas leak must exceed LEL; gas leak must go unmitigated; an ignition source must be in the area of LEL gas leak. Closed to the TTR hazard tracking system: TTR #06.

ITEM	SYSTEM/UNIT	EVENT/PHASE	HAZARD DESCRIPTION	RISK	RECOMMENDED ACTION	RISK	REMARKS/STATUS
FE 8	Texas Test Rig (TTR) Gas Detection System	Operational.	Explosion / ignition of gas accumulation due to operational failure of sensors.	I D Risk: 2	Sensors are to be tested upon installation, after maintenance action, and during periodic inspections.	I E Risk: 3	Multiple event hazard: System must be using a flammable gas, leak(s) must be large enough to accumulate to accumulate the Lower Explosion Limit, leak(s) must remain undetected & without mitigation, and an ignition source must be present. Closed by TTR Safety Evaluation Review Team.
FE 9	Texas Test Rig (TTR) Gas Detection System	Operational.	Explosion / ignition of gas accumulation due to sensors with a higher sensitivity than the LEL being installed.	I D Risk: 2	Proper sizing of sensor; Inspection of parts actually installed; Sensor identification be made part of the periodic inspection checklist.	I E Risk: 3	Multiple event hazard: System must be using a flammable gas, leak(s) must be large enough to accumulate the Lower Explosion Limit, leak(s) must remain undetected & without mitigation, and and ignition source must be present. Closed by TTR Safety Evaluation Review Team.
FE 10	Texas Test Rig (TTR) Gas Distribution System	Operational.	Explosion / ignition of gas due to leak from impact / puncture of gas lines / panels.	I D Risk: 2	Restrict heavy equipment from area; Lines routed to minimize exposure; Provide barricades as needed; Restrict traffic during operation of TTR.	I E Risk: 3	Multiple event hazard: leak(s) must exceed the Lower Explosion Limit; it must remain undetected & without mitigation; and an ignition source must be present. Closed by TTR Safety Evaluation Review Team.
FE 11	Texas Test Rig (TTR) Gas Distribution System	Operational.	Explosion / ignition of gas due to leak from vibration / chaffing / loosening of fittings on gas lines.	I D Risk: 2	Leak check system upon installation; Leak check system upon any maintenance action; Perform periodic leak checks; Avoid stressing copper tubing.	I E Risk: 3	Multiple event hazard: System must be using a flammable gas, leak(s) must be large enough to accumulate the Lower Explosion Limit, leak(s) must remain undetected & without mitigation, and an ignition source must be present. Closed by TTR Safety Evaluation Review Team.

ITEM	SYSTEM/UNIT	EVENT/PHASE	HAZARD DESCRIPTION	RISK	RECOMMENDED ACTION	RISK	REMARKS/STATUS
FE 12	Texas Test Rig (TTR) Gas Distribution System	Operational.	Explosion / ignition of gas released due to failures / leaks induced by personnel using the gas lines as a step, hand-hold, etc.	I D Risk: 2	Route lines to avoid contact with personnel; Where contact with personnel cannot be avoided, route through appropriately sized conduit or provide a shield; Leak check system upon installation; Leak check system upon any maintenance action; Perform periodic leak checks.	I E Risk: 3	Multiple event hazard: System must be using a flammable gas, leak(s) must be large enough to accumulate the Lower Explosion Limit, leak(s) must remain undetected & without mitigation, and an ignition source must be present. Closed by TTR Safety Evaluation Review Team.
FE 13	Texas Test Rig (TTR) Laser Experiment Quartz Container	Operational.	Explosion / ignition of isobutane released from quartz container in the laser experiment.	I D Risk: 2	Leak check container / fittings; Chamber will be pressure tested to maximum anticipated pressure.	I E Risk: 3	Chamber has been pressure and vacuum tested by SSCL Vacuum Group, Certificate # 4892A. Single event hazard. Closed to the TTR hazard tracking system: TTR #03.
FE 14	Texas Test Rig (TTR) Gas Distribution System Regulator	Operational	Explosion / ignition of gas released due to regulator failure.	I D Risk: 2	Leak check system upon installation; Leak check system upon any maintenance action; Perform periodic leak checks; Regulators are designed for flammable gases and meet CGA standards.	I E Risk: 3	Multiple event hazard: System must be using a flammable gas, leak(s) must be large enough to accumulate the Lower Explosion Limit, leak(s) must remain undetected & without mitigation, and an ignition source must be present. Closed by TTR Safety Evaluation Review Team.
FE 15	Texas Test Rig (TTR) Muon Chamber	Operational.	Explosion / ignition of flammable gas resulting from improper / inadequate evacuation of oxygen prior to injecting flammable gas.	I D Risk: 2	Purge system with nitrogen prior to injection of flammable gas; Train personnel in proper procedures for system activation / purging. Include proper purging as a standard operating procedure.	I E Risk: 3	Closed by TTR Safety Evaluation Review Team.

ITEM	SYSTEM/UNIT	EVENT/PHASE	HAZARD DESCRIPTION	RISK	RECOMMENDED ACTION	RISK	REMARKS/STATUS
FE 16	Texas Test Rig (TTR) Gas Distribution System	Operational	Explosion / ignition of gas released due to overpressurization of system.	I D Risk: 2	Install a high flow indicator; Install high pressure shut-off switch; Personnel to be trained in emergency procedures; Key components to be inspected during periodic inspections. Install pressure relief valves.	I E Risk: 3	Multiple event hazard: System must be using a flammable gas, leak(s) must be large enough to accumulate the Lower Explosion Limit, leak(s) must remain undetected & without mitigation, and an ignition source must be present. Closed by TTR Safety Evaluation Review Team.
FE 17	Texas Test Rig (TTR) Gas Distribution System	Operational.	Explosion / ignition of gas resulting from improper tank (oxidizer, acetylene, etc.) accidentally installed.	I D Risk: 2	Tanks are labeled; Fittings used are sized and color coded to prevent connection of non-category tanks; Lines are inspected / verified during installation. Use a different size line to prevent misconnecting at the manifold. Lines are to be marked per ANSI 13.1.	I E Risk: 3	Hazard can occur only if an oxidizer or a more volatile gas is connected. This is improbable due to the use of required tank fittings. Closed to the TTR hazard tracking system: TTR #04 and TTR #19.
FE 18	Texas Test Rig (TTR) Explosion Venting.	Operational.	Excessive pressure build-up to explosion / ignition of flammable gas.	I D Risk: 2	Room volume is large enough to allow for pressure dissipation	I E Risk: 3	Multiple event hazard: System must be using a flammable gas, leak(s) must be large enough to accumulate the Lower Explosion Limit, leak(s) must remain undetected & without mitigation, and an ignition source must be present. Closed by TTR Safety Evaluation Review Team.
FE 19	Texas Test Rig (TTR) Laser Experiment Laser Chamber	Operational.	Explosion / ignition of gas released from laser chamber.	I D Risk: 2	Verify adequacy of chamber; Control access to Laser Experiment area; Separate Laser Experiment from rest of TTR.	I E Risk: 3	Chamber has been pressure tested to 150 psig, Certificate # 4892A. Closed to the TTR hazard tracking system: TTR #03.

ITEM	SYSTEM/UNIT	EVENT/PHASE	HAZARD DESCRIPTION	RISK	RECOMMENDED ACTION	RISK	REMARKS/STATUS
FE 20	Texas Test Rig (TTR) Gas Distribution System	Operational.	Explosion / ignition of gas resulting from the introduction of oxygen into the line at the inert gas cylinder due to tank not being connected or a massive leak.	I B Risk: 1	Leak check system prior to activation.	I E Risk: 3	Closed by TTR Safety Evaluation Review Team.
FE 21	Texas Test Rig (TTR) Fire extinguishing	Operational.	Fire detection method does not detect fire.	I D Risk: 2	Verify presence of sprinklers in TTR and clean room. Install smoke detectors as required.	I E Risk: 3	Multiple event hazard: System must be using a flammable gas, leak(s) must be large enough to accumulate the Lower Explosion Limit, leak(s) must remain undetected & without mitigation, and an ignition source must be present. Closed to the TTR hazard tracking system: TTR #20.
FE 22	Texas Test Rig (TTR) Gas supply systems / gas chambers	During operation and maintenance	Static electricity discharge ignites gas leak.	I D Risk: 2	Major metal framing and components will be properly bonded and grounded to eliminate electric potential. Bonding and emergency vent fan installation completed during construction. Leak detection will be installed before operation.	I E Risk: 3	Multiple event hazard: leak(s) must exceed the LEL; it must remain undetected & without mitigation; & an ignition source must be present. All fittings, tubing and frame and metal and are bonded (exceeds requirements of NFPA 58). Closed to the TTR hazard tracking system: TTR #08 and TTR #15
FE 24	Texas Test Rig (TTR) Emergency Fan Exhaust Motor	TTR / emergency ventilation / fan motor	Fire caused by motor arc in presence of flammable gas leak	I D Risk: 2	Exhaust fan has been remoted from the TTR structure. When a gas leak is detected (at 10% & 20% of the LEL), the fan starts automatically, gas flow shuts off and room ventilation also stays on. Gas sensors will be strategically located to optimize coverage. The concentration of gas in air will be diluted before it can reach the exhaust fan motor. Room volume will assist in dilution.	I E Risk: 3	Multiple event hazard: gas leak must exceed LEL; gas leak must go unmitigated; an ignition source must be in the area of LEL gas leak. Closed by TTR Safety Evaluation Review Team.

ITEM	SYSTEM/UNIT	EVENT/PHASE	HAZARD DESCRIPTION	RISK	RECOMMENDED ACTION	RISK	REMARKS/STATUS
FE 25	Texas Test Rig (TTR) Electrical panels	During operation	Fire due to arc at panel igniting flammable gas mixture.	I D Risk: 2	Electrical panels are remote from gas system. Panels have locks to keep out all but necessary maintenance personnel. Normal room airflow will minimize the probability of getting an LEL mixture.	I E Risk: 3	Multiple event hazard: gas leak must exceed LEL; gas leak must go unmitigated; an ignition source must be in the area of LEL gas leak. Closed by TTR Safety Evaluation Review Team.
FE 26	Texas Test Rig (TTR)	During operation	Fire hazard. Improper grounding could cause difference in potential between metal objects. Difference in electrical potential could act as ignition source in presence of flammable gas that is within flammable limits.	I C Risk: 1	Properly bond and ground all framing members and other metal components of TTR. Flammable gas leak detection and ventilation will keep flammable mixtures from escaping to ignition sources.	I E Risk: 3	Closed to the TTR hazard tracking system: TTR #08.
FE 27	Texas Test Rig (TTR) Iarocci Chamber	Operational	Explosion / ignition of gas released due to chamber leaks.	I D Risk: 2	Leak check chambers upon installation; Leak check chambers upon any related maintenance action; Perform periodic leak checks.	I E Risk: 3	Multiple event hazard: Leak(s) must be large enough to accumulate the Lower Explosion Limit, leak(s) must remain undetected & without mitigation, and an ignition source must be present. Closed by TTR Safety Evaluation Review Team.
FE 28	Texas Test Rig (TTR) Electronic Cabinets "Muffin" Fans	During operation	Fire ignition sources - electrical arc at "muffin " fans ignites gas leak	I D Risk: 2	Provide minimum airflow. Minimum of 6 changes of air per hour will be provided. Hard wire on air conditioning units fan to run continuously. Provide warning horn if unit is turned off.	I E Risk: 3	Multiple event hazard: gas leak must exceed LEL; gas leak must go unmitigated; an ignition source must be in the area of LEL gas leak. Closed by TTR Safety Evaluation Review Team.

ITEM	SYSTEM/UNIT	EVENT/PHASE	HAZARD DESCRIPTION	RISK	RECOMMENDED ACTION	RISK	REMARKS/STATUS
FE 29	Texas Test Rig (TTR) Vacuum Pump	During operation	Vacuum pump introduces oxygen into vent lines and is ignited.	II C Risk: 2	Purge vent line with nitrogen; vent discharge to be 15 ft. away from ignition sources; ignition sources to be 15 ft. away from vacuum pump. Vacuum pump acts as a check valve to prevent back flow from ambient.	II D Risk: 3	Multiple event hazard: gas must be between MEL and LEL; oxygen must be introduced; ignition source must be present Closed to the TTR hazard tracking system: TTR #06.
GN 1	Texas Test Rig (TTR) Gas storage area Gas cylinders	During operation	Use of unauthorized gases, hazardous gases. Carbon arcing degrades chamber integrity.	II D Risk: 3	Gas pad will be fenced with locking gate "Authorized Personnel Only " sign to exclude unauthorized entry. Procedures will call for only type- verified gases to be connected to TTR experiment.	II E Risk: 3	Single event hazard. Keyed CGA connections will exclude cross connection of gases. Closed by TTR Safety Evaluation Review Team.
GN 2	Texas Test Rig (TTR) Gas storage pad	All phases of operation	Collision with gas pad (automobile, forklift etc.) causes release of gas and / or mechanical damage.	I D Risk: 2	Gas pad is 12" to 36" above grade of parking lot, providing an effective barrier against collision; Gas cylinders are located 10 to 16 feet from drive; All cylinders will be properly stored in racks with securing chains.	I E Risk: 3	Multiple event hazard. Closed by TTR Safety Evaluation Review Team.
GN 3	Texas Test Rig (TTR) Gas storage pad	All phases of operation	High temperature causes internal pressure of gases exceed structural integrity of container.	II C Risk: 2	Provide shade for gas cylinder storage; Use only DOT rated cylinders for gases.	II E Risk: 3	Storage complies with NFPA 58. Closed by TTR Safety Evaluation Review Team.

ITEM	SYSTEM/UNIT	EVENT/PHASE	HAZARD DESCRIPTION	RISK	RECOMMENDED ACTION	RISK	REMARKS/STATUS
GN 4	Texas Texas Rig (TTR)	Maintenance	Periodic leak checking and routine maintenance not performed allowing degradation of system.	II C Risk: 2	Procedures will call for a maintenance log to be kept on all maintenance performed on the TTR systems. Inspections of maintenance will ensure that proper work is done.	II D Risk: 3	A maintenance log will eliminate unnecessary work, reduce hazards and keep hazardous conditions from recurring. Closed to the TTR hazard tracking system: TTR #13.
GN 5	Texas Test Rig(TTR) Gas venting	Operational.	Adverse environmental impact of vented gases.	III A Risk: 2	Amount of vented gases to be less than amount of gases authorized by Texas Department of Air Quality; The amount of gas used from tanks and will be monitored / documented.	III C Risk: 3	Closed to the TTR hazard tracking system: TTR #17.
GN 6	Texas Test Rig (TTR) Fork Lift	Operational / Maintenance	Exhaust from fork lift triggers gas detection system.	III B Risk: 2	Minimize use of forklift operation at the TTR; Provide maximum ventilation in area. TTR will use gantry for future lifting and installation of technologies.	III C Risk: 3	Closed by TTR Safety Evaluation Review Team.
GN 7	Texas Test Rig (TTR)	Operational	Unauthorized activation of TTR equipment.	II C Risk: 2	Control access to the TTR; Power select / activation should be keyed; Keys should have limited distribution.	II D Risk: 3	Closed by TTR Safety Evaluation Review Team.

ITEM	SYSTEM/UNIT	EVENT/PHASE	HAZARD DESCRIPTION	RISK	RECOMMENDED ACTION	RISK	REMARKS/STATUS
GN 8	Texas Test Rig (TTR)	Operational.	Operational hazards due to inadequate lighting.	III B Risk: 2	Room illumination should be at least 50 ft-candles 3 ft off floor; Maintenance to replace light bulbs expediently; Provide emergency lighting	III D Risk: 3	Closed by TTR Safety Evaluation Review Team.
GN 9	Texas Test Rig (TTR)	Operational.	Fire egress from main building causes personnel to egress through test facility during testing.	I D Risk: 2	Procedures to cease TTR testing when main building alarm is activated; Control access to room; Remove Exit signs over door; Testing light to be activated during testing. During a fire evacuation of Building 4, TTR personnel will shut down TTR and evacuate the building per TTR emergency procedures.	I E Risk: 3	Multiple event hazard: Fire must occur in main building, egress to be made through TTR room, and testing with TTR continues. Closed to the TTR hazard tracking system: TTR #16.
GN 10	Texas Test Rig (TTR)	Operational.	Wall penetrations accelerate / spread fire.	I D Risk: 2	Openings / holes in fire rated walls to be restored to the original condition; Wall penetrations to be kept to a minimum.	I E Risk: 3	Multiple event hazard: leak(s) must exceed the Lower Explosion Limit; it must remain undetected & without mitigation; an ignition source must be present; and holes in the walls accelerated / aids the spread of fire. Closed to the TTR hazard tracking system: TTR #21.
GN 11	Texas Test Rig (TTR)	Operational.	Hazards associated with hazardous waste.	II C Risk: 2	Hazardous waste containers to be provided in the test area; Personnel trained in proper disposal procedures; Limit access to storage areas containing hazardous waste.	II D Risk: 3	Closed by TTR Safety Evaluation Review Team.

ITEM	SYSTEM/UNIT	EVENT/PHASE	HAZARD DESCRIPTION	RISK	RECOMMENDED ACTION	RISK	REMARKS/STATUS
GN 12	Texas Test Rig (TTR) Computer Room Computers	Operational.	Electromagnetic interference adversely affects the computers in the computer room.	III B Risk: 2	Test magnet for magnet strength; Locate computers as far away from the magnet as possible. Install individual monitor shielding as required.	III E Risk: 3	Test magnet for magnet strength demonstrated maximum magnetic field at the wall to be 5 gauss. Closed by TTR Safety Evaluation Review Team.
PH 1	Texas Test Rig (TTR) Gas Supply System	During operation and maintenance	Oxygen Deficiency Hazard due to gas leak.	I D Risk: 2	Perform an ODH analysis	I E Risk: 3	TTR room has an ODH rating of zero. Closed by TTR Safety Evaluation Review Team.
PH 2	Texas Test Rig (TTR) Magnet	During operation and maintenance	Static magnetic field eddy current could cause ferrous - metallic object transportation.	III B Risk: 2	Field strength has been measured and practically tested. Measurements show that the strength is low enough not to be a hazard to employees (below ACGIH TLV). Physical barricade will be in place during operation of magnet	III E Risk: 3	Practical test showed that nominal field could not transport metallic objects. Physical barricade will be in place Closed by TTR Safety Evaluation Review Team.
PH 3	Texas Test Rig (TTR) Gas distribution system Gas piping	All phases of operation	Personnel using gas lines as support or foothold.	II B Risk: 1	Gas lines will be run within support trays. Trays are clearly marked "Not to be used as foothold." Procedures will call for personnel to use ladders or scaffolding for working around gas distribution lines.	II D Risk: 3	Single event hazard. Closed by TTR Safety Evaluation Review Team.

ITEM	SYSTEM/UNIT	EVENT/PHASE	HAZARD DESCRIPTION	RISK	RECOMMENDED ACTION	RISK	REMARKS/STATUS
PH 4	Texas Test Rig (TTR) Experimental gases	During operation and maintenance.	Toxicity of gases.	I D Risk: 2	Gas leak detection will give sufficient warning of leaking gases. All normal venting will be outside of the TTR. ODH rating is zero (minimal risk).	I E Risk: 3	Narcosis from isobutane (800 ppm) is improbable (requires failure of all the following: dual stage regulator, high flow transmitter, high pressure shutoff and pressure relief valve (and both gas leak detection systems)). Closed by TTR Safety Evaluation Review Team.
PH 5	Texas Test Rig (TTR) Emergency Exhaust Fan	Operational / Maintenance	Rotating blade of emergency and muffin fans and associated hazards.	II C Risk: 2	Guards and screens are installed; fan is used for emergencies only.	II D Risk: 3	Multiple event hazard: Requires personnel to be in area of fan during its operation with the screens / guards removed. Closed to the TTR hazard tracking system: TTR #09.
PH 6	Texas Test Rig (TTR) Gas Distribution System	Operational.	Cylinder tip-over / falling on personnel.	III A Risk: 2	Provide cylinder racks; Protective cap will remain on cylinder until gas cylinder is secured; Chain cylinders to racks/wall; Personnel to wear steel toed shoes when working with cylinders. Require compressed gas cylinder handling training.	III C Risk: 3	Closed by TTR Safety Evaluation Review Team.
PH 7	Texas Test Rig (TTR) Gas Distribution System	Operational.	Explosion / ignition of gas due to breakage / loss of fitting due to impact of fitting.	I D Risk: 2	Provide cylinder racks; Chain cylinders to racks; Store cylinders in limited access / protected area. Require compressed gas cylinder handling training.	I E Risk: 3	Closed by TTR Safety Evaluation Review Team.

ITEM	SYSTEM/UNIT	EVENT/PHASE	HAZARD DESCRIPTION	RISK	RECOMMENDED ACTION	RISK	REMARKS/STATUS
PH 8	Texas Test Rig (TTR) Gas Distribution System	Operational.	Weight of full cylinder exceeds one-man lift.	III B Risk: 2	SOPs for General Laboratory require two-man lift for cylinders; Provide procedures / training of personnel	III C Risk: 3	Closed by TTR Safety Evaluation Review Team.
PH 9	Texas Test Rig (TTR) Room	Operational.	Excessive noise level.	II D Risk: 3	Survey to document noise level; Control access to area; Hazardous areas will be marked / barricaded; Provide ear plugs / muffs as required.	II E Risk: 3	No high noise generating equipment / machinery is anticipated for TTR. Closed to the TTR hazard tracking system: TTR #22.
PH 10	Texas Test Rig (TTR)	Operational	Vibration hazards to personnel.	II D Risk: 3	TTR equipment is located on a semi-isolated pad; Personnel will not be on equipment during operation. No moving components anticipated.	II E Risk: 3	Closed by TTR Safety Evaluation Review Team.
PH 11	Texas Test Rig (TTR) Fork lifts	Operational / maintenance	Fork lift runs into personnel / equipment.	I D Risk: 2	Minimize use of fork lifts; Provide a spotter while installing equipment; Require Fork lift Operator's Certification; Provide guards rails; Provide barricade; Control access of personnel during equipment installation.	I E Risk: 3	Closed by TTR Safety Evaluation Review Team.

ITEM	SYSTEM/UNIT	EVENT/PHASE	HAZARD DESCRIPTION	RISK	RECOMMENDED ACTION	RISK	REMARKS/STATUS
PH 12	Texas Test Rig (TTR) Electrical Panels / Fixtures	Operational.	Cut / abrasions caused by sharp corners / burrs on panels / equipment.	III B Risk: 2	Corners radiused; Edges deburred; Nicks to be blended to a safe radius; Gloves to be worn during the maintenance / handling of sheet metal / sharp hardware.	III C Risk: 3	Closed by TTR Safety Evaluation Review Team.
PH 13	Texas Test Rig (TTR) Laser Experiment	Operational.	Eye hazards associated with laser radiation.	II C Risk: 2	Experiment should be 3B Class; Provide eye protection as necessary; enclose beam; Control access to area; Provide warning signs.	II D Risk: 3	Closed to the TTR hazard tracking system: TTR #07.
PH 14	Texas Test Rig (TTR)	Operational.	Slipping on smooth floor.	III B Risk: 2	Spills to be cleaned up quickly & completely; Partitioned off and identify wet areas.	III C Risk: 3	Closed by TTR Safety Evaluation Review Team.
PH 15	Texas Test Rig (TTR) Fire Extinguishing System	Operational.	Emergency egress inadequate for safe egress of personnel.	I D Risk: 2	Housekeeping must maintain a hazard-free environment; All aisles to maintain 44 inch minimum width; Control number of personnel in TTR during operation; Have appropriate signs and exits from TTR area.	I E Risk: 3	Multiple event hazard: leak(s) must exceed the Lower Explosion Limit; it must remain undetected & without mitigation; an ignition source must be present; and egress of personnel must be blocked or inadequate. Closed to the TTR hazard tracking system: TTR #05 and TTR #18.

ITEM	SYSTEM/UNIT	EVENT/PHASE	HAZARD DESCRIPTION	RISK	RECOMMENDED ACTION	RISK	REMARKS/STATUS
PH 16	Texas Test Rig (TTR) TTR room	Operation and maintenance on TTR	Falling hazard (personnel and objects)	I D Risk: 2	OSHA - approved scaffolding with toeboards provided. Walk-up safety ladders also provided. Safety belts with lanyards shall be used for work at heights > 6 ft. Objects at heights > 6 ft. shall be secured to the scaffolding. Tools used at heights > 6 ft. shall be secured in tool belts. Outriggers to be used above 6 ft.	I E Risk: 3	Scaffolding, safety ladder and safety belts will minimize personnel falls. Toeboards are to be used to minimize falling objects. Closed by TTR Safety Evaluation Review Team.
PH 17	Texas Test Rig (TTR)	All phases of operation	ODH due to smoldering fire	I D Risk: 2	Procedures will keep transportable ordinary combustibles to a minimum. Good housekeeping procedures will be in place and enforced. Emergency procedures require shut down of TTR and evacuation of the area.	I E Risk: 3	Multiple event hazard. The primary fire hazard in the TTR room is from gas, which does not produce copious amounts of toxic by-products when it burns Closed by TTR Safety Evaluation Review Team.
PH 18	Texas Test Rig (TTR) Gas system	During operation	Gas migration into adjacent working areas, causing ODH hazard.	I D Risk: 2	Leak detection will prevent gas spread. Automatic ventilation will start up, and automatic shut-off will stop gas flow in emergency. The volume of the room lends itself to dilution of gas mixtures.	I E Risk: 3	Multiple event hazard. TTR room has an ODH rating of zero. Closed by TTR Safety Evaluation Review Team.
PH 19	Texas Test Rig (TTR) Gas System	Operation	ODH due to improper shut down of gas system during emergency.	I B Risk: 1	Procedures will direct personnel how to safely shut down gas system during emergency. Automatic power off buttons will be in place to shut off TTR electricity and gas flow. Automatic ventilation will eliminate any escaping gas in room.	I E Risk: 3	TTR laboratory has an ODH rating of zero. Closed by TTR Safety Evaluation Review Team.

ITEM	SYSTEM/UNIT	EVENT/PHASE	HAZARD DESCRIPTION	RISK	RECOMMENDED ACTION	RISK	REMARKS/STATUS
PH 20	Texas Test Rig (TTR) Experimental Test	During Test and Calibration	Radiation Exposure from microCurie gamma sources	III B Risk: 2	Sources will be controlled by a trained individual, and kept within a locked cabinet. Signs will be properly placed when sources are being used. Radiation dosimeter will be used.	III D Risk: 3	Single event hazard, although low-level strength of source precludes excessive exposure. Closed by TTR Safety Evaluation Review Team.
PH 21	Texas Test Rig (TTR) Magnet	Operation and maintenance	Magnetic field interferes with pacemaker operation	I D Risk: 2	Provide personnel authorized to enter the TTR Lab with medical screening for pacemaker use, as well as surgical implants, sutures, and metal prostheses. Post warning signs on external doors and on TTR frame. Provide physical barricade around the TTR, at the 10-15 gauss boundary.	I E Risk: 3	Multiple event hazard. Pacemaker wearer would have to ignore Warning signs & barricade and remain proximate to the operating Magnet for a period of time. Final design will contain recommended action. Closed to the TTR hazard tracking system: TTR #11 and TTR #12.
PH 22	Texas Test Rig (TTR)	Maintenance; Installation	Dropping equipment from gantry hits personnel or ground	I D Risk: 2	Gantry safety training or a lift team leader who is certified, shall be mandatory for operation of gantry; Loading shall not exceed strap/chain/hoist capacity; straps/chains/hoists shall have periodic certification; All loads shall be secured; Hard hats and steel toed shoes are required during lifts	I E Risk: 3	Closed by TTR Safety Evaluation Review Team.

Appendix B Definitions

Accident - A mistake, error, unusual occurrence or event having safety implications, or leading to an unsafe condition or event. (see Mishap)

Effect on System - The detrimental effects inflicted on the system or personnel.

Effects of Recommended Action - The effects of the action in lowering risk.

Hazard - Any existing or potential condition that can result in a mishap or accident.

Hazard Description - A brief description of the hazard and cause.

Hazard Severity - A qualitative assessment of the worst potential consequence, defined by the degree of injury, occupational illness, property damage, and/or equipment damage/effects.

Hazard Probability - The likelihood that a hazard will occur.

Hazard Tracking and Risk Resolution System - A method of ensuring severe hazards/risks are documented, tracked, communicated and resolved in a timely manner.

Mishap - An unplanned event or series of events that result in death, injury, occupational illness, or damage to or loss of equipment or property. (see "accident")

Mitigating Action - The action required to eliminate or control the hazard.

Recommended Action - The action required to eliminate or control the hazard.

Remarks - Any relevant comments relating to the hazard.

Risk - A quantitative or qualitative expression of possible loss in

terms of hazard severity and hazard probability that a hazard will cause harm and the consequences of that event.

Risk Assessment - An evaluation of the hazard severity and probability and the determination of acceptability/unacceptability based upon mitigation actions to reduce risks.

Risk Zone - A classification of low, medium or high risk: 1 is high and unacceptable; 2 requires management evaluation, decisions, approval; 3 is low and is acceptable risk)

Safety Evaluation (SE) - A comprehensive safety assessment. A documented process to systematically identify systems and operational hazards, to describe and analyze the adequacy of the measures taken to eliminate, control, or mitigate identified hazards, and evaluate potential mishaps and their associated risks. SARs identify hazards, assess risks and means for their elimination and control, and document the approval for various stages of facility design, construction and operation.

Status - Status of actions to implement the recommended, or other, hazard controls.

System Safety - The systematic application of proven engineering and management processes to optimize safety within the constraints of operational effectiveness, time, and cost throughout all phases on the system life cycle.

System Event(s) Phase - Phase of operation (maintenance, testing, beam on, all, *etc.*).

System/Subsystem/Unit - The particular part of the system that is analyzed.

Appendix B Acronyms

ACGIH	Amer. Conf. of Gov. Industrial Hygienists
ADC	Amplitude Digital Convertor
ANSI	American National Standards Institute
ASME	American Society of Mechanical Engineers
CAMAC	Computer Assisted Measurement and Control
cfm	Cubic Feet per Minute
CFR	Code of Federal Regulations
cm	Centimeter
DAQ	Data Acquisition System
DOE	Department of Energy
DOT	Department of Transportation
EPA	Environmental Protection Act
EPO	Emergency Power Off
ES&H	Environmental, Safety & Health
GeV	Giga electron volt
GEM	Gamma, Electron, Muon Detector
HVAC	Heating, Ventilation, Air Conditioning
Hz	Hertz
IEEE	Institute of Electrical & Electronic Engineers
J	Joules
l	Liter
LEL	Lower Explosion Limit
LTS	Laboratory Technical Services
m	Meter
MEL	Maximum Explosion Limit
NEC	National Electric Code
NFPA	National Fire Protection Association
ODH	Oxygen Deficiency Hazard
OSHA	Occupational Safety and Health Admin.
PRD	Physics Research Division
psig	Pounds per square inch, gage
QA	Quality Assurance
R&D	Research and Development
SE	Safety Evaluation
SOP	Standard Operating Procedure
SSC	Superconducting Super Collider
SSCL	Superconducting Super Collider Laboratory
T	Tesla
TDC	Time Digital Convertor
TLV	Threshold Limit Value
TTR	Texas Test Rig
UL	Underwriters Laboratories
UBC	Uniform Building Code
URA	Universities Research Association
UV	Ultra-violet
V	Volt

APPENDIX C OXYGEN DEFICIENCY ANALYSIS

C.1 Introduction

This analysis evaluates the Oxygen Deficiency Hazard (ODH) Classification of the Texas Test Rig Laboratory located in the south end of Building 4 at the Stoneridge Complex of the SSCL. This analysis complies with the SSC ES&H Manual's ODH Policy (11-2).

C.2 Building Data

Building floor area for TTR = 78 ft X 40 ft = 3120 sq. ft.
Inside height = 26 ft
Building Volume = 3120 X 26 = 81120 cubic ft.

C.3 Oxygen Level from Static Gas Sources

The following is a table of the flow rates of the gases used in the different technologies that are part of the TTR.

TECHNOLOGY	TYPE OF GASES	EQUIVALENT GAS VOLUME AT 1 atm, 70F	GAS FLOW AT 1 atm, 70F
CSC1	25% ARGON/ 75%ISOBUTANE	400 liters	800 liters/day
LSTD	25% ARGON/ 75%ISOBUTANE	700 l.	500 l/d
CSC2	30% CF4/ 70% CO2	40 l.	120 l/d
RPC	58% ARGON/ 38%n-BUTANE 4% FREON	500 l.	500 l/d
PDT	25% ARGON/ 75%ISOBUTANE	2800 l.	2000 l/d
	NITROGEN	8490 l.	500 l/d
TOTAL VOLUME OF GASES		12930 l.	4420 l/d

Table C-1 TTR Gas Flow Rates

This portion of the analysis looks at the various technologies. Not all technologies will be operating simultaneously, so the overall analysis is conservative.

Assuming that there is a break or a rupture in one of the technologies, the contents will not be "dumped" into the TTR lab. The result will be introducing the normal flow rate for that technology directly into the room. An example of the highest flow rate (worst case event):

$C = [21\%/(Q+R)]Q$, where
C = oxygen concentration
R = volume of gas released = 2000 liters/day =.05 cfm
Q = ventilation rate = 8000 cfm (minimum) with 10% new air

$C = [21\%/(800+.05)]800 = 20.99\%$

The results of the oxygen level and the corresponding fatality factors for each of the technologies is given in Table C-2.

C.4 Oxygen Level from Dynamic Gas Sources

There are several cylinders external to the TTR laboratory that feed pressurized gases into the area. Most deliveries are normally at pressures slightly above atmospheric.

There are ten 1/4" copper lines, supplied by individual gas cylinders. Worst case scenario (though improbable) would be that the regulators allowed full cylinder pressure (assuming a full tank) and the contents were exhausted into the TTR Laboratory through a rupture/break. Per the SSCL ES&H handbook, the rate of occurrence for a break/rupture in a gas line (metal < 3") is 1×10^{-9} failures per hour. (The probability of each of the dual stage regulators failing completely open and the pressure relief valves failing to relieve full pressure was not included. This makes the TTR ODH analysis more conservative.)

An example of the highest flow rate (worst case event):

$C = [21\%/(Q+R)]Q$, where
C = oxygen concentration
R = volume of gas released = 108 cfm
Q = ventilation rate = 8000 cfm (minimum) with 10% new air

$C = [21\%/(800+108)]800 = 18.5\%$

Using the curve (from the SSCL ES&H Safety Manual, 11-2) for fatality factor versus partial pressure of oxygen, the $F_i = 6.5 \times 10^{-7}$ fatalities per event.

The maximum flows, failure rates, the resulting oxygen level and the corresponding fatality factors for each of the technologies is given in Table C-2.

C.5 Oxygen Level for the Clean Room - Worst Case

Nitrogen is supplied into the clean room through a 1/4" copper line. Assuming that the regulators allowed full cylinder pressure (assuming a full tank) and the contents were exhausted into the clean room:

Nitrogen = 108 cfm X 2 cylinder = 108.0 cfm

$C = [21\%/(Q+R)]Q$, where C = oxygen concentration
R = cfm of gas released = 108 cubic ft
Q = ventilation rate = 1200 cfm (minimum)

$C = [21\%/(1200+108)]1200 = 19.3\%$

Using the curve (from the SSCL ES&H Safety Manual, 11-2) for fatality factor versus partial pressure of oxygen, the $F_i = 1.7 \times 10^{-7}$ fatalities per event.

The maximum flows, failure rates, the resulting oxygen level and the corresponding fatality factors for each of the technologies is given in Table C-2.

C.6 ODH Classification

The ODH classification is based on the oxygen deficiency hazard fatality rate defined by:

$$\Phi = \sum nP_i F_i$$

where n = number of like items
Φ = ODH fatality rate (per hour)
P_i = expected rate of occurrence of the ith event (per hour)
F_i = fatality factor for the ith event (per hour)

Note: If the oxygen level does not go below 19.5 %, then $F_i = 0$
If the oxygen level goes below 8.8 %, then $F_i = 1$

The maximum flows, failure rates, the resulting oxygen level and the corresponding fatality factors for each of the technologies are given in Table C-2. The result of the analysis is that the TTR Laboratory has an ODH rating of zero since the fatality rate is well below 10^{-7} fatalities per hour.

	TYPE OF GAS	N	FAILURE RATE (RUPTURE/BREAK)	FLOW RATE (CFM)	% O2	FATALITY FACTOR	FATALITY RATE	ODH CLASS
CYLINDERS	CO2	1	1×10^{-9}/HR	48.3	19.8	0	0	0
	CF4	1	1×10^{-9}/HR	53.1	19.7	0	0	0
	Ar	2	1×10^{-9}/HR	74.3	19.2	2×10^{-7}/HR	4×10^{-16}/HR	0
	N2	3	1×10^{-9}/HR	108	18.5	7×10^{-7}/HR	2.1×10^{-15}/HR	0
	BUTANE	2	1×10^{-9}/HR	5.8	20.8	0	0	0
	ISOBUTANE	1	1×10^{-9}/HR	5.8	20.8	0	0	0
	ETHANE	1	1×10^{-9}/HR	47.2	19.8	0	0	0
CLEAN ROOM	N2	1	1×10^{-9}/HR	108	19.2	2×10^{-7}/HR	2×10^{-16}/HR	0
TECHNOLOGY CHAMBERS	CSC1	1	1×10^{-9}/HR	.020	21.0	0	0	0
	LSTD	96	1×10^{-9}/HR	.012	21.0	0	0	0
	CSC2	1	1×10^{-9}/HR	.003	21.0	0	0	0
	RPC	1	1×10^{-9}/HR	.012	21.0	0	0	0
	PDT	1	1×10^{-9}/HR	.050	21.0	0	0	0
	N2	1	1×10^{-9}/HR	.012	21.0	0	0	0
TOTALS							2.7×10^{-15}/HR	0

Table C-2 TTR ODH Summary Table

Appendix D TTR Magnetic Readings

A simple test for determining the strength of the external magnetic field generated by the TTR magnet was conducted. Readings were taken using a F. W. Bell Series 9900 Gaussmeter at various locations on and around the magnet. Readings were taken at the normal operating current of 70 amps and also at the maximum of 120 amps. Results are illustrated in Figures D-1 through D-3.

This test demonstrates that there is no high magnetic hazard from the TTR magnet. It does, however, demonstrate the need for a pacemaker warning placard for the TTR Laboratory.

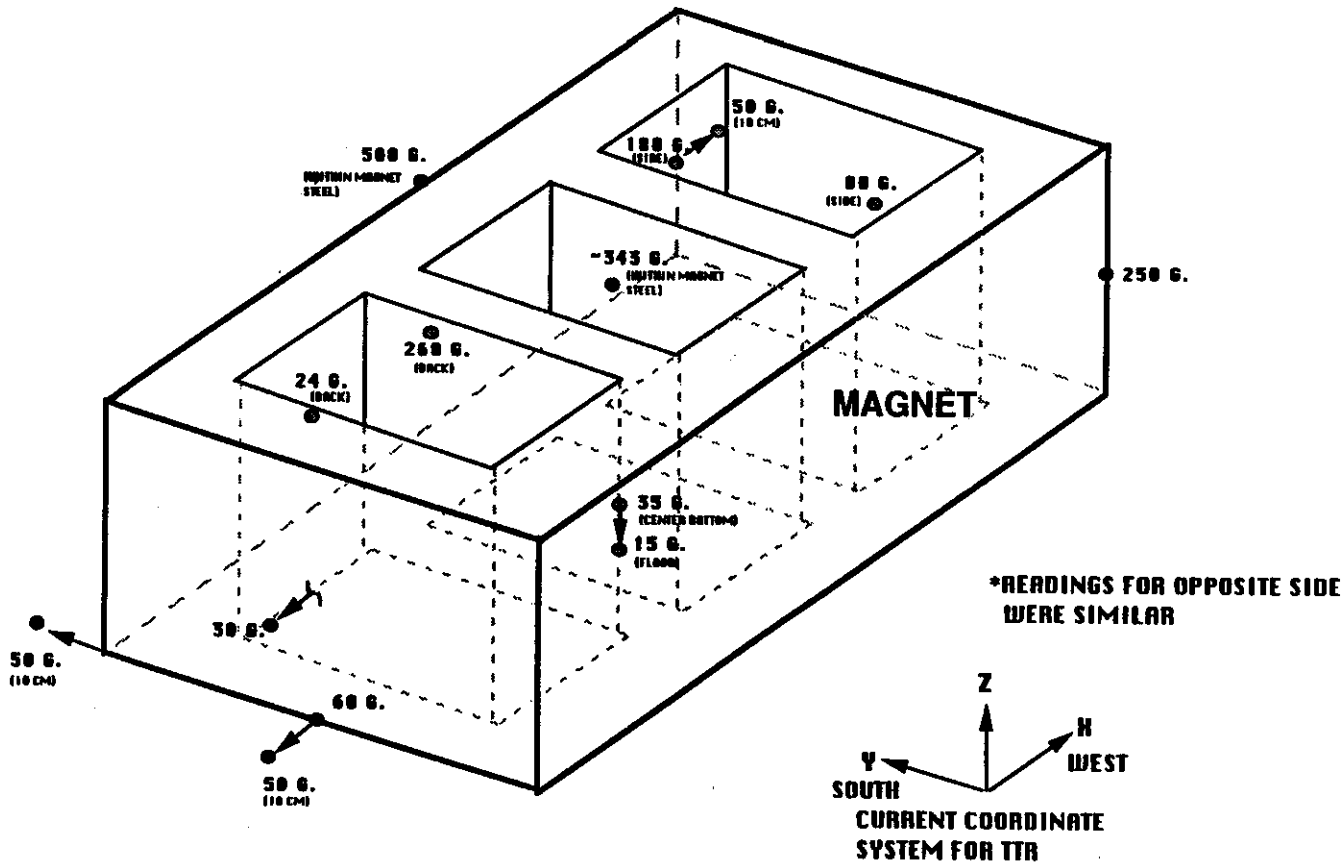

Figure D-1 TTR Magnetic Readings at 70 Amps

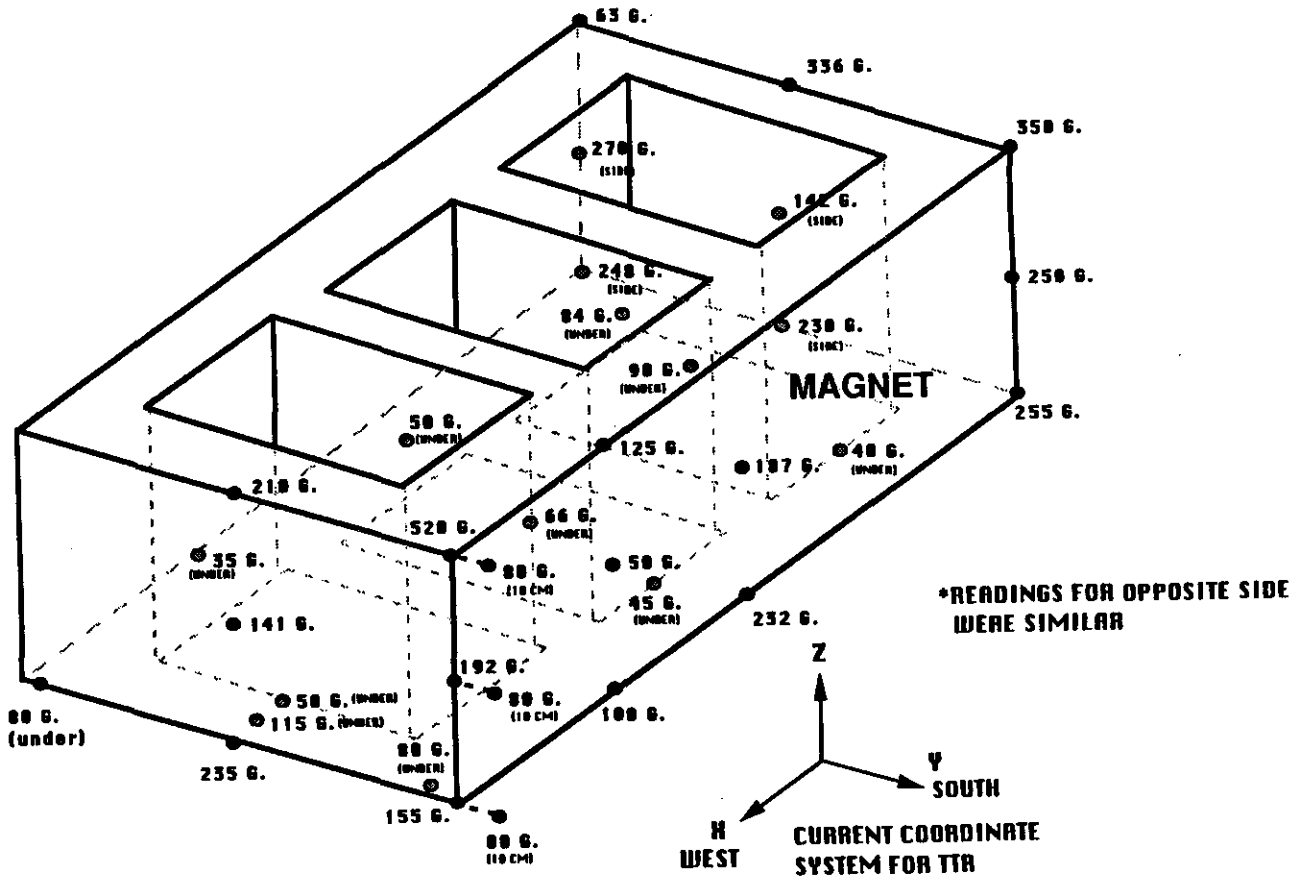

Figure D-2 TTR Magnet Readings at 120 Amps

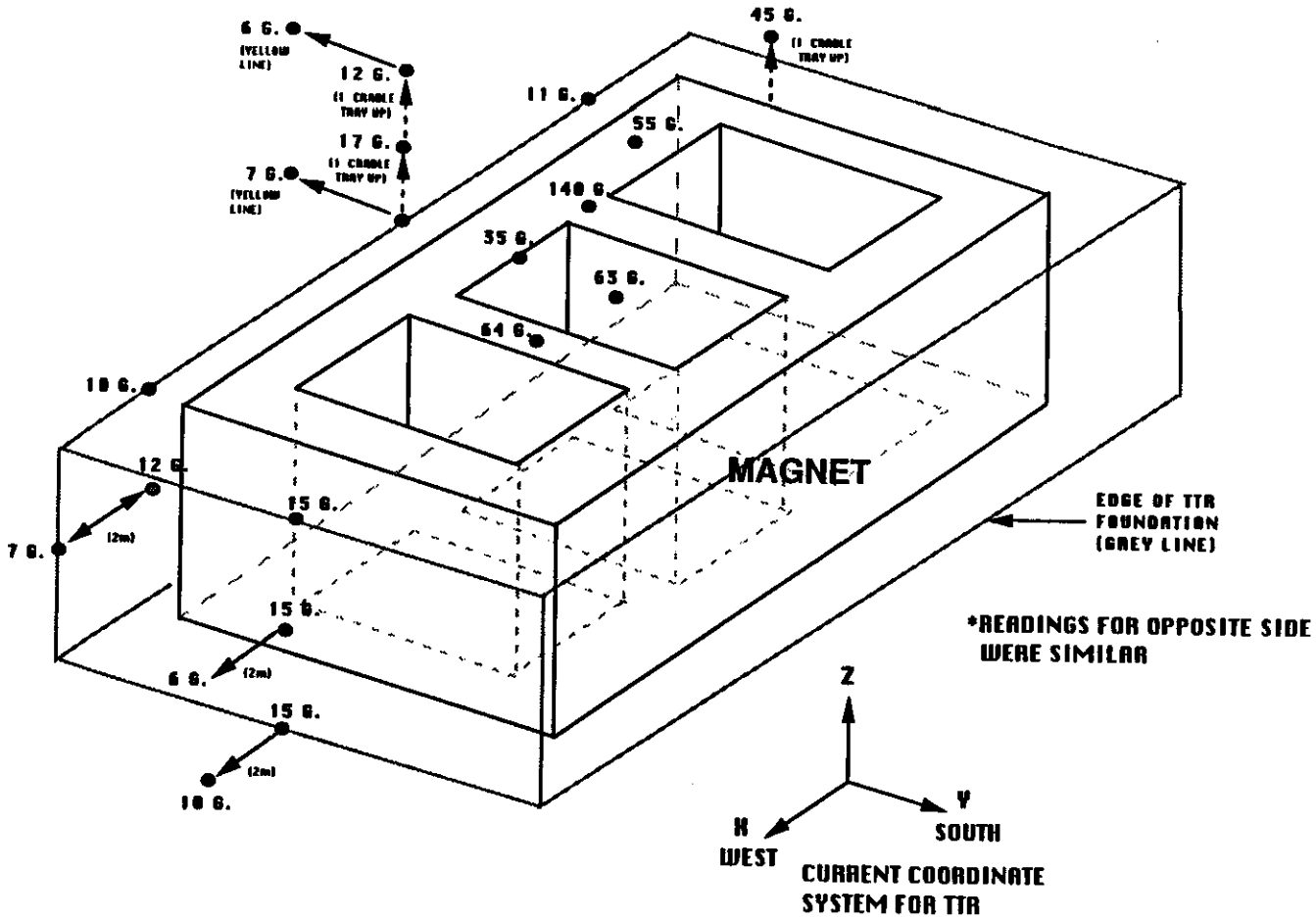

Figure D-3 TTR Magnet Perimeter Readings at 120 Amps