GEM TN-92-145

Magnet Subsystem August Subcontractor Information Meeting - SSCL

August 18, 1992

Abstract:

Agenda and presentations of the GEM Magnet Subsystem Subcontractor Information Meeting held at the SSC Laboratory on August 18, 1992. Agenda items included: GEM and GEM Magnet Project Update; Technical Update Information; Facility Design Update; Cryostat and Support System Design Update; Cold Mass Design Update; Fabrication Plan Outline; Business/Procurement Status Update; and Summary and Closing Remarks.

Superconducting Super Collider

GEM Magnet Subsystem August Subcontractor Information Meeting

Superconducting Super Collider Laboratory

18 August, 1992

Agenda

Gem Magnet
August Subcontractor Information Meeting
18 August, 1992

Superconducting Supercollider Laboratory

1:00	GEM and GEM Magnet Project Update	Paul Reardon
1:25	Technical Update Introduction	Gary Deis
1:40	Facility Design Update	Tom Prosapio
2:20	Cryostat and Support System Design Update	Lawrence Pedrotti Robert Yamamoto
3:00	Break	
3:10	Cold Mass Design Update	Bradford Smith
3:50	Fabrication Plan Outline	Robert Johnson
4:30	Business/Procurement Status Update	Richard Fischer Bill Davis
4:50	Summary and Closing Remarks	Paul Reardon
5:00	Adjourn	

Rev D - 8/17/92

Superconducting Super Collider

GEM and GEM Magnet Project Update

Paul Reardon,
GEM Magnet Project Manager

SSC Laboratory
18 August, 1992

GEM Magnet Subcontractor Information Meeting

Overview

- Welcome
- Appreciation for continuing support
- Expectations for Congressional Action
- Status of GEM Magnet approval
  - PAC
  - Cost estimate review
  - Technical design review
  - Management Review
  - Contract Review Board
- Meeting Agenda

Superconducting Super Collider

Technical Update Introduction

Gary Deis
GEM Magnet Deputy Project Manager

18 August, 1992

Objectives of this talk

- Tell you (briefly) where we are in the technical design

  Next speakers will provide additional details on various aspects of the design

- Respond to some of the questions/comments you sent us

We have been proceeding on the design since April

- The major emphasis has been on writing the Technical Design Report and on preparing for technical reviews
- R&D activity on conductor and winding has begun
- Title 1 Facility design has progressed, though the expected Title 1 design report has not yet been produced.
- We have updated facility requirements in preparation for Title 2 design. Overall schedule impact is projected to be minimal.
- Numerous questions/comments were received from industry and considered. Most TBD's were eliminated. Updated DRAFT Specification available for your information/comment
- Decisions have been made on Government-Furnished Equipment

We received 65 technical comments/questions on the Draft RFP

There were 6 dominant themes, which accounted for roughly half of these comments

- Facilities - specific comments, requests for more detail
- Conductor - requests for more design, performance details
- Winding - comments on selection of approach
- ASME Code - questions on exact requirements
- Use of SI system - concern over impact of this requirement
- Installation/alignment - questions of responsibility

Conductor comments

The questions and comments fell into two main areas: quench behavior and conductor qualification

- Quench behavior - depends on assumptions on heat transfer, bobbin design, etc
  - The design intent is to limit the hot spot temperature to less than 100 K, with modest dump voltage (1 kV), and reasonable detection delay (1 sec)
  - A conservative quench calculation gives a maximum helium pressure in the conductor of 445 atm

- Conductor qualification
  - The conductor will be terminated, inspected, and cold-leak tested at the manufacturer
  - We now intend to make the prime contractor responsible for management of the conductor subcontract
  - Comments on other qualification tests are welcomed

Winding comments

Two areas of concern

- What are the latest design details?
  - Brad Smith (MIT) will discuss this in the following talk
  - See also the GEM Magnet Technical Design Report

- How much input will the contractor have in the design of the process and tooling?
  - We want to maximize contractor input
  - The overall schedule requires that we begin winding process and tooling development now
  - We are working on plans to involve the contractor in the trial winding
  - Final design of winding tooling will be the contractor's responsibility (and the first critical activity)

Comments on use of ASME Code and SI units

- We will develop detailed requirements for use of ASME Code as the design progresses.

  - Our intent is <u>design</u> all applicable components to Code requirements
  - Since Code-stamp is not required, we will select the fabrication/inspection requirements which we feel are needed for each application, and eliminate much of the documentation

- The SSC is required to adhere to the use of SI units

  - Designs must be in SI (drawings, config control, etc)
  - Machinery and tooling are not required to be SI, but the final products must meet the SI design

Installation/alignment comments

- Equipment for lowering the magnet components into the underground hall will be provided by SSCL/GEM, since other GEM subsystems will also use this equipment
  - This means the "general-purpose crane" or equivalent
  - The magnet contractor will be required to:
    - work with SSCL/GEM to develop the "crane" requirements
    - provide any tooling required only for the magnet subsystem assembly and installation
- GEM global alignment technical requirements are still being developed
- The contractor will be responsible for initial alignment of the magnet, with beamline location supplied by SSCL. Subsequent alignments will be the responsibility of SSCL

We greatly appreciate your comments!

- We considered each and every comment, and many improvements have been made to the Specification, RFP, and SOW as a result

- Please continue to comment on these documents as you feel appropriate. We are anxious to understand your concerns and we want to ensure our overall success!

Superconducting Super Collider

Facility Design Update

Tom Prosapio
Experimental Facilties Division

Superconducting Super Collider Laboratory
18 August, 1992

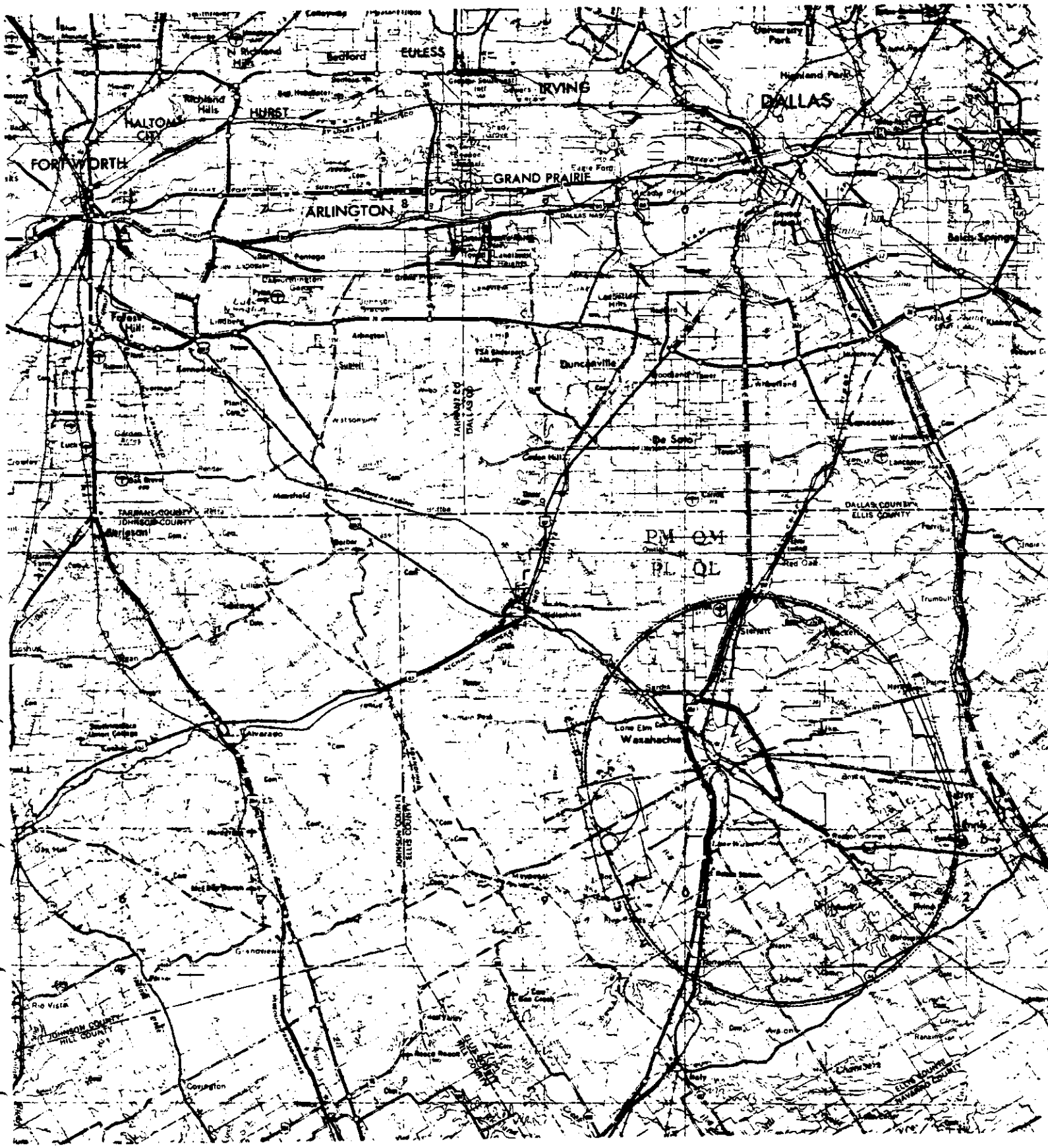

EULESS
Bedford
IRVING
DALLAS
Highland Park
Richland Hills
HALTOM CITY
HURST
FORT WORTH
GRAND PRAIRIE
ARLINGTON
Balch Springs
Duncanville
De Soto
Lancaster
Waxahachie
Alvarado
Grandview
Rio Vista
Covington
TARRANT CO
DALLAS CO
TARRANT COUNTY
JOHNSON COUNTY
DALLAS COUNTY
ELLIS COUNTY
JOHNSON COUNTY
ELLIS COUNTY
JOHNSON COUNTY
HILL COUNTY
ELLIS COUNTY
NAVARRO COUNTY
PM QM
PL QL

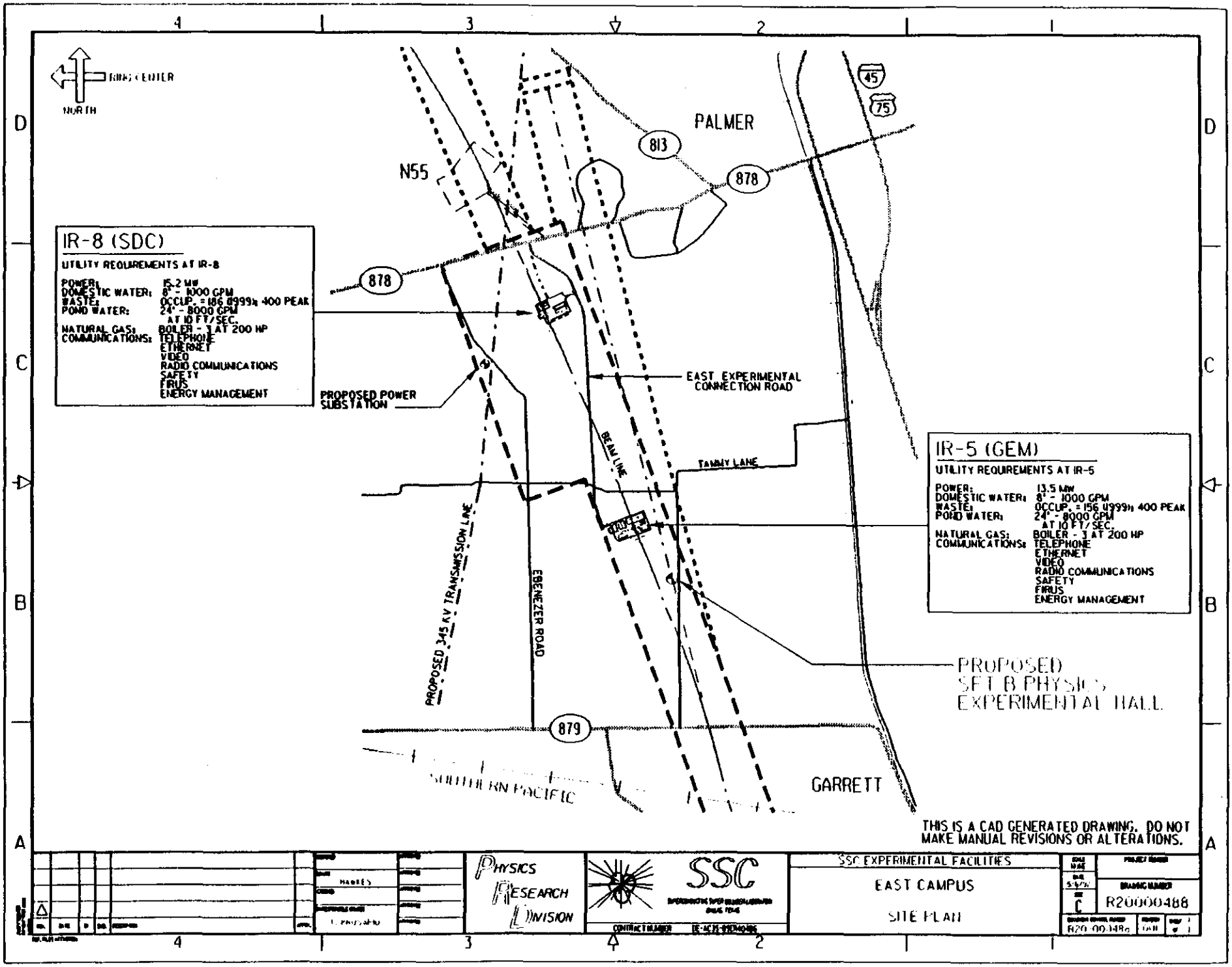
RING CENTER
NORTH
PALMER
N55
813
878
45
75
IR-8 (SDC)
UTILITY REQUIREMENTS AT IR-8
POWER: 15.2 MW
DOMESTIC WATER: 8" - 1000 GPM
WASTE: OCCUP. = 186 (999) + 400 PEAK
POND WATER: 24" - 8000 GPM AT 10 FT/SEC.
NATURAL GAS: BOILER - 1 AT 200 HP
COMMUNICATIONS: TELEPHONE
ETHERNET
VIDEO
RADIO COMMUNICATIONS
SAFETY
FIRUS
ENERGY MANAGEMENT
PROPOSED POWER SUBSTATION
EAST EXPERIMENTAL CONNECTION ROAD
BEAM LINE
TAMMY LANE
IR-5 (GEM)
UTILITY REQUIREMENTS AT IR-5
POWER: 13.5 MW
DOMESTIC WATER: 8" - 1000 GPM
WASTE: OCCUP. = 156 (999) + 400 PEAK
POND WATER: 24" - 8000 GPM AT 10 FT/SEC.
NATURAL GAS: BOILER - 3 AT 200 HP
COMMUNICATIONS: TELEPHONE
ETHERNET
VIDEO
RADIO COMMUNICATIONS
SAFETY
FIRUS
ENERGY MANAGEMENT
PROPOSED 345 KV TRANSMISSION LINE
EBENEZER ROAD
PROPOSED SFT B PHYSICS EXPERIMENTAL HALL
879
SOUTHERN PACIFIC
GARRETT
THIS IS A CAD GENERATED DRAWING. DO NOT MAKE MANUAL REVISIONS OR ALTERATIONS.
PHYSICS RESEARCH DIVISION
SSC
SSC EXPERIMENTAL FACILITIES
EAST CAMPUS
SITE PLAN
R20000488

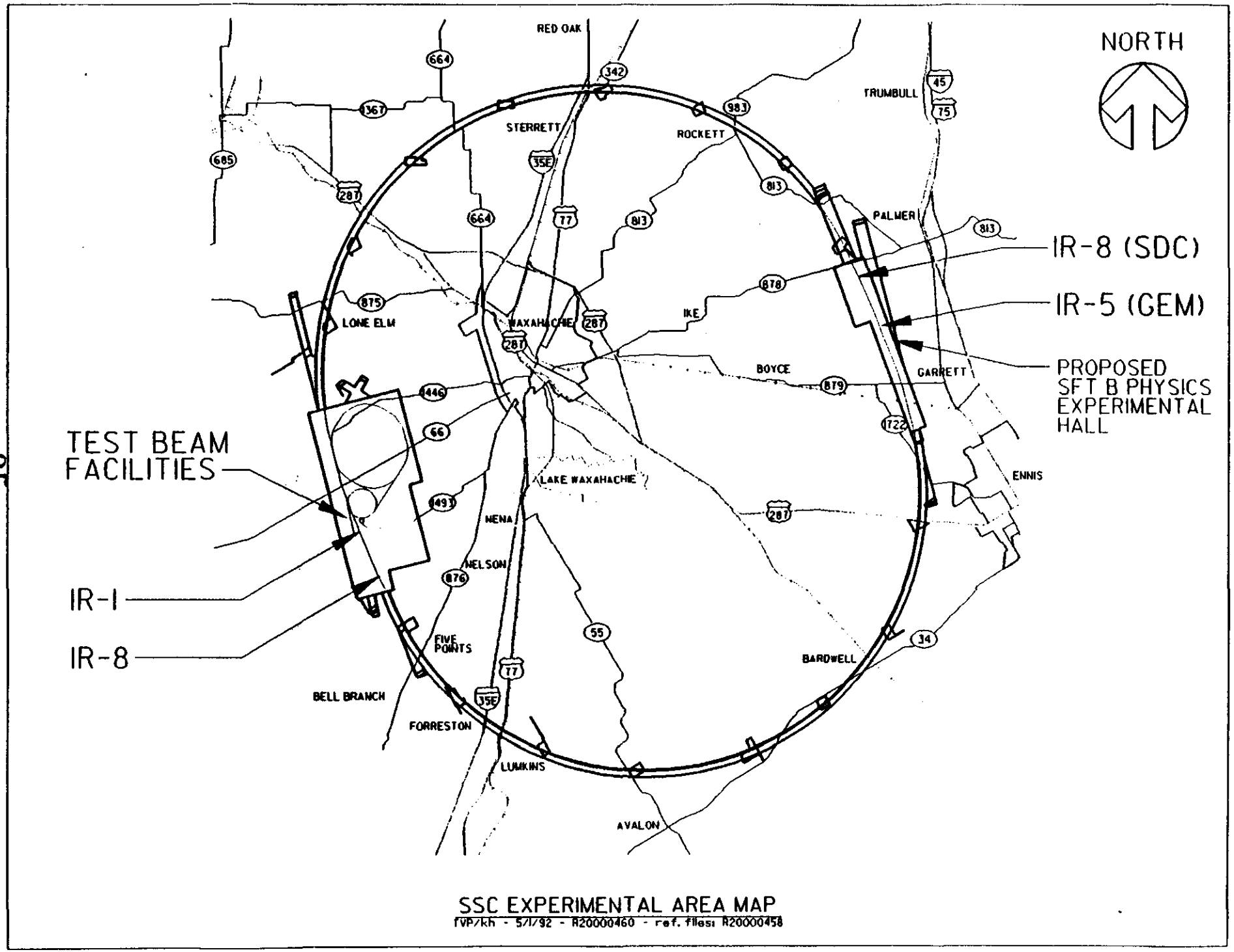

SSC EXPERIMENTAL AREA MAP
fVP/kh - 5/1/92 - R20000460 - ref. files: R20000458

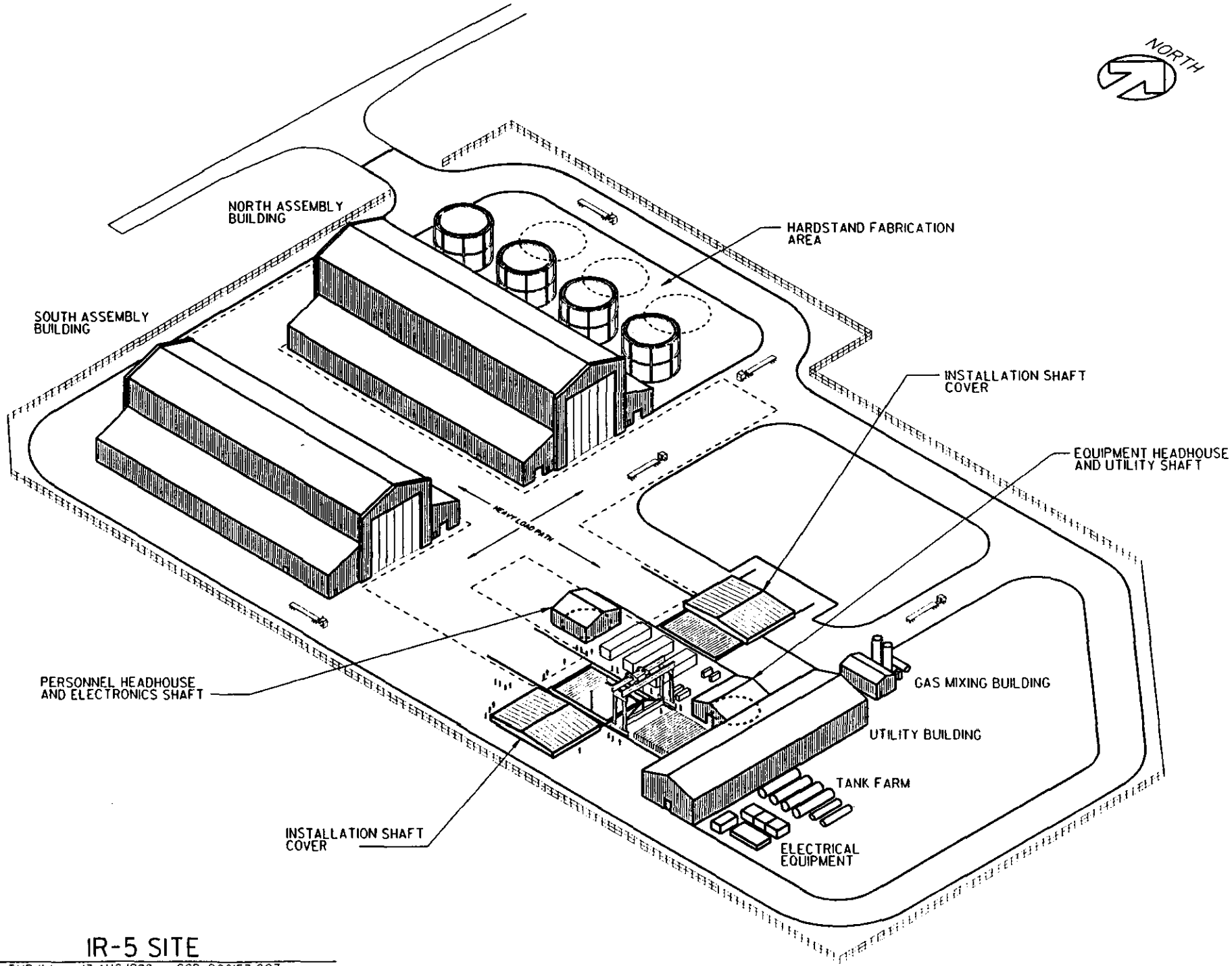

IR-5 SITE

TVP/kh - 17 AUG 1992 - GCD-000157.003

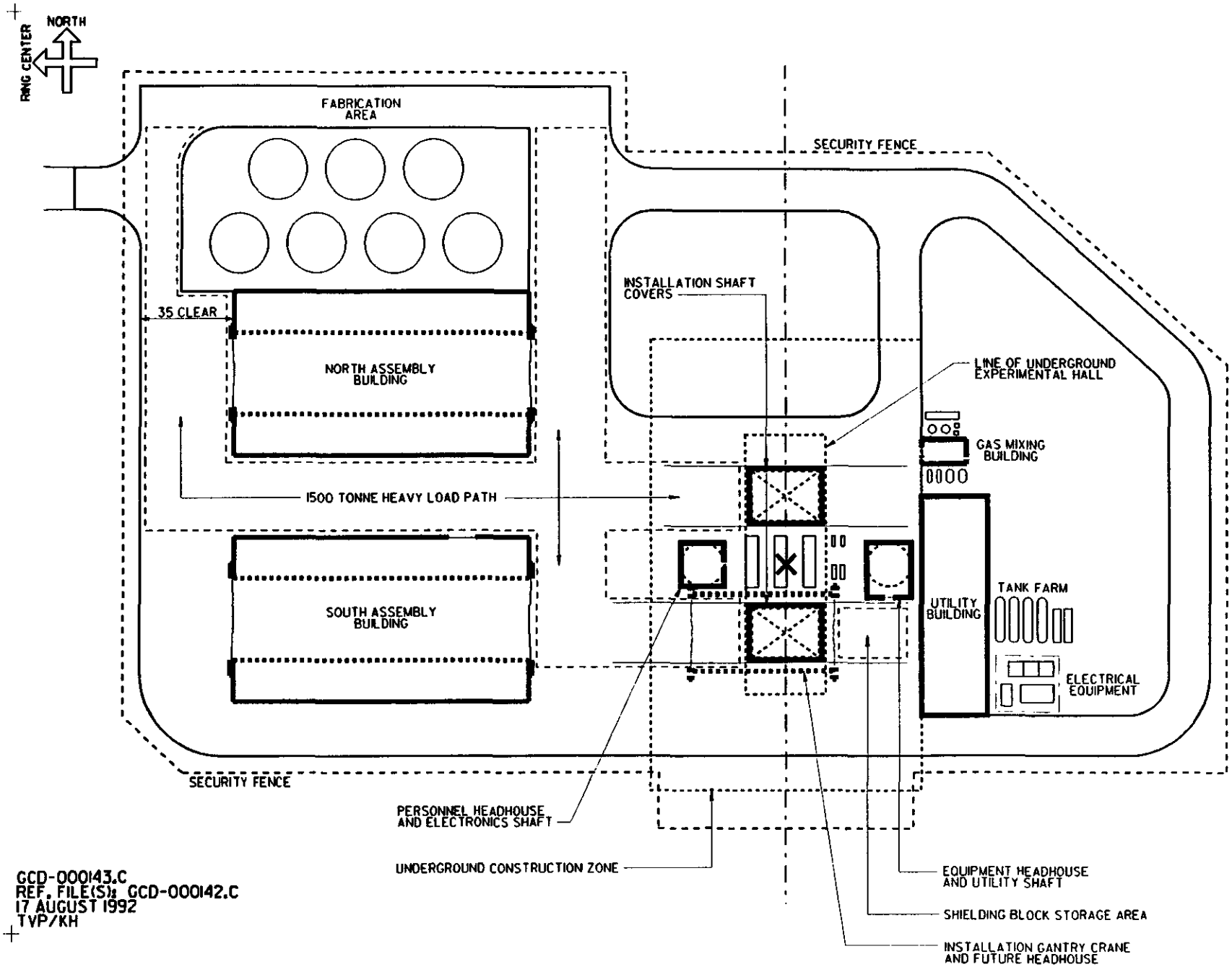

GCD-000143.C
REF. FILE(S): GCD-000142.C
17 AUGUST 1992
TVP/KH

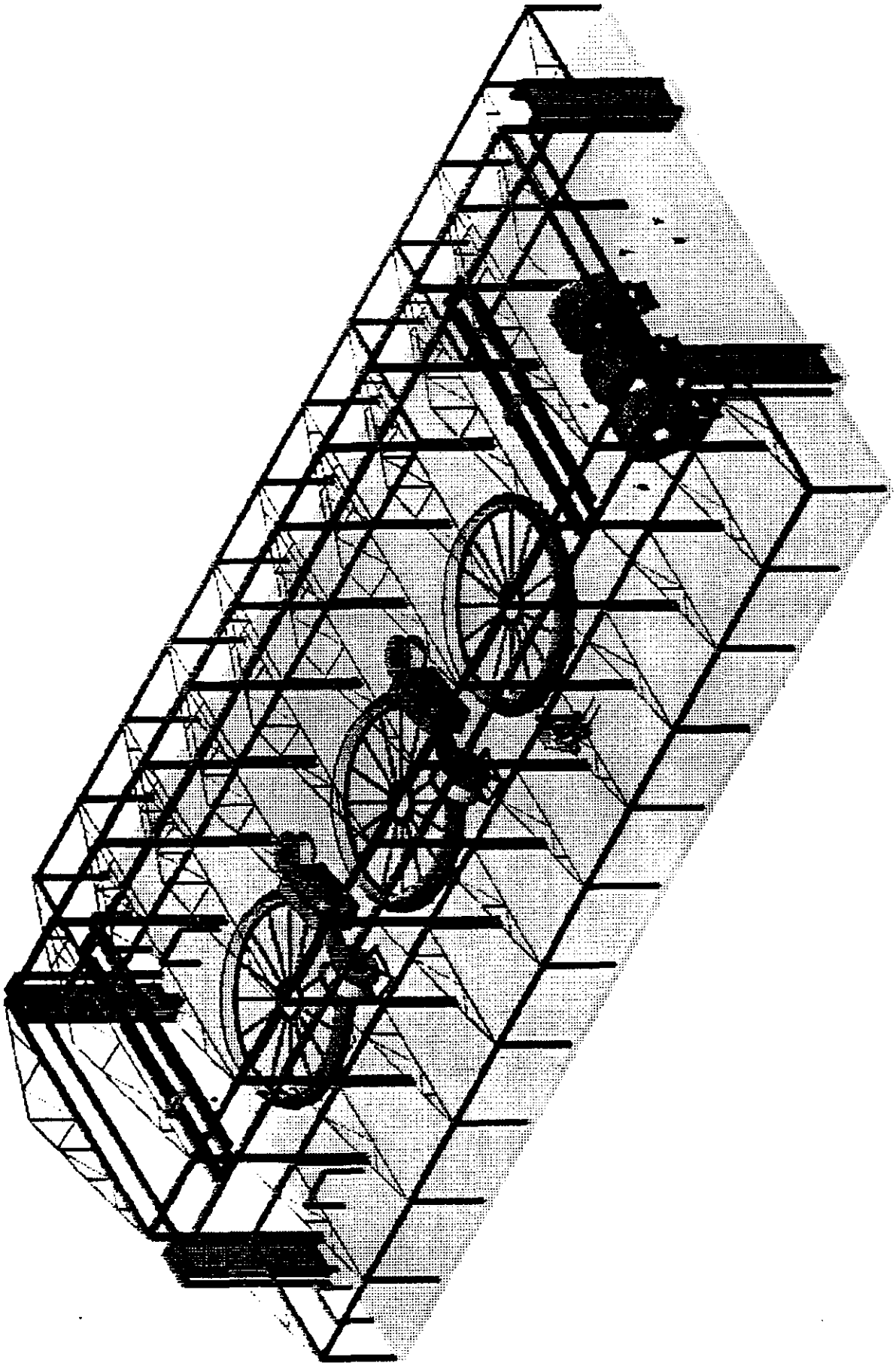

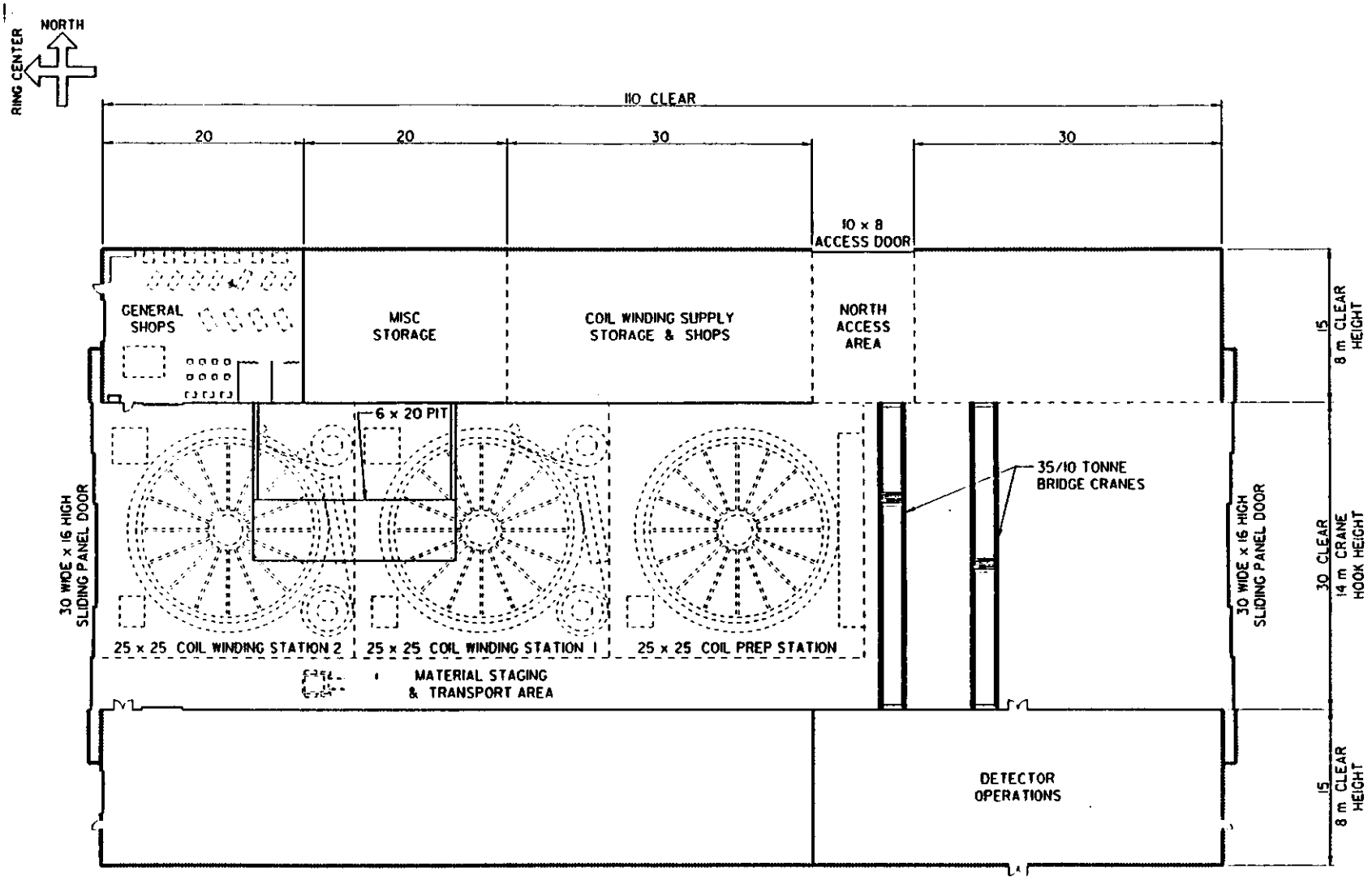

gcd000201.004
REF: gcd000236.003
08-17-92
H HAZLETT

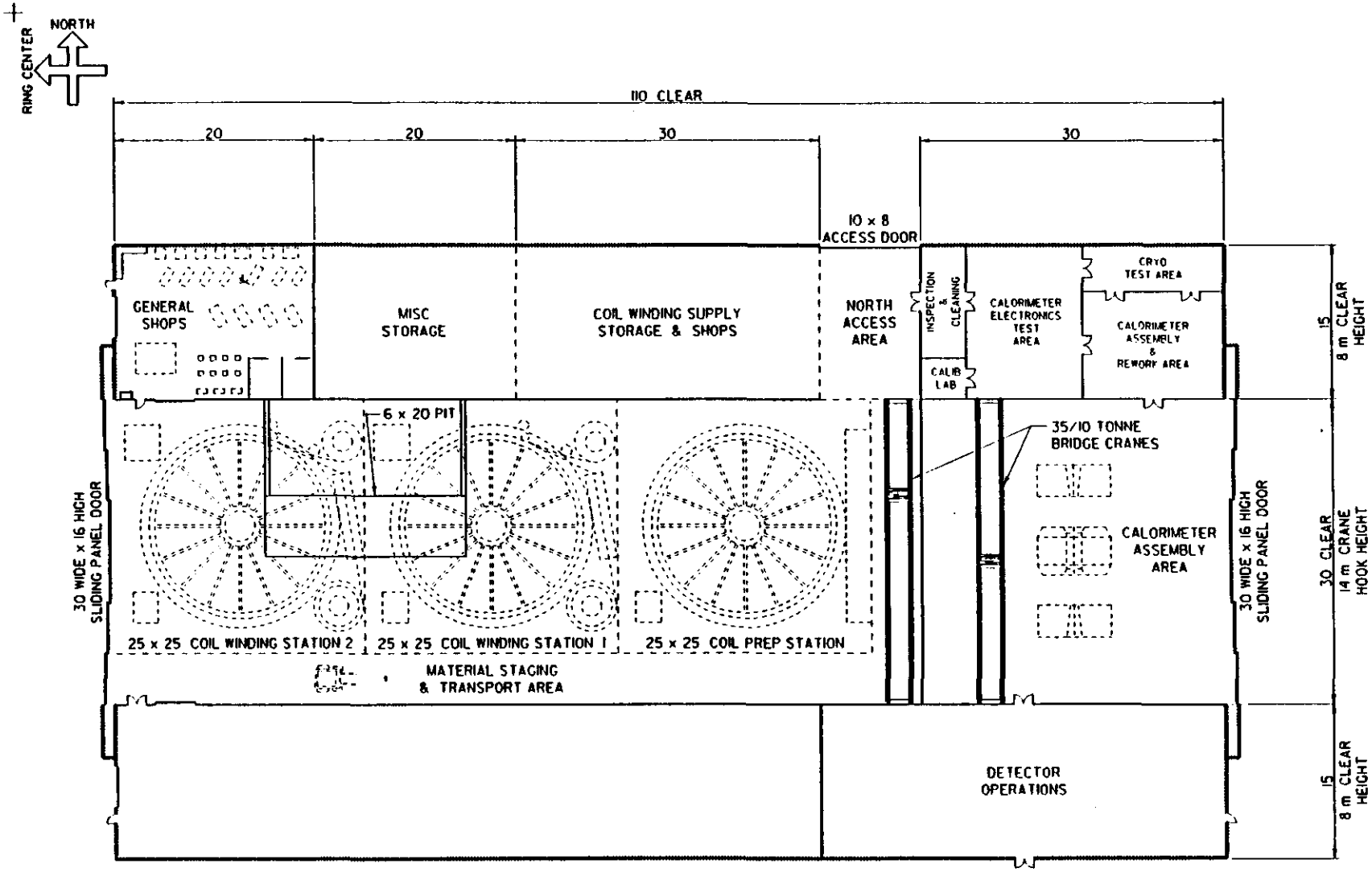

gcd000201.005
REF: gcd000236.003
08-17-92
H HAZLETT

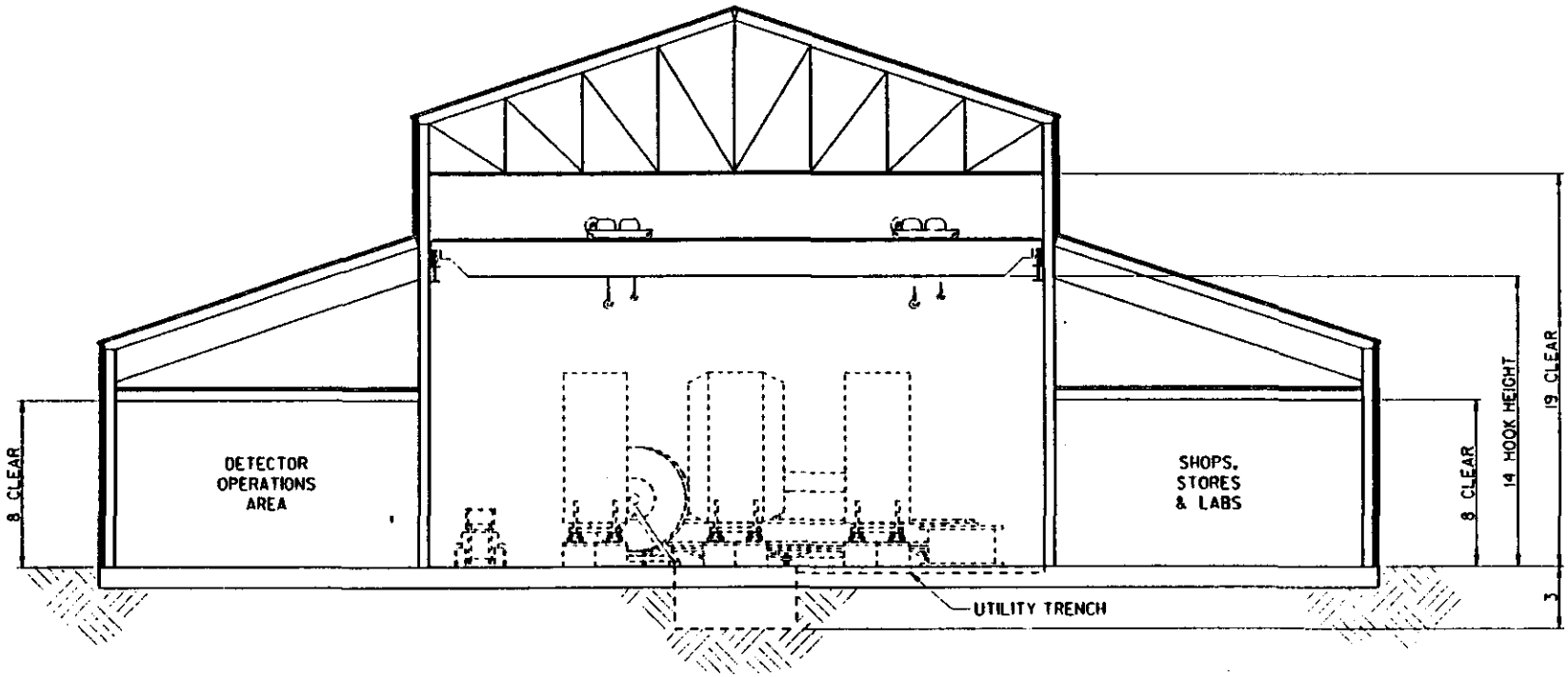

gcd000202.004
REF: gcd000237.003
08-17-92
H HAZLETT

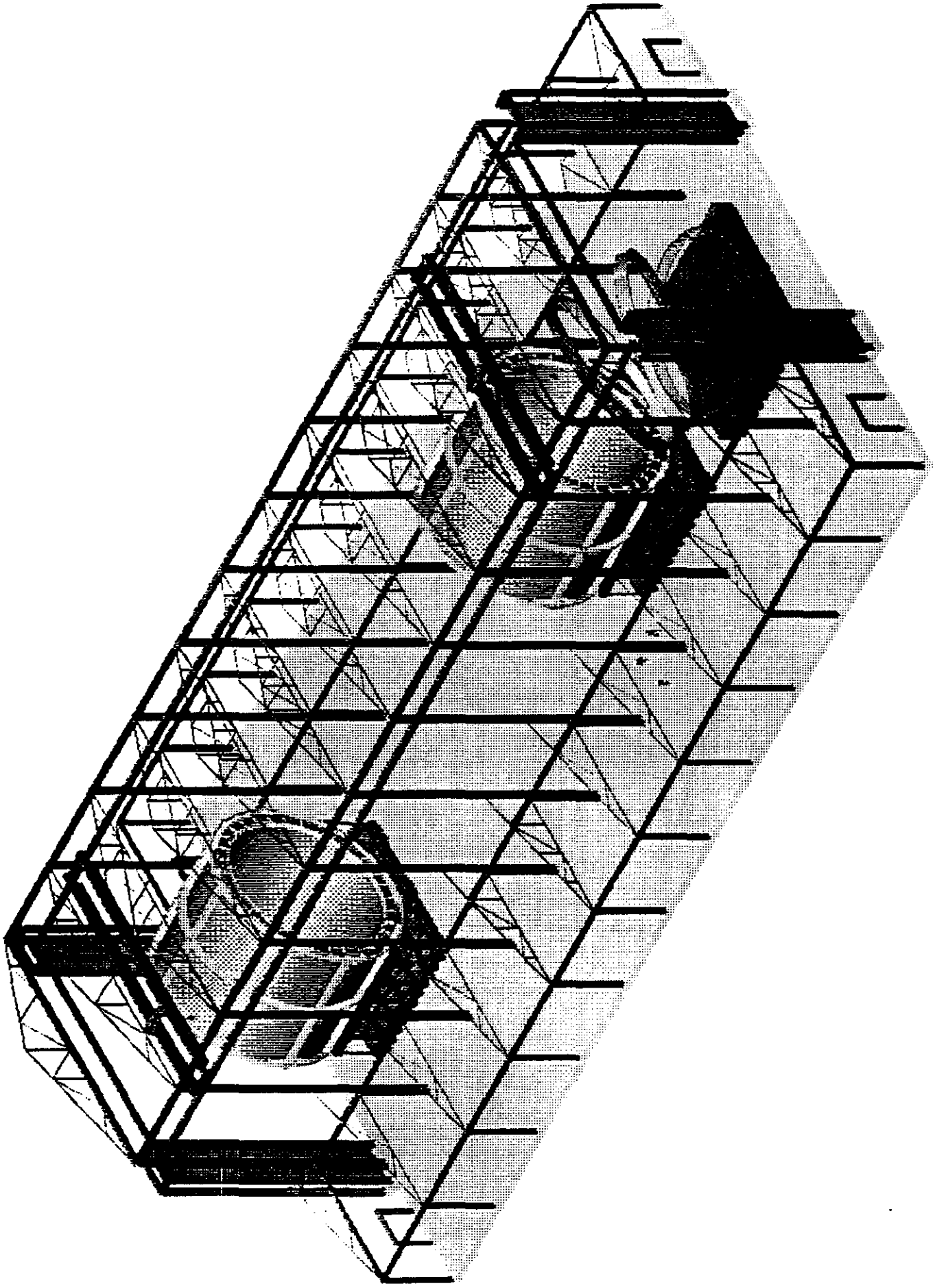

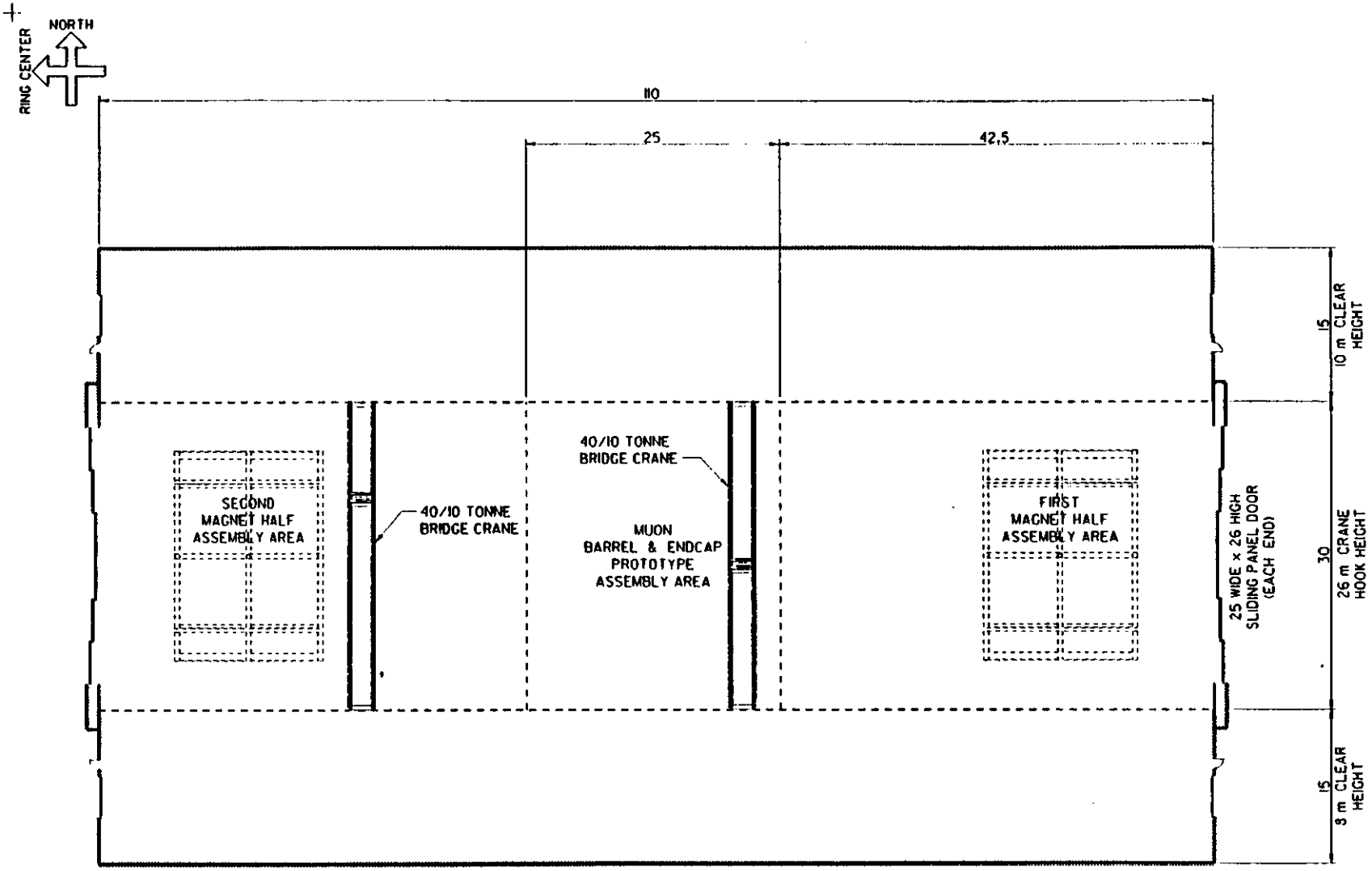

gcd000130.002
REF: gcd000240.001
08-17-92
H HAZLETT

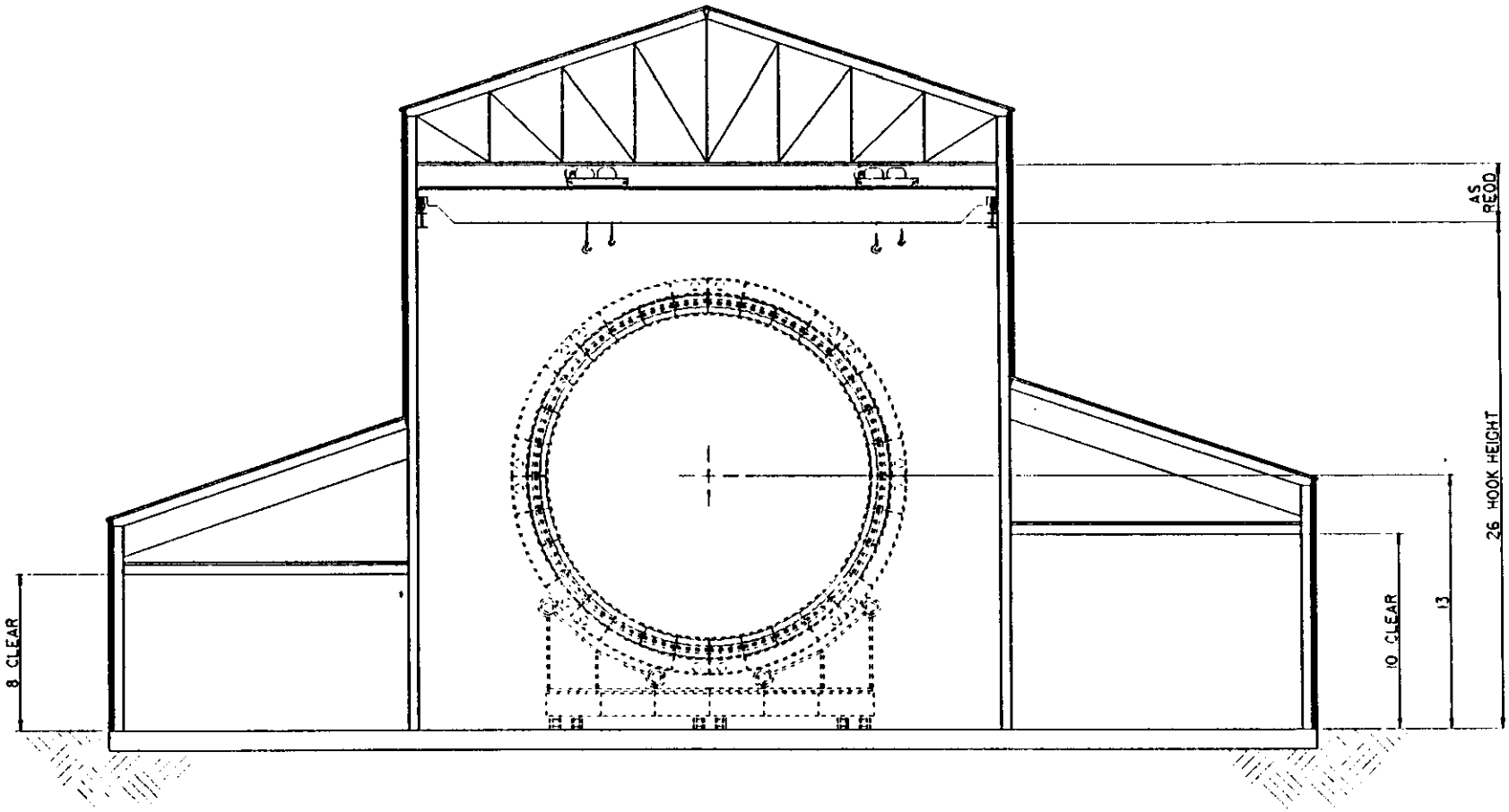

gcd000131.002
REF: gcd000241.001
08-17-92
H HAZLETT

Superconducting Super Collider

Thermal Radiation Shields, Cold Mass Supports, Cryogenic System, Forward Field Shaper & Central Membrane

Joel M. Bowers
Richard P. Warren
Sarah J. Wineman
Robert M. Yamamoto

Lawrence Livermore National Laboratory
August 18, 1992

LN2 Thermal Radiation Shields

- Function
  - to provide a thermal radiation barrier to all LHe cooled surfaces so that heat load is minimized

- Requirements
  - enclose each half coil in a LN2 cooled radiation shield
  - allow access to potential high maintenance areas: superconducting joints/splices, LHe circuit weld joints

LN2 Shield Design

- 1/8" thick aluminum panel (6061-T651)
- cooled using LN2 flowing through a 1 3/8" square by 1.0" ID aluminum extrusion tube (1100-0) GMAW welded to panel
- nominal panel dimensions are 4m wide by 15m long
- panels inserted between inner vacuum vessel wall and half coil (inner panels) and outer vacuum vessel wall and half coil (outer panels)
- 32 panels required per half coil; 64 total (16 inner and 16 outer panels per coil half)
- panel to panel tube joints made utilizing automatic tube welder - butt to butt fusion weld (1100-0 Alum)
- panels are insulated with approx. 20 layers of superinsulation on both sides

Effectiveness of Superinsulation[1]

[1]graph reproduced from paper: *Techniques for Reducing Radiation Heat Transfer Between 77 and 4.2K*; E.M.W. Leung, R.W. Fast, H.L. Hart and J.R. Heim, Fermi National Accelerator Laboratory, Batavia, Illinois

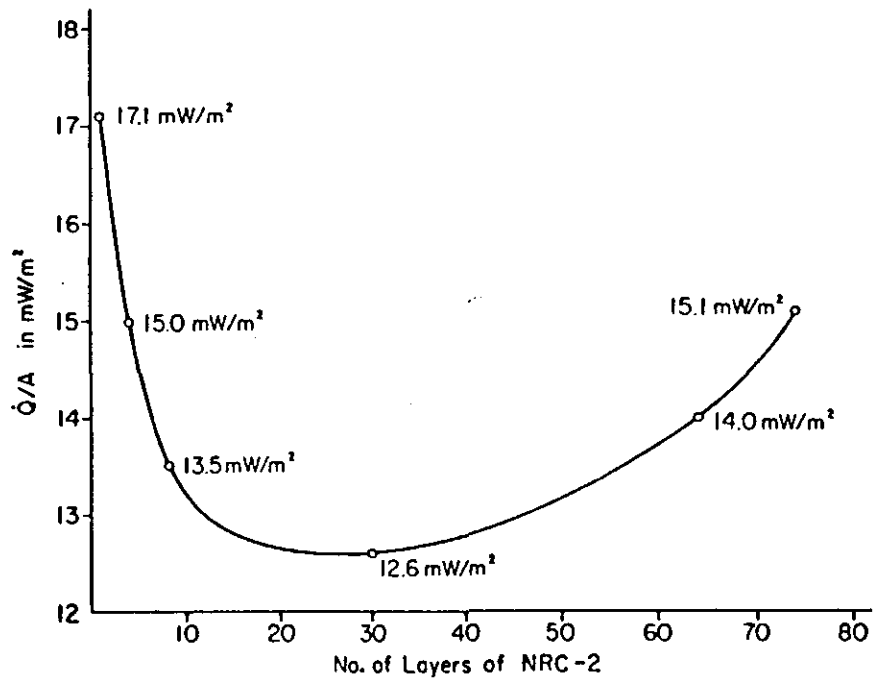

Fig. 6. Radiation heat flux vs. number of layers of NRC-2 in a 50.8-mm gap from 77 to 4.2 K.

RMY-01
6/24/92

LN2 Shield Design - Analysis Summary

- panel deflection (includes support bracing)
  - horizontal orientation
  - vertical orientation
  - end cap interface
- support pins
  - material/stress analysis
  - pin spacing
- thermal contraction from 300 to 4K
  - panel movement
  - stress on LN2 U-tube plumbing connection
- temperature profile of panel at various heat loads
  - spacing of LN2 tube
  - pressure drop through LN2 tubing
- LN2 tube fusion weld material compatibility

LN2 Panel Orientation

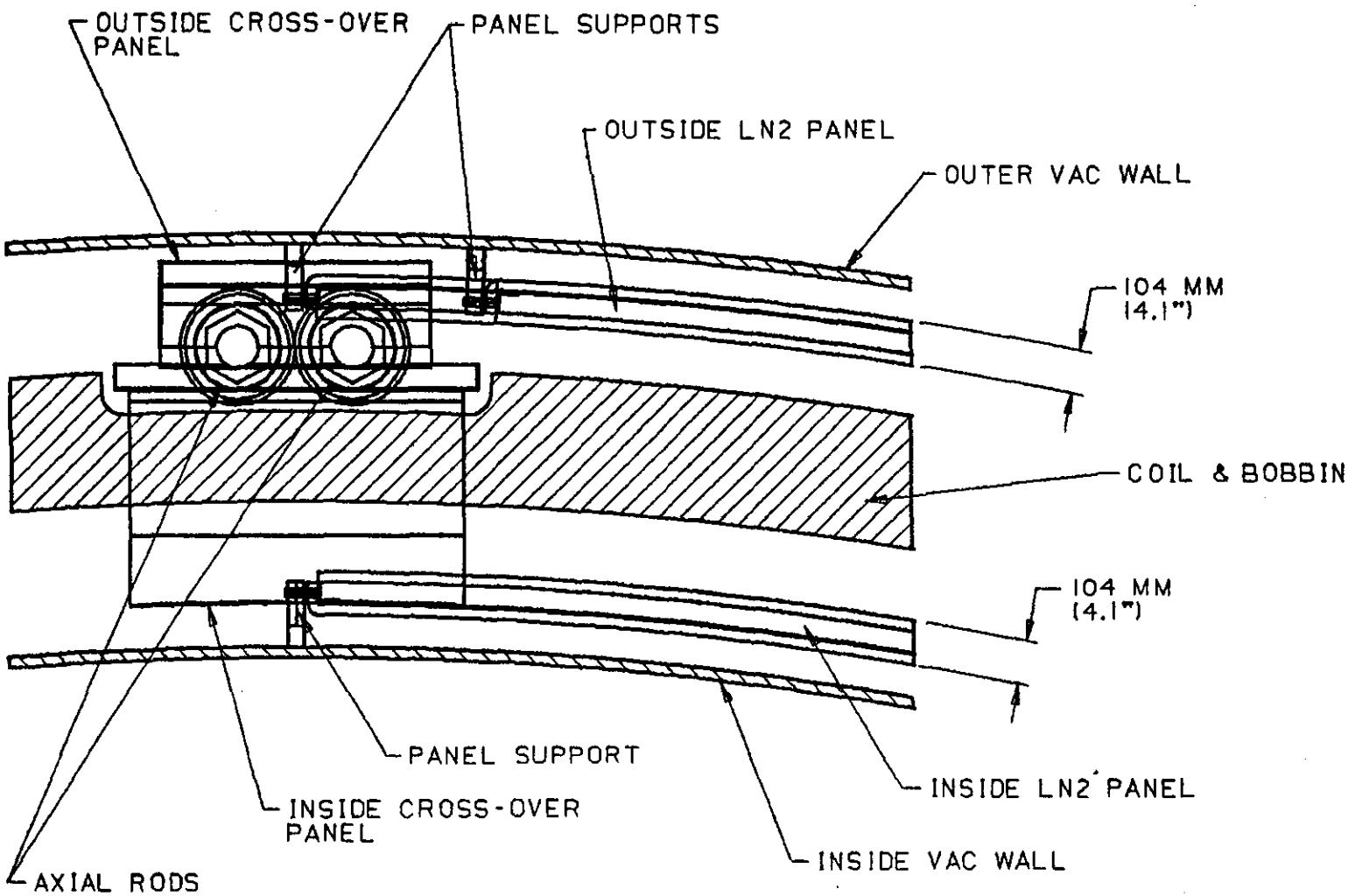

RMY-01
8/13/92

LN2 Flow Pattern

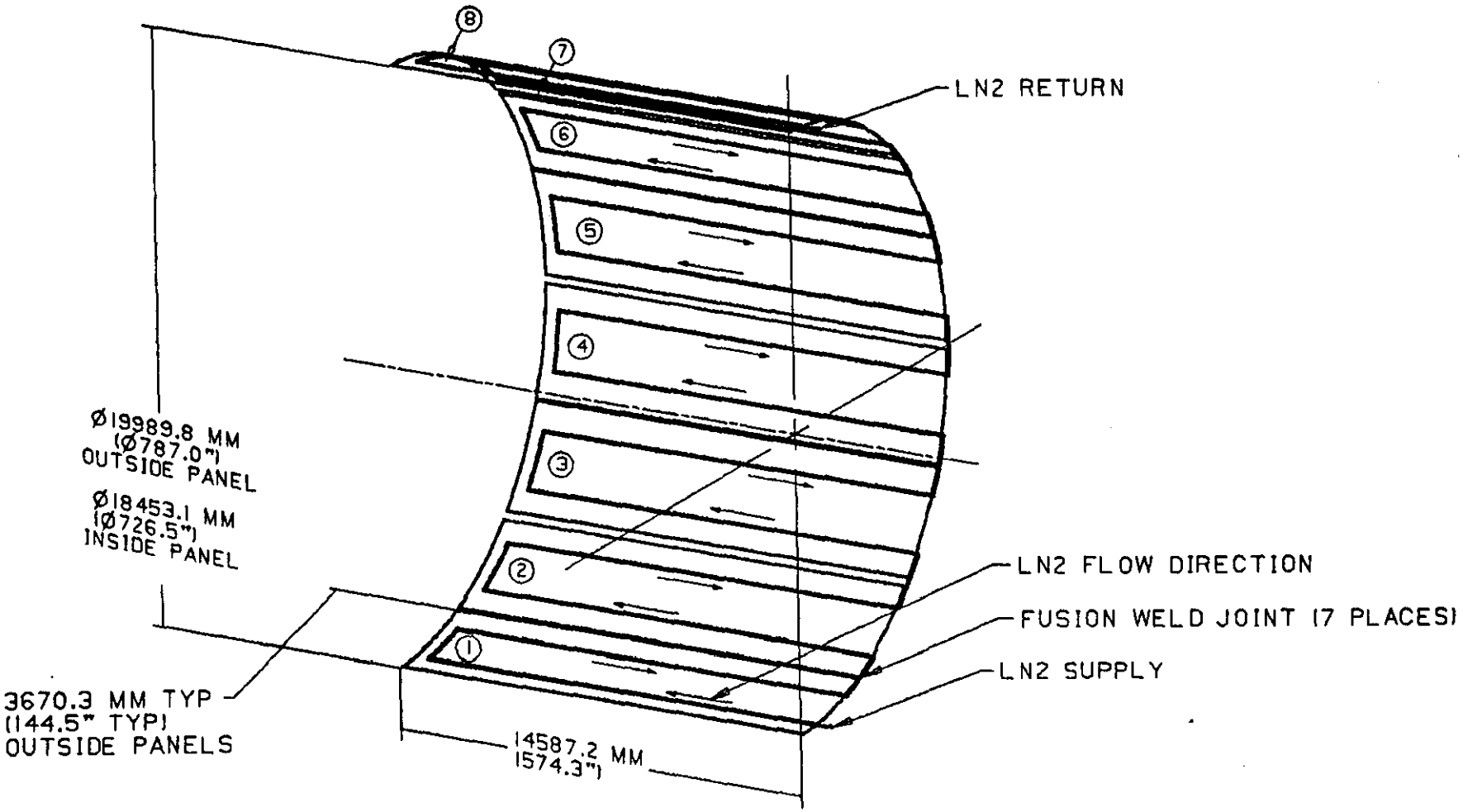

RMY-01
8/13/92

LN2 Radiation Shield Panel - Detail

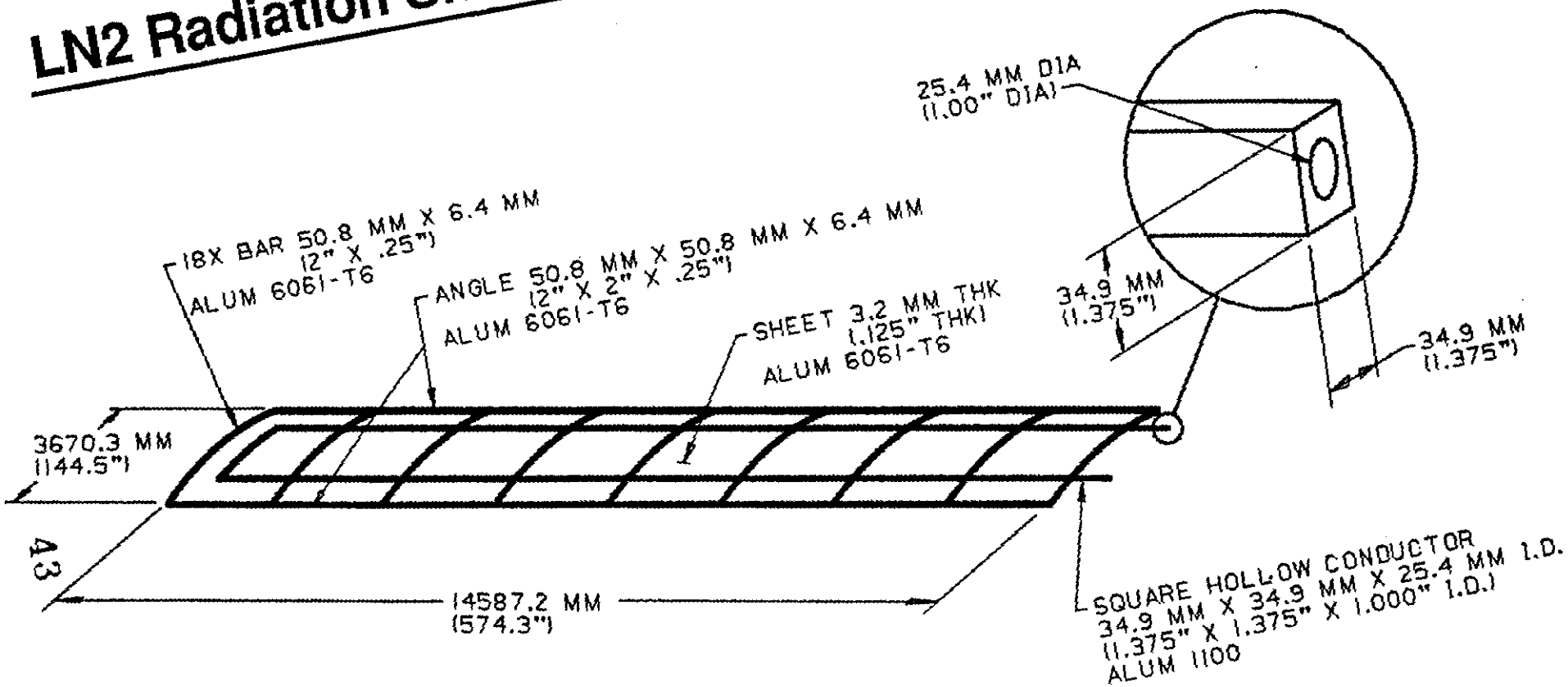

LN2 Panel - Single Shield Assembly

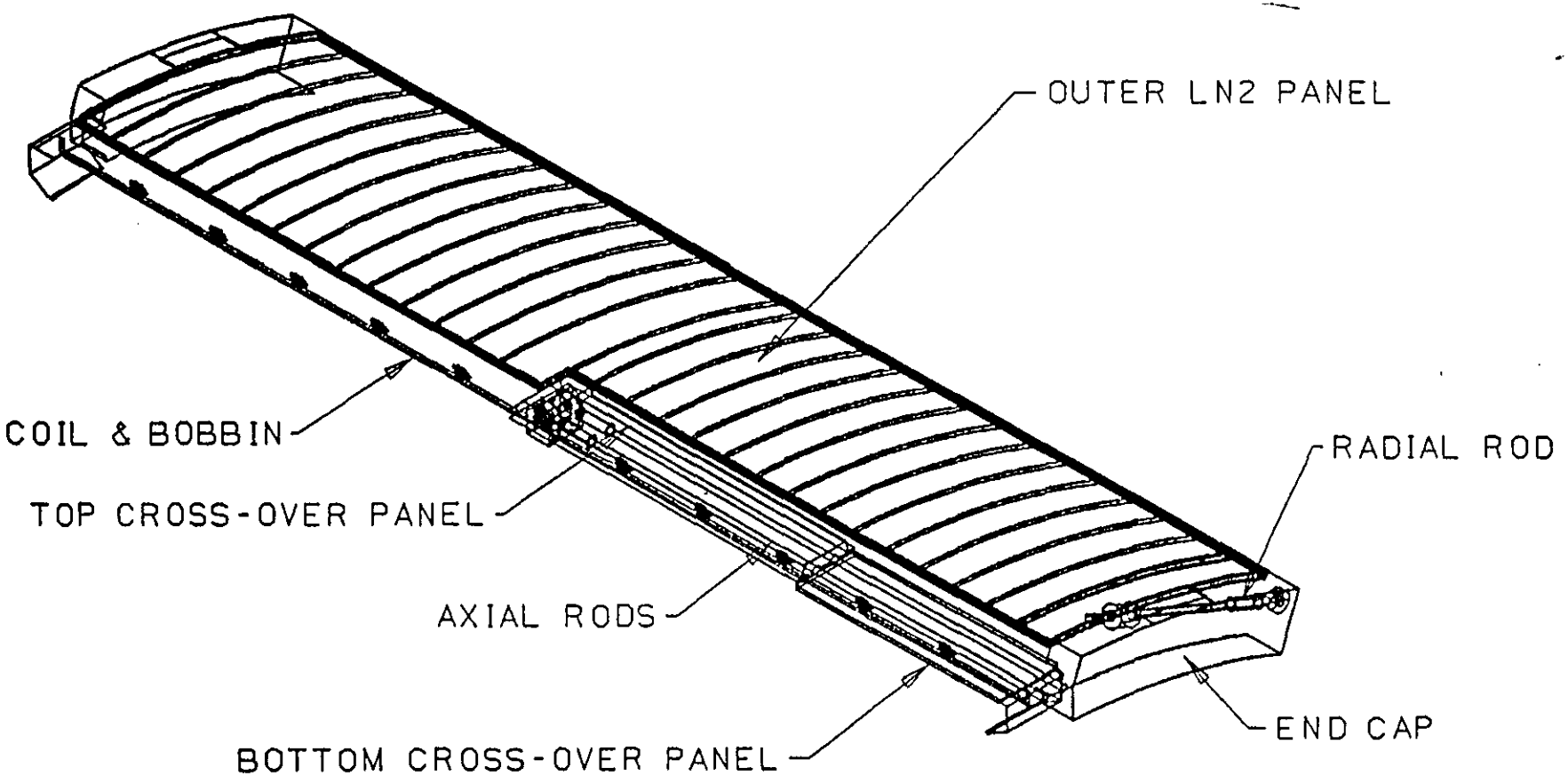

RMY-01
6/24/92

LN2 Panel - End Concept

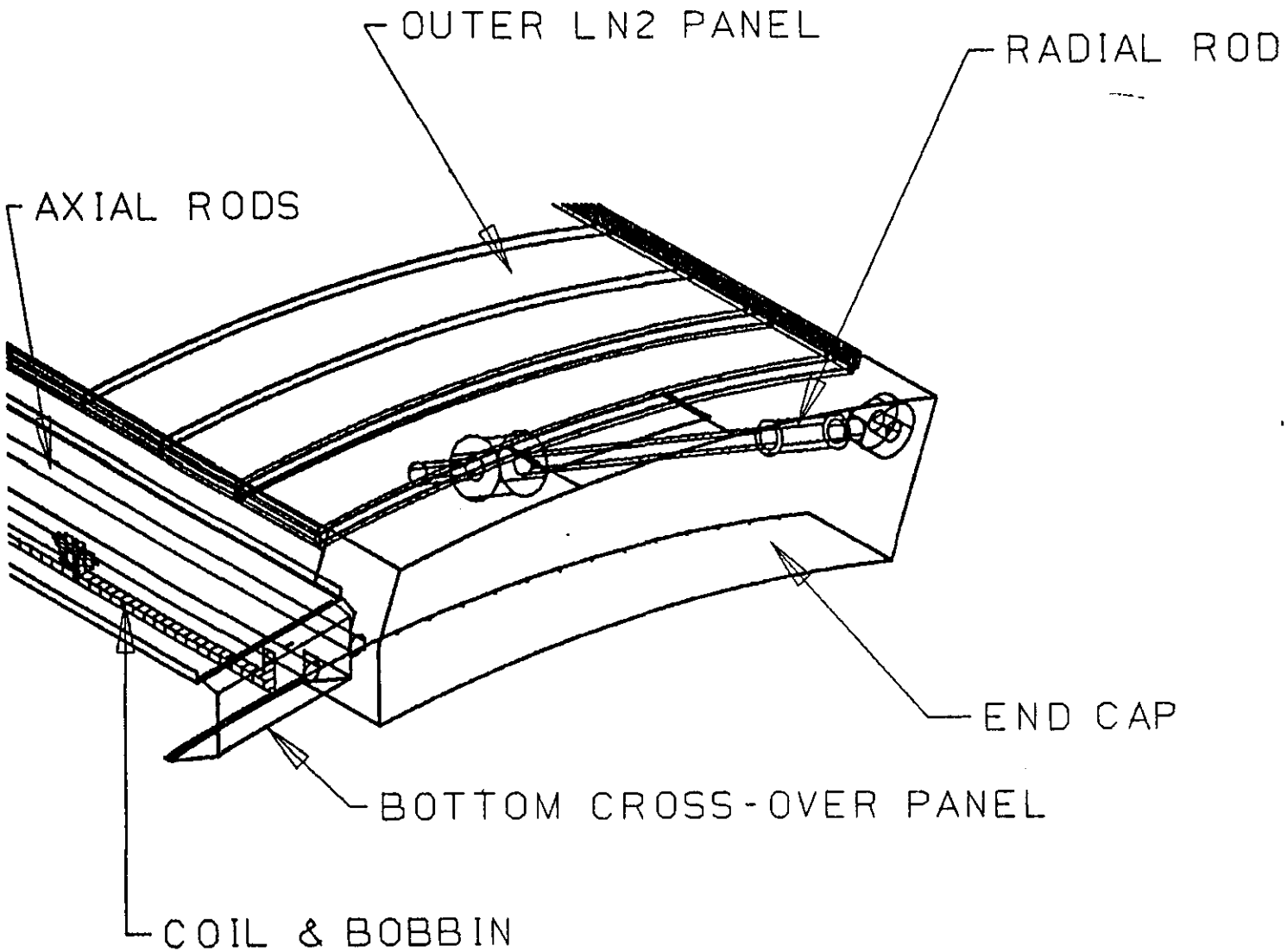

RMY-01
6/24/92

LN2 Panel - Support Concept

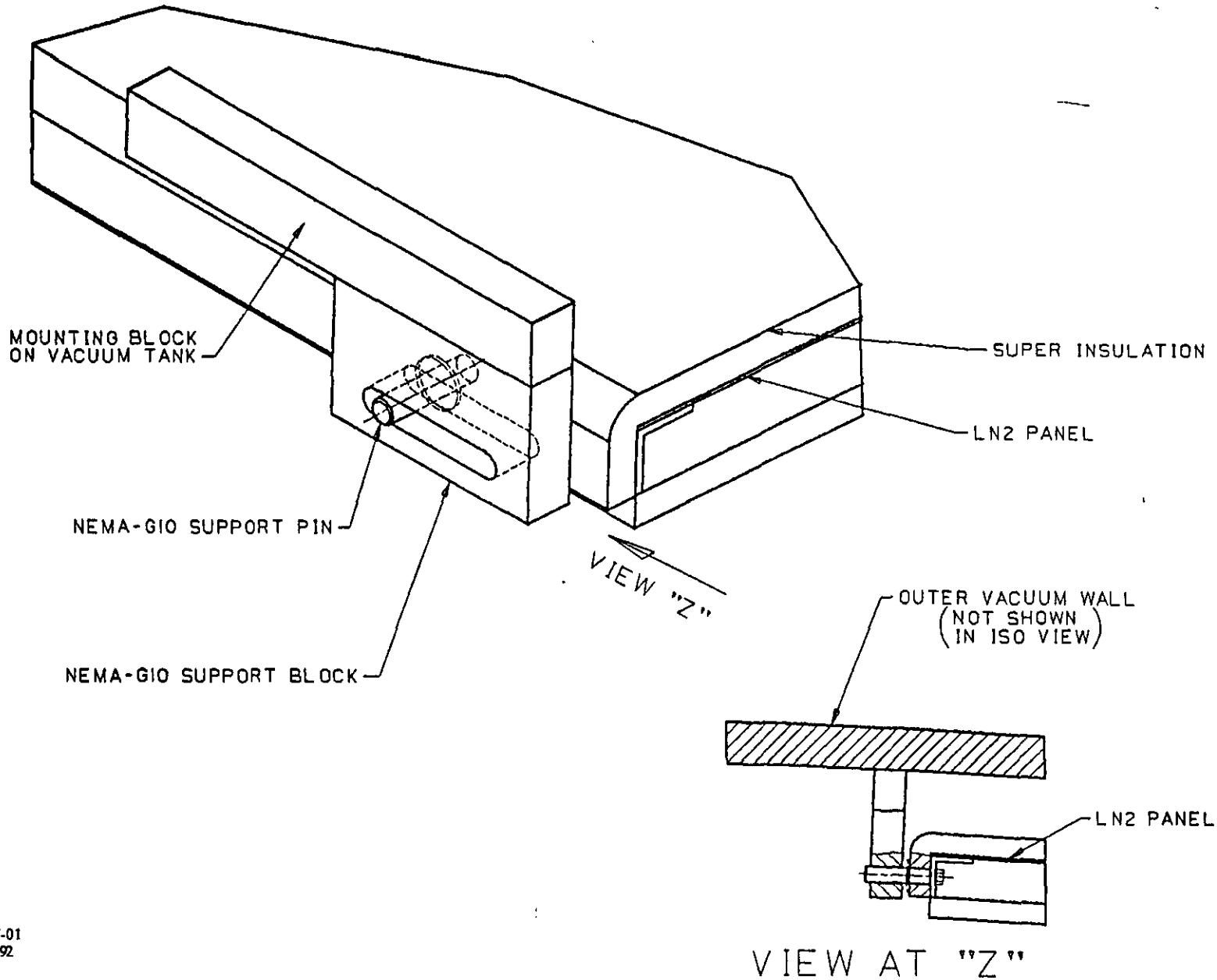

RMY-01
6/24/92

LN2 Shield Design - Summary

- conceptual design is complete
  - no "show stoppers"
  - provides access to anticipated maintenance areas
- system is compatible with overall magnet assembly
- system can be leak checked prior to coil installation
- LN2 weld joints (automatic fusion weld):
  - reliable at cryogenic temperatures
  - joints are easily accessible
  - number of joints minimized

Cold Mass Supports

- Function
  - to support static weight of coil (525 metric tonnes per coil half)
  - to maintain magnetic alignment of coil to beam axis
  - to counteract magnetic force on coil when energized (52 mega-newtons per coil half)

- Requirements
  - minimize heat load to 4°K surfaces
  - allow for thermal contraction of the coil while minimizing additional stresses/distortion to the assembly
    - coil will contract approx. 3.50" on the diameter
    - coil will contract approx. 2.50" axially
  - correctly position/maintain magnetic centerline of the coil relative to the beam axis

Radial Support Rods

- 4"ø inconel rods (inconel 718), approx 11' long
- 8 pairs per half coil end; 64 total
- rods support static weight of half coil
- rods rotate inward as coil contracts from 300 to 4K
- utilizes spherical bearings/washers to eliminate bending moment on rods
- utilizes belleville spring washers to maintain tension preload on rods during all operating scenarios
- preload applied to rod pairs by hydraulic cylinders
- allows coil to contract symmetrically about the beam axis so that the magnetic centerline position remains constant

Vacuum Vessel Assembly - Layout

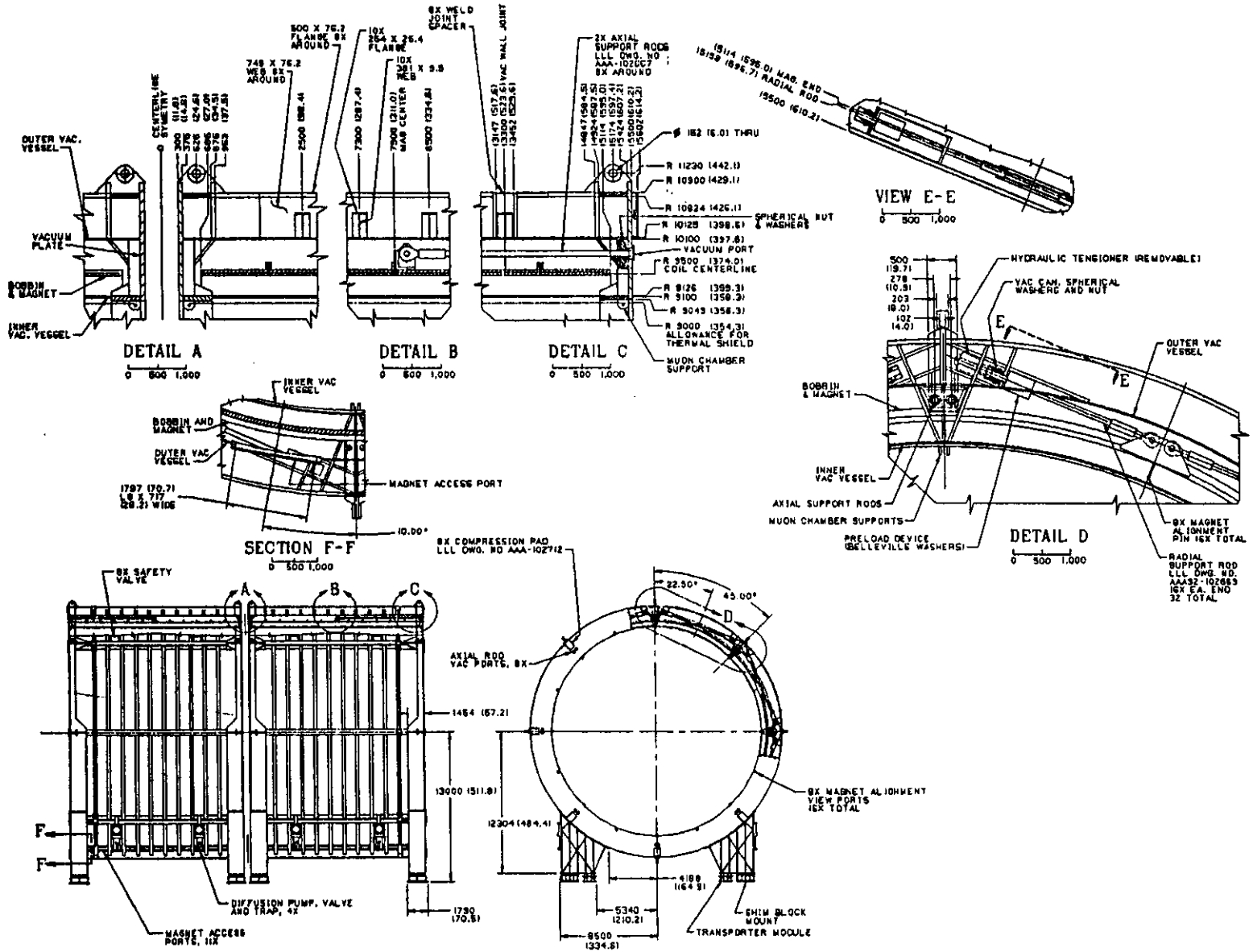

RMY-01
8/7/92

Vacuum Vessel End - Detail

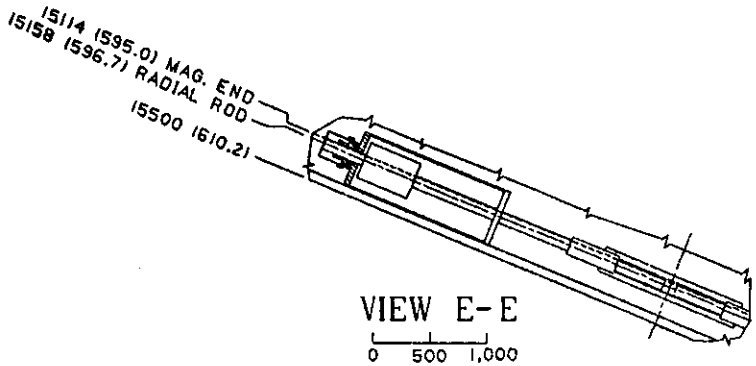

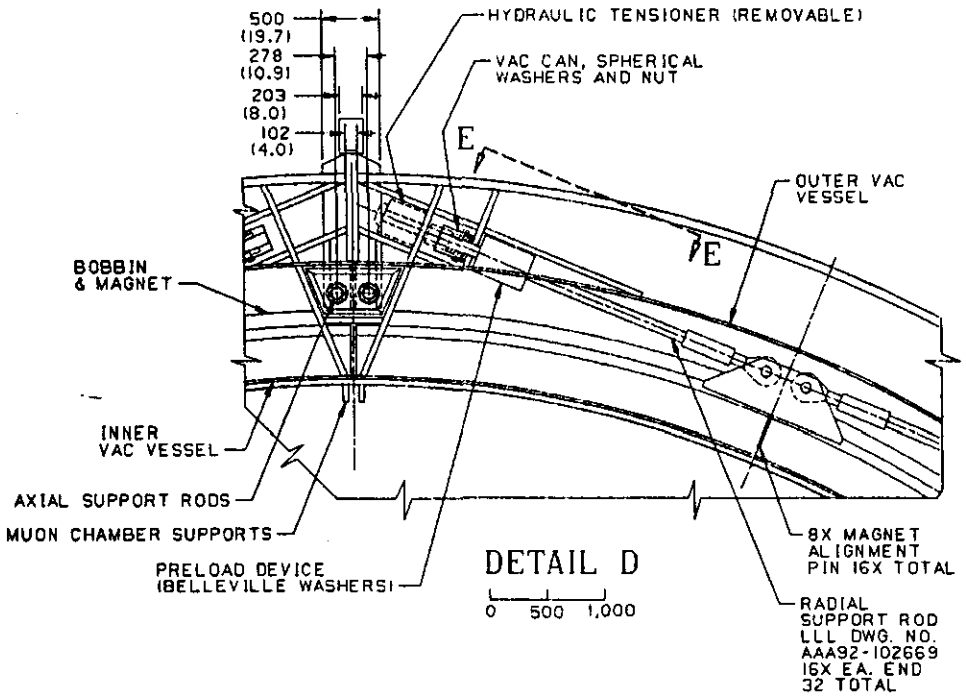

RMY-01
8/7/92

Radial Rod - Detail

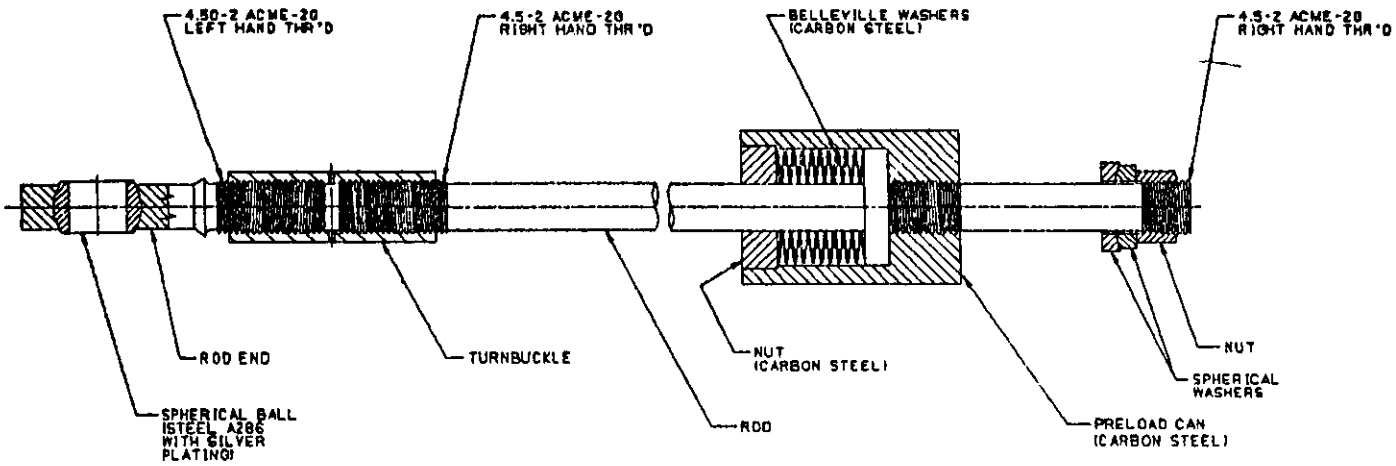

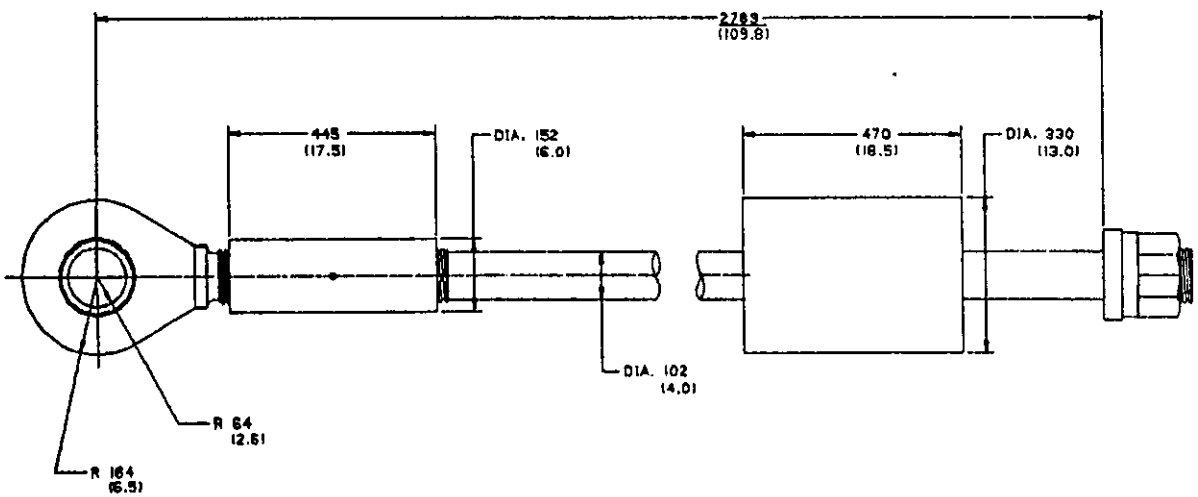

RMY-01
6/24/92

Axial Support Rods

- 4"ø inconel rods (inconel 718), approx 24' long
- 16 per half coil end; 32 total
- rods counteract load on coil due to magnetic forces (rods always in tension as half coils are attracted to one another)
- keeps coil correctly positioned in the z-direction (beam axis)
- utilizes spherical bearings/washers to eliminate rod bending

Axial Support Rods - Position Layout

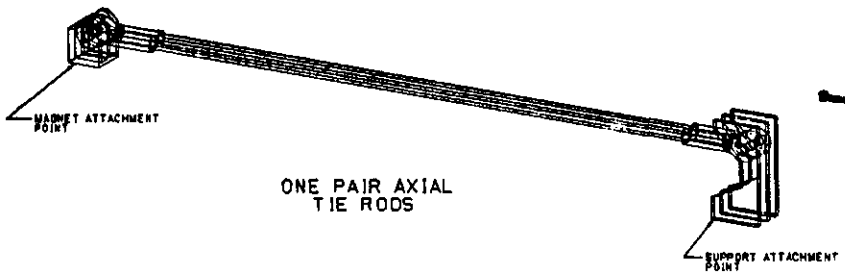

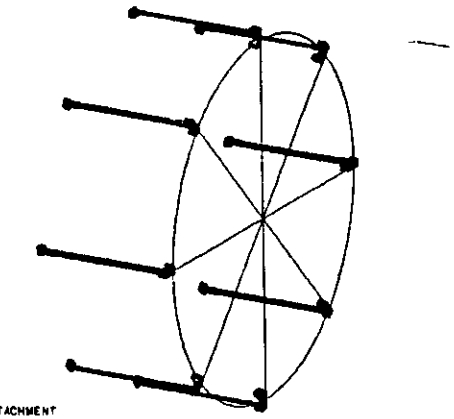

AXIAL TIE ROD LOCATIONS

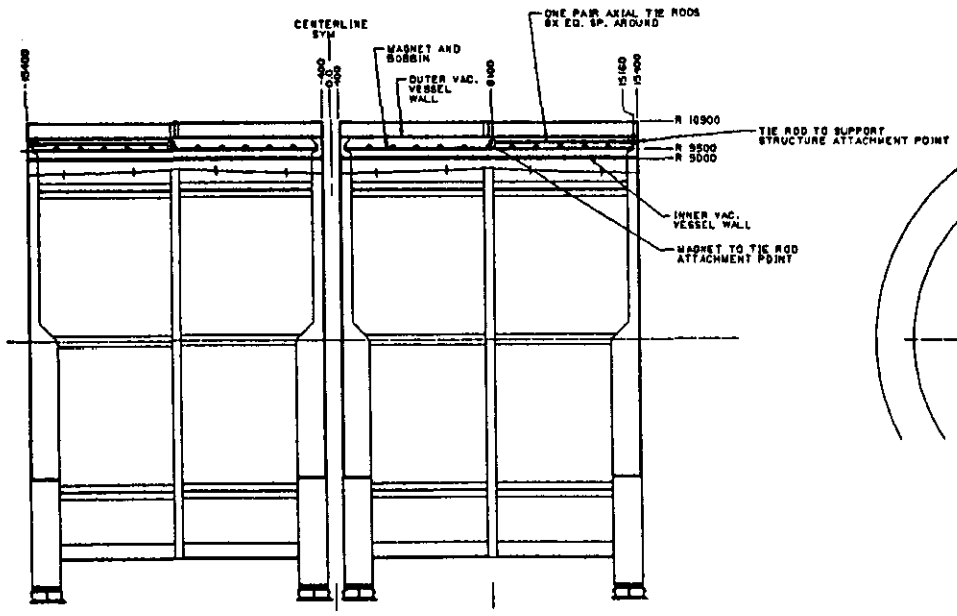

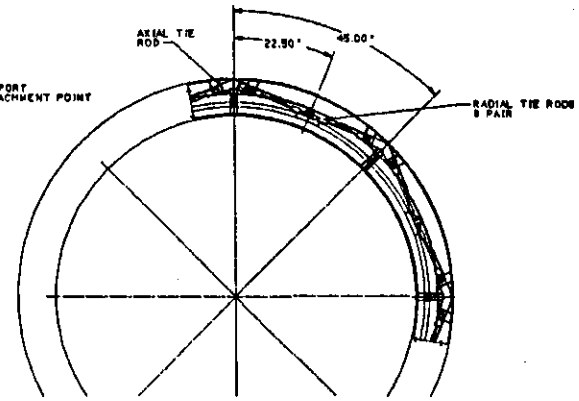

RMY-01
6/24/92

Axial Rod - Detail

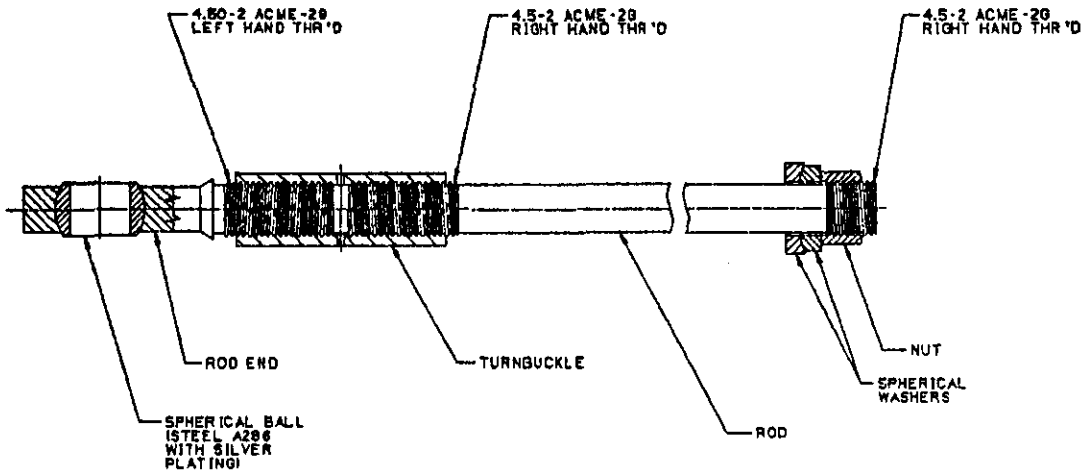

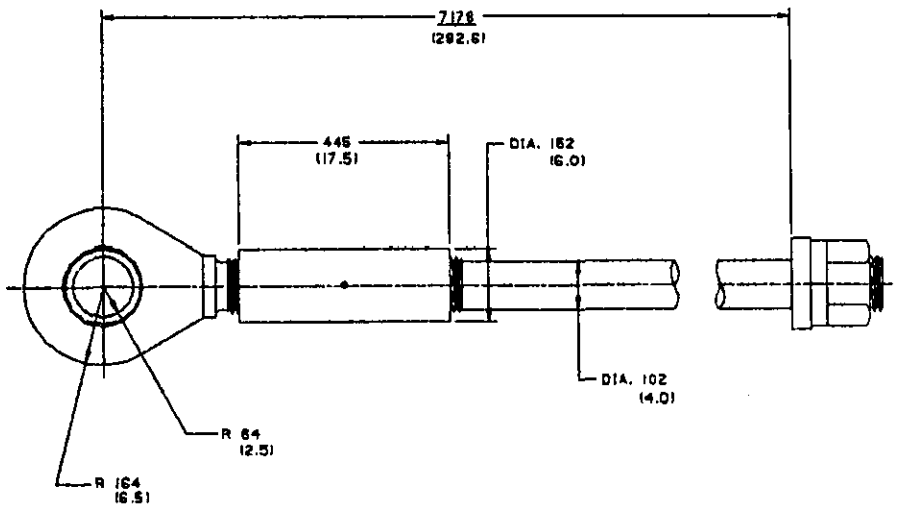

RMY-01
6/24/92

CMS LN2 Intercept - Spiral Tube Concept

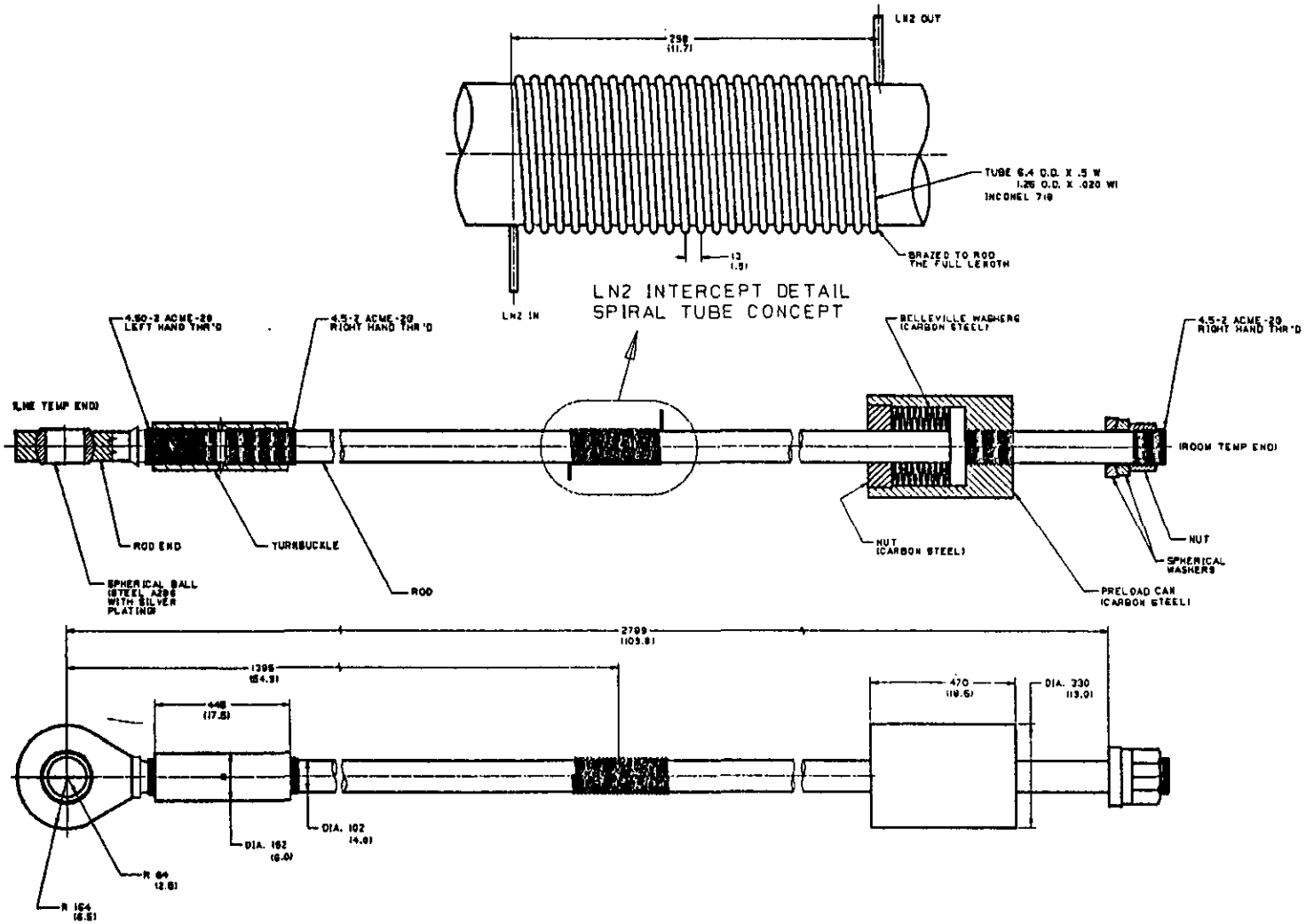

RMY-01
8/7/92

LN2 Intercept - Spiral Tube Heat Transfer Anal.

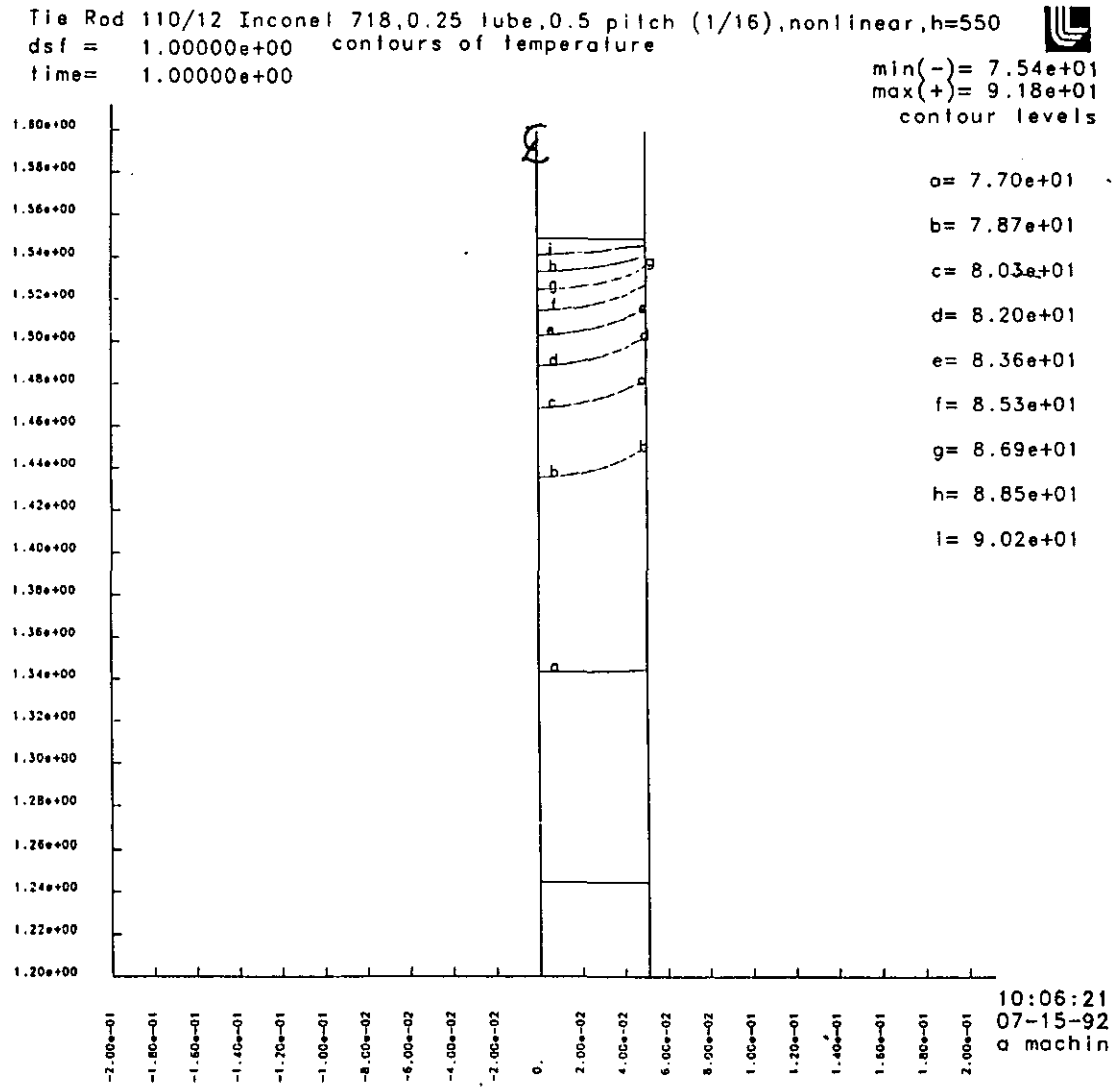

RMY-01
8/7/92

CMS LN2 Intercept - Bellows Concept

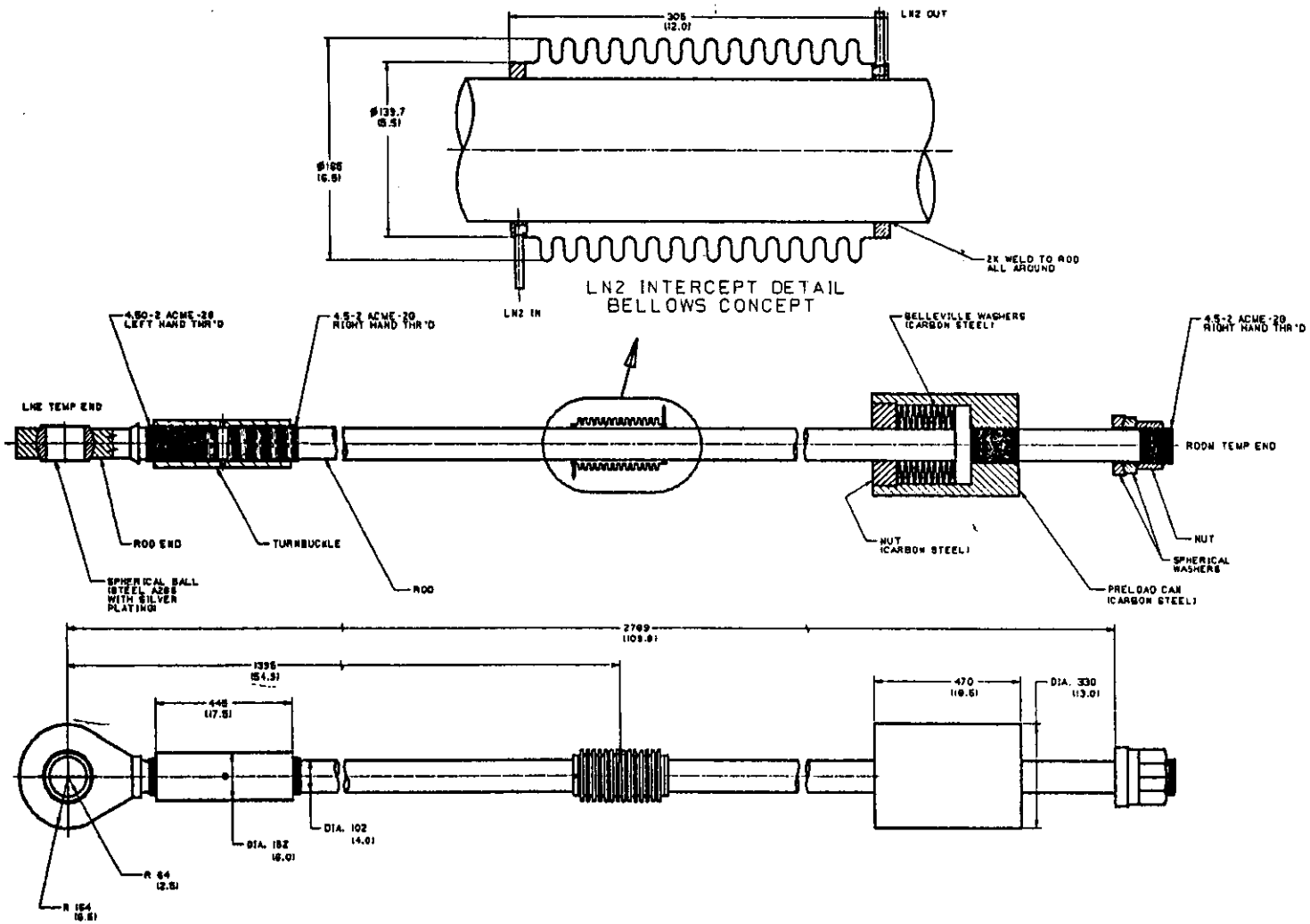

RMY-01
8/7/92

Cold Mass Supports - Concept Review

- Advantages:
  - support concept utilizes "soft system" philosophy that allows coil movement (thermal and magnetic) while still maintaining support integrity (gravity load)
  - multiple support points on coil "spread out" loads and minimizes coil distortion
  - coil contracts symmetrically about the z-axis which maintains magnet centerline position
  - concept is well-proven with many precedents:
    * MRI magnets made by IGC
    * CDF magnet at FERMI
    * ZEUS magnet at DESY
    * VENUS magnet at KEK
    * DELPHI magnet at CERN
    * concept for SDC magnet
- Disadvantages:
  - small increase in stress induced by thermal contraction of the coil and the rod
  - assembly and rod tightening sequence requires a well thought out procedure but has been demonstrated before

Cold Mass Supports - Analysis Summary

- conduction heat load to LHe system (77 to 4K)
  - radial rods: 75 watts (Titanium)[1]
  - axial rods: 25 watts (Titanium)[1]
- stress analysis of rod and coil interface
  - under gravity loading (525 metric tonnes)
  - tilted orientations (vertical assembly compatibility)
  - during cooldown (300 to 4K)
  - energizing of magnet
    (52 MN axial force + 0.32 MPa internal pressure)
- material compatibility
  - fracture toughness at 4K
- thermal contraction from 300 to 4K
- LN2 intercept: location & cooling surface area required
- alternate support systems:
  - reduce number of radial rods
  - reduce/increase the number of coil support points

[1]material recently changed from titanium to inconel

RMY-01
8/13/92

Cold Mass Supports - Finite Element Model

- computer mesh for coil and support rods

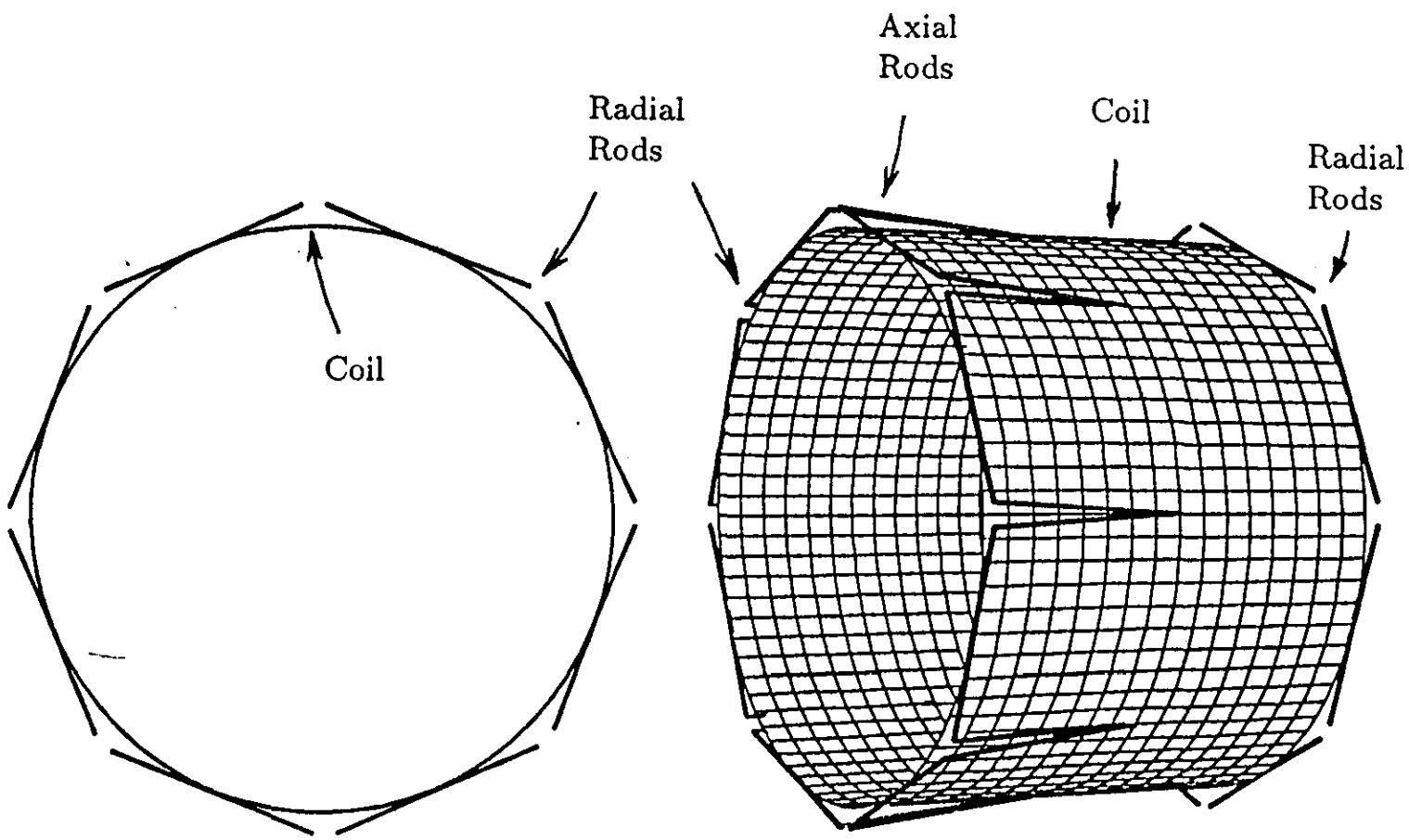

RMY-01
6/25/92

Bobbin Stress (Pa) - Combined Loading

(Wineman) Combined loadings
time = 0.10000E+02
fringes of eff. stress (v-m)
min= 3.234E+07 in element 97
max= 1.243E+08 in element 69
shell inner surface in global coordinates

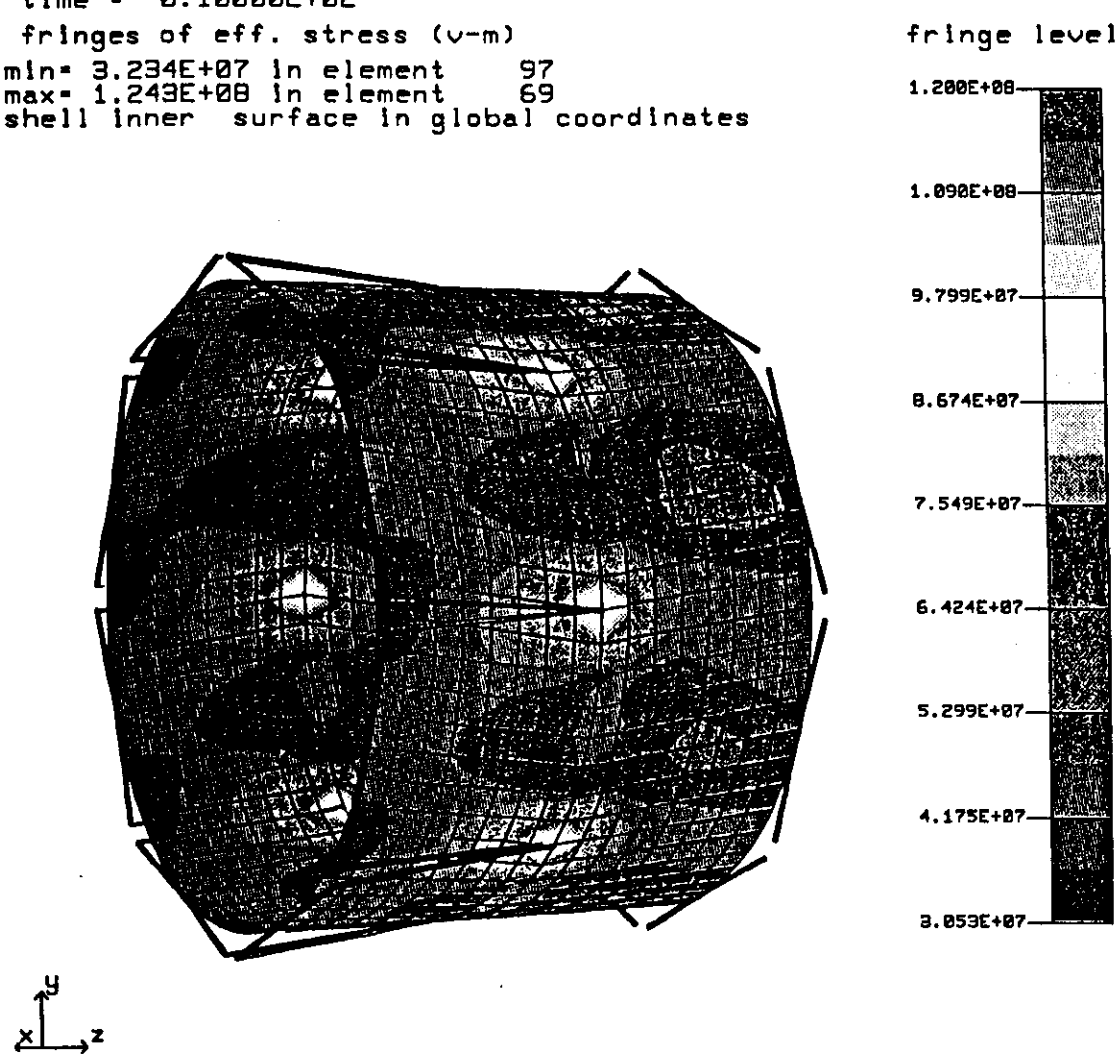

disp. scale factor = 0.100E+01 (default)

RMY-01
8/7/92

CMS Load (no preload) vs. Coil Orientation

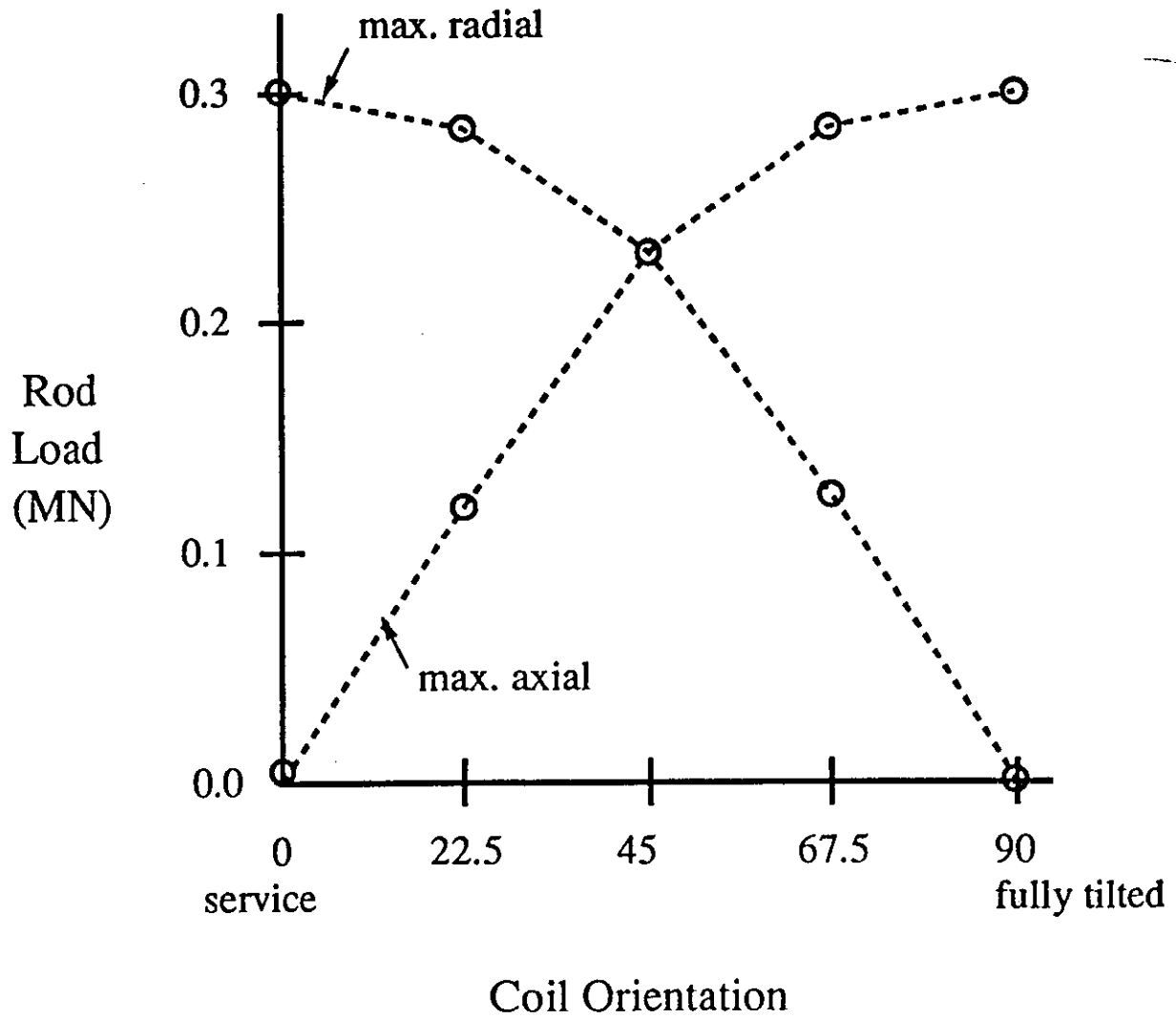

RMY-01
8/7/92

Coil Orientation (67.5 deg) vs. Bobbin Stress (Pa)

(Wineman) Grav 67.5 deg from srvc
time = 0.10000E+02
fringes of eff. stress (v-m)
min= 1.704E+05 in element 189
max= 8.382E+06 in element 236
shell outer surface in global coordinates

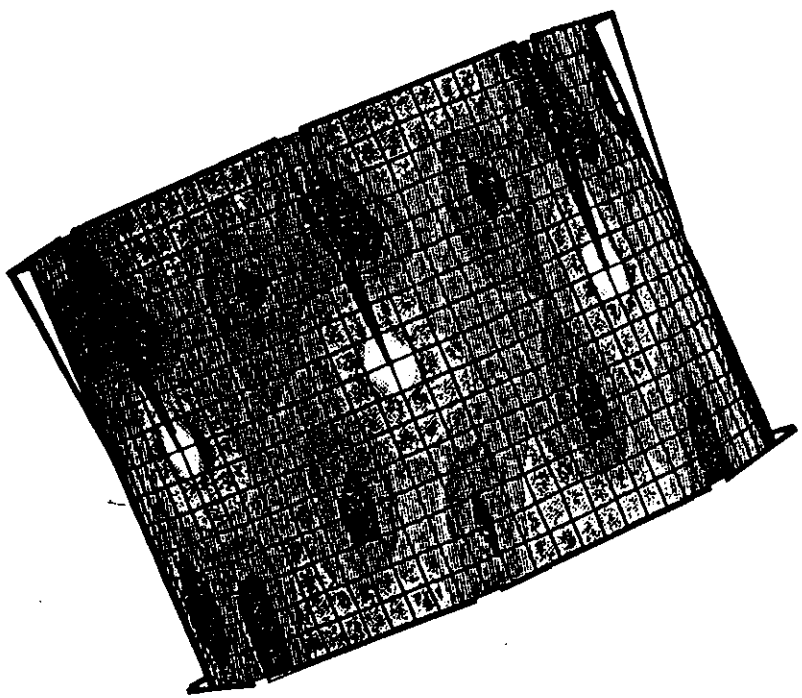

fringe levels [Pa]

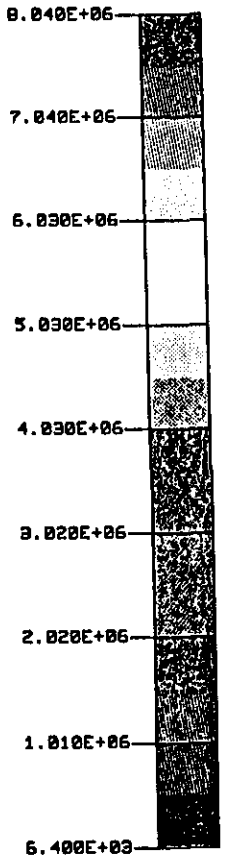

disp. scale factor = 0.100E+01 (default)

RMY-01
8/7/92

Cold Mass Supports - Analysis Results

Baseline: 8 pairs of radial rods, all in tension, 3" thick bobbin

Loading Type	Centerline Movement	Out of Round Movement[1]	Maximum Coil Stress	Maximum Rod Stress
gravity load	3.5 mm	4.5 mm	8 MPa	0.6 MN
thermal load	0	3.3 mm	4 MPa	0.3 MN
magnetic load	0	0.5 mm	60 MPa	0
TOTAL:	3.5 mm (.14 in)	4.5 mm (.18 in)	72 MPa (10.4 KSI)	0.9 MN (16 KSI)

[1] numbers not cumulative because maximum deflections occur at different areas of the coil depending on loading type

RMY-01
8/7/92

Cold Mass Supports - Summary

- conceptual design is complete
  - design meets functional requirements
- system is compatible with overall magnet assembly
- analysis being refined and documented
- attachment interface to coil and vacuum vessel in-work

Helium Flow Schematic

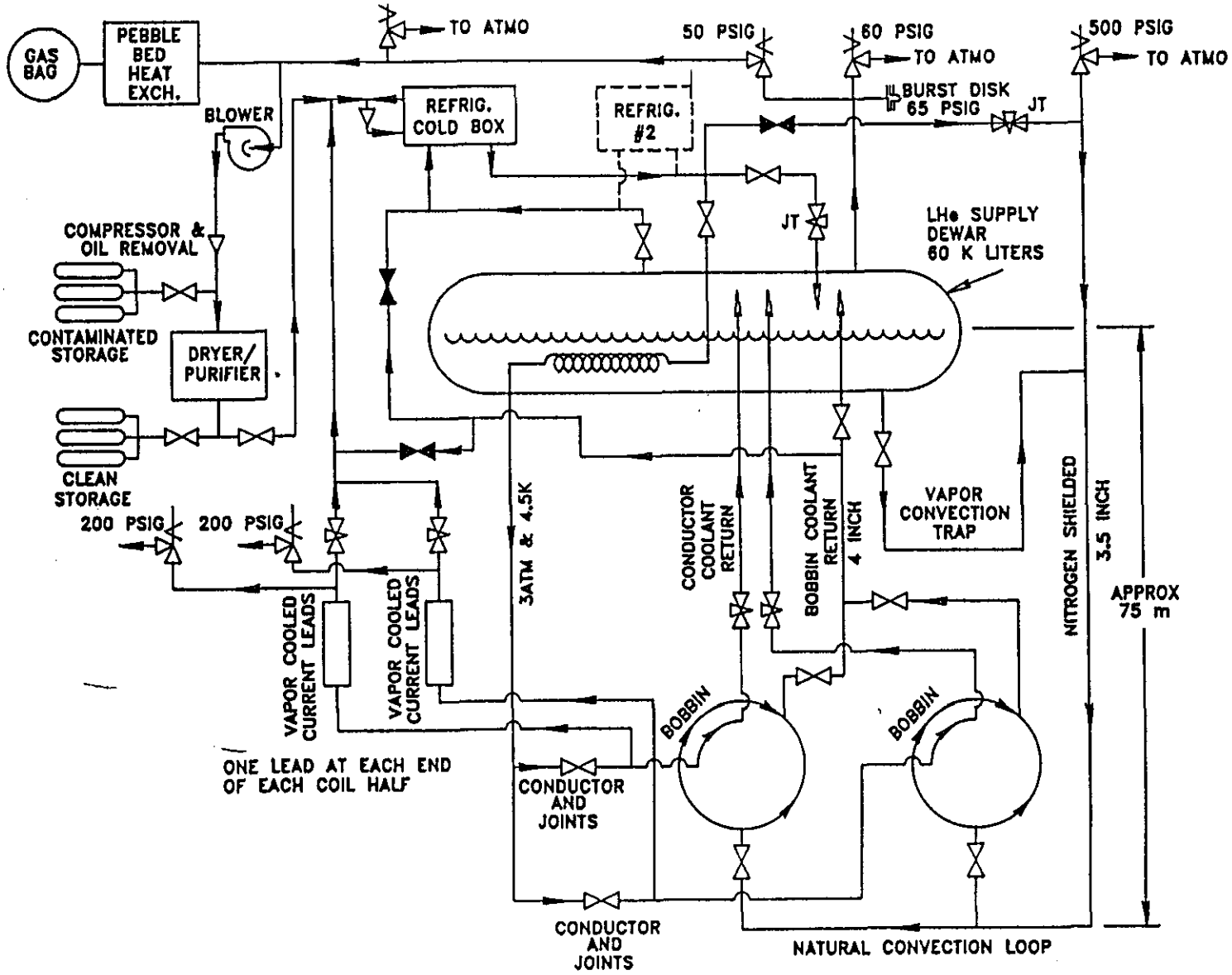

RMY-01
8/7/92

Helium Forced Flow Schematic - Magnet Half

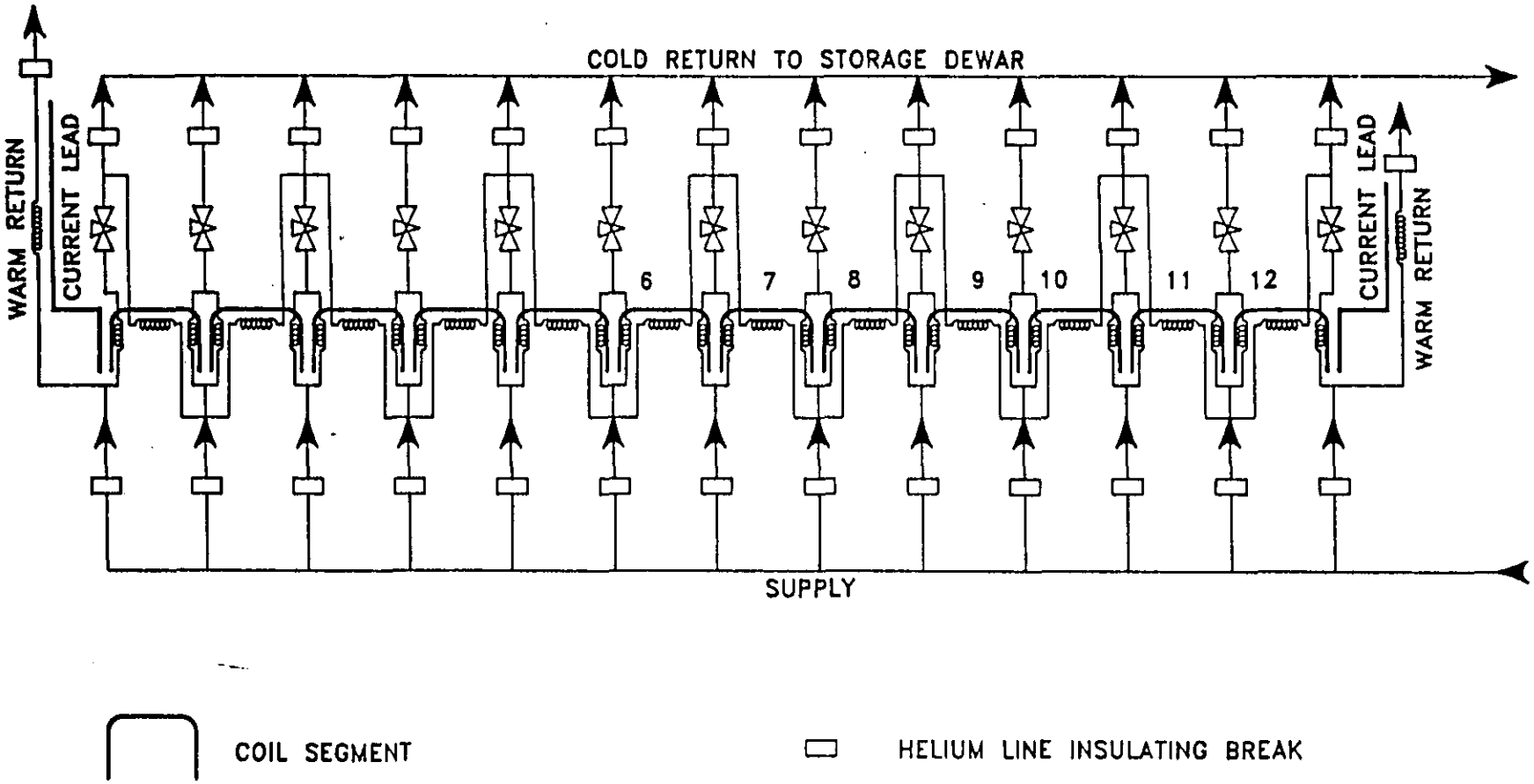

RMY-01
8/7/92

Liquid Nitrogen Flow Schematic

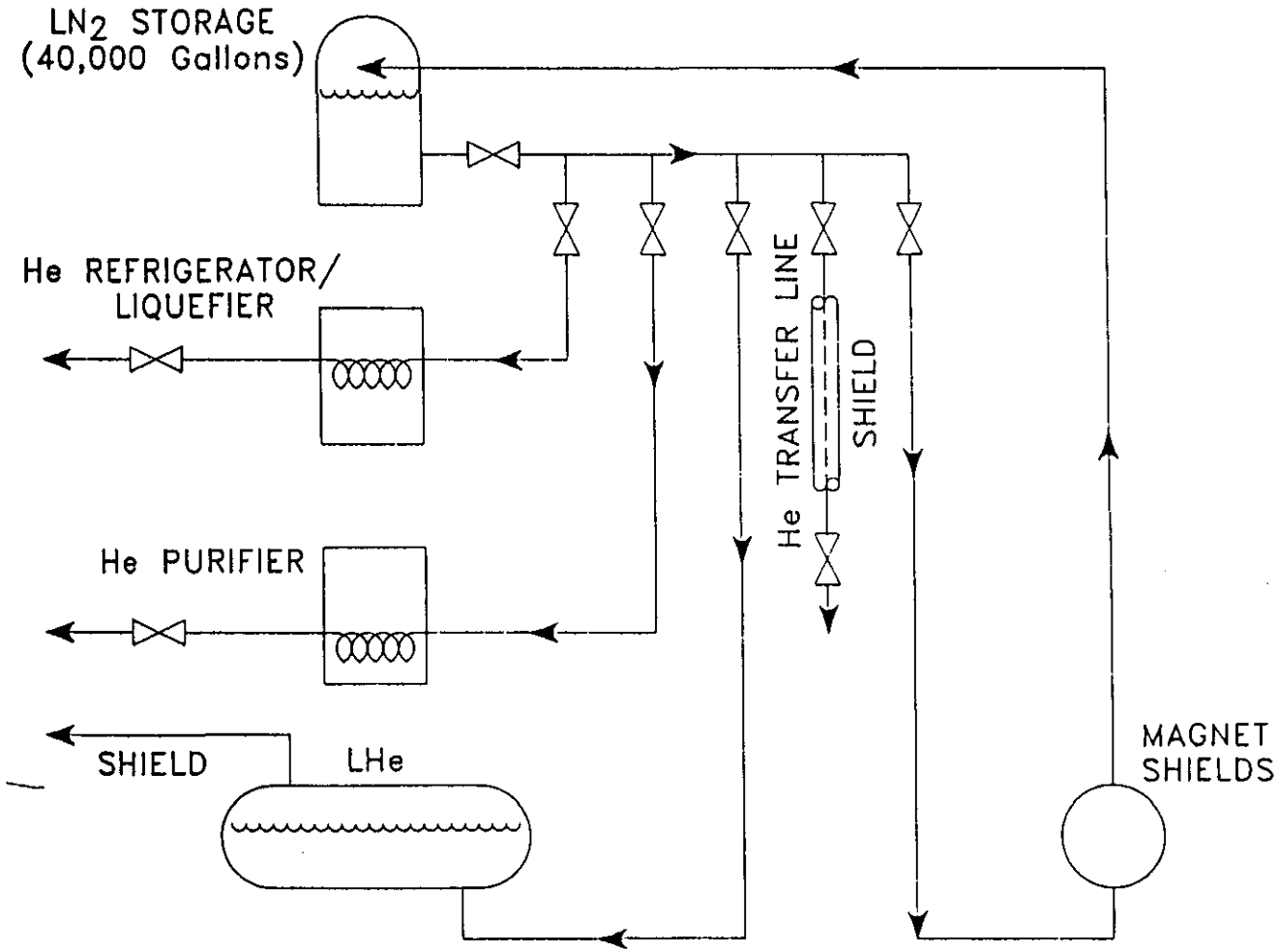

RMY-01
8/7/92

Vendor Briefing

Forward Field Shaper(FFS) Central Detector Support

Joel Bowers

Lawrence Livermore National Laboratory
August 18, 1992

JMB-1
8/13/92

FFS subsystem requirements

- Size, shape, and material chosen for field shaping
- Transportable support structure for detector access
- Axially loaded (3 million pounds) by magnet
- Seismic acceleration

Field shaper description:

- Segmented solid steel cone, bored for beam line
- Tie rod or tension cable stack support
- Cantilevered off support structure into vessel
- Weighs 1000 tons
- 100% low carbon steel (AISI 1006)

Support Structure description:

- 50% low carbon steel
- Stainless steel radial stiffeners and support legs
- Free standing
- Bears on reaction pads on vacuum vessel
- Weighs about 1000 tons

FFS / vacuum vessel interface (not to scale)

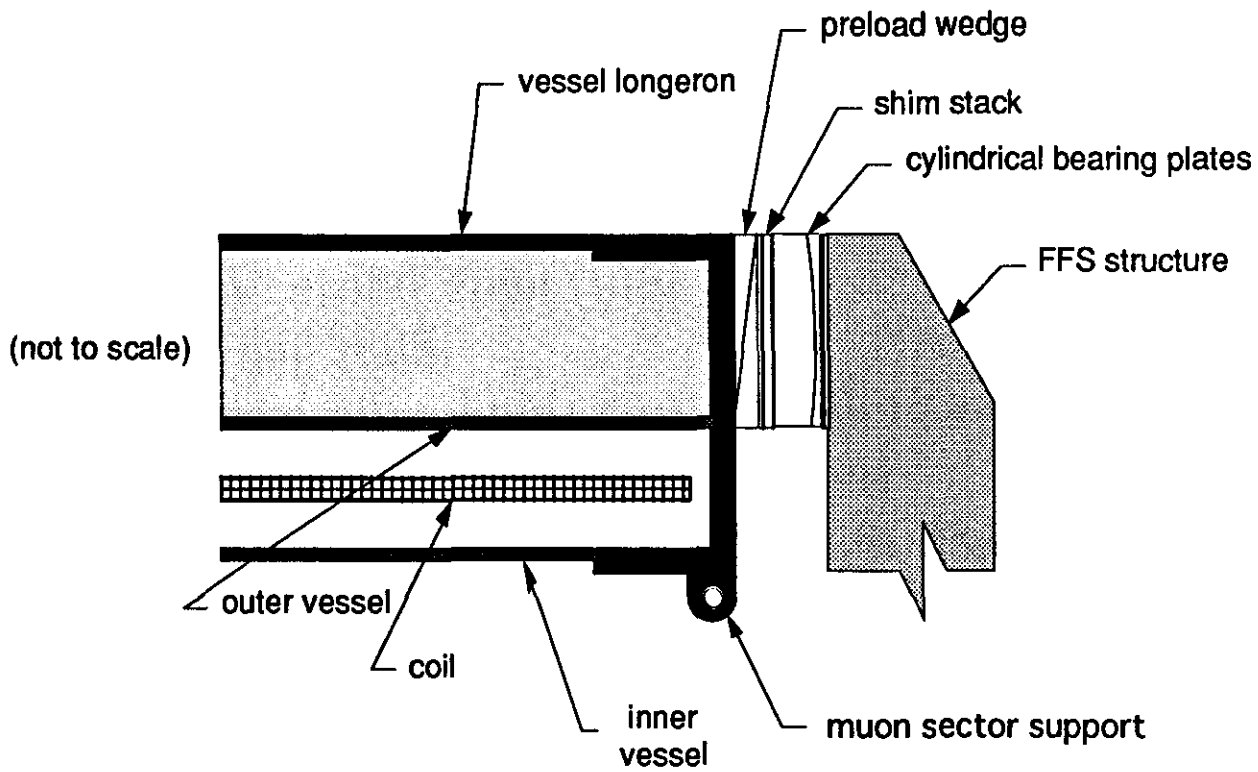

- vessel/ FFS structure interface is preloaded with large wedges, assuring contact at eight load points

JMB-3
8/13/92

FFS finite element model

Analysis by Wally Hsu

Software: Gemini

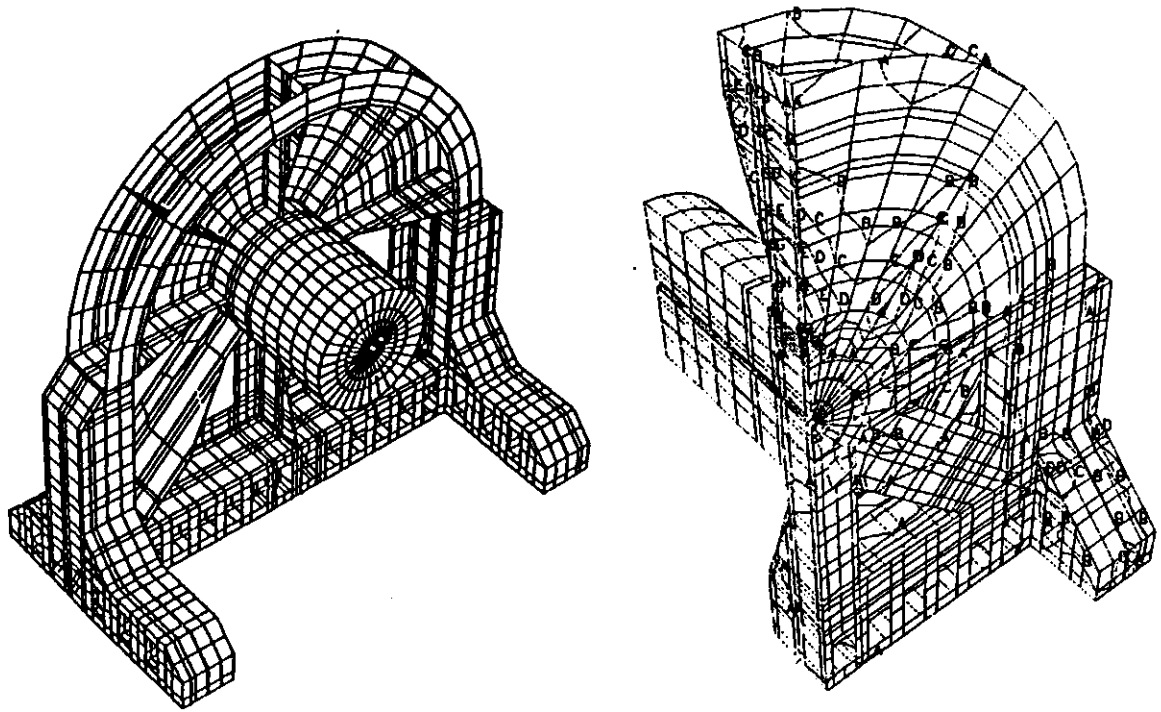

FFS finite element models: Figure on left shows full model for seismic runs. Figure on right shows a stress contour plot on a symmetry model for gravity and magnetic loads

FFS support structure deflections

- **case 1: Free standing structure (static)**

Y (vertical) displacement at end of FFS = -0.66" (down)
Z (axial) displacement at end of FFS = -0.3" (toward interaction zone)
Z (axial) displacement at top of FFS structure = -1.1" (toward interaction zone)

- **case 2: Free standing structure (seismic)**

X (transverse) displacement at end of FFS = +/- 0.1"
Y (vertical) displacement at end of FFS = +/- 0.3"
Z (axial) displacement at end of FFS = +/- 0.46"
Z (axial) displacement at top of FFS structure = +/-0.92"

- **case 3: Assembled with vessel (static)**

Y (vertical) displacement at end of FFS = -0.15" (down)
Z (axial) displacement at end of FFS = -0.05" (toward interaction zone)

- **case 4: Assembled with vessel (magnet on)**

Y (vertical) displacement at end of FFS = 0.001" (down)
Z (axial) displacement at end of FFS = -0.13" (toward interaction zone)

- **case 5: Assembled with vessel (seismic)**

X (transverse) displacement at end of FFS = +/- 0.1"
Y (vertical) displacement at end of FFS = +/- 0.03"
Z (axial) displacement at end of FFS = +/- 0.05"

Forward field shaper cast plate design

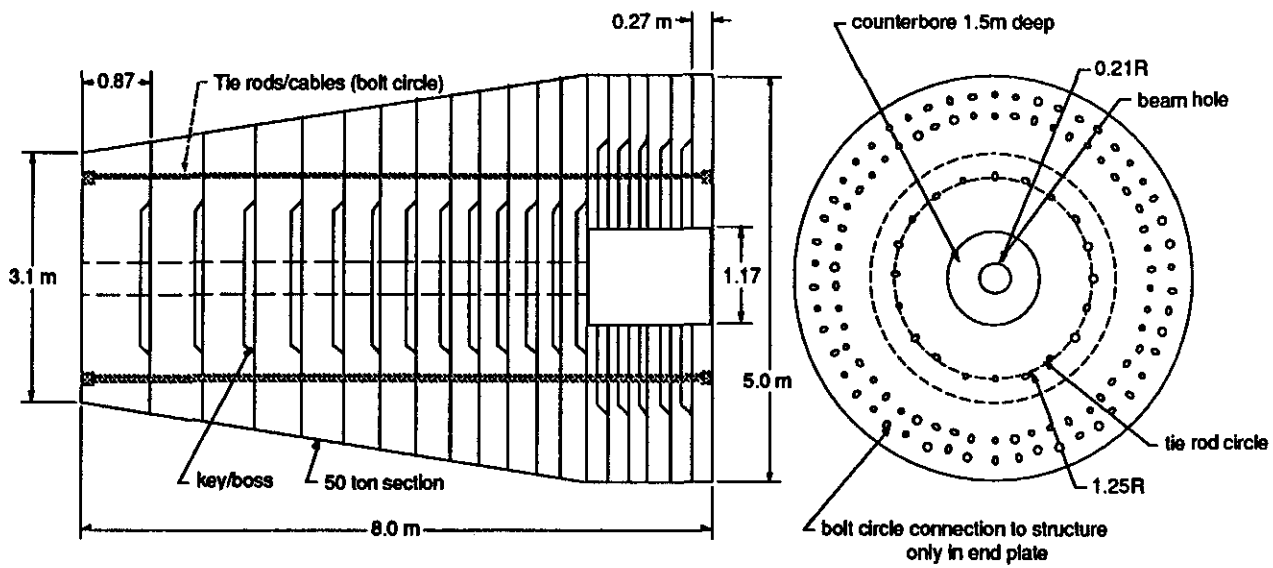

(each section has roughly equal weight)
total weight = 970 English tons

Forward field shaper

- **Interlocking plates provide progressive shear support**
- **Tension rods (or wire rope) compress the stack**

JMB-6
8/13/92

Forward field shaper rolled plate design

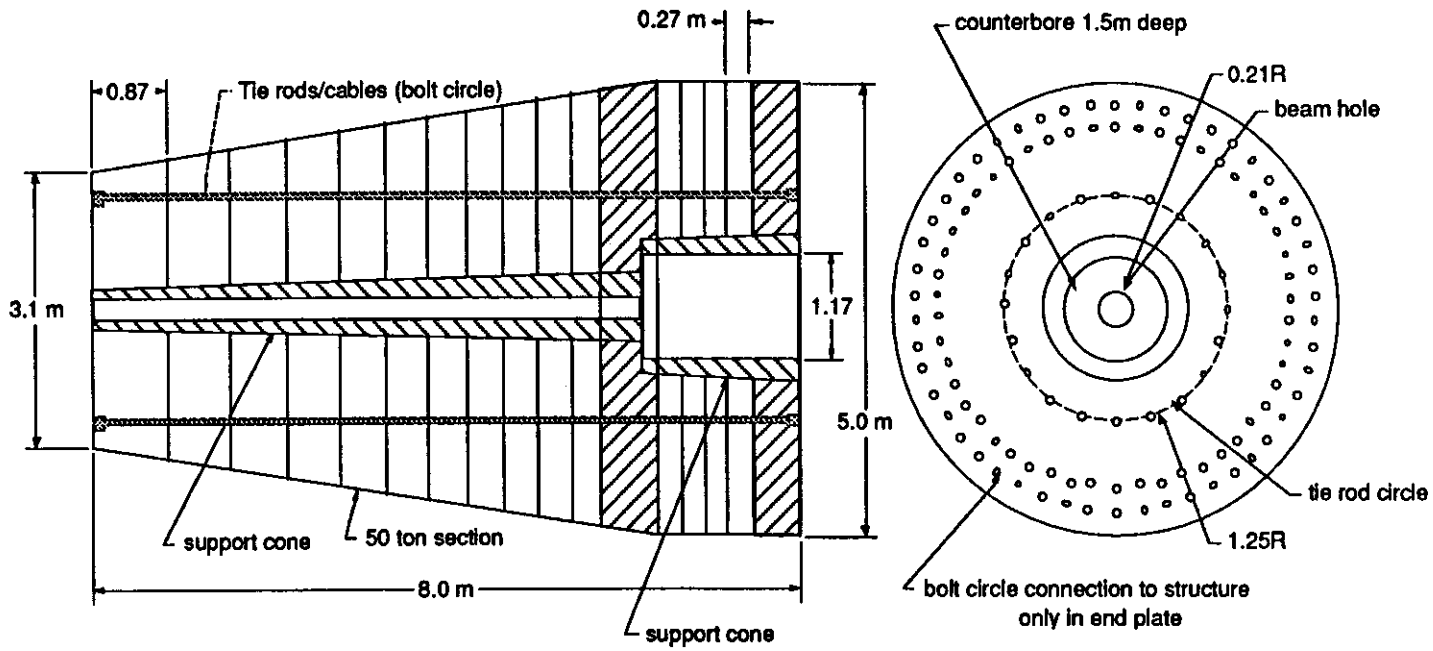

- Currently being costed, compared to cast segment design
- Non interlocking design requires a center support ≈ 5-6" wall

JMB-7
8/13/92

FFS design for off site fabrication

- 20-75 ton sections for shipping
- Machined, bolted joint interfaces fastened during fabrication, requiring serialization of all sections
- Maximum repetition of cut plate shapes
- FFS and structure is completely assembled at the off site location for inspection and fit up
- Bolted joints sized for all load conditions, with little or no on site welding required.

Central detector support requirements

Responsible engineer: Brian Smith

- Central calorimeter support
- Central tracker support
- Provide dead load and seismic stability
- Tight alignment tolerances, still in negotiation

Some physical constraints

- Barrel muon sectors constrain space to a membrane structure
- Delivery shaft into hall
- Space between magnets constrains space between vessels
- Internal clearance for cables, pipes
- Leg room clearance with vacuum vessel

Some membrane design parameters

- Double membrane, internal radial webs
- Independent support structure
- Central cylinder holds central detector (2000 tons)
- Mostly low carbon steel, A36
- Stainless steel radial stiffeners and support saddle
- Each membrane
  - 4" thick
  - 23 m (75.4 ft) overall outside diameter
- Total membrane assembly weight is about 3000 tons

JMB-11
8/13/92

Focus of membrane design efforts

- membrane/vessel interface

- Structural analysis
- characterized baseline design stresses and deflections
- studied feasibility of a minimum, non-axisymmetric structure

- Transport, construction, and alignment options

- Utility paths for central detector components

FFS finite element model

Analysis by Brian Smith

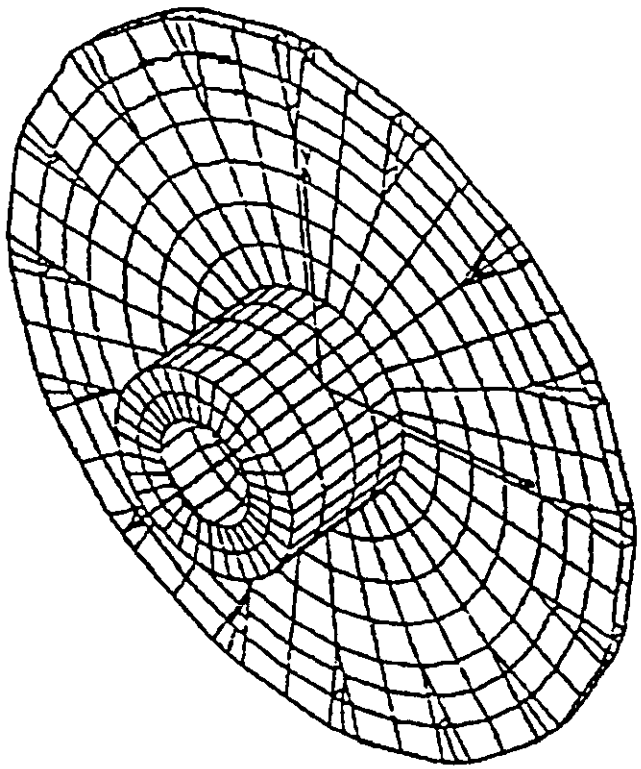

Model of full membrane concept

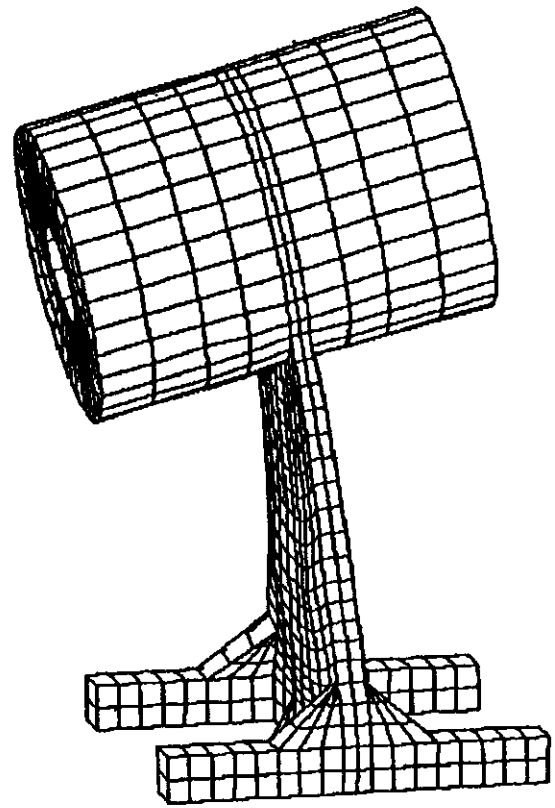

Model of pedestal support concept

JMB-13
8/13/92

Superconducting Super Collider

Vacuum Vessel, Transporter and Magnet Assembly Update

Allen House
Wally Hsu
Joel Bowers
Lawrence "Buzz" Pedrotti
Sarah Wineman

Lawrence Livermore National Laboratory
August 18,1992

Outline

In this talk I will summarize the design changes that have occurred since the April vendor briefing:

- Vacuum vessel design and analysis
- Magnet and FFS transporter concept
- Magnet assembly baseline

Vessel end view

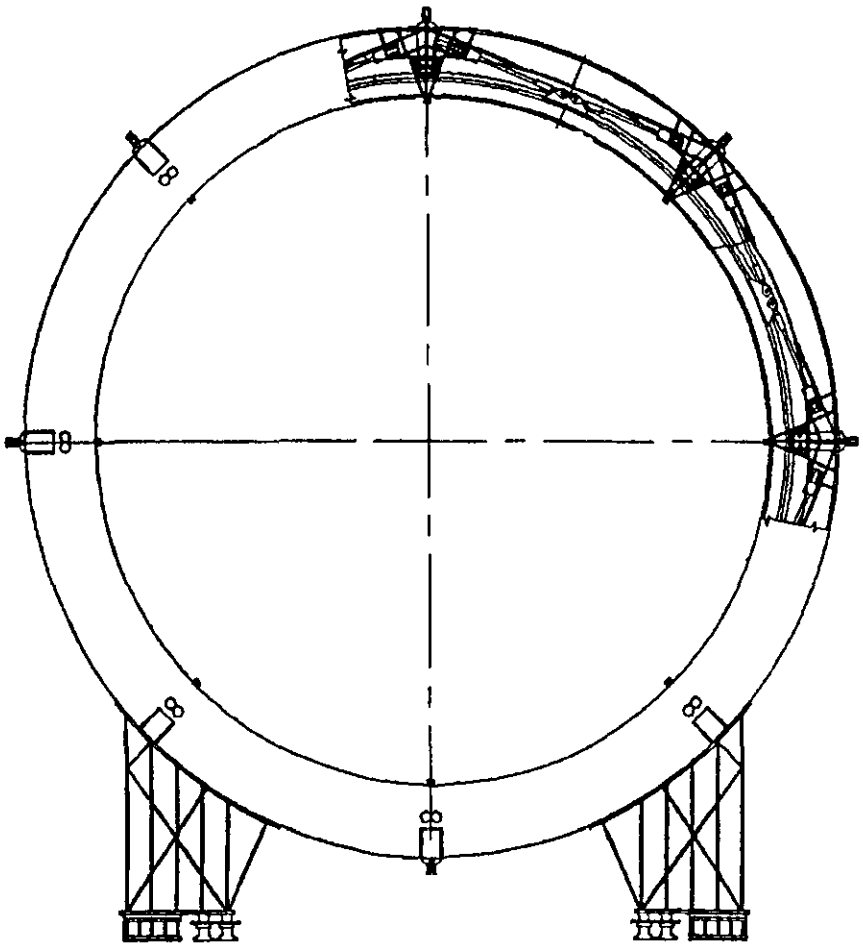

JMB-2
8/13/92

Vessel subsystem requirements

1 Cryostat
- provides vacuum insulation for cold magnet
- 10^{-5} torr vacuum compatible design

2 Magnet support structure
- structural support for magnet coil and N_2 shields
  - cool down loads: shrinkage of cold mass
  - magnetic loads: axial and radial
  - static and seismic loads
- muon detector support
  - 16 sectors, each weighing 10 tons
  - hang from vessel end rings
  - alignment, stability, drift requirements
- field shaper support
  - axial load of 3 million pounds
- central membrane support
  - axial stability for transient response

JMB-3
8/13/92

Some physical constraints

- Underground hall length
- Delivery shaft into hall
- Rigging limitations
- Internal clearance for LN cooled thermal shields
- End clearance for central membrane
- Leg room for vessel, central membrane, and FFS support
- ID of inner vessel clear for muon sectors

Primary axial loads

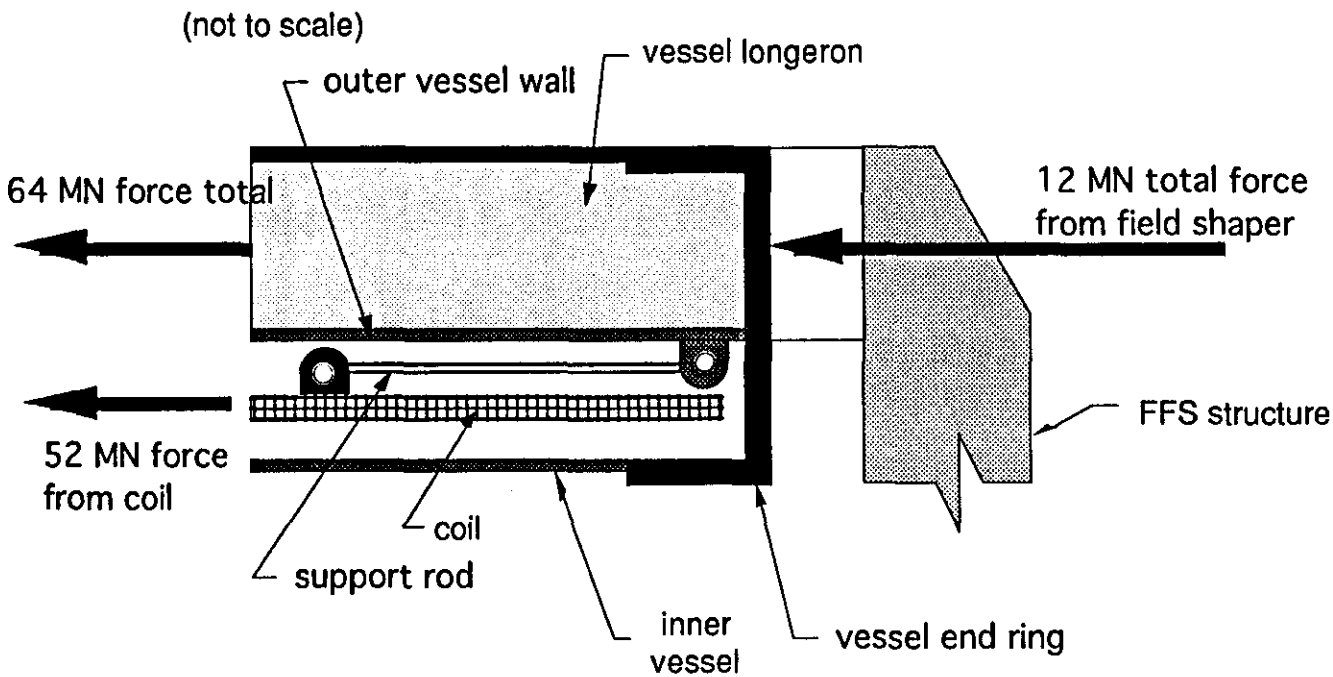

Axial loads are carried through the vessel by the eight external axial columns, or "longerons"

JMB-5
8/13/92

Some vessel design parameters

- Annular vacuum vessel for operation pressure of 10^{-5} torr
- Outer shell: external pressure, 1" wall, 10 stiffening rings
- Inner shell: internal pressure vessel, 1" wall, no stiffeners
- Low carbon steel, SA516 gr 70 vessel wall
- Two vessels
  - each 900 tons
  - each 15 meters (50 ft) long
  - each 21.8 m (71.5 ft) overall outside diameter
  - each independently mounted
  - each transportable

JMB-6
8/13/92

Vessel cross section arrangement (end)

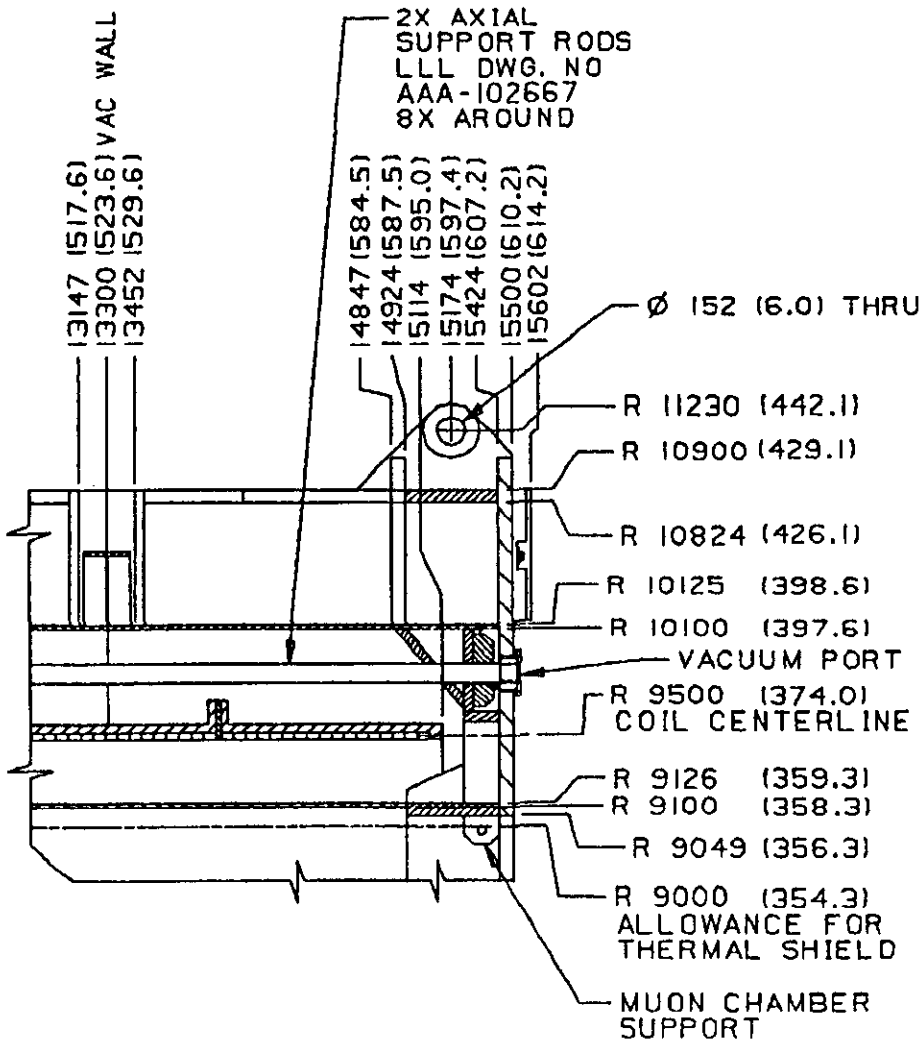

JMB-7
8/13/92

Vessel end view detail

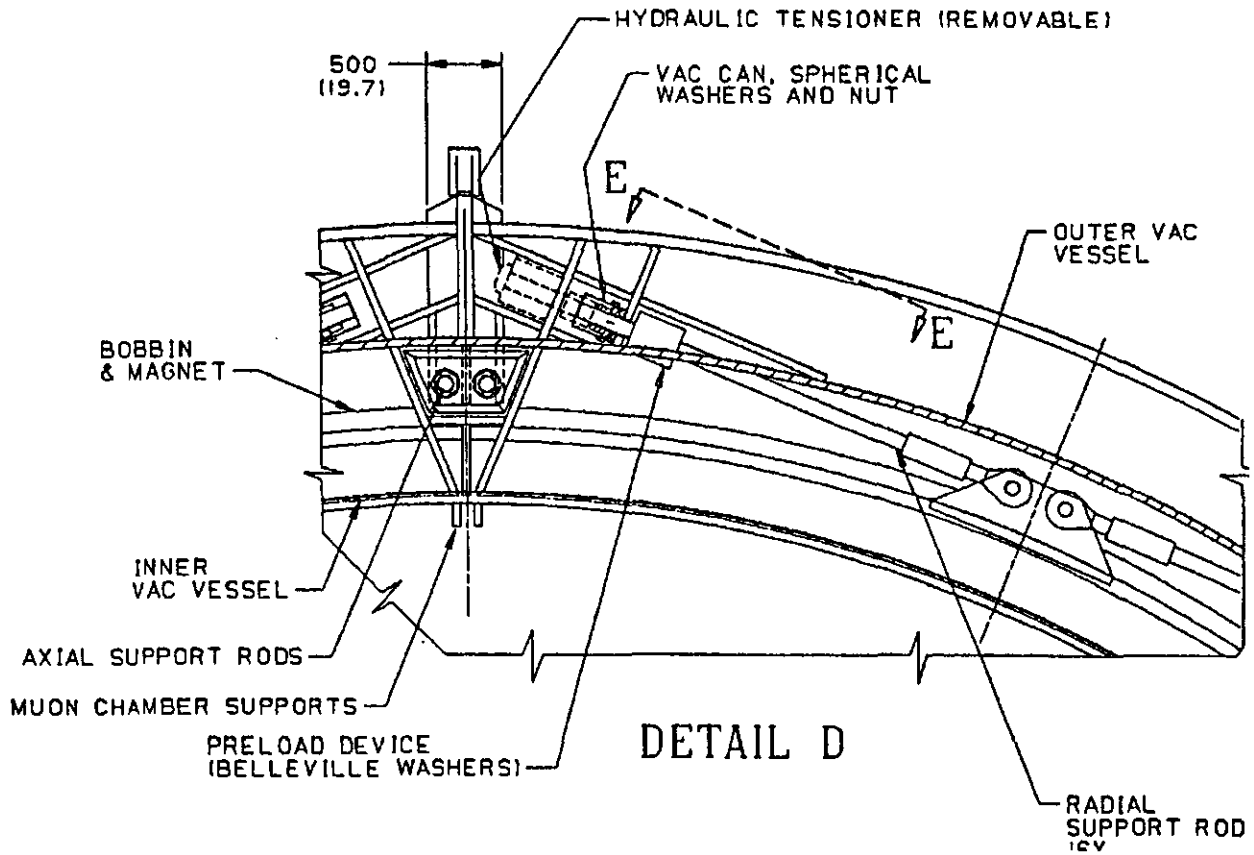

JMB-8
8/13/92

Vessel design changes since last vendor briefing

- Outer vessel wall was 2" thick, is now 1" thick
- Outer wall was stiffened by one 30" deep ring, is now stiffened by 10 - 16" deep rings
- Outer vessel parting line moved due to access port conflict
- Coil access ports added between circumferential stiffeners
- External axial stiffeners thickened to make for thinner outer vessel wall
- Alignment ports added to sight on coil/ axial support rods
- 4 - 24" ports added for high vacuum pumps
- End ring stiffener design completed to interface support rods

JMB-9
8/13/92

Vessel support block

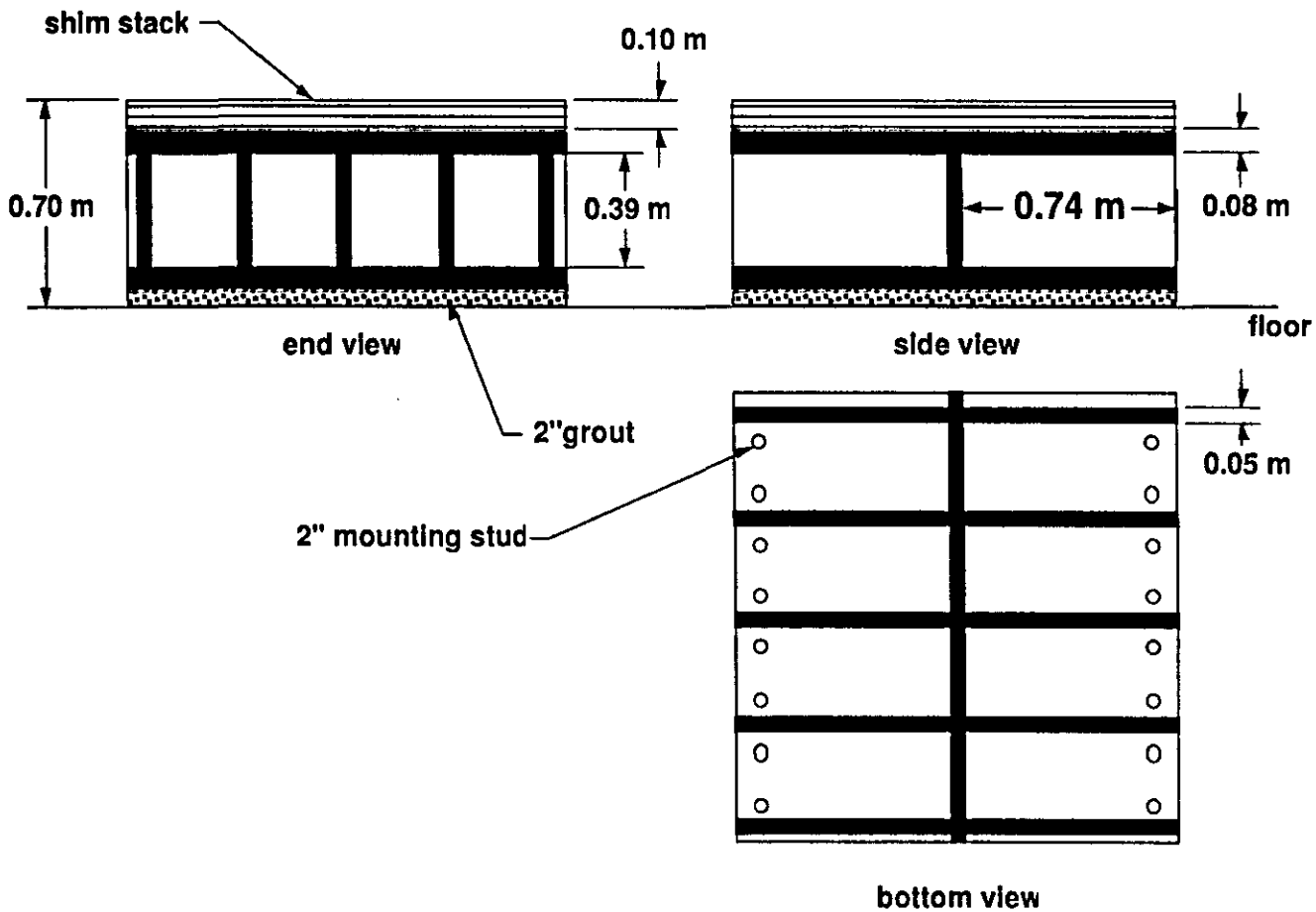

JMB-10
8/13/92

Outer vessel section construction (40 plates)

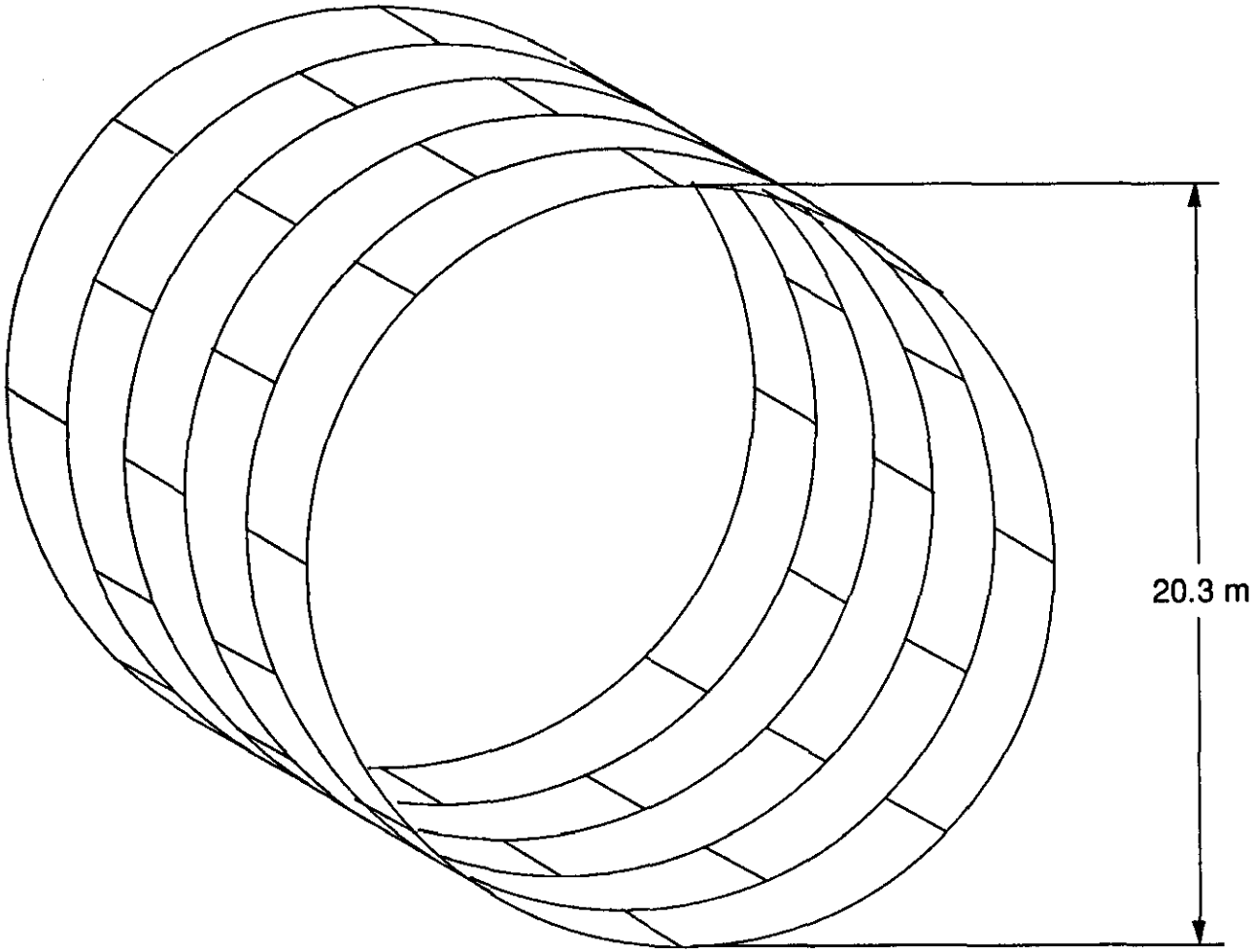

JMB-11
8/13/92

Vessel finite element analysis

Analyses by Dorothy Ng, Allen House
Software: Gemini, Mechanica

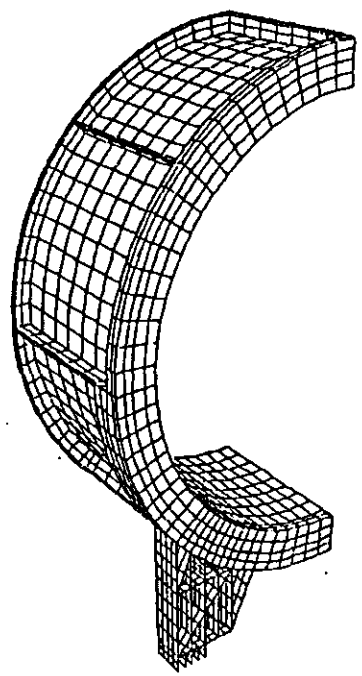

- Three primary models :

Two converging global models, one local model

Global models include bobbin and rods

Local model contains ring gusset details

JMB-14
8/13/92

Muon support deflection (vessel end ring)

Summary of global model results

Sag of vessel end ring due to gravity:
12 o'clock vertical sag = 0.24"
3 & 9 o'clock horizontal expansion = 0.12"
3 & 9 o'clock vertical sag = 0.05"
3 & 9 o'clock Z rotation = 4.8×10^{-4} radians

Sag of vessel end ring due to other loads combined:
12 o'clock vertical sag = 0.04"
3 & 9 o'clock horizontal contraction = 0.02"
3 & 9 o'clock vertical sag = 0.01"
3 & 9 o'clock Z rotation = 7.4×10^{-5} radians

maximum radial rod load (all load cases combined) = 600,000 lb
maximum axial rod load (magnetic load) = 750,000 lb
Maximum Z rotation on ID of vessel end ring = 8×10^{-4} radians

Summary of local model results (not including gravity)

Maximum Y displacement = 0.032"
Maximum X displacement = 0.011"
Maximum Z rotation = 2.3×10^{-3} radians

General Description (vacuum system)

BASIC SYSTEM

Roughing system
- 2- 4000 CFM roots blowers
- Backed by a 300 CFM mechanical pump
- 2 Refrigerated traps
- 2 - 12" gate valves for roots blowers

High vacuum system
- 4 - 24" diffusion pumps
- nitrogen traps above diffusion pumps
- 4 - 24" poppet valves for diffusion pumps

- Backed by one 300 CFM mechanical pump

Control system

JMB-16
8/13/92

Standards and Specifications (vessel)

- A Fabrication Specification will control the procedures and materials used in vessel and structural construction

- ASME Code stamp is not required, however

Project will follow controls and certifications consistent with the Code, including:

welder qualifications (WQR's)
weld procedure qualifications
inspector certifications
material records (CMTR's)
dimensional inspections
NDE certifications
QA program plan

Vessel transport system

- One modular transporter unit at each vessel saddle leg
  - 900 ton lifting and moving capacity each

- Each transporter
  - contains 6 ea 150 ton jacks
  - horizontal motion element: grease pads or Hillman rollers

- Grease pad characteristics
  - low friction
  - two direction horizontal motion
  - no track required
  - makes a mess
  - needs pumping system
  - need smaller driver

- Roller characteristics (Hillman or rail car truck)
  - conventional and clean
  - higher friction than grease pad
  - one direction movement
  - requires track
  - needs big driver

JMB-12
8/13/92

Track sections anchor transporter rams

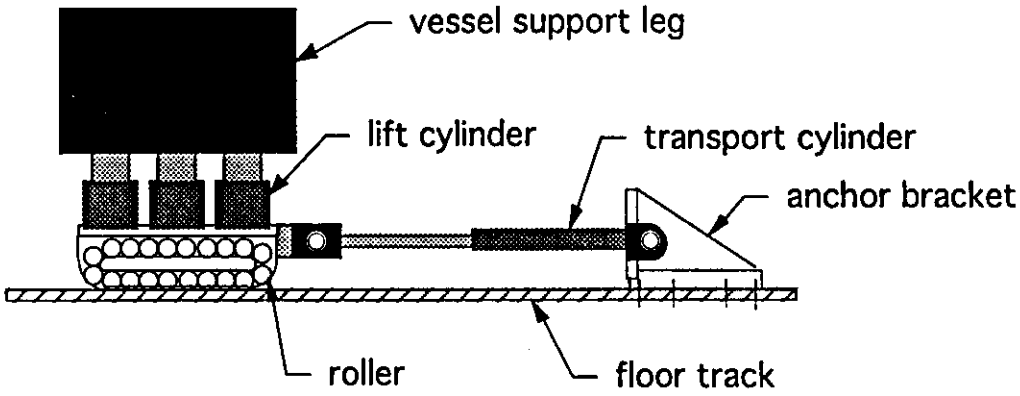

Ram drive system based on one used at D_O and CDF (Fermilab)

JMB-13
8/13/92

UNLESS OTHERWISE SPECIFIED:

1. ALL DIMENSIONS ARE IN INCHES.
2. DIMENSIONING AND TOLERANCING PER ANSI Y14.5M-1982.
3. SURFACE TEXTURE PER ANSI B46.1-1978.
8. LLNL/AutoCAD(tm) Release 11 USER FILENAME: 21010951.DWG

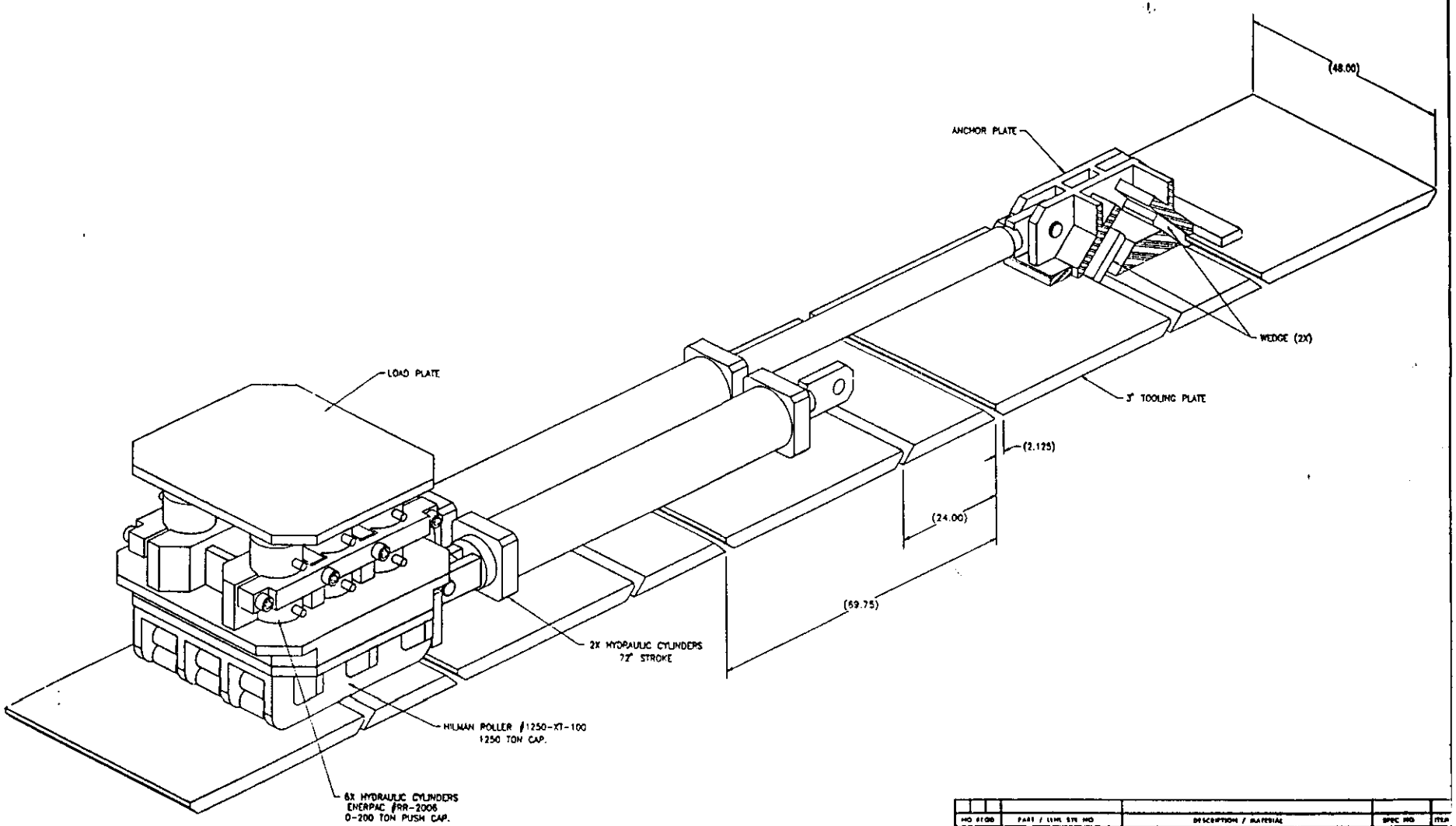

NO REQD	PART / LLNL STK NO	DESCRIPTION / MATERIAL	SPEC NO	ITEM
	DWN W J WONG 7/92	CLASSIFICATION		
	CHK W J WONG 7/92	THIS DOCUMENT IS THE PROPERTY OF THE UNIVERSITY OF CALIFORNIA LAWRENCE LIVERMORE NATIONAL LAB. REPRODUCTION AND/OR REPORT PERMISSION OF THE MECHANICAL OVERSTRESS DEPARTMENT.		
	APVD J. BERKEY 7/92			

LAWRENCE LIVERMORE NATIONAL LABORATORY
MECHANICAL ENGINEERING DEPT
UNIVERSITY OF CALIFORNIA

GENERAL REV.

GEM

TRANSPORT SYSTEM

CRAWLER CONCEPT

DRAWING NO AAA92-101095-0A

SCALE

SHEET 1 OF 1

Purpose of Coil Assembly

- Place components in the final position in the vessel
- Carry out acceptance tests at ground level
- Prepare for installation into the detector hall

Assembly requirements

General
- Safe
- Predictable
- Within state-of-the-art

Vacuum
- Leak-rate
- Cleanliness
- Final test prior to installation in detector hall

Facility Constraints

- IR5 site
- Vessel fabrication outside
- High-lifts must be outside

Schedule
- Complete two assemblies in 9 months

VG-GEM-92-010-5
6/20/92

Desirable Features

Assembly sequence
- Assembly in clean, covered areas
- Welding in preferred orientations
- Welding is not carried out near the coil
- Component assembly in preferred orientations
- Parallel and flexible assembly steps
- Assembly steps that are reversible

Handling
- Minimum number of lifts
- Low lifts
- Lowest mass lifts
- Good visibility

Verification
- Leak-hunting that is systematic and sequential
- Success of each assembly step can be verified
- Verification occurs as close to design conditions as possible

Least expensive approach
- Use existing components

Options considered

The number of components and alternate fabrication methods lead to many permutations.

For the vessel and coils, these can be grouped into:

- Axes horizontal construction and assembly
- Axes vertical construction and assembly
- Axes vertical construction and axes horizontal assembly

Variations exist for;

- Uprighting: coil segments or half coil
- Vessel construction: hoop or clamshell
- Attachment points for the LN shields: coil or vessel
- Handling: existing structures or specialty rigging
- Leak-detection: each step or in groups

Components to be assembled

- An annular 940 ton vacuum vessel
- 12 - 44 ton coil segments including sensors
- 32 - 1.5 ton thermal shields, and LN piping
- 16 - 10cm x 7m axial support rods, thermal shunts and sensors
- 32 - 10cm x 4m radial support rods, thermal shunts and sensors
- 2 - Vapor cooled leads and sensors
- 4 - LHe circuits including:
  - distribution piping
  - flow-control valves for joints
  - flowmeters
  - temperature sensors
  - insulating breaks

NOTES
UNLESS OTHERWISE SPECIFIED:

1. ALL DIMENSIONS ARE IN INCHES.
2. DIMENSIONING AND TOLERANCING PER ANSI Y14.5M-1982.
3. SURFACE TEXTURE PER ANSI B46.1-1978.

Components to be assembled

An annular 940 ton vacuum vessel

12–44 ton coil segments including sensors

32–1.5 ton thermal shields, and LN piping

16–10cm x 7m axial support rods, thermal shunts and sensors

32–10cm x 4m radial support rods, thermal shunts and sensors

2– Vapor cooled leads and sensors

4– LHe circuits including:
- –distribution piping
- –flow–control valves for joints
- –flowmeters
- –temperature sensors
- –insulating breaks

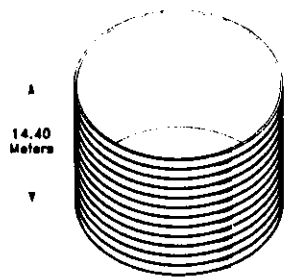

Half Coil Assembly
520 Metric Tonnes

1. Lift from below on special jacking fixture
2. Slide new segment under
3. Bolt bobbins
4. Make conductor joint
5. Install voltage taps, etc (Repeat 12 times...)
6. Certify ready for assembly
7. Secure far movement
8. Protect from weather

Step 1

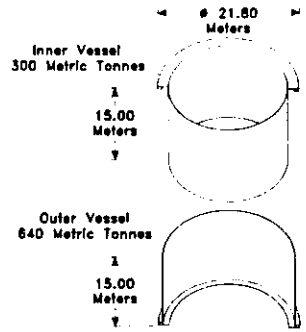

1. Erect vessels with axes vertical
2. Weld demountable joint and leak hunt
3. Acceptance test
4. Disassemble
5. Certify for rigging

Step 2

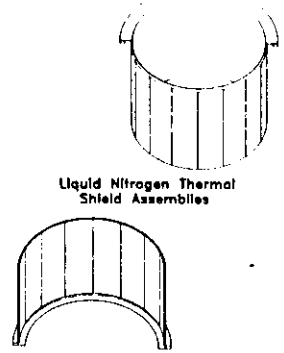

Liquid Nitrogen Thermal Shield Assemblies

1. The LN panels will be cold certified at the factory
2. Mount the panels on the inner and outer vessel shells
3. Install LN plumbing
4. Leak hunt the assemblies
5. *Optional – close the vessels and cold shock the assembly
6. Certify ready for assembly

Step 3

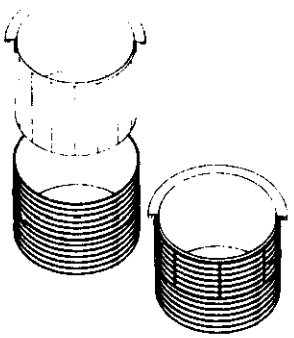

820 Metric Tonnes

1. Certify for assembly
2. Move to assembly pad
3. Rigging readiness review
4. Lift inner vessel into the coil half (≈ 10cm clearance)
5. Move back inside
6. Install & tension upper radial and axial rods
7. Install inner LHe piping & sensors

Step 4

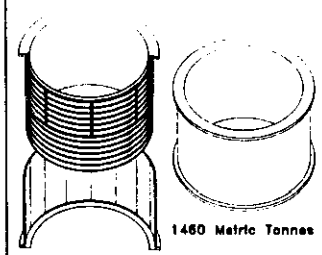

1460 Metric Tonnes

1. Certify for assembly
2. Move to assembly pad
3. Rigging readiness review
4. Lift inner assy. into the outer vessel (≈ 10 cm clearance)
5. Move assembly inside
6. Install & tension lower radial rods
7. Install remaining LHe piping & sensors
8. Weld final closure welds

Step 5

1. Install temporary cold mass supports
2. Move to the assembly pad
3. Rigging readiness review
4. Upright the magnet
5. Inspect
6. Leak hunt
7. Cold test
8. Prepare for installation

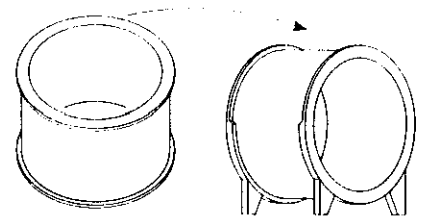

1500 Metric Tonnes

Step 6

NO REQD	PART / LLNL STE NO	DESCRIPTION / MATERIAL	SPEC NO	ITEM

DWN 8/82
CHK 8/82
APVD 8/82
CLASSIFIED BY
TITLE DATE

LAWRENCE LIVERMORE NATIONAL LABORATORY
MECHANICAL ENGINEERING DEPT
UNIVERSITY OF CALIFORNIA

CLASSIFICATION

THIS DOCUMENT IS THE PROPERTY OF THE UNIVERSITY OF CALIFORNIA LAWRENCE LIVERMORE LABORATORY REPRODUCTION PROHIBITED WITHOUT PERMISSION OF THE MECHANICAL ENGINEERING DEPARTMENT

MAJOR UNIT: GEM
SUBASSY: AXIS VERTICAL ASSY
DETAIL: SCHEMATIC
DRAWING NO: AAA92-102733-00
SCALE: 1 OF 1

Assemble the Half Coil

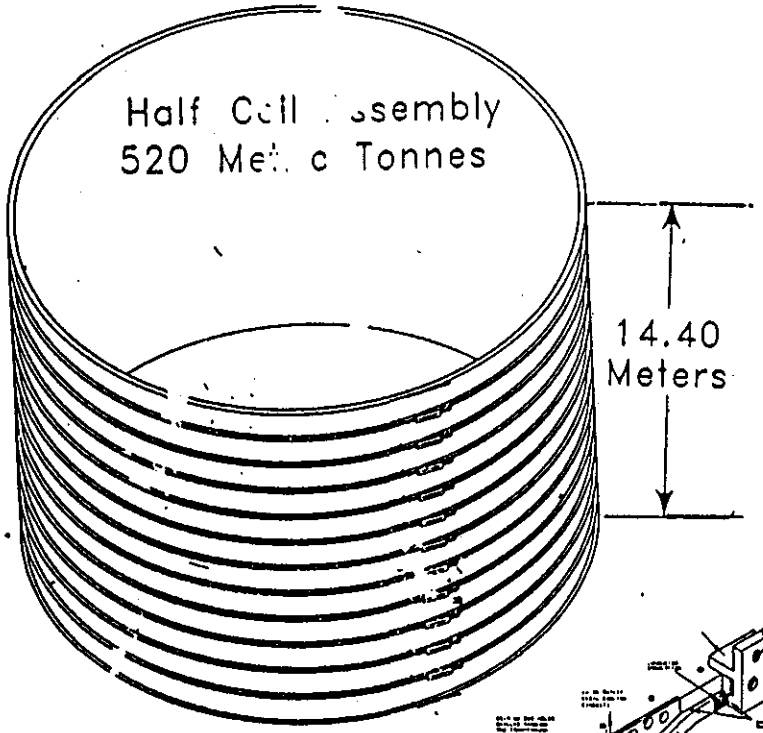

In the assembly building

1. Lift from below on special jacking fixture.
2. Slide new segment under
3. Bolt bobbins
4. Make conductor joint
5. Install voltage taps, etc (Repeat 12 times...)
6. Certify ready for assembly
7. Secure for movement
8. Protect from weather

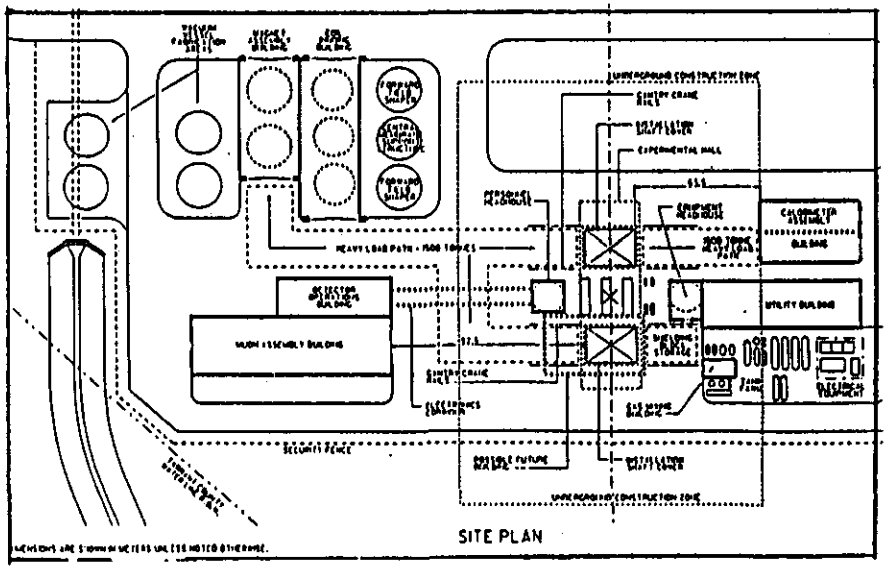

VG-GEM-92-010-11
6/20/92

Fabricate, Accept and Disassemble Vacuum Vessel

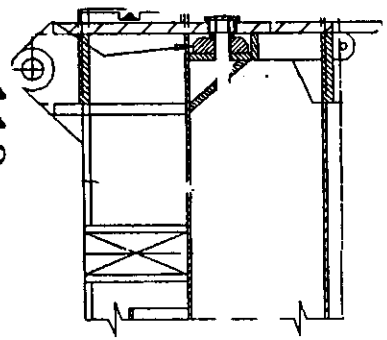

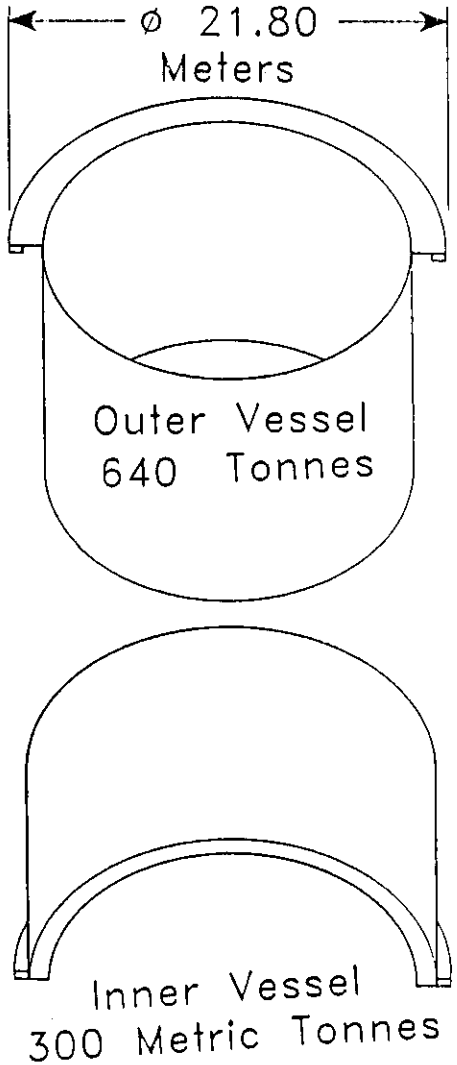

On the assembly pad

1. **Erect vessels with axes vertical**
2. **Weld demountable joint and leak hunt**
3. **Acceptance test**
4. **Disassemble**
5. **Certify for rigging**

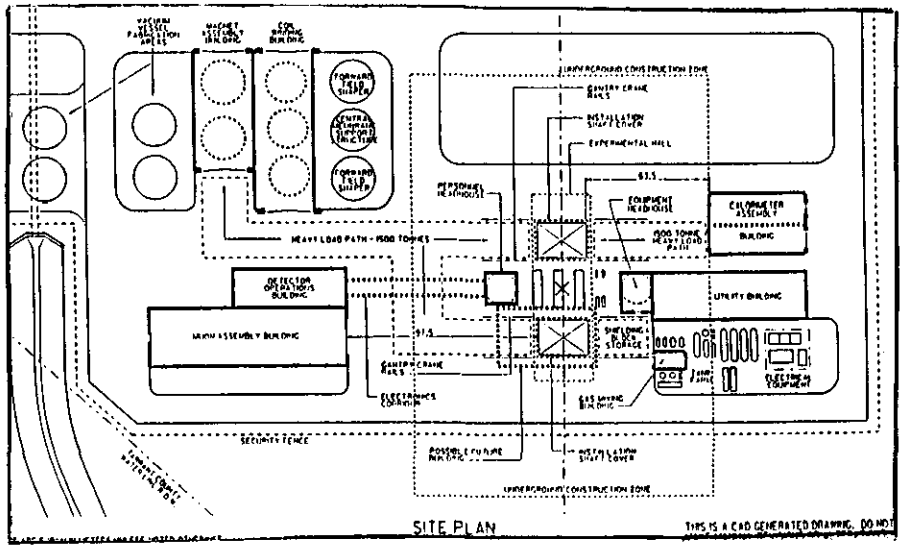

VG-GEM-92-010-12
6/20/92

Mount, Leak Check and Cold Shock* the Thermal Shields in the Vacuum Vessel

Liquid Nitrogen Thermal Shield Assemblies

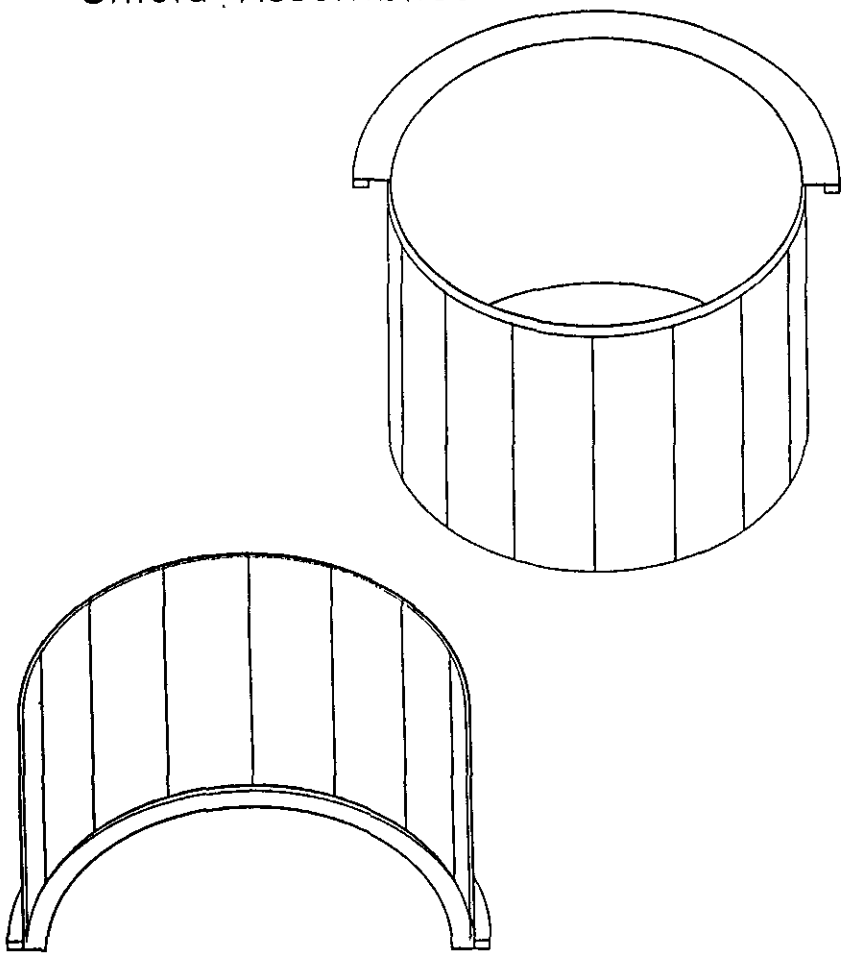

On the assembly pad:

1. The LN panels will be cold certified at the factory
2. Mount the panels on the inner and outer vessel shells
3. Install LN plumbing
4. Leak hunt the assemblies
5. * Optional - close the vessels and cold shock the assembly
6. Certify ready for assembly

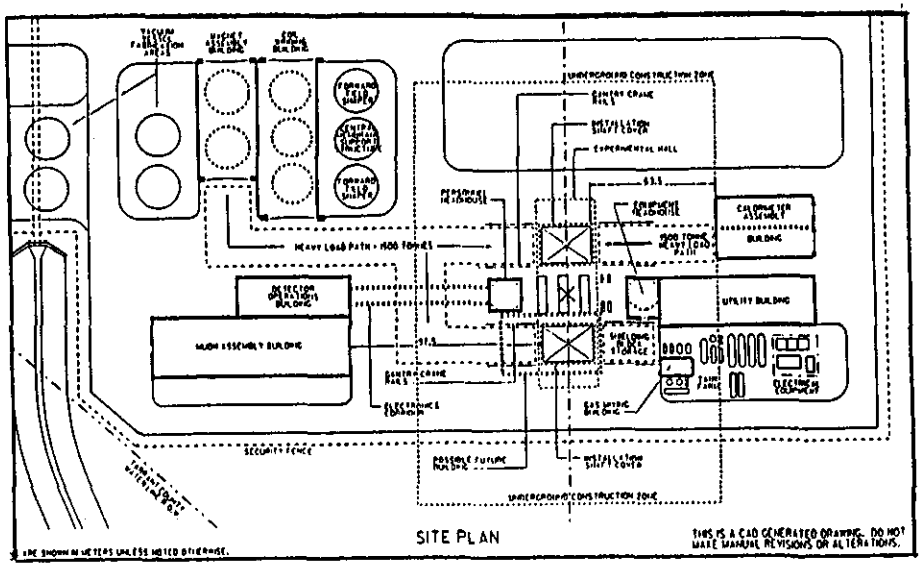

VG-GEM-92-010-13
6/20/92

Insert the inner vessel into the coil half

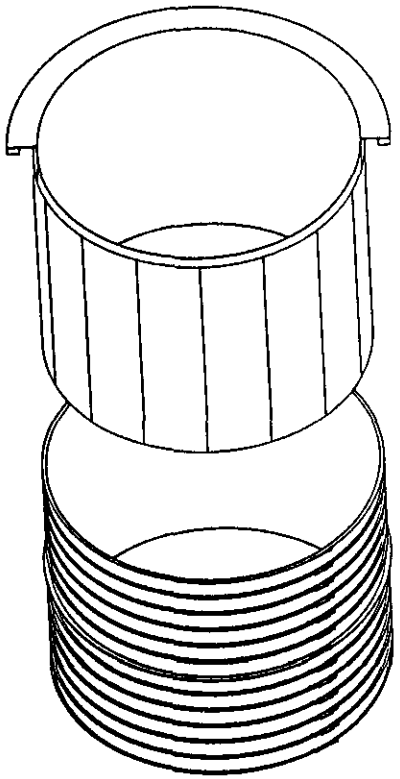

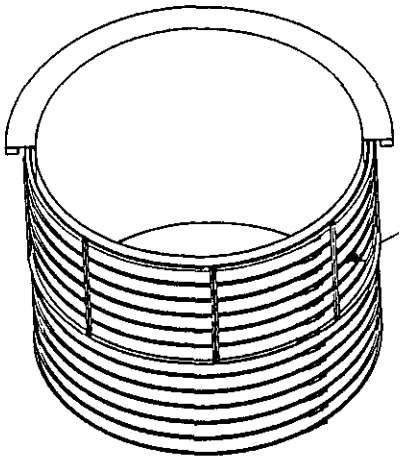

820 Metric Tonne

On the assembly pad

1. Certify for assembly
2. Move to assembly pad
3. Rigging readiness review
4. Lift inner vessel into the coil half (≈ 10cm clearance)
5. Move back inside
6. Install & tension upper radial and axial rods.
7. Install inner LHe piping & sensors

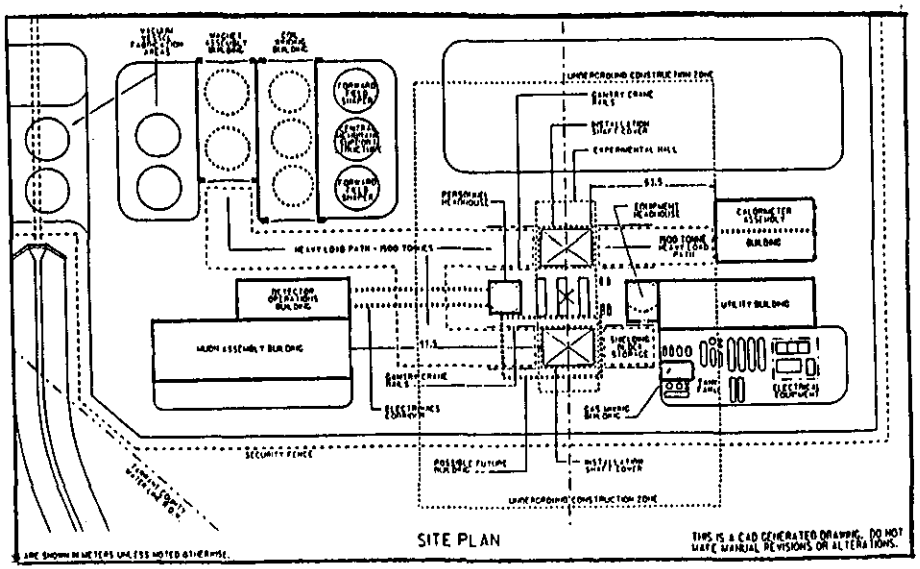

VG-GEM-92-010-14
6/20/92

Insert the inner assembly into the outer vessel

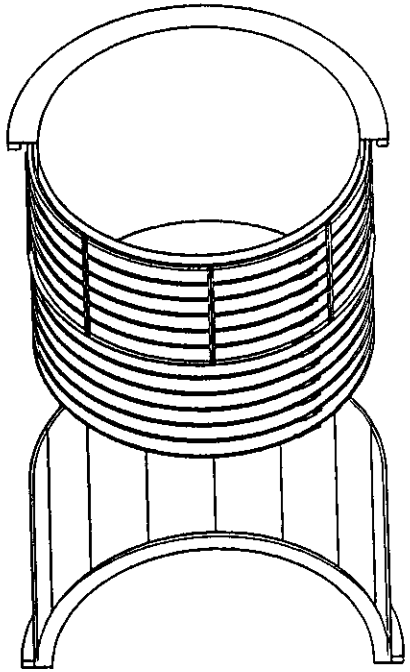

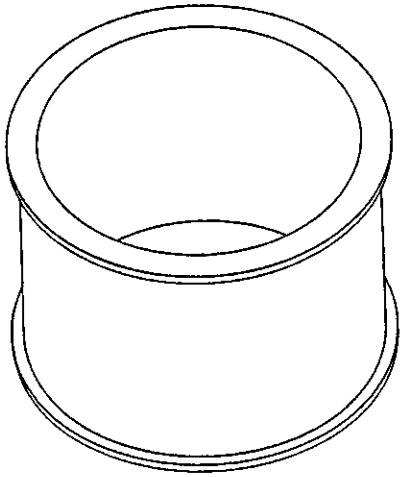

1460 Metric Tonnes

On the assembly pad

1. Certify for assembly
2. Move to assembly pad
3. Rigging readiness review
4. Lift inner ass'y into the outer vessel (≈ 10cm clearance)
5. Move assembly inside
6. Install & tension lower radial rods
7. Install remaining LHe piping & sensors
8. Weld final closure welds

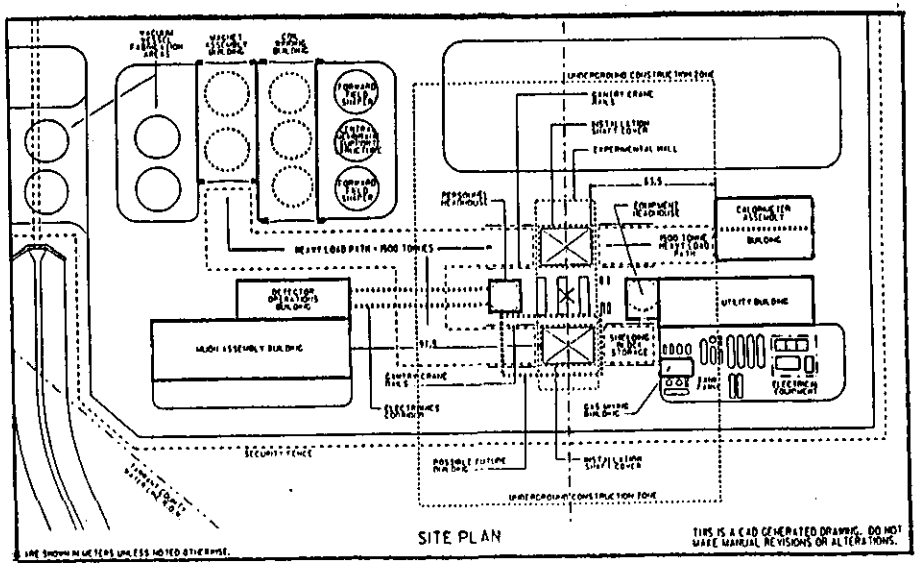

VG-GEM-92-010-15
6/20/92

Upright the assembly

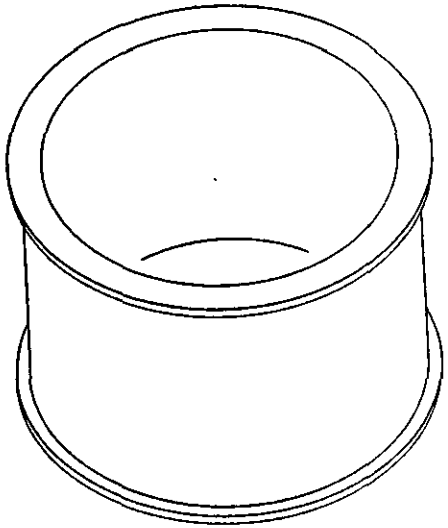

On the assembly pad

1. Install temporary cold mass supports
2. Move to the assembly pad
3. Rigging readiness review
4. Upright the magnet
5. Inspect
6. Leak hunt
7. Cold test
8. Prepare for installation

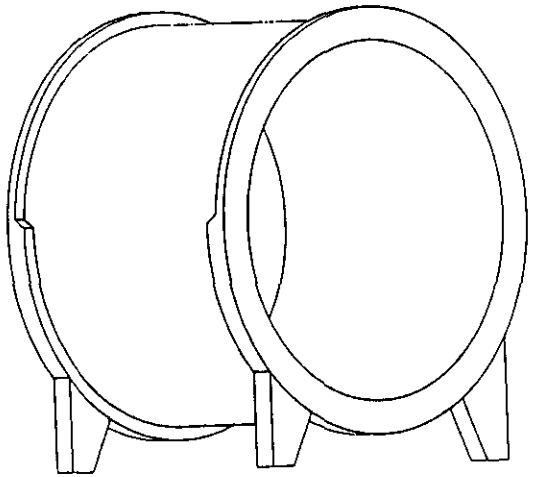

1500 Metric Tonnes

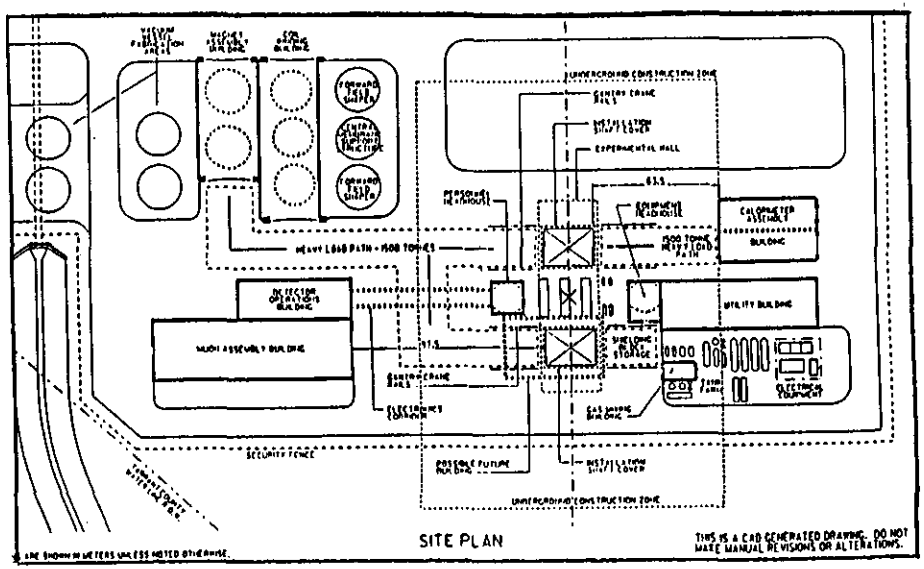

VG-GEM-92-010-16
6/20/92

(Wineman) Grav 67.5 deg from srvc
time = 0.10000E+02
fringes of eff. stress (v-m)
min= 1.704E+05 in element 189
max= 8.382E+06 in element 236
shell outer surface in global coordinates

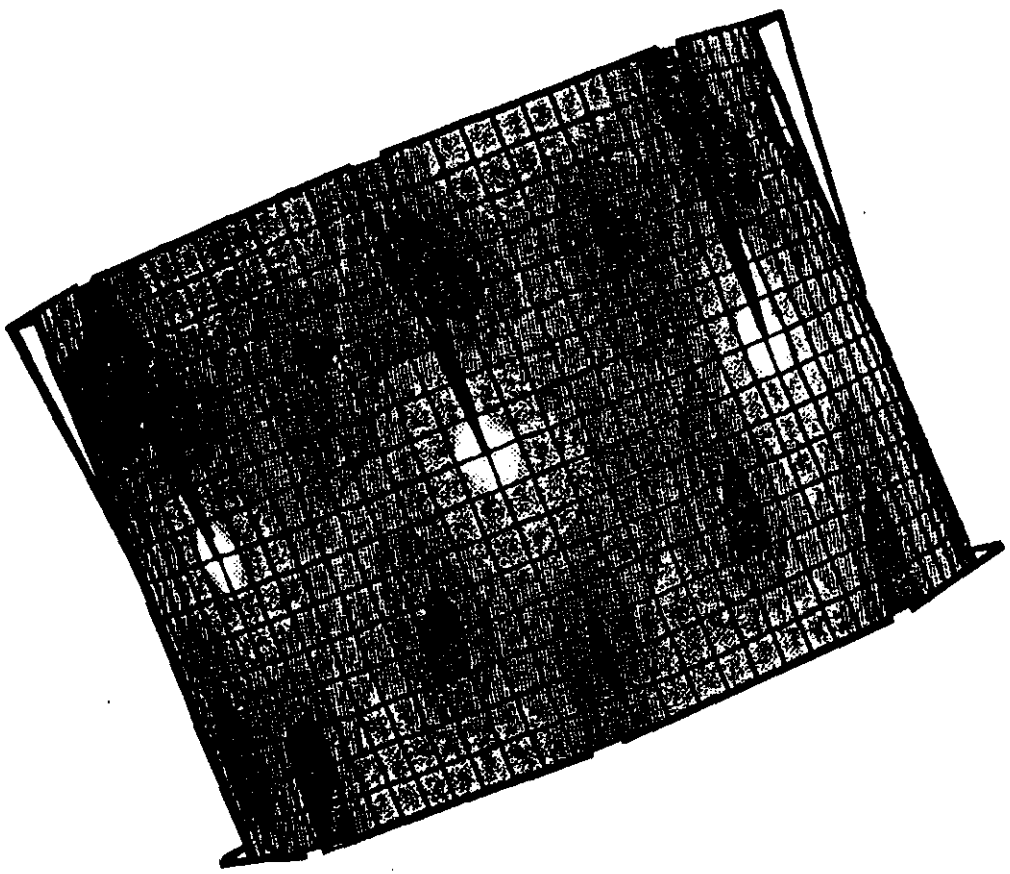

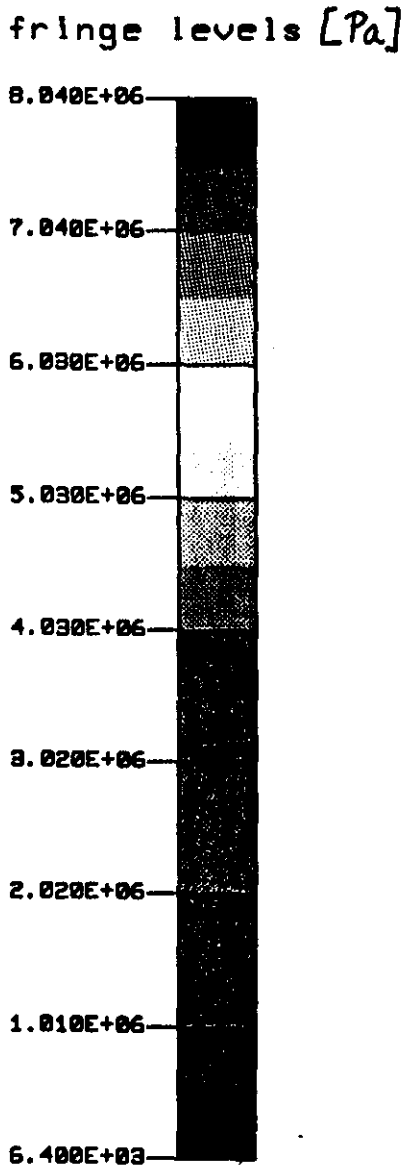

disp. scale factor = 0.100E+01 (default)

Advantages of this approach

- Vessel is fabricated and the coil is assembled in the preferred orientation
- The vacuum vessel is accepted prior to assembly
- LN shields are assembled in parallel with critical path
- LN shields can be cold-tested prior to coil assembly
- Use of existing structures reduces handling fixture cost
  - Vessel end flange
  - Axial and radial rods
- Coil is aligned in favorable orientation
- Leak detection is sequential and predictable
- Welding is minimized near the coil
- Clearances are adequate and visible

Main disadvantages*

- Many multi-ton, large volume high-lifts
- Uprighting the final ≈ 1500 T magnet assembly

* But these can be managed within the state of the art by qualified rigging specialists with carefully engineered lifts

Status of the Assembly Approach

- A workable baseline has been developed
- A leak-hunting plan is being developed
- The baseline assembly has been reviewed by industry

But other approaches are encouraged

Superconducting Sup er Collider

Cold Mass Design Update

Brad Smith

Massachusetts Institute of Technology
Plasma Fusion Center
18 August, 1992

GEM MAGNET - Field Design

- Force on moving charged particle
- Curvature - Sagitta
- Momentum Resolution $\frac{\Delta P}{P} = \frac{\Delta S}{S}$

Performance Requirement for P = 500 GeV/c

$\frac{\Delta Pt}{Pt}$ @ $\eta = 0$ (90°) 5%

$\frac{\Delta Pt}{Pt}$ @ $\eta = 2.5$ (9.4°) 10%

$Pt = |P| \sin\theta$

$\eta = -\ln \arctan\left(\frac{\theta}{2}\right)$

θ = angle from beamline

Figure of Merit BL^2/σ_{eff}

B - Magnet

L - muon chamber array
s ~ 1 mm

σ_{eff} - Muon chambers must measure track to ~50 microns

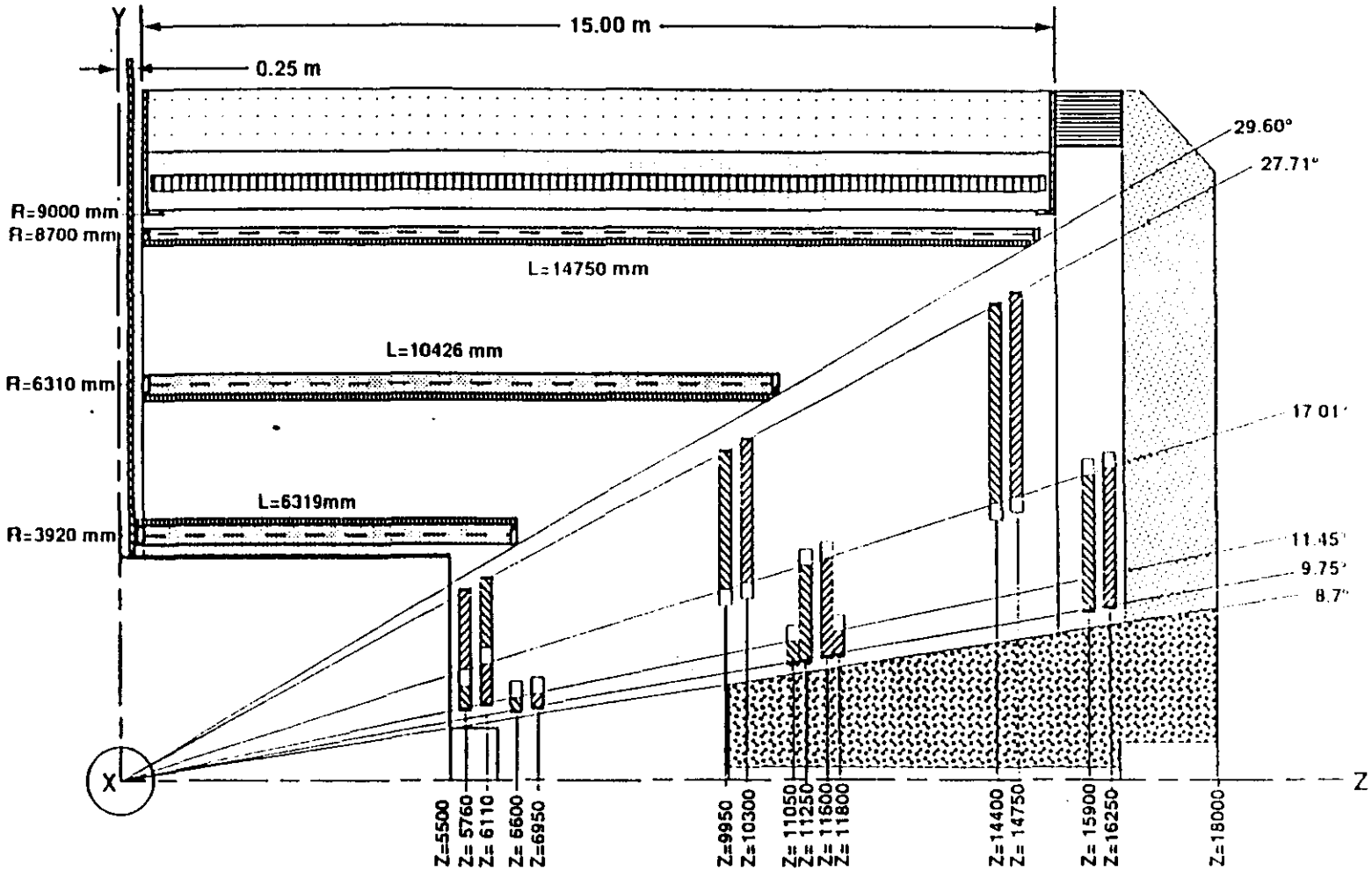

GEM MUON SYSTEM CHAMBER LAYOUT BASELINE

Fig. 3.2 a

Dresser Laboratory	
GEM Muon System Chamber Layout	
Drawn By: F. Nimblett	Rev (-)
Dwg. No: GMU0010	3/27/92
Approved by:	

GEM Baseline 1, March 25, 1992

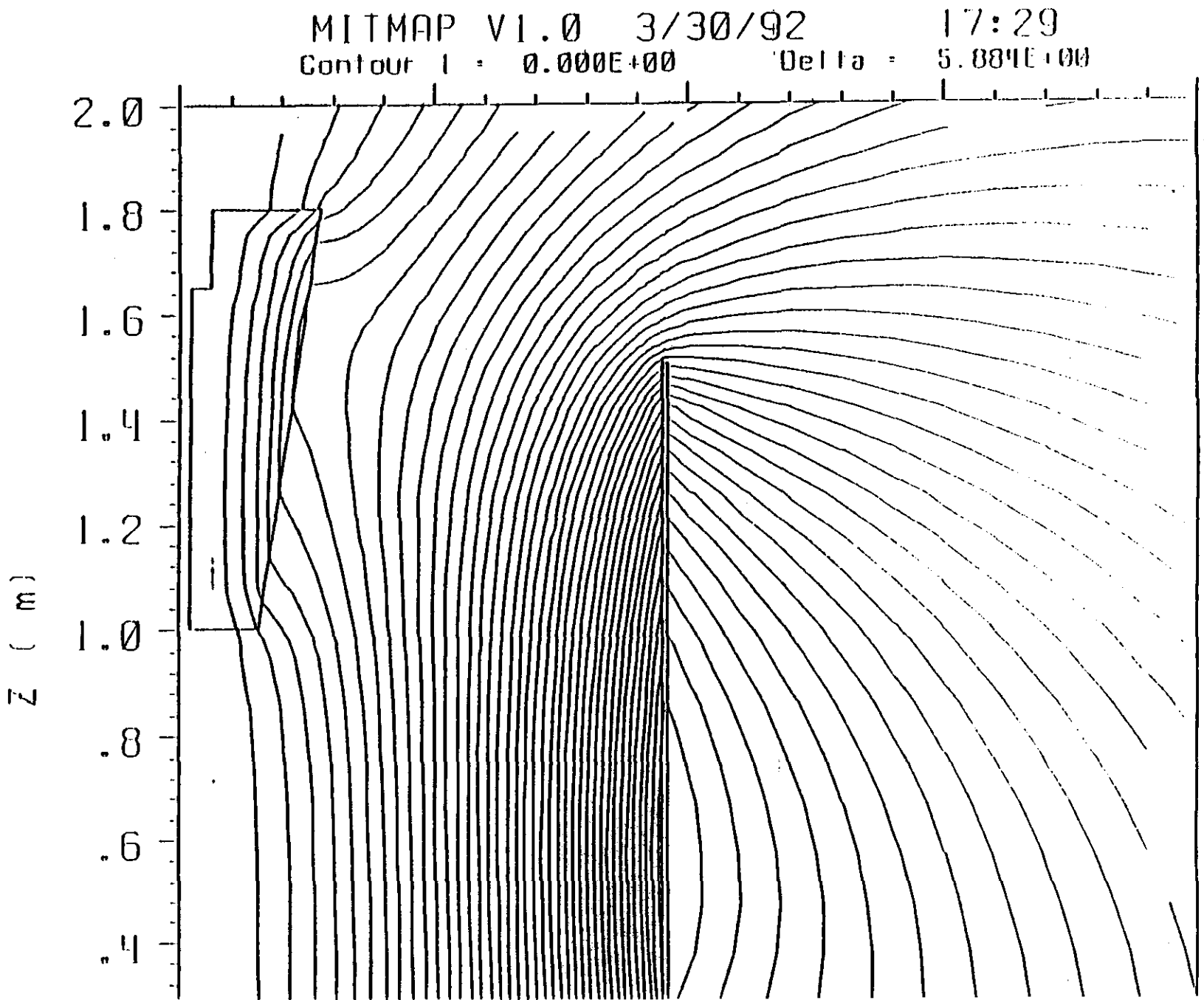

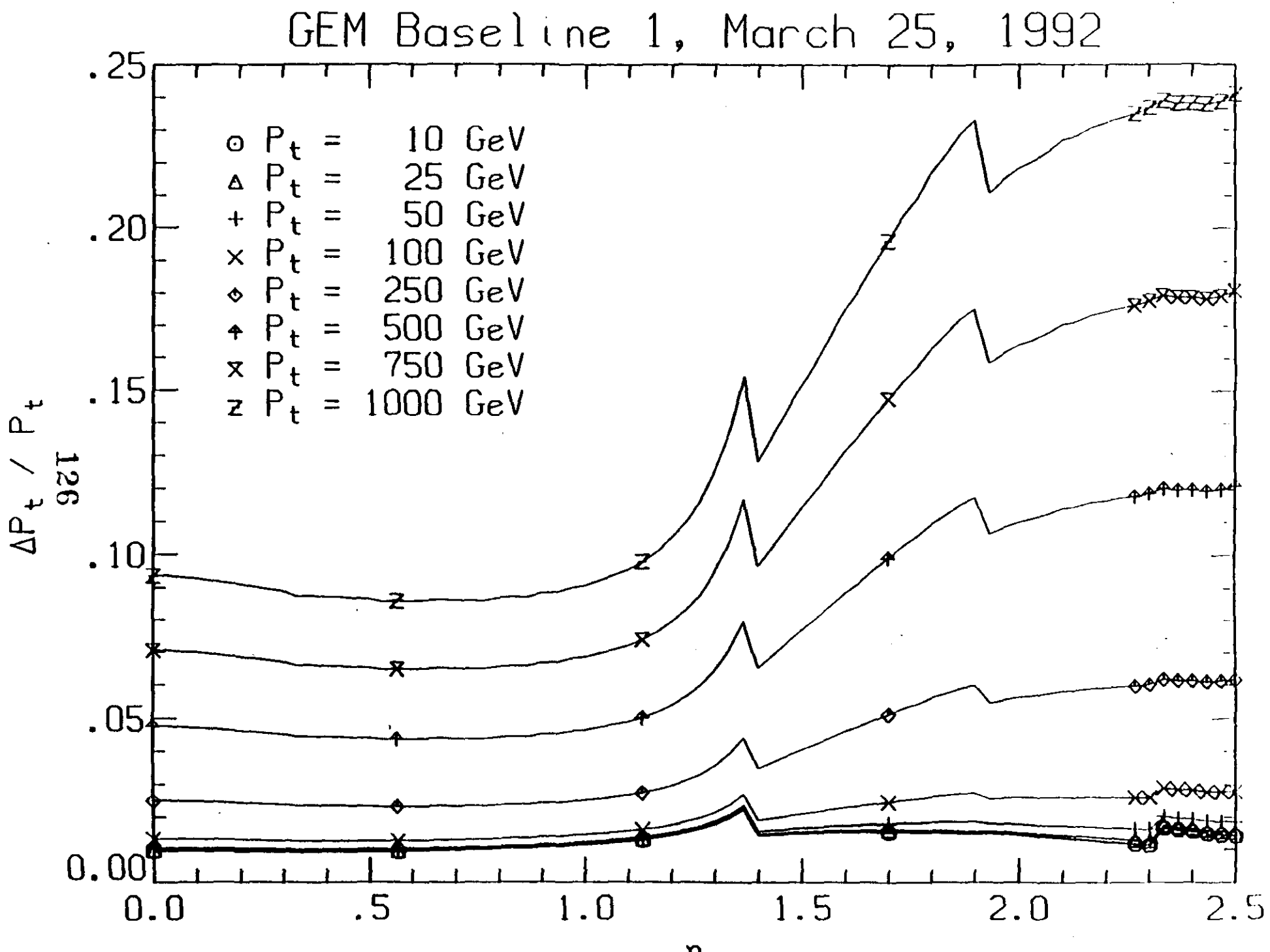
GEM Baseline 1, March 25, 1992
⊙ P_t = 10 GeV
△ P_t = 25 GeV
+ P_t = 50 GeV
× P_t = 100 GeV
◇ P_t = 250 GeV
↑ P_t = 500 GeV
⧖ P_t = 750 GeV
z P_t = 1000 GeV
$\Delta P_t / P_t$
.25
.20
.15
.10
.05
0.00
0.0
.5
1.0
1.5
2.0
2.5
η

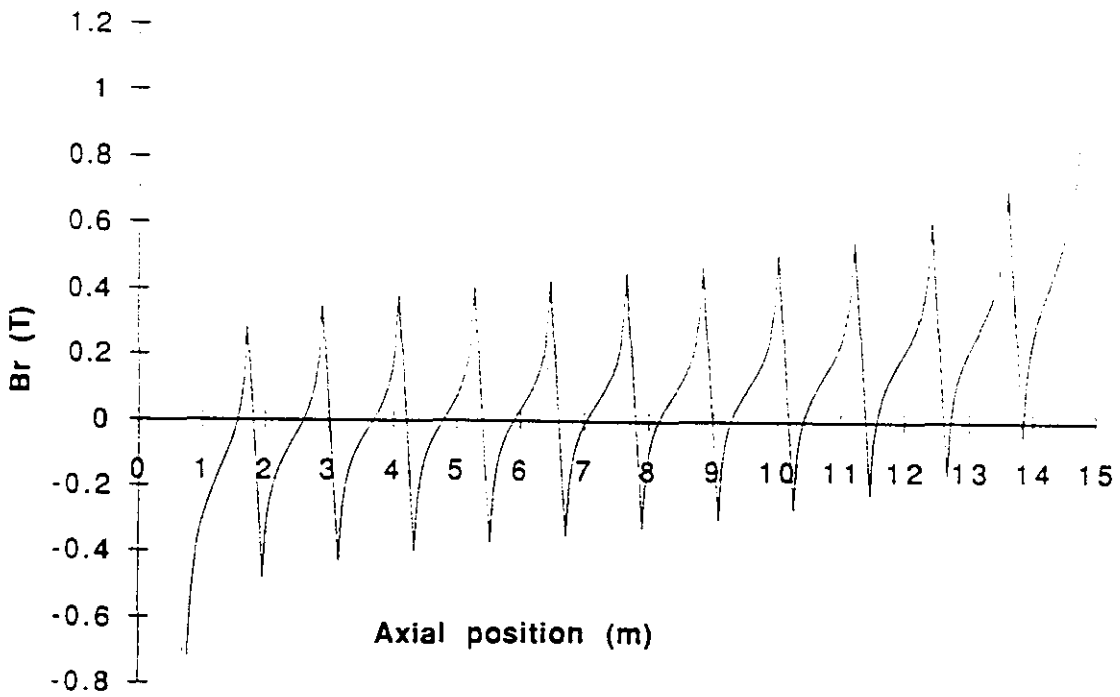

Figure 2.5.2-3 Radial Field Component at the Winding Due to Coil Alone

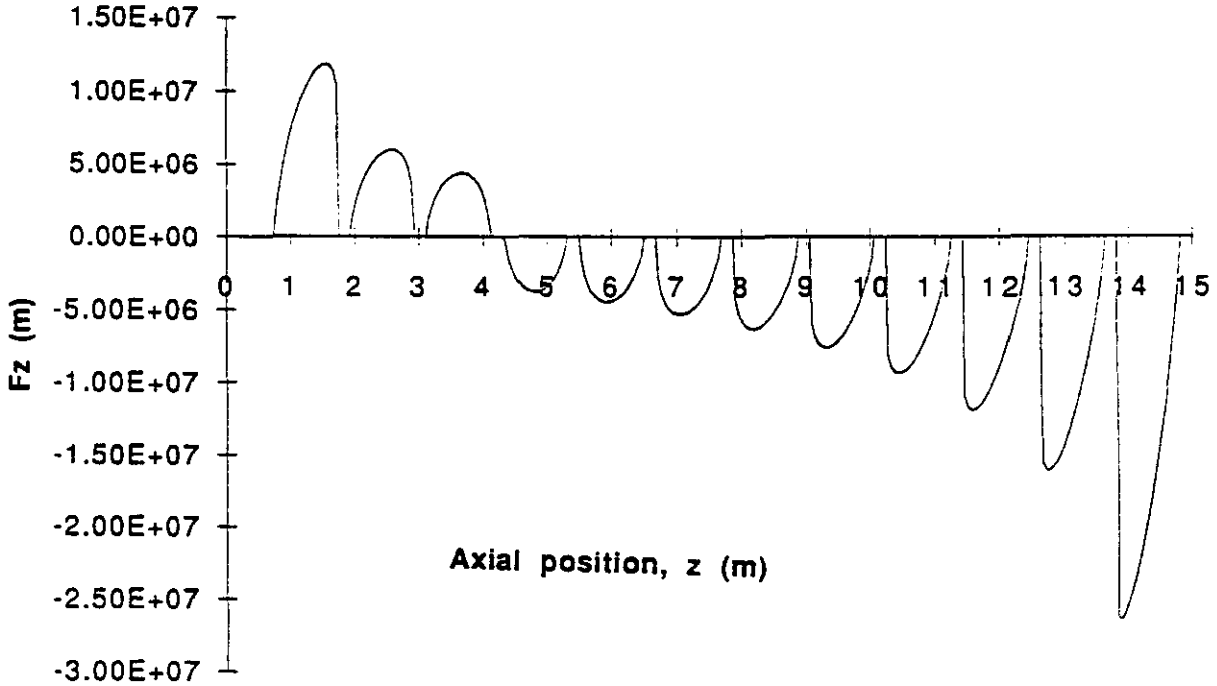

Figure 2.5.2-4 Cumulative Axial Force within Each Coil Module Due to Coil Alone (Assumes Infinitely Stiff Flange/Bobbin)

Cumulative Axial Load (+ =>Tension, - => Compression) on Winding with No Bobbin vs. Axial Position, z (No Pole)

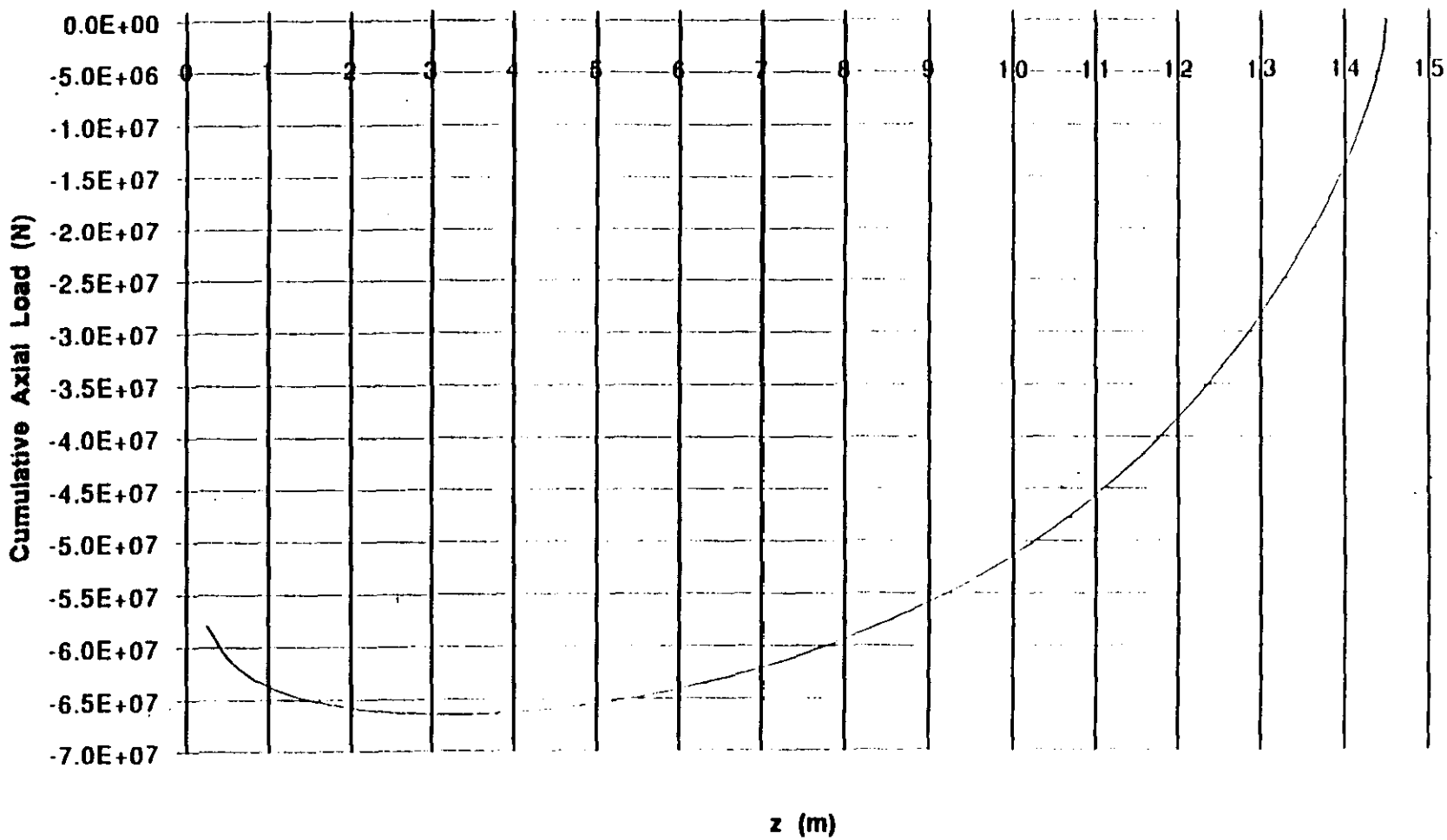

GEM DETECTOR ELEVATION

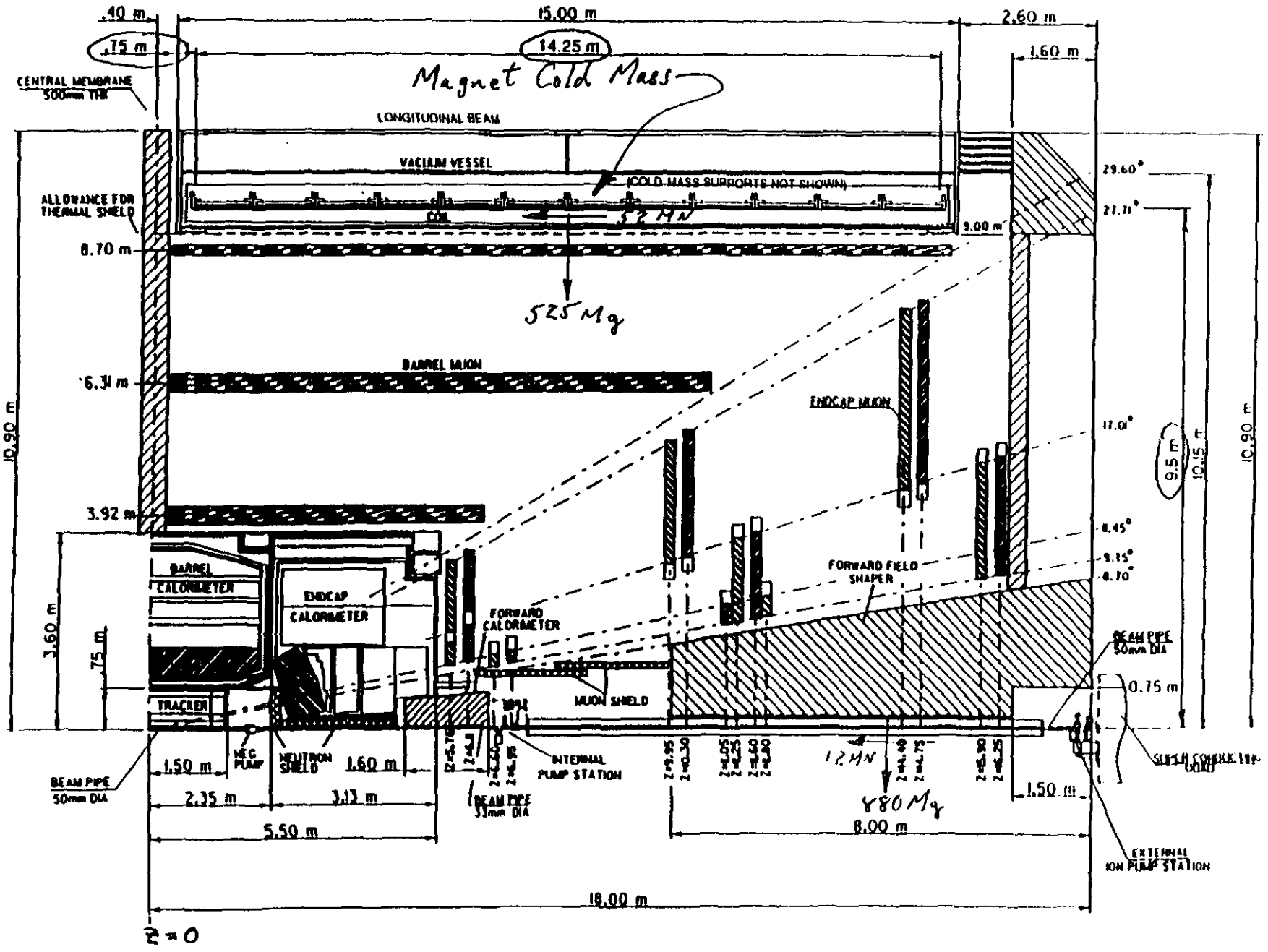

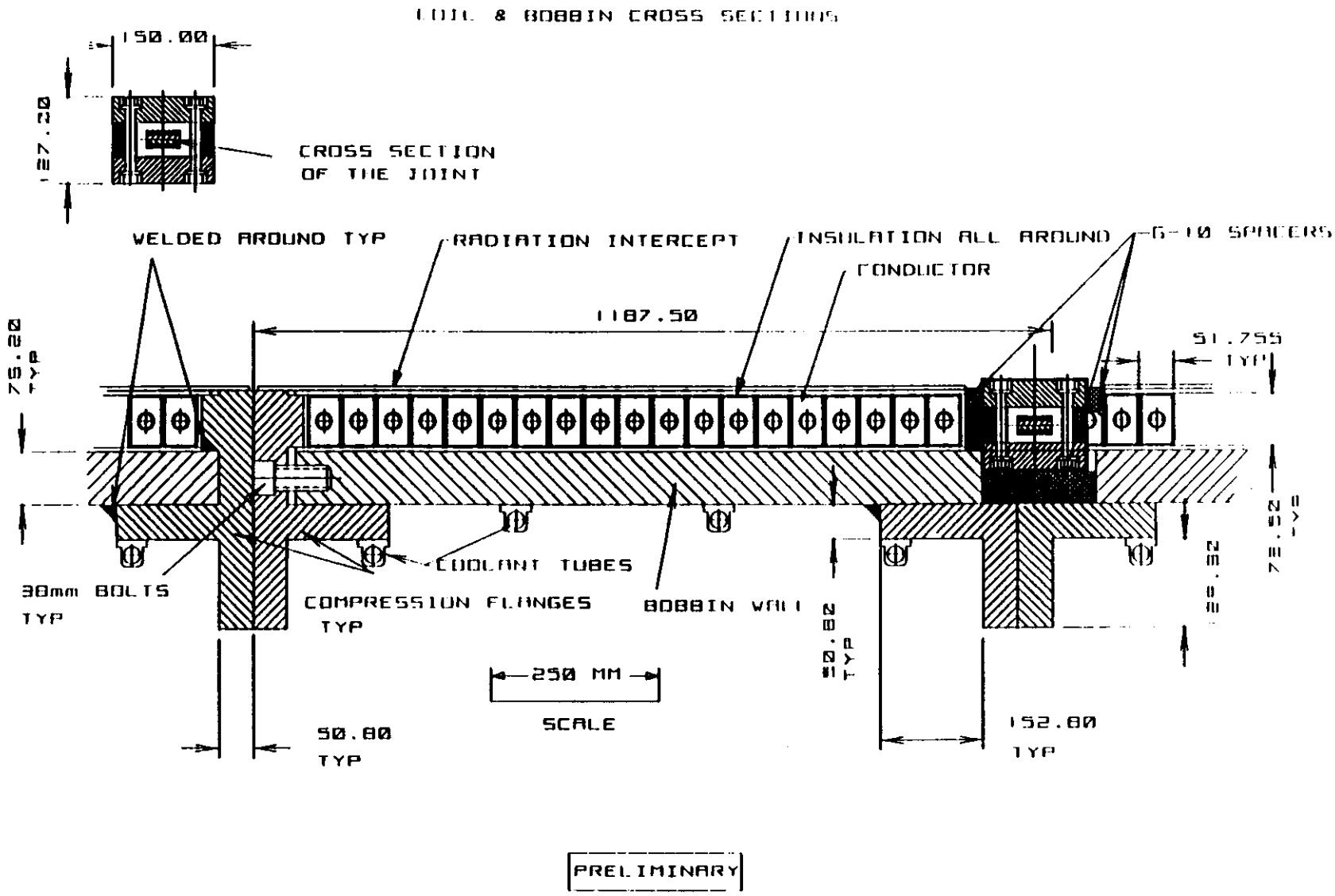
COIL & BOBBIN CROSS SECTIONS
150.00
127.20
CROSS SECTION
OF THE JOINT
WELDED AROUND TYP
RADIATION INTERCEPT
INSULATION ALL AROUND
G-10 SPACERS
CONDUCTOR
1187.50
51.755
TYP
75.20
TYP
COOLANT TUBES
30mm BOLTS
TYP
COMPRESSION FLANGES
TYP
BOBBIN WALL
250 MM
SCALE
50.80
TYP
152.80
TYP
PRELIMINARY

CONDUCTOR REQUIREMENTS

Central Field (T)	0.8
Nominal Field at Winding (T)	1.1
Peak Field at Winding (T)	1.6
Operating Temperature (K)	4.5
Operating Current (kA)	50
Maximum Hotspot Temp. (K)	100
Maximum Dump Voltage (V)	1000
Number Charge/Discharge Cycles	200
Charging Time (Hr)	8
Number Thermal Cycles RT/4.5 K	100

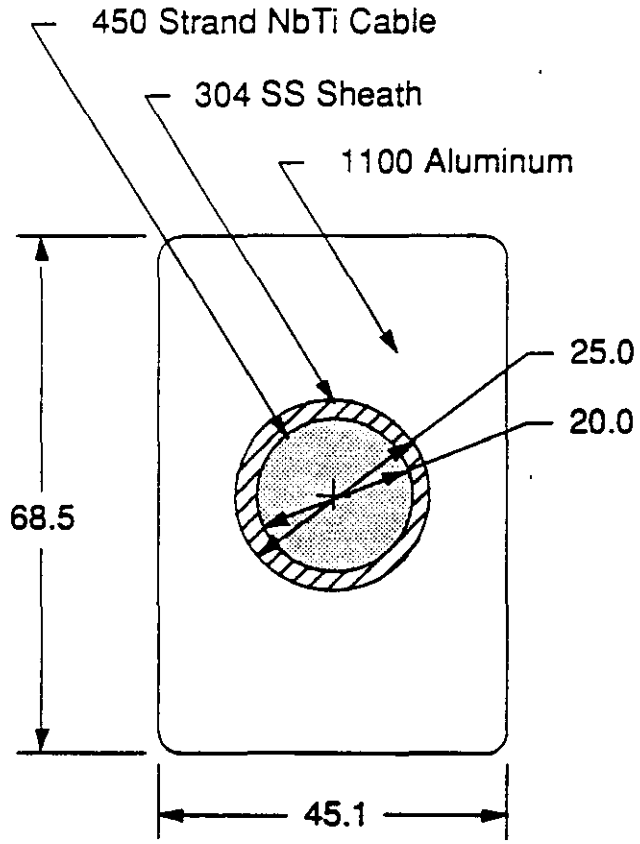

GEM Magnet Conductor

Sheath Material	Aluminum Alloy 1100
RRR	14
Hole Diameter (mm)	25.0
Width (mm)	45.1
Height (mm)	68.5
Corner Radii (mm)	3.0
Conduit Material	Type 304 SS
Outer Diameter (mm)	25.0
Inner Diameter (mm)	20.0
Cable	
Cable Pattern	3x5x5x6
Strand Diamter (mm)	0.73
Cu:Non-Cu	3
Number of Strands	450
Operating Current (A)	50,000

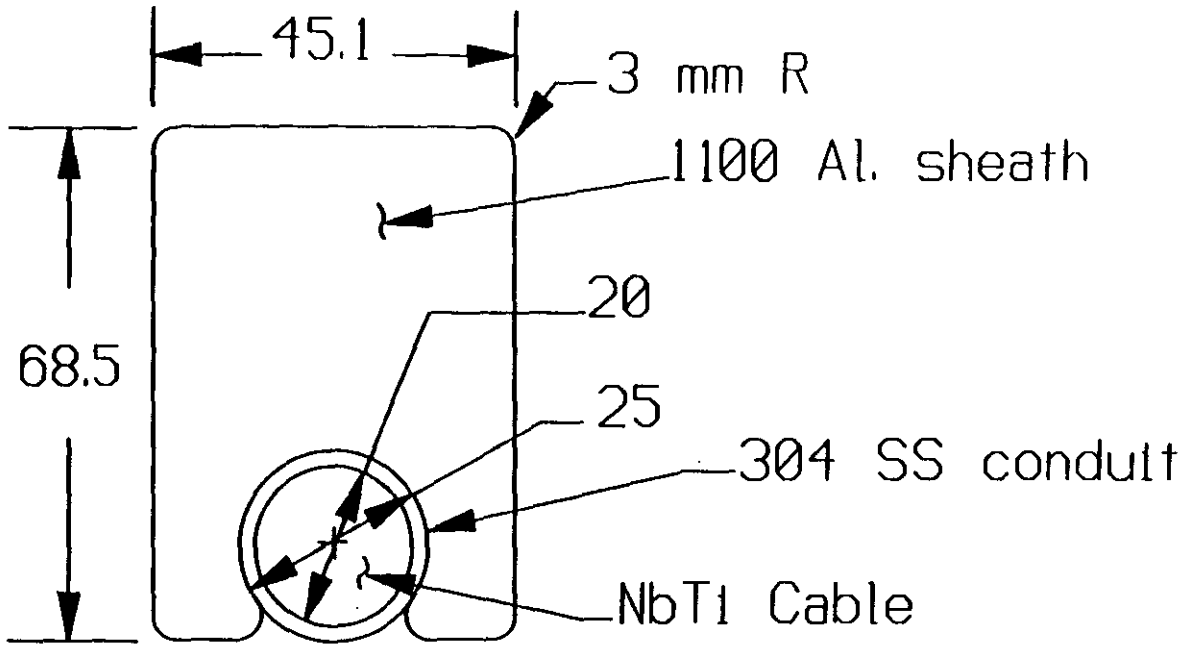

G.E.M Magnet Conductor (option 1)

(dimensions in mm)

CICC PERFORMANCE

- DC OPERATION

B_o = 0.8 T
B_{max} = 1.6 T
T_{in} = 4.5 K
P_{in} = 3.5 atm
Mass flow rate = 0 g/s
I_{op} = 50,200 A
I_c = 197,000 A
I/I_c = 0.25

- STABILITY

B = 1.6 T
T_c = 8.70 K
T_{cs} = 7.63 K
T_b = 4.5 K
ΔT = 3.13 K
H_{tc} = 800-1000 $W/(m^2\text{-}K)$
Transient Heat Transfer Coefficient
I_{tr} = 51.5-57.3 kA Transition Current for Stability

Energy Margin
External disturbance > 315 J/m (1670 mJ/cm^3)
Internal disturbance > 250 J/m (1330 mJ/cm^3)

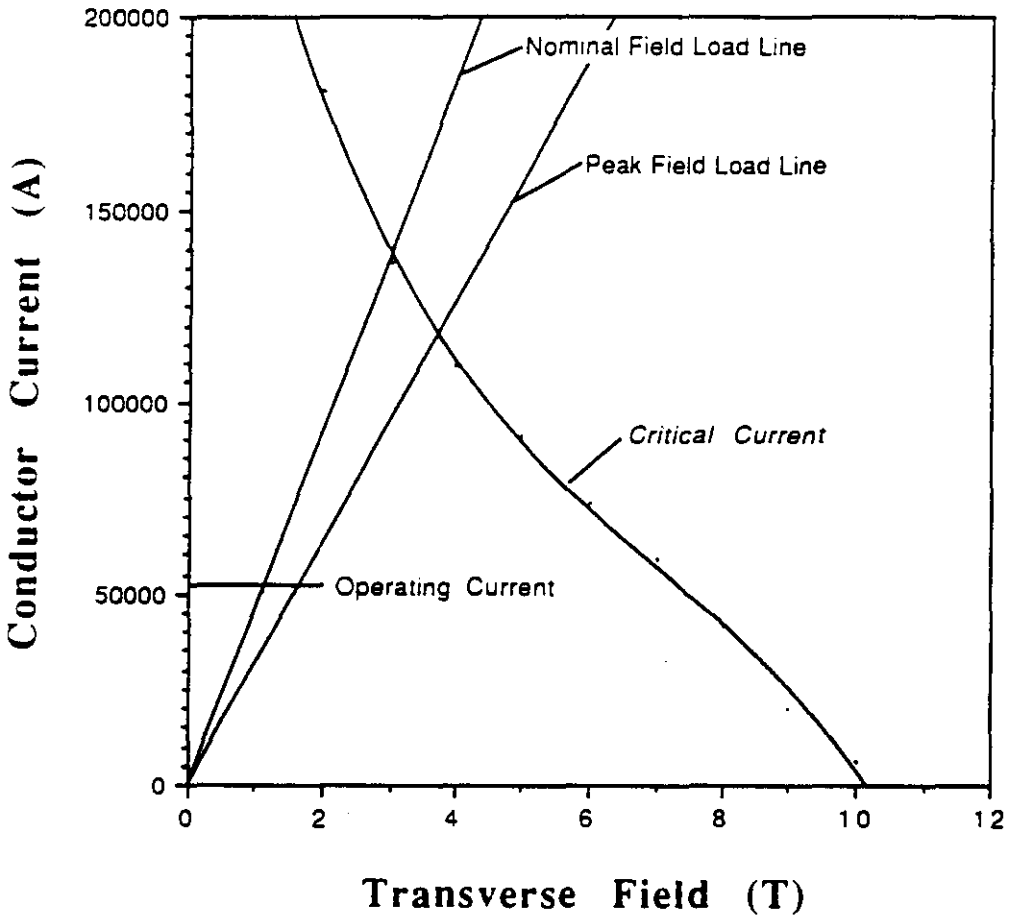

Fig. 2.5.4-2 Conductor critical current versus magnetic field and operating point.

- <u>QUENCH</u>

E= 2.5 GJ
V_{dump} = 1.0 kV

τ_{delay} = 1.0 s

τ_{dump} = 99.6 s

HOTSPOT Calculation
Tmax = 96 K
Pmax = 445 atm (6700 psi)

1D Quench Code Calculation
(SARUMAN/EC-NET Team/L. Bottura)

Tmax = 100 K
Pmax = 340 atm (5000 psi)

❑ Both calculations assume current transfer to the aluminum sheath, and they include the heat capacity of helium, cable, conduit and sheath.

❑ Both calculations are conservative in that they do not account for current and energy transfer to the bobbin and the bobbin heat capacity.

Figure 2.5.6.2-1

GEM DETECTOR MAGNET CONDUCTOR

ELASTIC-PLASTIC STRESS ANALYSIS

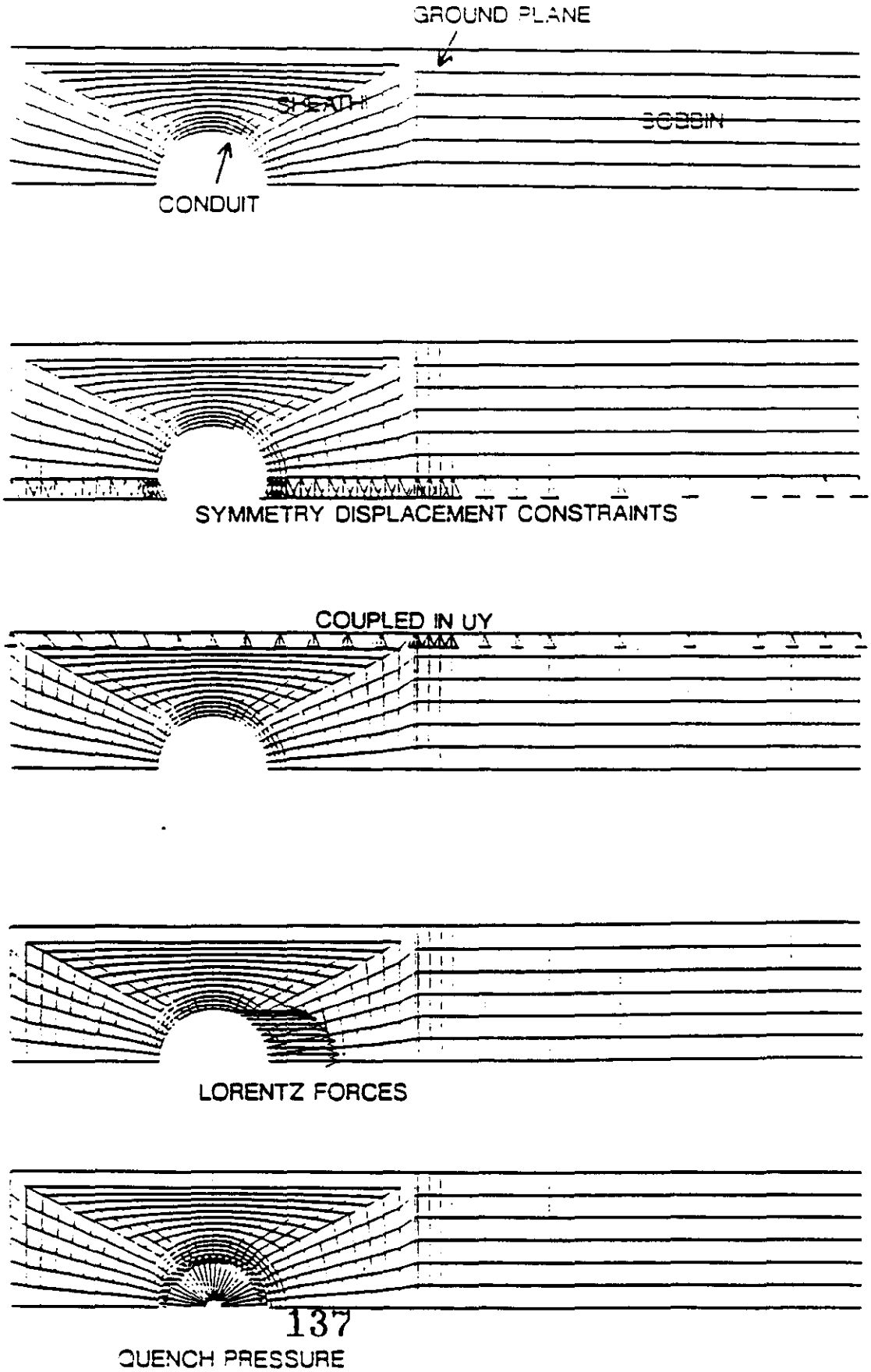

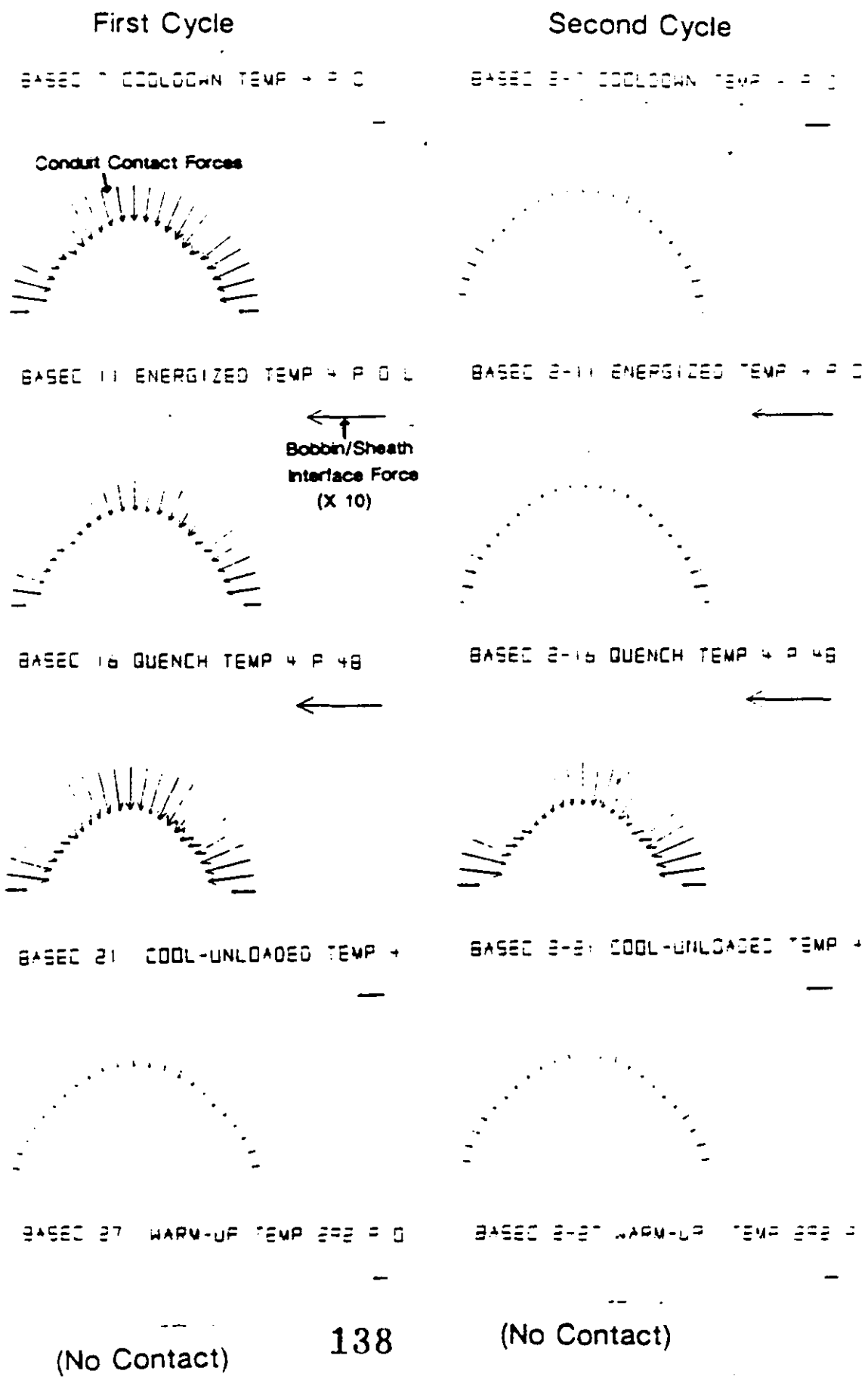
First Cycle
Second Cycle
Conduit Contact Forces
Bobbin/Sheath
Interface Force
(X 10)
(No Contact)
(No Contact)

FINAL STAGE CABLING PROCESS FOR GEM CABLE

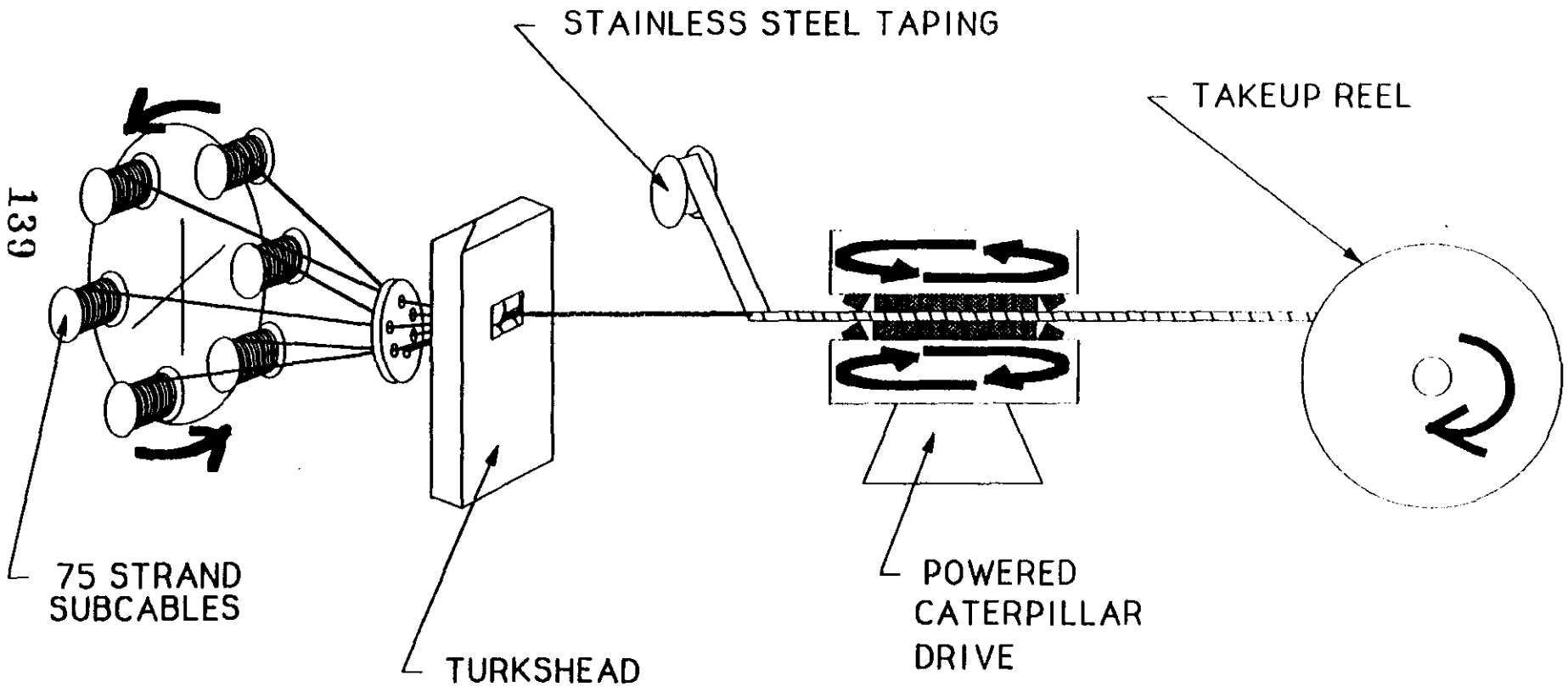

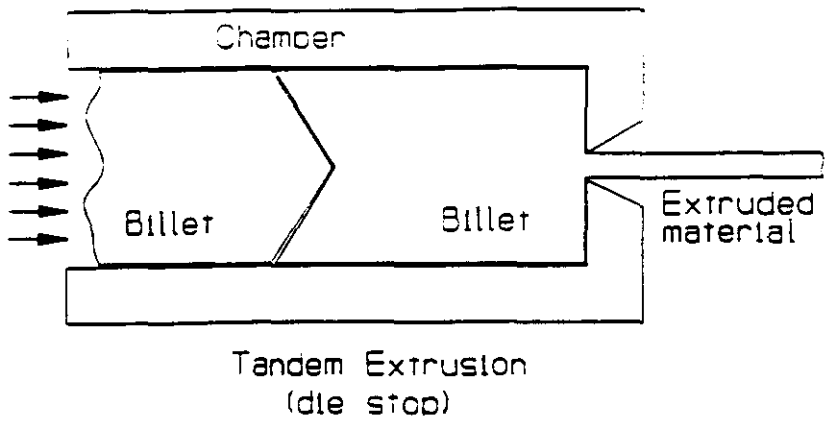

(a)

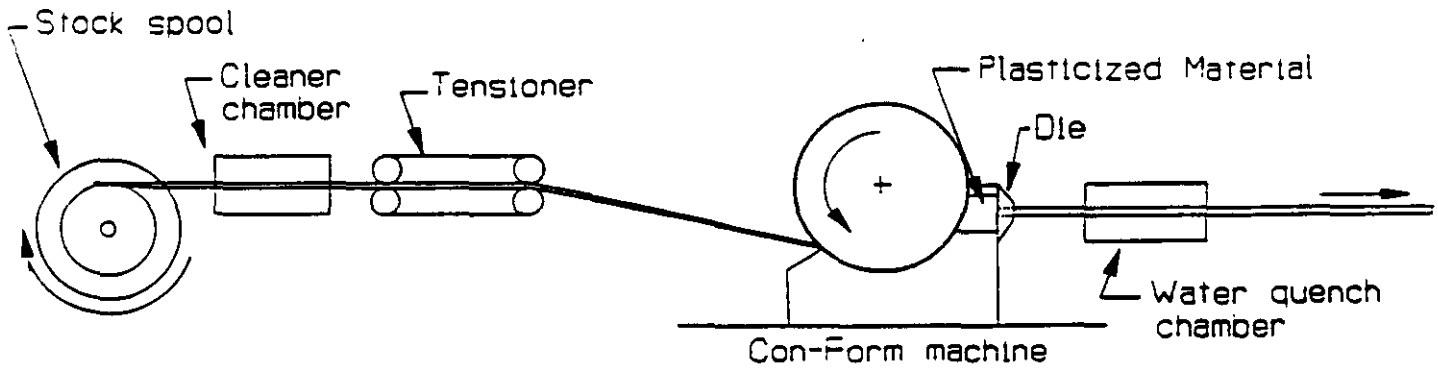

(b)

Figure 2.5.4-4 Aluminum sheath manufacturing options; **a)** tandem extrusion method, **b)** conform extrusion method.

HIGH PRESSURE Le He OUTLET
ASSEMBLY GUIDE

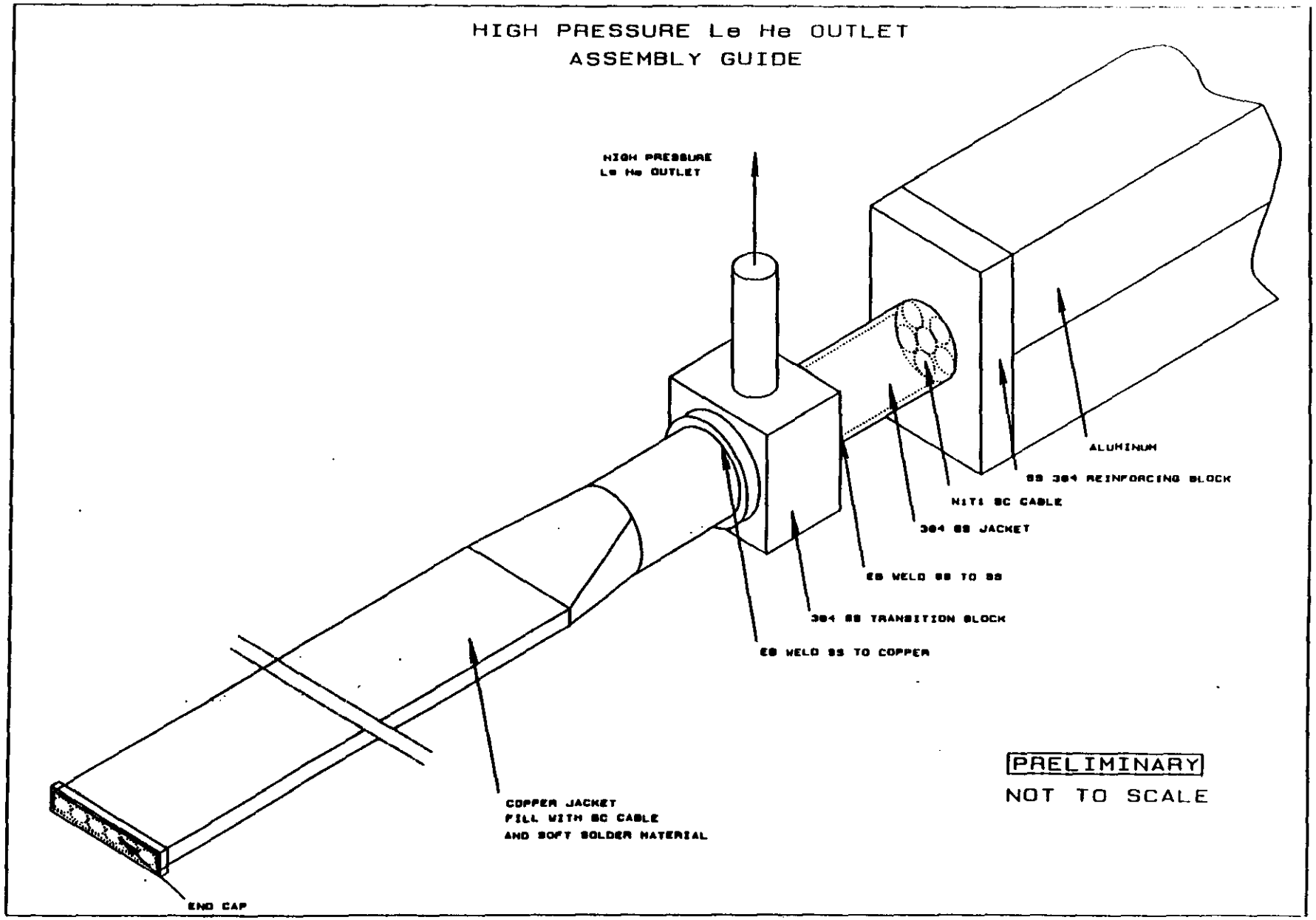

PRELIMINARY
NOT TO SCALE

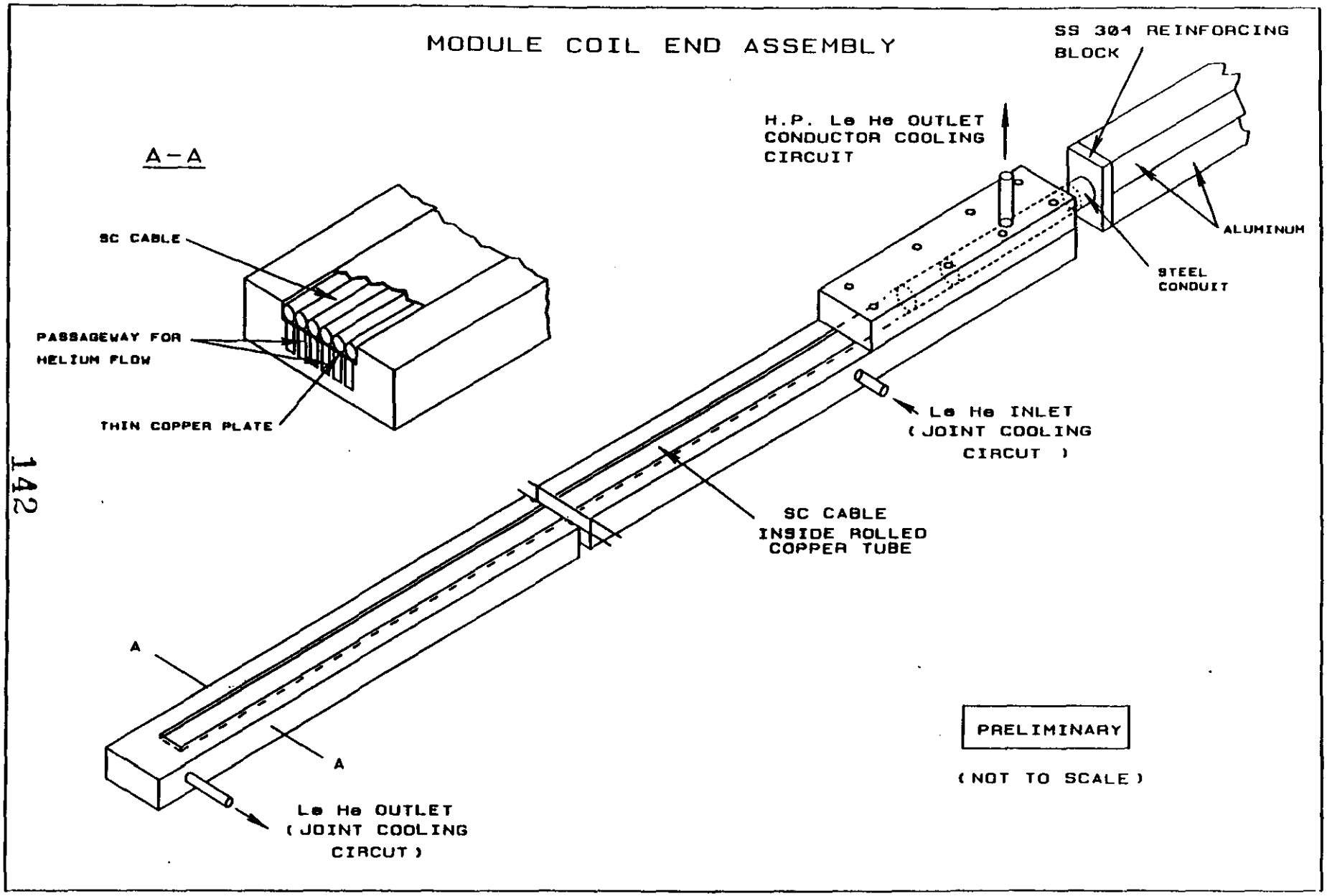
MODULE COIL END ASSEMBLY
A-A
SC CABLE
PASSAGEWAY FOR HELIUM FLOW
THIN COPPER PLATE
SS 304 REINFORCING BLOCK
H.P. Le He OUTLET CONDUCTOR COOLING CIRCUIT
ALUMINUM
STEEL CONDUIT
Le He INLET (JOINT COOLING CIRCUT)
SC CABLE INSIDE ROLLED COPPER TUBE
A
A
Le He OUTLET (JOINT COOLING CIRCUT)
PRELIMINARY
(NOT TO SCALE)

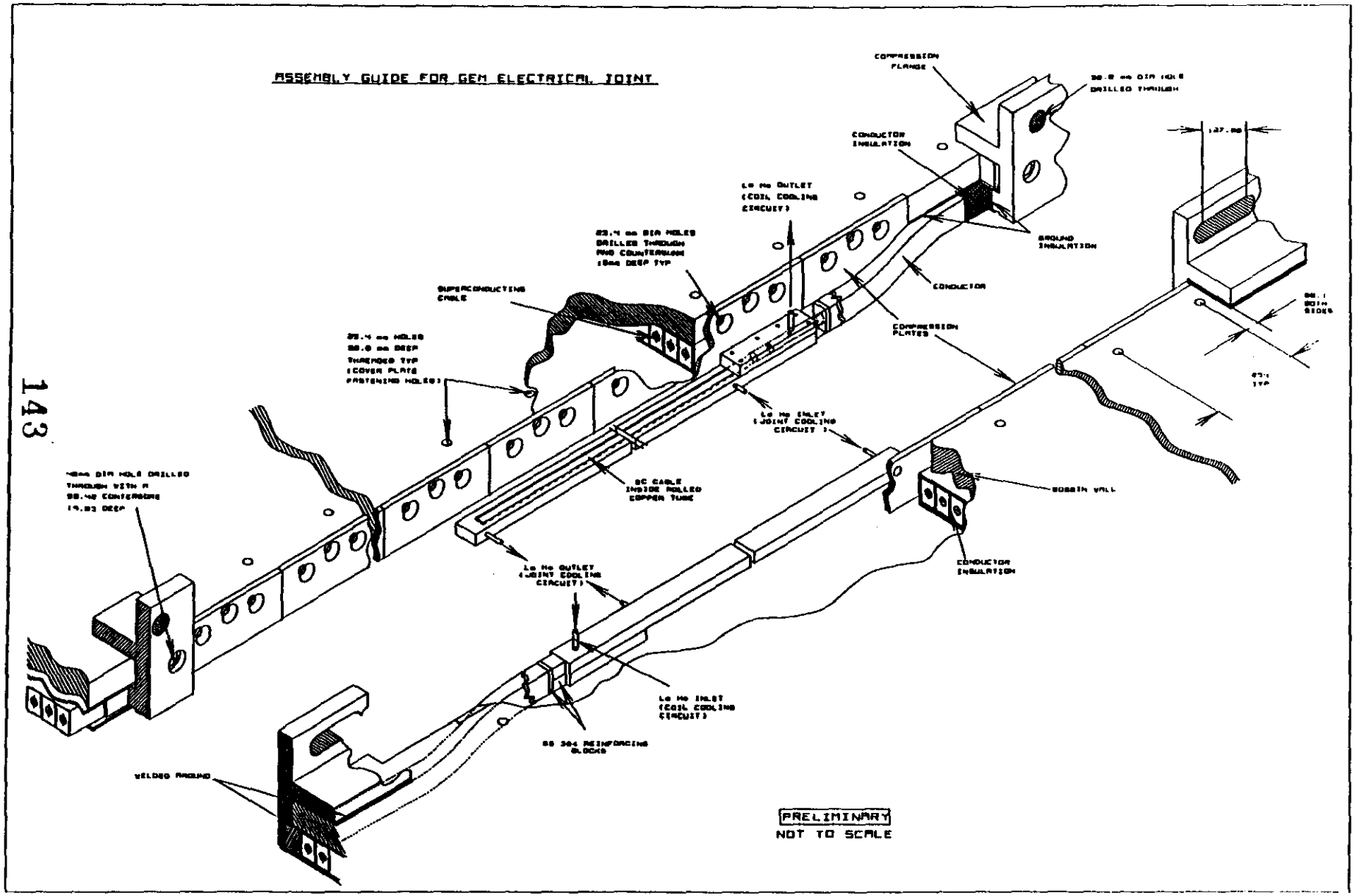

Figure 2.5.3-4 Joint Isometric

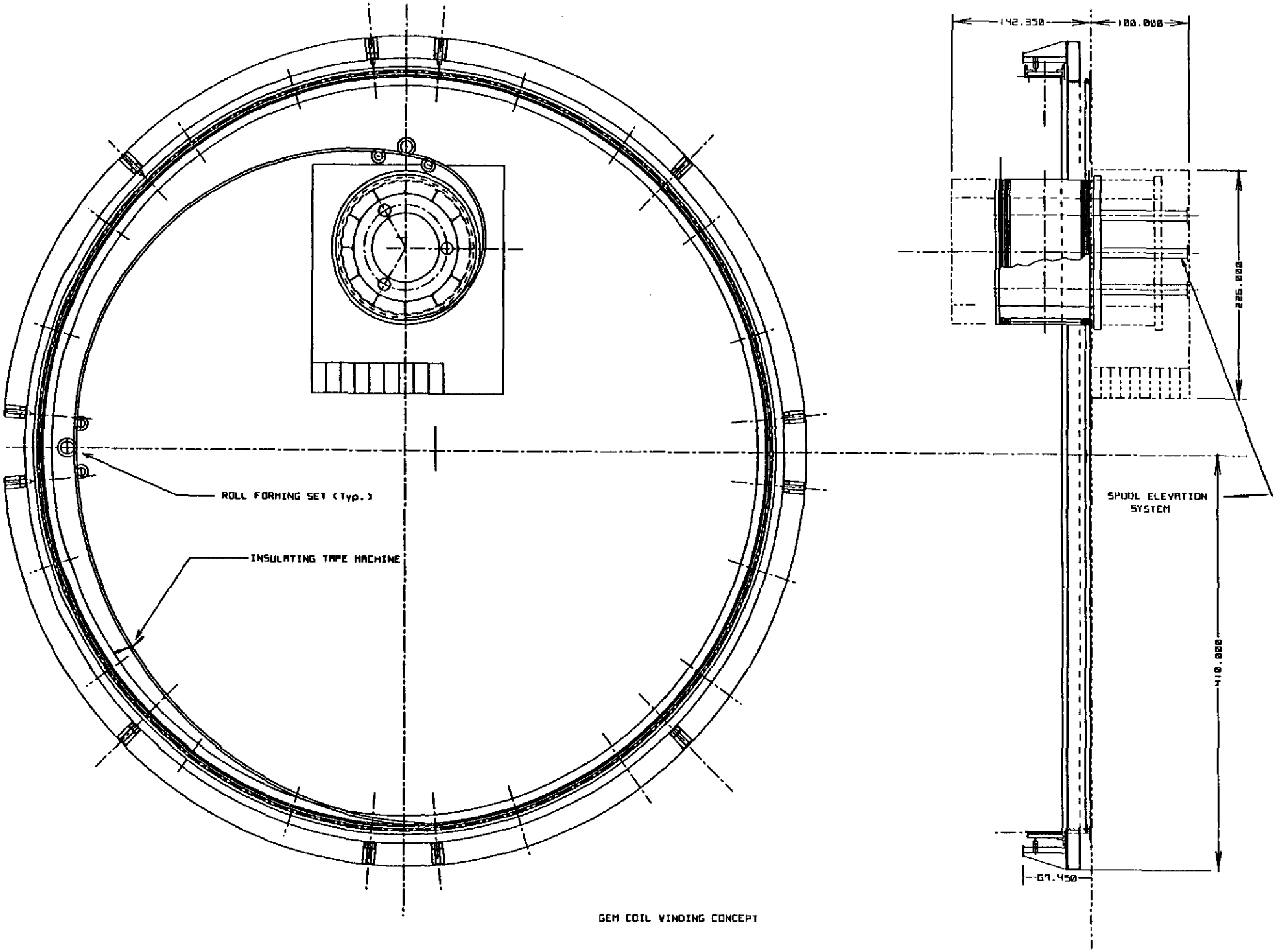

GEM COIL WINDING CONCEPT

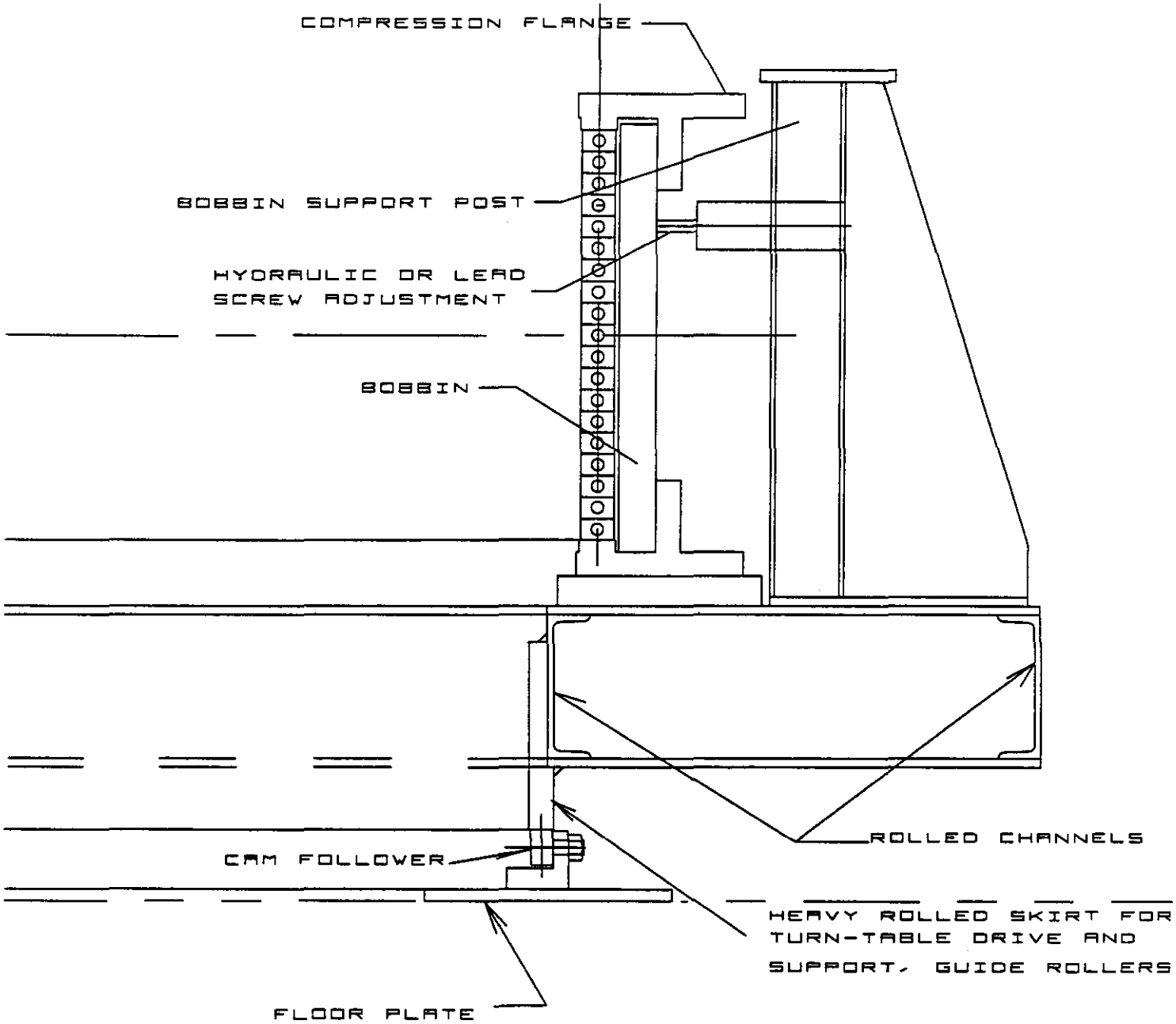

DETAIL OF WINDING CONCEPT

Superconducting Super Collider

Fabrication Plan Outline

Robert Johnson

JBc Associates
18 August, 1992

Purpose for Development of Plans & Procedures for Fabrication,Assembly, Installation, and Test

- Consistency in proposals because proposers conceptual plan based on SSC outline
- Simplify proposal evaluation through common set of technical responses.
- Provide a benchmark plan for use in evaluation
- Ensure that design can be fabricated, assembled, installed, and tested.
- Ensure SSC is knowledgeable about facilities, rigging and logistics requirements, and associated interfaces.

RAJ 6/29/92

Scope of Fabrication, Assembly, & Installation Plan

- Plan shall include:
  - Approach
  - Process or procedure
  - Flow charts
  - Schedule
  - Special tooling/test equipment
  - Facilities laydown space
  - Rigging & handling
  - Fixtures & equipment
  - Diagnostics
  - Magnet measurements
  - Survey & alignment

RAJ 6/29/92

Assumptions

- Conductor with joints furnished by SSC in full segment lengths, contractor to participate in full acceptance tests prior to winding
- Winding & assembly facilities provided as shown in SSCL drawings.
- Cryogenic, power, and instrumentation interfaces shall be at warm side of vacuum vessel.
- Forward field shaper and central membrane provided, but shall be assembled, installed, mounted, and aligned by magnet contractor.
- All tooling, fixtures, mobile handling & rigging equipment to be magnet contractor provided.
- Diagnostics magnetic measuring probes to be contractor furnished
- Survey & alignment to be done by contractor

Emphasis on Process/Procedures

- Conductor acceptance & test
- Coil winding & inprocess testing & QA
- Coil assembly
- Vacuum vessel field fabrication & assembly
- Assembly & insertion of coil subassembly into vacuum vessel
- Azimuthal tensioning of coil support struts
- Completion & rotation of half solenoid assembly
- Installation of half solenoid assembly
- Connection of half solenoid assembly to cryogenics, power, and control & diagnostics interfaces
- Installation of central membrane
- Joining two half solenoid assemblies
- Turn-on & test of magnet using contractor installed diagnostics
- Installation of forward field shapers
- Magnetic field mapping, survey, & alignment

RAJ 6/29/92

Superconducting Super Collider

Business/Procurement Status Update

Richard Fischer
Manager, GEM Project Planning and Control

Bill Davis
Subcontract Administrator

SSC Laboratory
18 August, 1992

Initial
GEM Magnet Acquisition Schedule

Industrial Technology Meeting & Start Acquisition Plan Document	1 April 1992
Start RFP (Including SOW & Data Requirements)	8 April 1992
Submit Acquisition Plan for DOE Approval	15 April 1992
RFP Review by Contract Review Board (CRB)	Early June 1992
Release Draft RFP for Industry Comments	Late June 1992
Program Advisory Committee (PAC) Review	Early July 1992
Industrial Technology Meeting (Optional)	Mid July 1992
Receive Comments on Draft RFP	Mid July 1992
Submit RFP for DOE Approval	Early August 1992
Release RFP to Offerors	Late August 1992
GEM Magnet Proposals due to SSCL	September 1992
Proposal Evaluation, Fact Find & Negotiation Complete	November 1992
Submit Subcontract Package to DOE for Approval	December 1992
GEM Magnet Subcontract Award	January 1993
*Revised Subcontract Award Date	February 1993

GEM Project Department

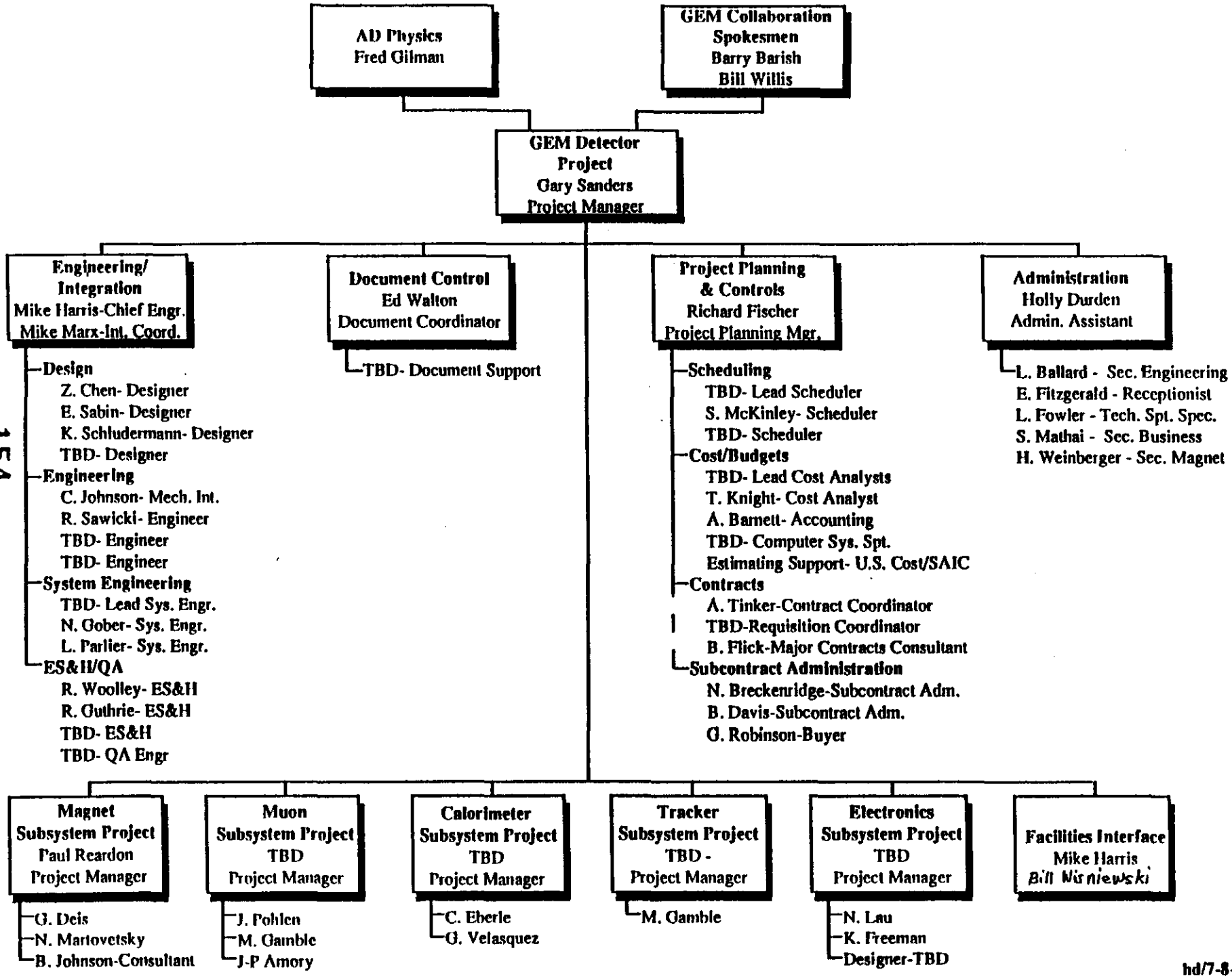

hd/7-8-92

Industrial Comments of Programmatic Issues

- What is in and what is out and who is responsible?

IN	OUT
• Design and fabrication of Coil Assemblies, Vaccum System, and Control System • Installation of all Magnet systems including GFE	• Design and fabrication of Forward Field Shaper and Central Detector Support • Design and fabrication of Cryogenics • Design and fabrication of the Power Supply and Protection System

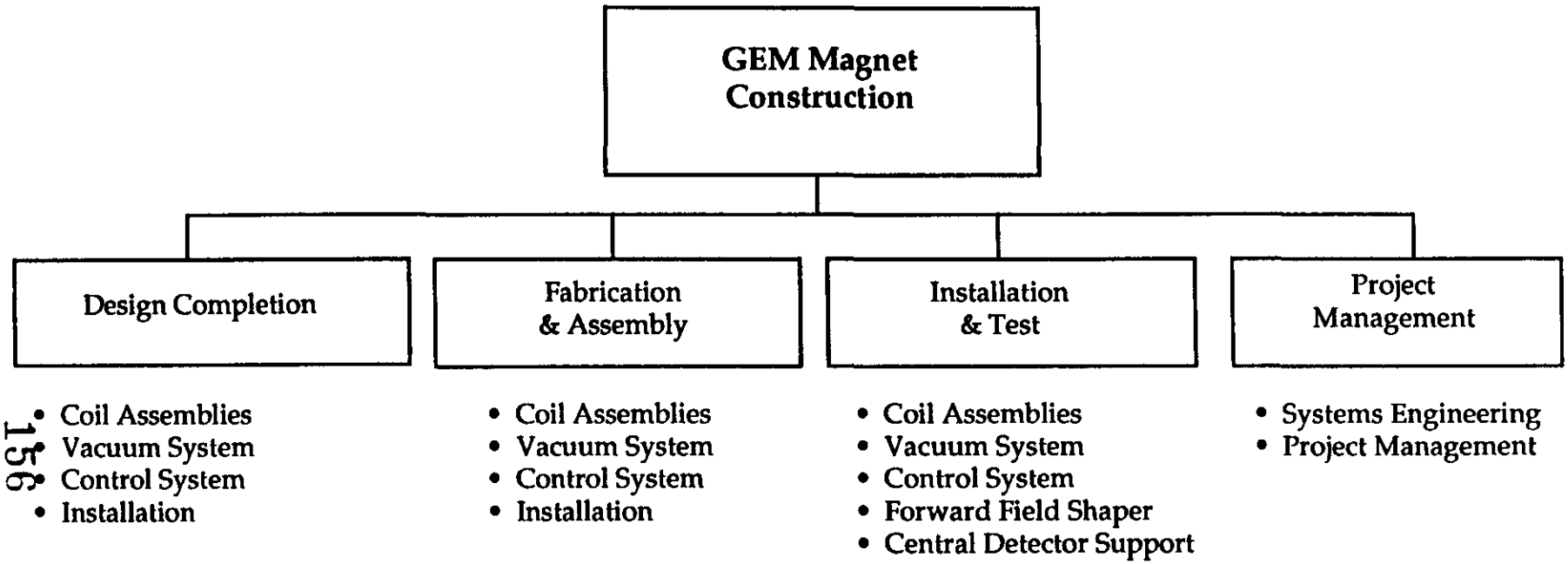
GEM Magnet Construction
Design Completion
Fabrication & Assembly
Installation & Test
Project Management
• Coil Assemblies
• Vacuum System
• Control System
• Installation
• Coil Assemblies
• Vacuum System
• Control System
• Installation
• Coil Assemblies
• Vacuum System
• Control System
• Forward Field Shaper
• Central Detector Support
• Systems Engineering
• Project Management