GEM TN-92-140

Responses to Questions Regarding Engineering Issues of the GEM Noble Liquid Calorimeter Options

T. Adams, K. Barnstable, J. Brogan, J. Coulon, B. Easom, H. Gordon*,
M. Lajczok, L. Mason, G. Velasques, W. Vinnedge
Martin Marietta Astronautics Group
*Brookhaven National Laboratory

September 11, 1992

Abstract:

Describes the present baseline parameters for the liquid argon calorimeter system. We are also investigating the use of krypton as the sampling medium to improve the resolution further. For the same density, one will be able to increase the sampling ratio by reducing the plate thickness and increasing both the density and volume of the sensitive material. Krypton option parameters are provided in the attached figures.

GEM TN-92-140

Responses to Questions Regarding Engineering Issues of the GEM Noble Liquid Calorimetry Options

Prepared by:

T. Adams, K. Barnstable, J. Brogan, J. Coulon, B. Easom,
H. Gordon (BNL), M. Lajczok, L. Mason, G. Velasquez, W. Vinnedge,

11 September, 1992

SCIENCE SYSTEMS
MARTIN MARIETTA ASTRONAUTICS GROUP
DENVER, CO.

MARTIN MARIETTA

Table of Contents

	Page No.
Overview	**1 - 9**
Question 1 - Liquid Krypton EM Calorimeter Support	**10 - 46**
Barrel EM Calorimeter Module Structure Effects of Axial and Radial Thermal Coefficients of Expansion	
Question 2 - Integrated Liquid Argon Calorimeter Diameter	**47 - 71**
Tolerance Stack-up for Fabrication and Assembly Barrel Feedthroughs and Their Interface with the Muon System Affect of Absorber Material on Absorption Length	
Question 3 - Integrated Liquid Argon Calorimeter Support	**72 - 81**
Design, Analysis, and Configuration of Barrel Calorimeter Supports	
Question 4 - Integrated Liquid Argon Calorimeter Fabrication	**82**
Discussion of On and Offsite Fabrication and Assembly Costs	
Question 5 - Integrated Liquid Argon Calorimeter Fabrication	**83 - 92**
Cable Routing for EM Barrel Feedthroughs Test and Installation Sequence for Barrel EM Isolation of Cables During Welding Operations	
Question 6 - Integrated Liquid Argon Installation / Testing	**93**
Discussion of Testing Above Ground and in Experimental Hall	
Question 7 - Calorimeter Cost and Schedules	**94 - 118**
Integrated Liquid Argon Calorimeter and EM only Cost Comparisons	
Question 8 - Integrated Calorimeter Assembly Fixturing	**119 - 147**
Sketches of Fabrication, Assembly, and Installation Fixtures	

OVERVIEW

This section describes the present baseline parameters that govern the engineering for the liquid argon calorimeter system. We are also investigating the use of krypton as the sampling medium to improve the resolution further. Krypton option parameters are provided in the attached figures.

The calorimeter is divided into three cylindrical sections: a barrel and two endcap sections including the forward calorimeters. The total weight of the barrel section is 891 Mg and each endcap is 626 Mg, including 19 Mg for each of the forward calorimeters.

Electromagnetic Calorimeter

Strict adherence to physics goals leads to an EM section design with 25 X_0 in the barrel and 28 X_0 in the endcap since the mean energy is higher there. The absorber plates are a composite of lead, prepreg and stainless steel skins. The EM calorimeter covers the region $-3 < \eta < 3$.

Electrode Structure: The EM calorimeter will utilize the accordion design with signals collected on electrodes which are transmission lines. These electrodes also sum the signal longitudinally. In the GEM design there are 4 cells per tower and the granularity in the η, ϕ directions is 0.032 x 0.032. Each tower will be segmented into two sections longitudinally: 8 and 17 X_0 at $\eta = 0$. The transverse and longitudinal segmentation allows one to get excellent position resolution at the face of the calorimeter and to be able to point back to the vertex with an angular resolution of ~6 mrad at 120 GeV. There will be ~60,000 EM channels.

Readout: The readout chain for the calorimeter will consist of a JFET pre-amp that will be placed inside the LAr calorimeter and able to survive more than 200 Mrad. The shaping amplifiers will be located in standard crates on the central membrane outside the magnet coil.

Twenty-five towers (5 x 5) are added together for an EM trigger tower (0.16 x 0.16).

Hadronic Calorimeter

The requirements on the hadronic calorimeter are less stringent than the electromagnetic calorimeter but it is still a formidable challenge to achieve them. The total number of λ at $\eta = 0$ is 12 rising to 14 at $\eta = 3$.

EST electrode structure: In order to match the director capacitance to that of the pre-amp, we are planning to use the "electrostatic transformer" configuration in the hadronic section, by adding layers in series. The absorber material will be copper tiles. The transformer ratio is 4.

Segmentation: The hadronic segmentation is determined by the size of the hadronic shower and the need to match up with the EM granularity. We have thus selected a granularity of 0.08 x 0.08 in η, and ϕ . There are three longitudinal modules with the

following number of absorption lengths: λ_1=3.2, λ_2=3.2, λ_3=3.7. The middle module is divided into two readout sections to reduce the noise.

Readout: The readout for the hadronic section follows the EM very closely. There will be ~27,000 channels in the hadronic section.

Cryostat: The cryostat will be an aluminum alloy with a thickness 0.3 X_0 at the entrance at $\eta = 0$. For the endcap, the total enhance window thickness will be 0.7 X_0. The interface between the barrel and the endcap, from $1.42 \leq \eta \leq 1.64$, will have degraded EM resolution but will have good hadronic resolution.

Installation and Assembly: The hadronic granularity leads naturally to hadronic modules. In the EM section, we envision building mini-modules consisting of about 5 towers or 9° in ϕ. The full barrel will have 200 towers in ϕ. There will be 20 modules in ϕ for the hadronic modules, while the EM in the endcap would be a monolith. The 40 EM mini-modules and hadronic modules will be installed inside the cryostat on site at the SSC Lab. The cryostat itself will then be welded shut. The calorimeter will be fully assembled above ground and tested before being installed in the experimental hall.

Liquid Argon Calorimeter Physical Parameters

Number of absorption lengths	
at $\eta = 0$	12
at $\eta = 3.0$	14
Barrel Dimensions	
inner radius	0.76 m
outer radius	3.60 m
Lateral segmentation	
EM	0.032 x 0.032
HAD	0.08 x 0.08
Longitudinal segmentation	2 EM, 4 HAD

Lead Liquid Argon/EM Calorimeter

Absorber material	1.9 mm (0.2mm SS/0.1mm prepreg/ 1.3mm Pb/0.1mm prepreg/0.2mm SS)
Readout Board	0.4mm (Cu/kapton/Cu/kapton/Cu)
Sense Material	2 x 2 mm Argon
Lateral segmentation (η, ϕ)	0.032 x 0.032
Longitudinal segmentation	2(8 X_0, 17 X_0)
Inner Radius (cryostat/accordion)	760/890 mm
Outer Radius (accordion)	1412 mm

Radiation Length	25 X_0 at $\eta = 0$; 28 X_0 at $\eta = 3$.
Absorption Length	1.3 λ
Number of Channels-Total	60,000
Readout Device	JFET preamplifier (75 mW / channel)
Weight of Barrel	59 Mg
Weight of Each End Cap	19 Mg

Liquid Argon/Copper Hadron Calorimeter

Lateral segmentation (η, ϕ)	0.08 x 0.08	
Longitudinal segmentation	4	
Dimensions		
Inner Radius (active)	1,489	mm
Outer Radius (active)	3,445	mm
Length (excluding forward)	11,000	mm
Copper Absorber Thickness (fine/coarse)	9/16	mm
Sense material: Argon	2	mm
G10 Thickness	2 x 0.5	mm
Readout Channels - total hadron	27,000	
Assemblies (including EM and vessel)	3	each
barrel Weight	891	Mg
End Cap Weight (each)	626	Mg
Forward (each)	19	Mg
Total	2,142	Mg
Liquid Volume		
Barrel	40,000	liters
End cap (each)	27,000	liters
Reserve in head vessel	3,600	liters
Reserve	6,000	liters
Total	104,000	liters
Total number of channels	87,000	

LIQUID ARGON CALORIMETER - 12 X 14 LAMBDA, FLAT ENDCAP HEAD

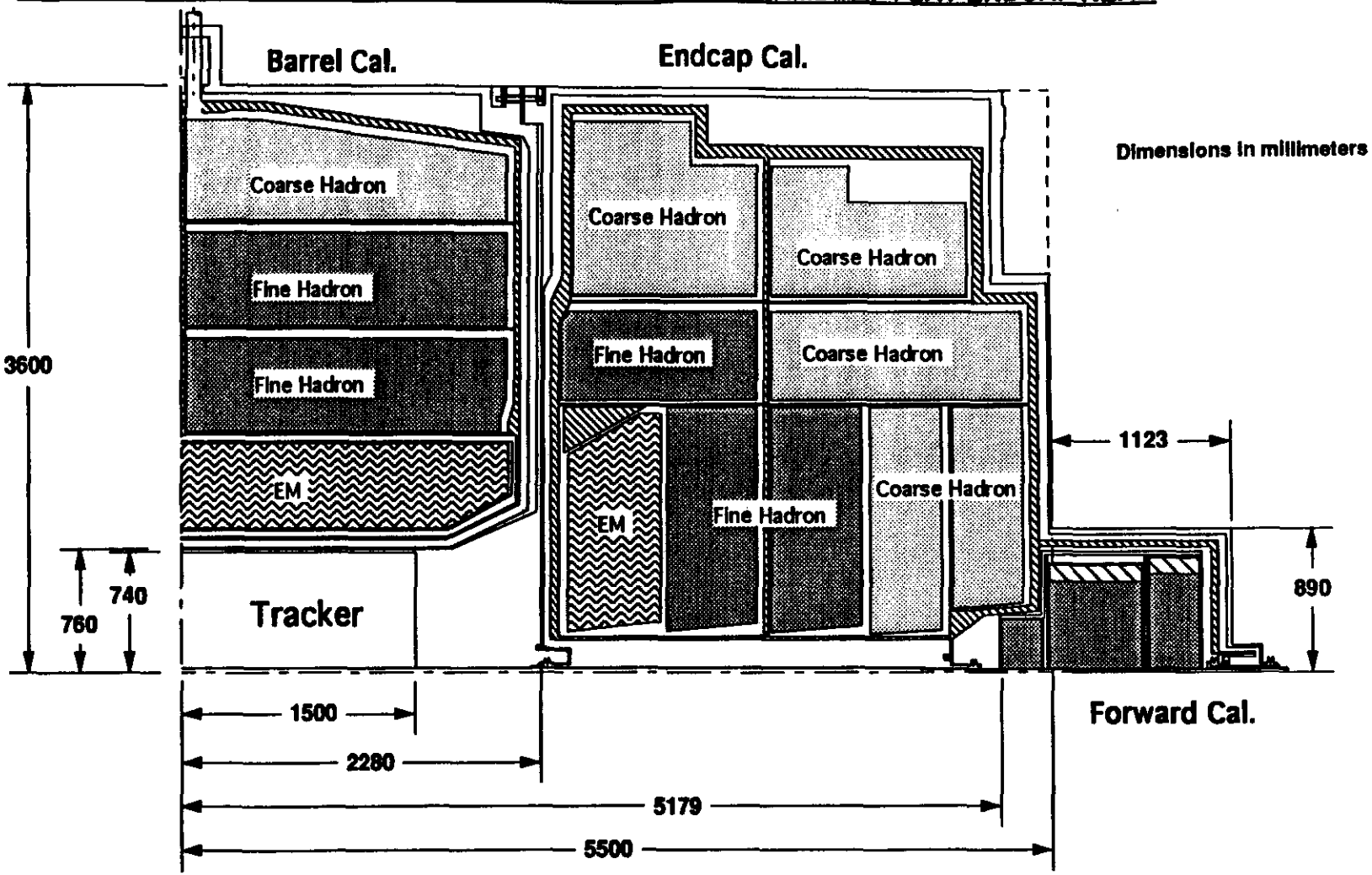

In general the noble liquid calorimeter consists of cryogenic noble liquid vessels, multiple layer insulation, vacuum vessels, supports, EM modules, fine hadronic modules, coarse hadronic modules, a thermal control system, a fill and drain system with pressure control, electronics and instrumentation cabling.

The baseline configuration is the 12 x 14 lambda version with a flat endcap head. This is a liquid argon calorimeter with a barrel diameter of 7.2 meters. The barrel length is approximately 4.5 meters and weighs about 891 Mg. The endcap also uses liquid argon and is 7.2 meters in diameter. Each endcap is approximately 4.3 meters long and weighs about 626 Mg (includes the forward calorimeter weight of 19 Mg).

LLMASON 920620 BASELINE.LAC

Hadron Module # 2

Six Cells Depth
Segmentation $\Delta\eta \times \Delta\varphi = 0.08 \times 0.08$
80 Modules Required
Wt. = 2.38 MT each
Each Module Contains the Following:
1 - Top Ground Plate
1 - Bottom Gnd Plate
5 - Included Gnd Plates
36 - Tile Plates
Containing 948 Tile
6 - Sensing Plates
Containing 258 Tile
1 - Strongback
1 - Structural Shell
2 - End Plates
28 - Towers with Strip Lines and Electronics
X - Mother Boards

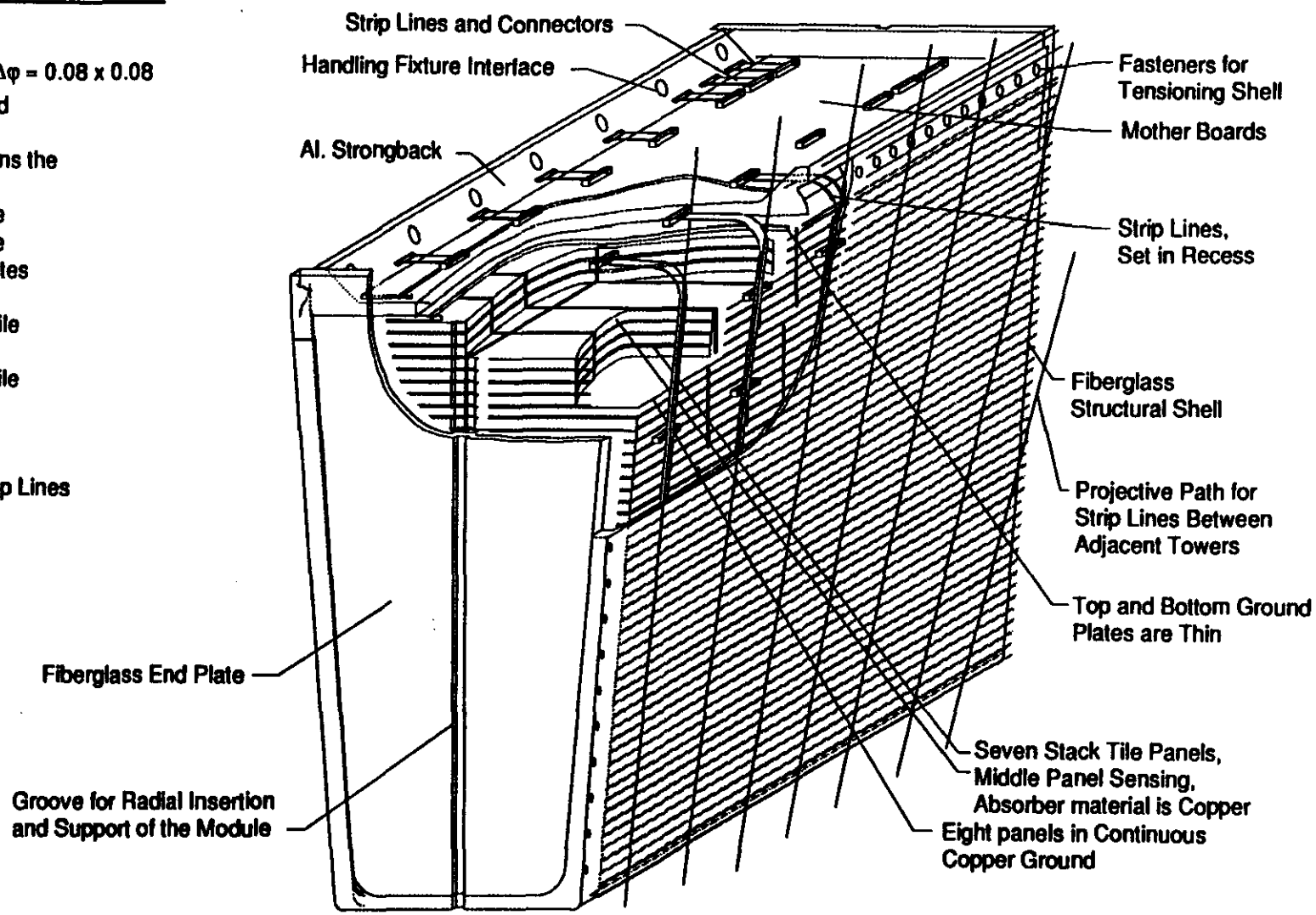

This shows the composition of a typical hadronic module. The detailed tolerance stack-up of these hadronic modules within the liquid argon calorimeter is addressed in a later section of this report (Reference Figures 2-1 thru 2-1).

005

LLMason GEMLAC.HadModDetail 4/18/92

Barrel EM Module

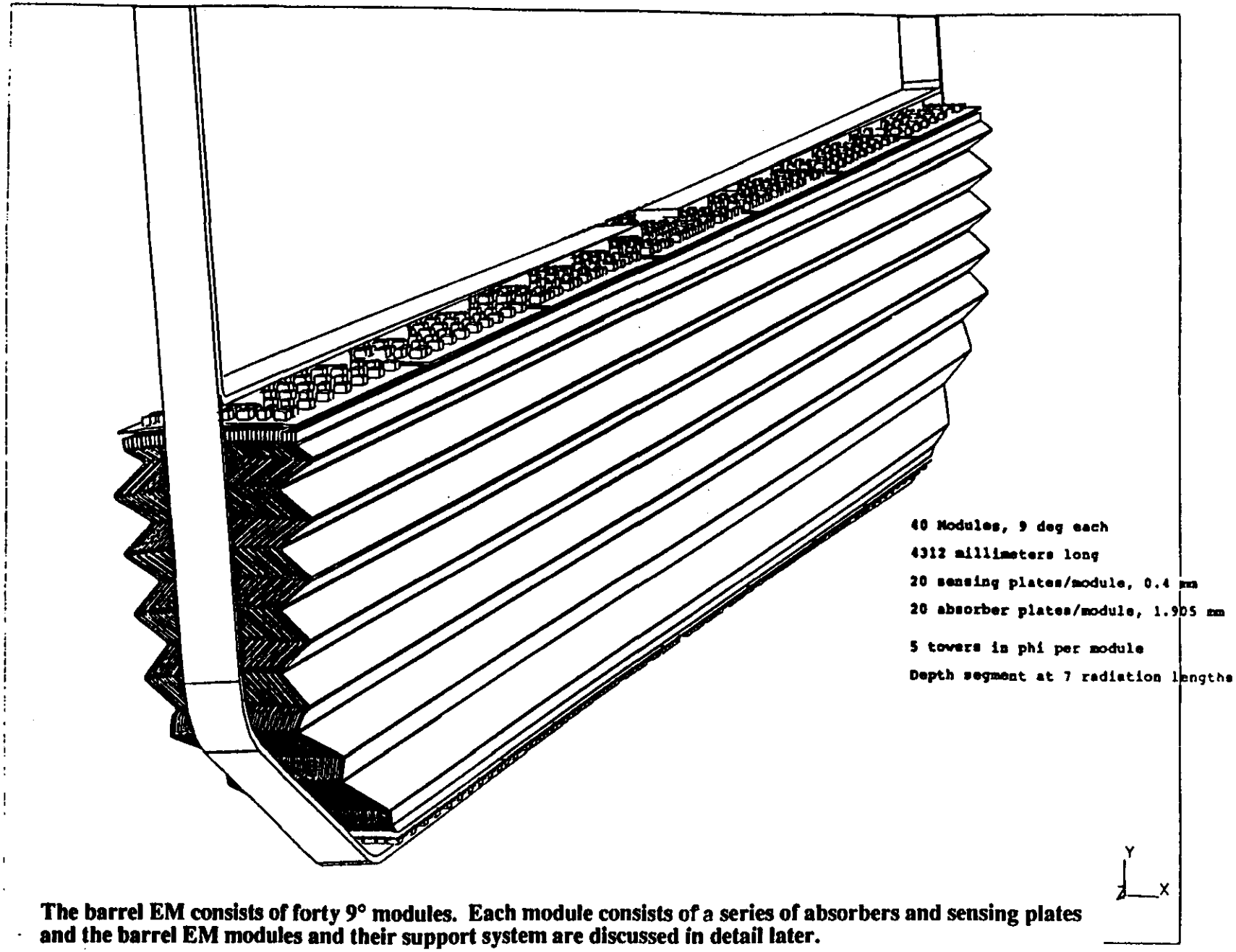

The barrel EM consists of forty 9° modules. Each module consists of a series of absorbers and sensing plates and the barrel EM modules and their support system are discussed in detail later.

Endcap EM Module

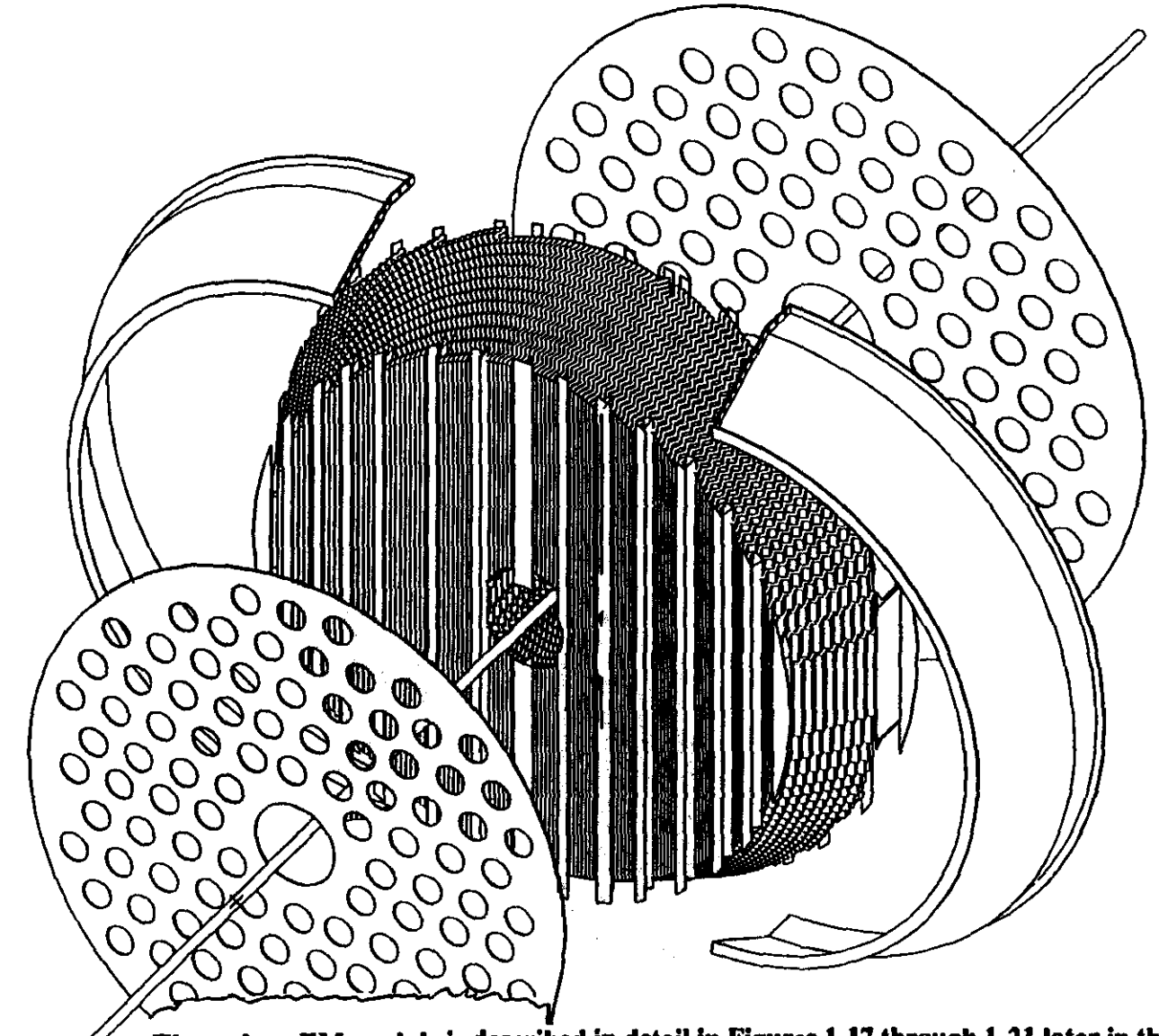

The endcap EM module is described in detail in Figures 1-17 through 1-21 later in this report and its components, assembly and support technique will also be covered. The accordion EM is supported by stiffeners and is surrounded by an aluminum flange and then the ends are closed off by perforated G10 face plates to allow communication of the cryogenic fluid.

LAr Plug/LKr Barrel Calorimeter

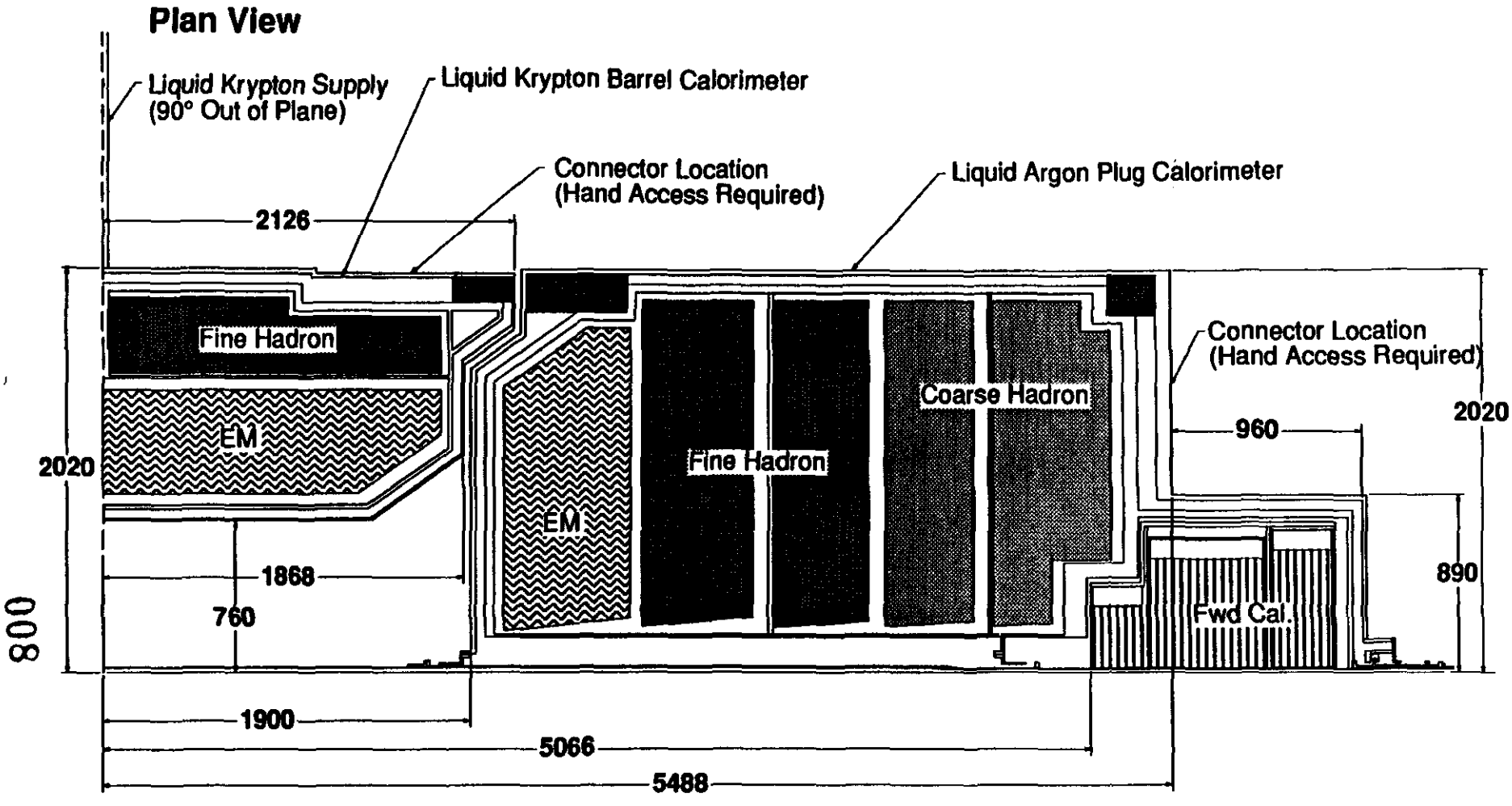

Two other options are being evaluated along with the baseline liquid argon calorimeter design. These options are the liquid argon plug/ liquid krypton barrel configuration and the EM only configuration.

The liquid argon plug / liquid krypton barrel configuration consists of a barrel containing EM and fine hadronic modules enclosed in a vacuum vessel that is approximately 4 meters in diameter and approximately 3.8 meters long. The endcap plug contains EM, fine and coarse hadronic modules that lie in a envelope of approximately 4 meters in diameter and approximately 4.5 meters length. The plug is liquid argon like the baseline but the barrel uses liquid krypton to improve the resolution.

Even though the following discussion refers to the baseline configuration, many aspects are similar and still would apply to the liquid argon plug / liquid krypton barrel configuration.

KRBarrstable EMHad Barrel/Plug

EM BARREL / EM ENDCAP LKr CALORIMETER

A third option consists of only EM modules both in the barrel and in the endcap. This version uses liquid krypton in both the barrel and the endcap to enhance the overall resolution. The barrel EM is approximately 3.8 meters long with a diameter of approximately 3.3 meters. The endcap is slightly greater in diameter at approximately 4 meters and is only 1.2 meters long. This option also benefits from the solutions to the following questions although the main focus is on the baseline configuration.

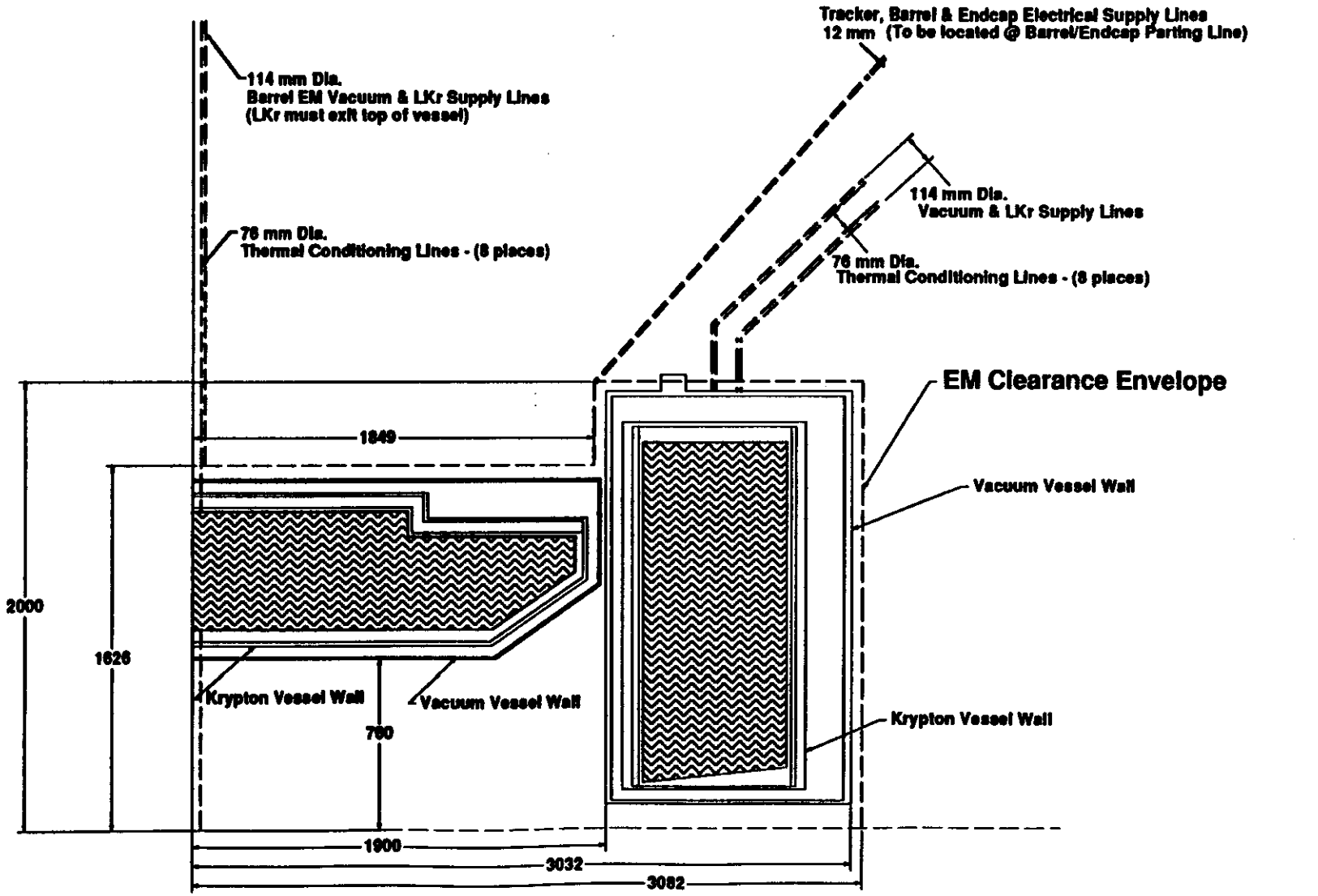

KRBarrstable LKr EM/EM Concept2

Calorimeter Engineering Question

1. ***Liquid Krypton EM Calorimeter Support***

Request: *Provide proof-of-principle structural designs for the barrel and endcap accordion EM calorimeters.*

Specific Concerns:
- *The load path from the barrel accordion plates to the G-10 ribs to the vessel walls is not understood.*

Answer:
- *See Attached Data.*

Specific Concerns:
- *The structure of the individual barrel EM modules prior to assembly is not understood. The module structure will have to be capable of not only supporting the module during handling and shipping; but, it will be required to provide for the transfer of the load to the final assembly structure.*

Answer:
- *See Attached Data.*

010

Data:

Barrel EM Calorimeter Modules:

- The barrel concept for the EM accordion consists of 40 modules, each module extending the full length of the barrel calorimeter. Each 9 degree module stack starts with an absorber plate and ends with a sensing plate with spacer bars at the inner and outer radii. The plate stack is pinned together at the inner and outer radii through the plates and spacer bars and held with fasteners to form a module (reference Figure 1-1).
  The ends and middle of the absorber plates have composite filler strips approximately one cm long in the z direction with the thickness matching the krypton gap extending from the inner plate radius to the outer plate radius (reference Figure 1-2) Each absorber plate consists of lead plates bonded to stainless steel skins with prepreg (reference Figure 1-2a). These filler strips form a continuous washer at Z= 0 and at Z=±2045.5mm when all the modules are assembled. The filler strips also provide the structural integrity for a single module as shown in Figure 1-2b. Hexcel is placed between the flat surfaces of the absorber and sensor plates to provide a minimum high voltage gap between the plates (not a structural element).
  At the ID and OD of the module some of the inner and outer spacer strips are projected beyond the rest of the spacer bars to form flanges (reference Figures 1-3, 3a, and 3b). These flanges support the modules during shipping and handling and also tie adjacent modules together and provide support for the calorimeter assembly.

Barrel EM Calorimeter:

- Clevis fittings are installed over adjacent module flanges with fasteners inserted through them to act as stays while holding the modules together (reference Figure 1-4). The outer fittings are used to support the modules in the radial and hoop direction. The inner fittings are guided radially. The fittings, filler strips, plates rings, inner and outer spacer bar and absorber plates form the structure of the module.
  Figures 1-5 through 1-7a show a module assembly and a portion of two calorimeter halves prior to forming a completed assembly. Also depicted are the proposed cable bundle layouts and the electronics. The barrel EM calorimeter is supported in the radial and hoop directions at its outer clevises. At the inner clevises the barrel EM calorimeter is guided in the radial direction.
  The composite material for the outer spacer bars will be selected such that the outer surface contracts with the calorimeter vessel. The composite material for the inner spacer bars will be selected such that the inner surface contracts with the inner edge of the accordion plates.

Figure 1-1. Barrel EM Module Assembly
The Barrel EM concists of 40 identical modules, 9 degrees each. Each Module contains 20 sensor plates, 20 absorber plates, spacers and fasteners such that each module is self-supported. Adjacent modules are fastened together with clevises and tie rods on both the inner and outer radii. The inner and outer clevises also attach the Barrel EM to the cryostat.

Figure 1-2. Barrel EM Module Absorber Plate
Each Absorber Plate includes spacers at each end and also at the center. The spacers are 1-2 cm wide and nominally 2 mm thick. Absorber plates near the 9 deg boundries will also have Flange Tabs. The Clevises are attached to the flange tabs.

Figure 1-2a. Barrel EM Module Absorber Plate Laminate
This close-up of the absorber plate shows Stainless Steel (0.2mm) bonded with prepreg (0.1mm) to both sides of the Lead plate (1.3mm). TBD mm of Lead is removed from the inner edge and replaced with a G10 insert to perform as a "massless gap".

Figure 1-2b. EM Module Structural Elements
This is similar to Figure 1-2 except that all sensor plates and all but one absorber plates are removed to better illustrate the internal structure of the module.

Figure 1-2c EM Module equivalent internal structure
The principle behind the internal support system of the Barrel EM is the spacers in the completed system form 3 continuous "washers" internal to the accordion EM. The inner and outer spacer bars form continuous "cylinders" on the inner and outer radii.

Figure 1-3. **Module Flange**
Close-up of the composite filler strip and flange.

Figure 1-3a. **Typical Module Lay-up in Section**
Cross-section of a Barrel EM Module at Z=0 showing the attachments of plates to clevises to cryostat walls. The outer clevises slide within extruded channels in the outer wall.

Figure 1-3b. **Fasteners Within a Module**
Inner and outer module fasteners are curved tubes that are flared on one end, inserted into the module and flared on the other end which holds the module together without protruding beyond a module's 9 degree envelope. Alignment pins are used to prevent the curved fasteners from becoming straight as they are tensioned.

Figure 1-4. **Flange, Clevis and Tie Rods at the outer radius**
Close-up of the out er support system showing tie rod and clevis assembly.

Figure 1-4a **Flange, Clevis and Tie Rods at the inner radius**
Close-up of the inner support system showing tie rod, clevis and alignment pin assemblies.

Figure 1-5. **Assembled Module Showing Cabling Bundles**
Electronics are shown on the inner and outer surfaces of the EM. Wire bundles are also shown.

Figure 1-6. **Close View of Module**

Figure 1-7. **Partial View of Modules Assembled in Halves**
The modules are assembled into halves vertically. The two halves can then be attached together into a complete barrel EM.

Figure 1-7a. **Assembly of the EM into the Barrel Calorimeter**
The barrel EM is rotated from vertical to horizontal and inserted into the Barrel Calorimeter. The inner cryostat is inserted into the Barrel EM. Each alignment pin and plug (not shown) is inserted through a hole in the cryostat cylinder and into the inner clevis. The alignment plug is then welded to the cryostat cylinder.

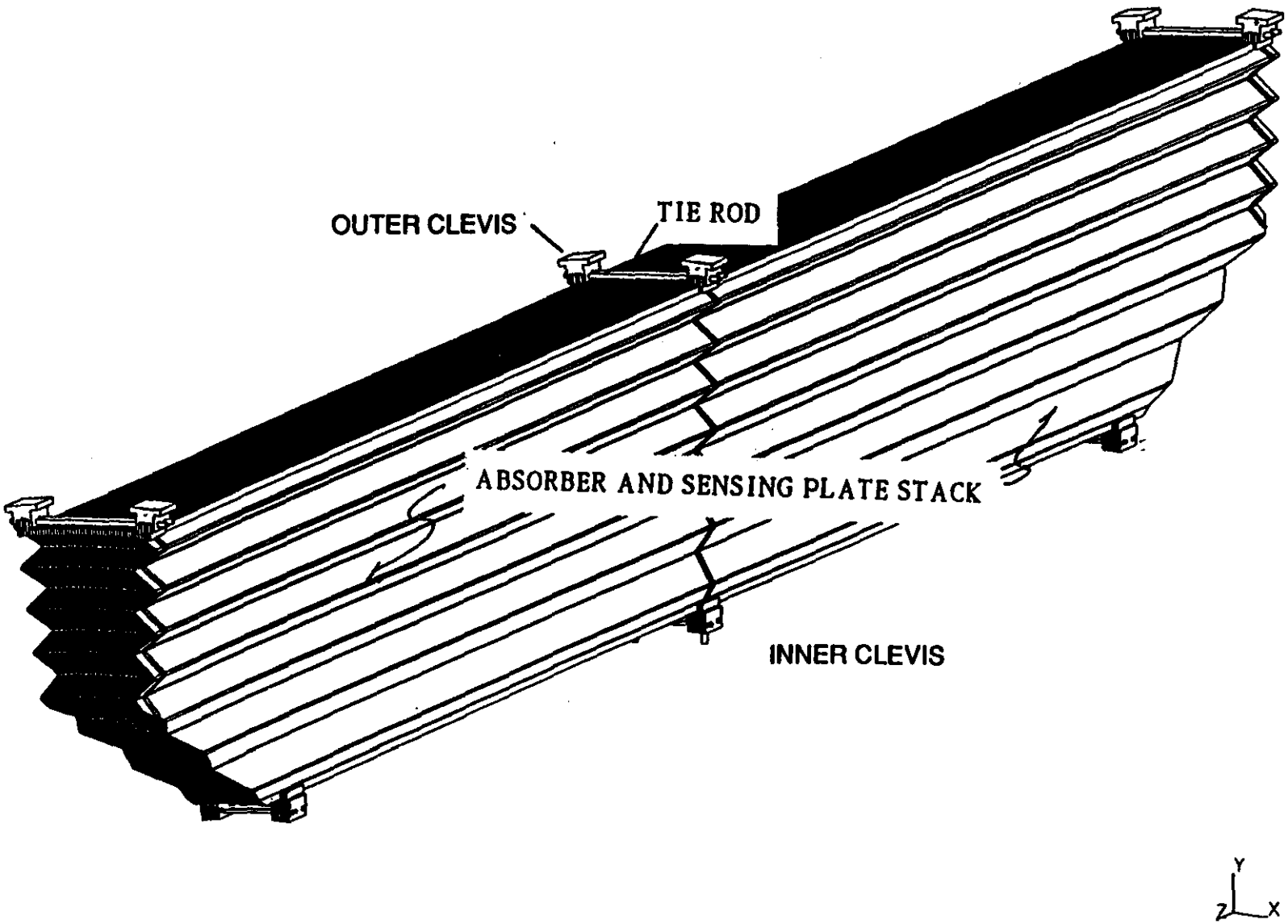

Figure 1-1 Barrel EM Module Assembly

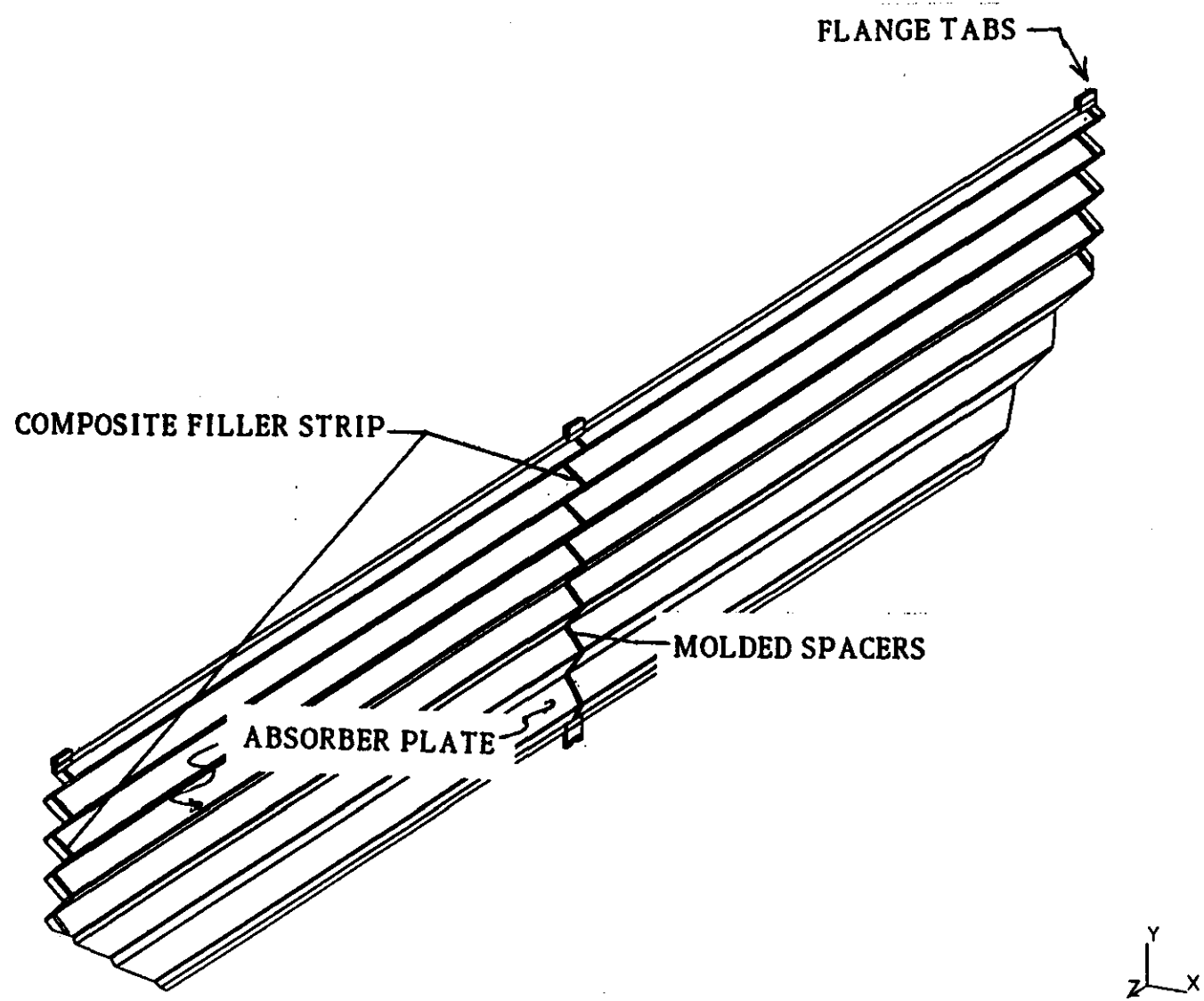

Figure 1-2 Barrel EM Module Absorber Plate

Layers of the Accordion Absorber plate

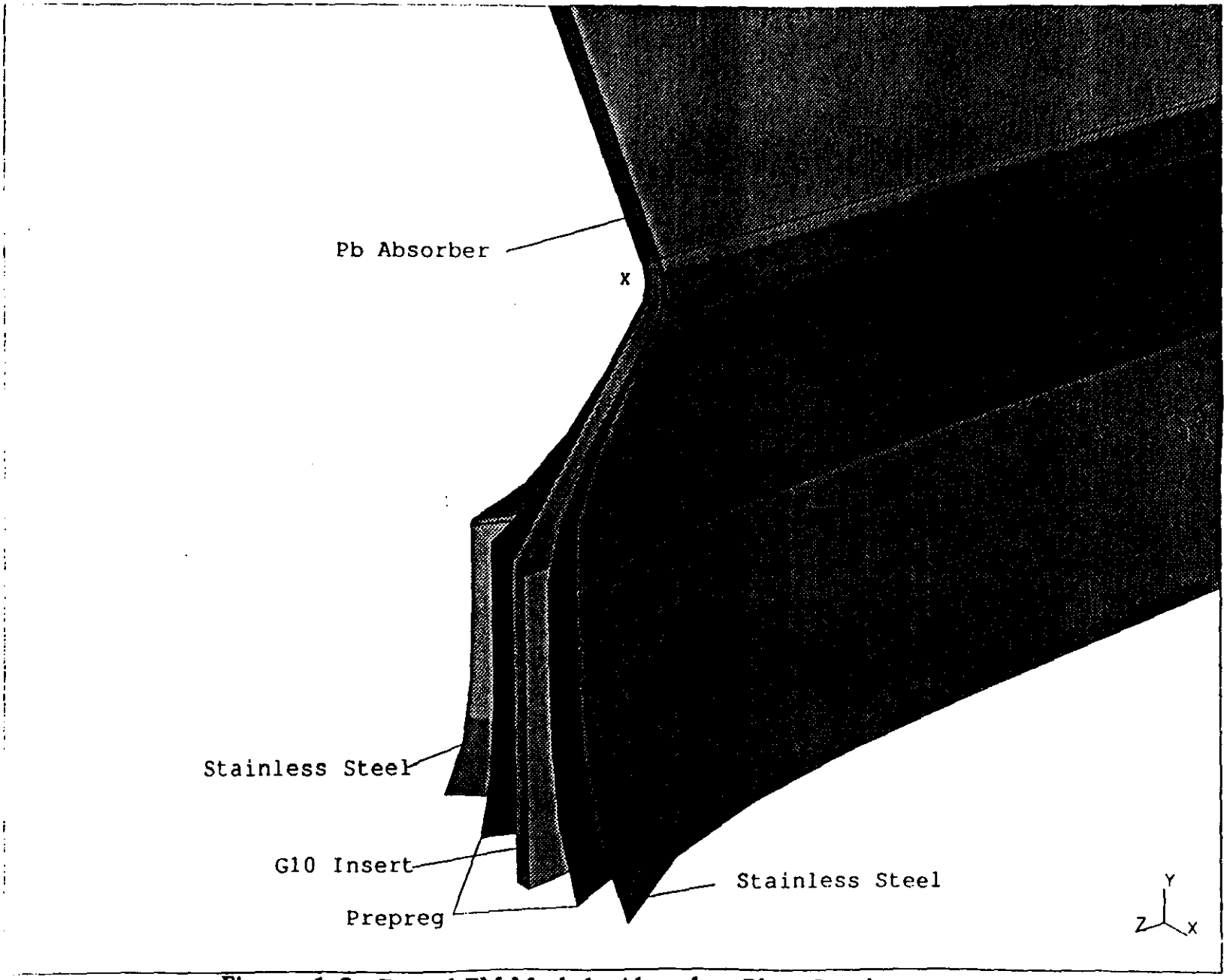

Figure 1-2a Barrel EM Module Absorber Plate Laminate

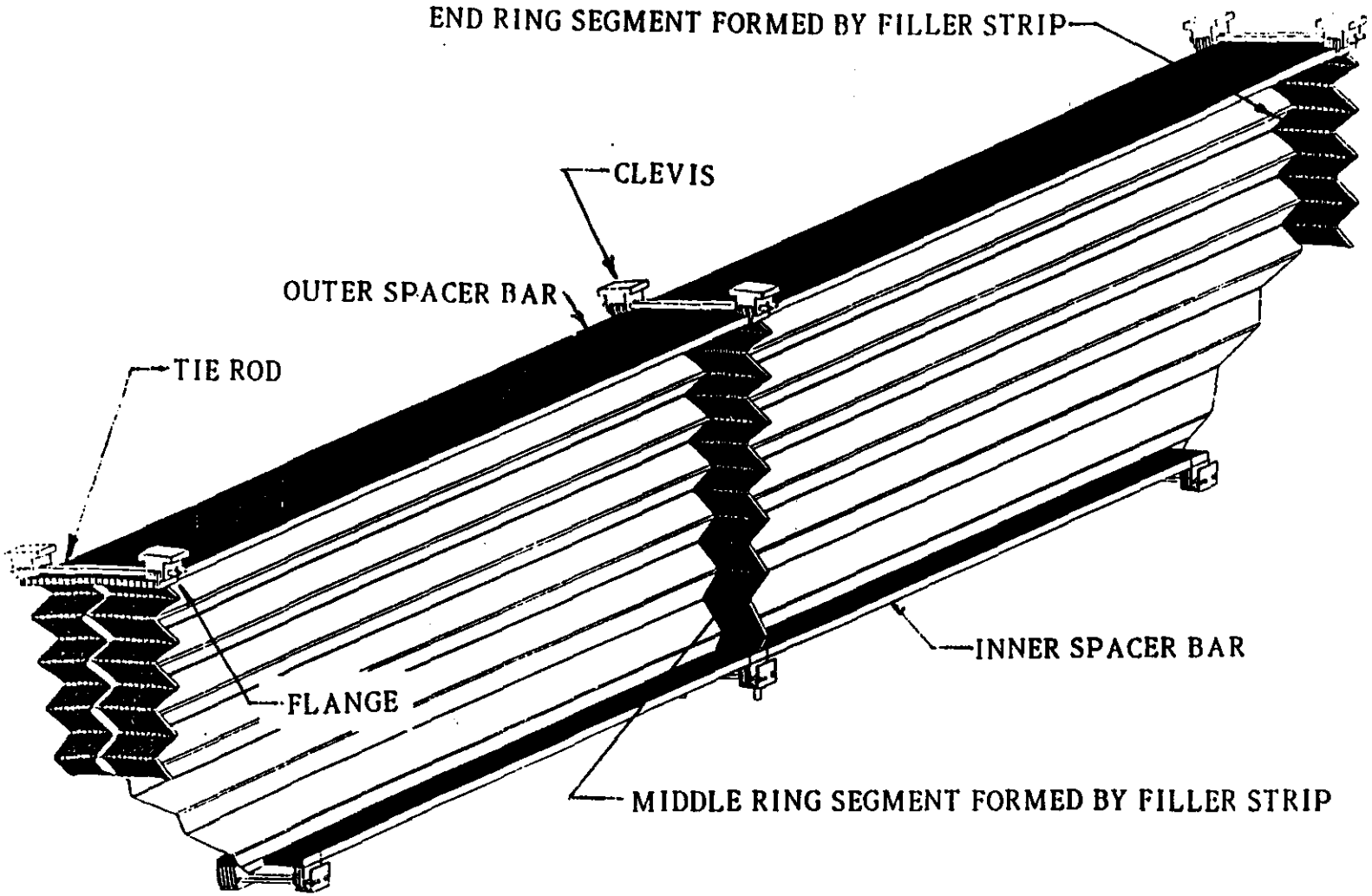

Figure 1-2b EM Module Structural Elements

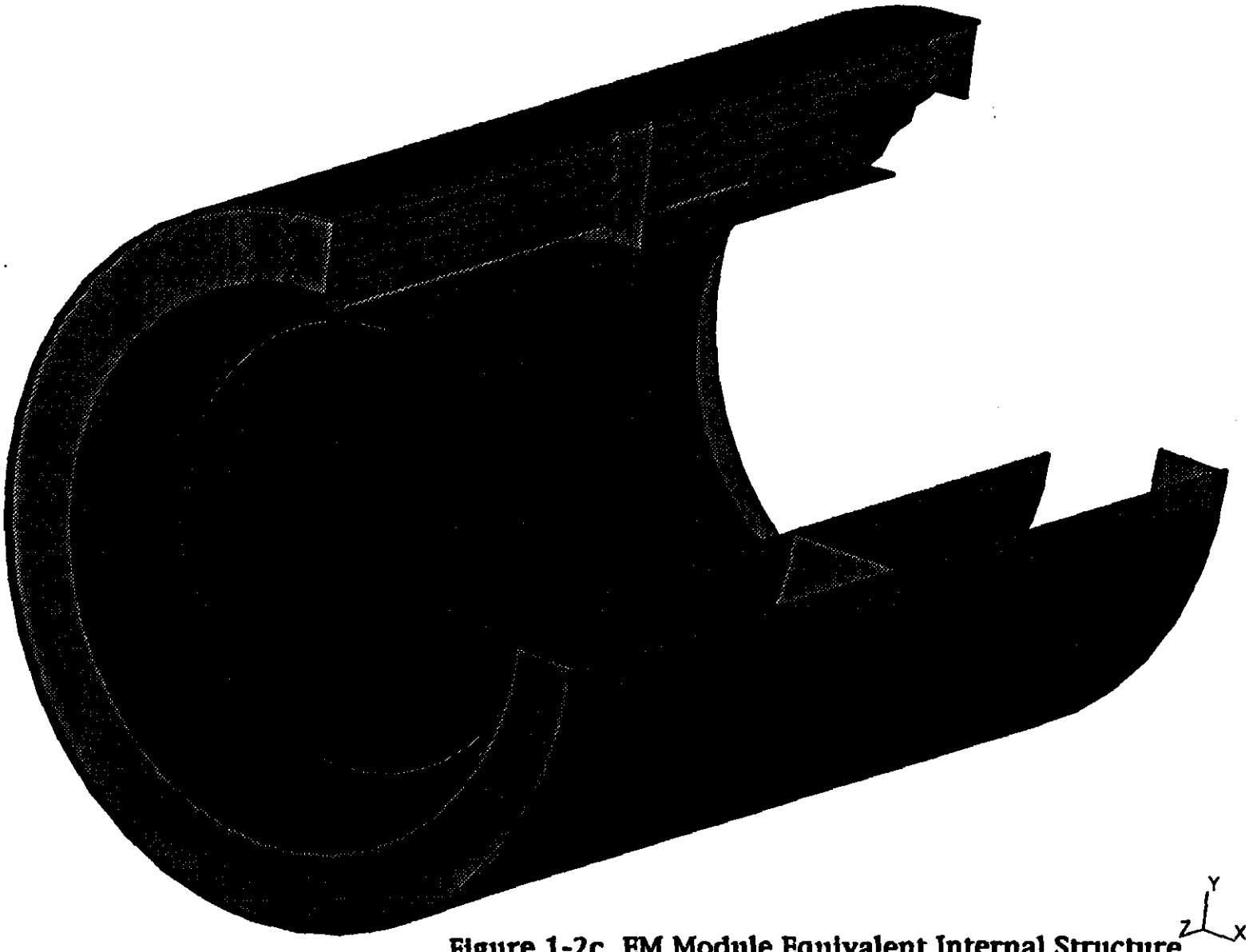

Figure 1-2c EM Module Equivalent Internal Structure

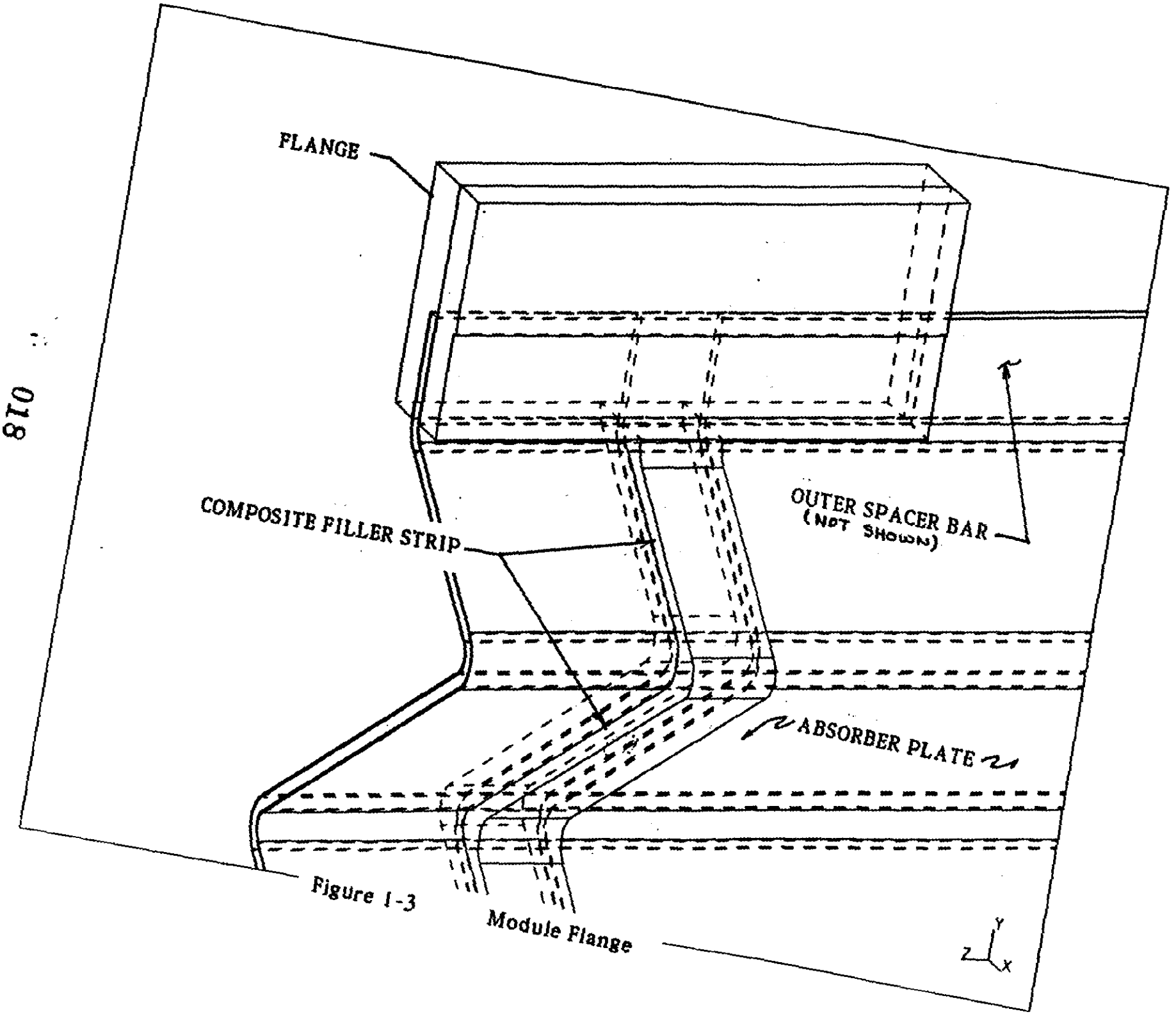
FLANGE
COMPOSITE FILLER STRIP
OUTER SPACER BAR
(NOT SHOWN)
ABSORBER PLATE
Module Flange
Y
Z
X

Figure 1-3

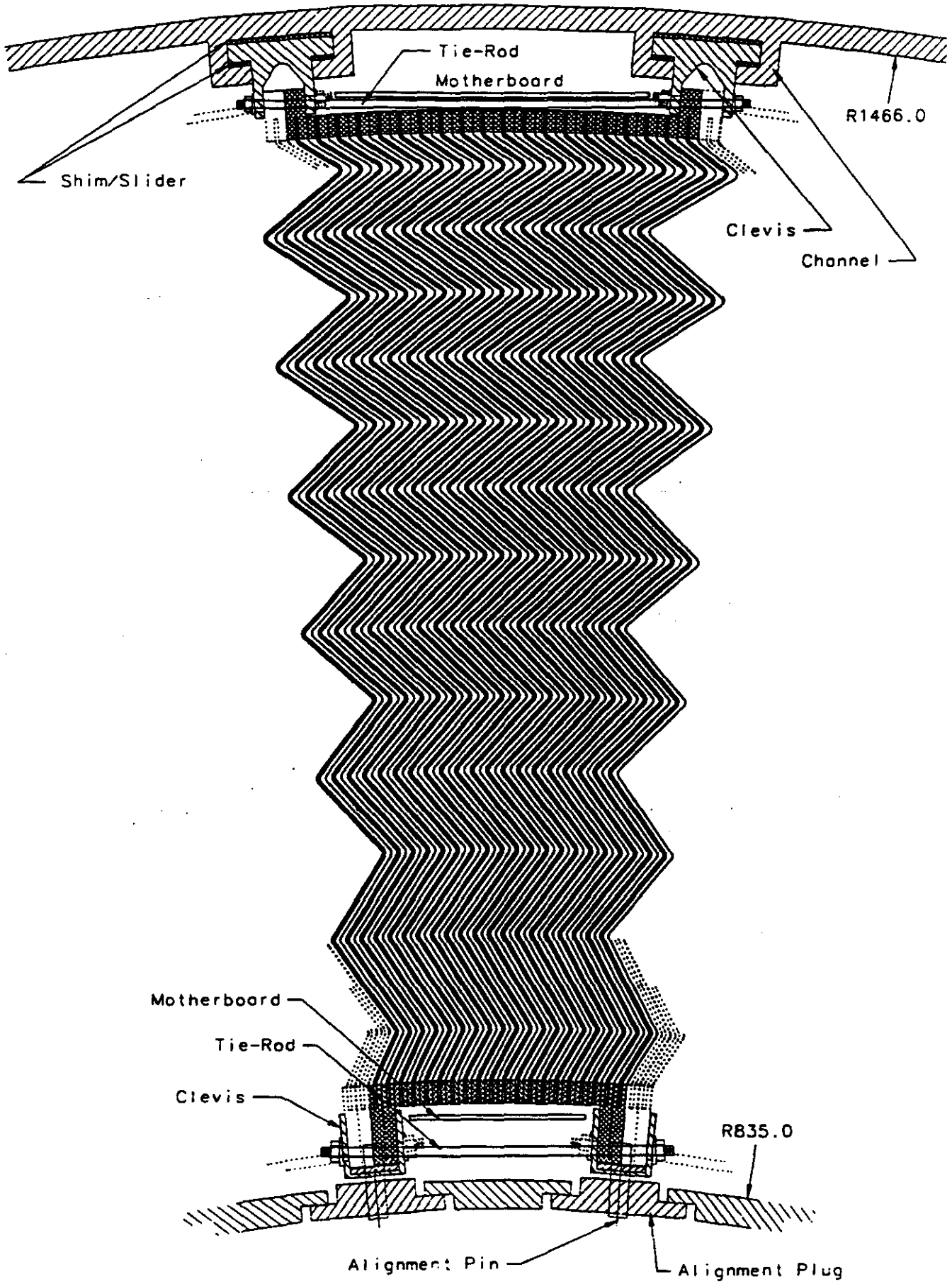

Figure 1-3a. Typical Module Lay-up in Section

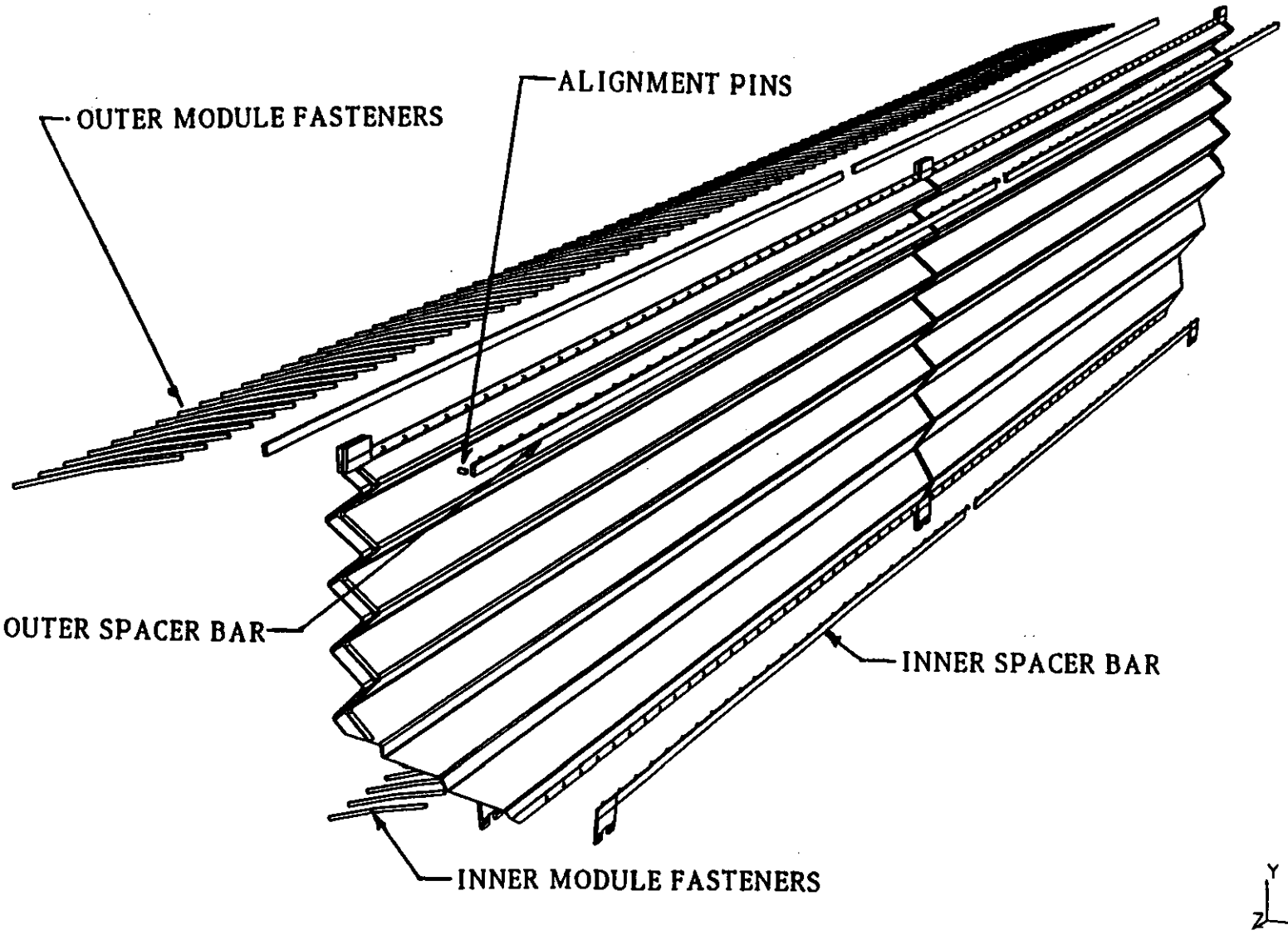

Figure 1-3b Structural and Massive Components of Module

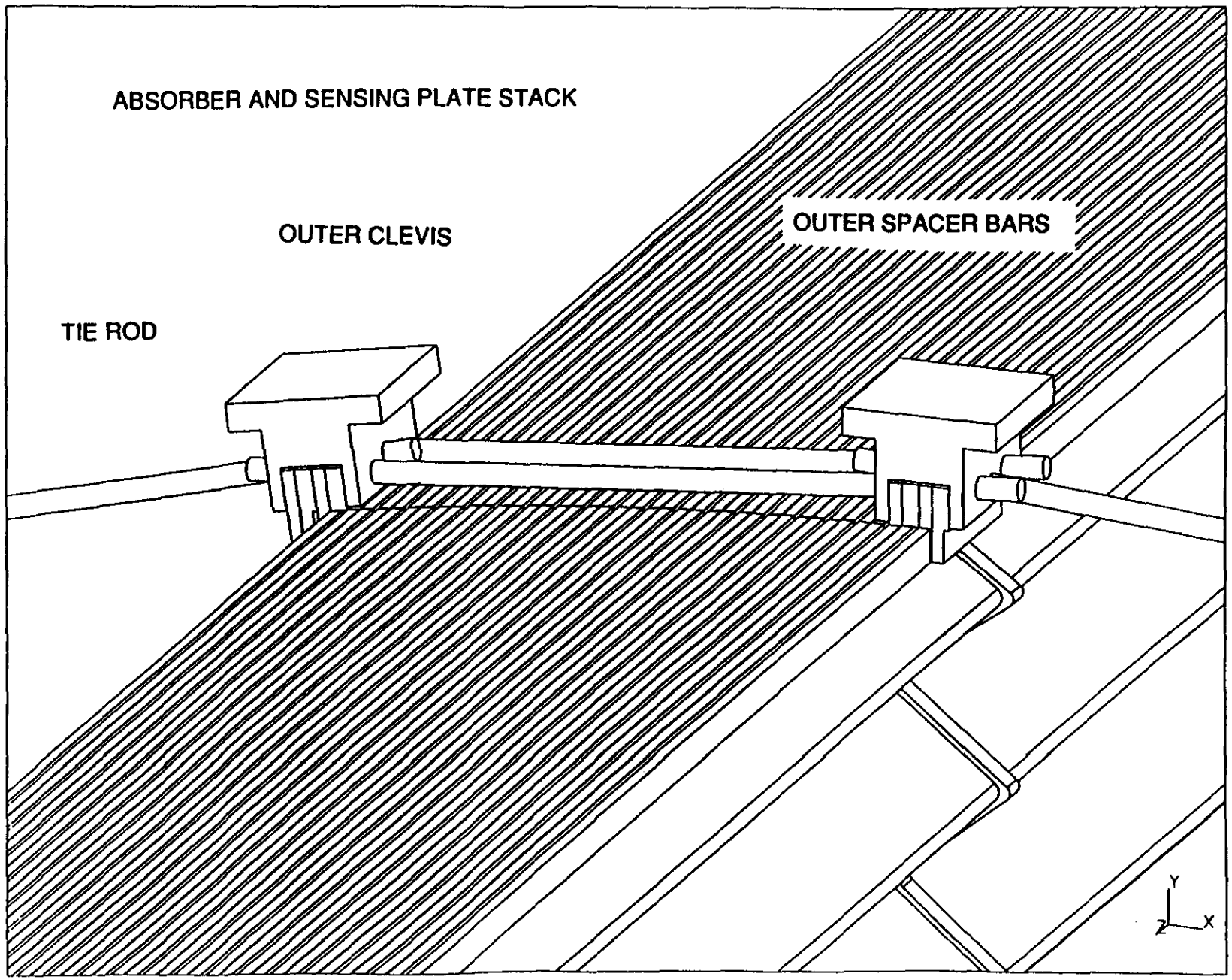

Figure 1-4. Flange, Clevis and Tie Rods at the outer radius

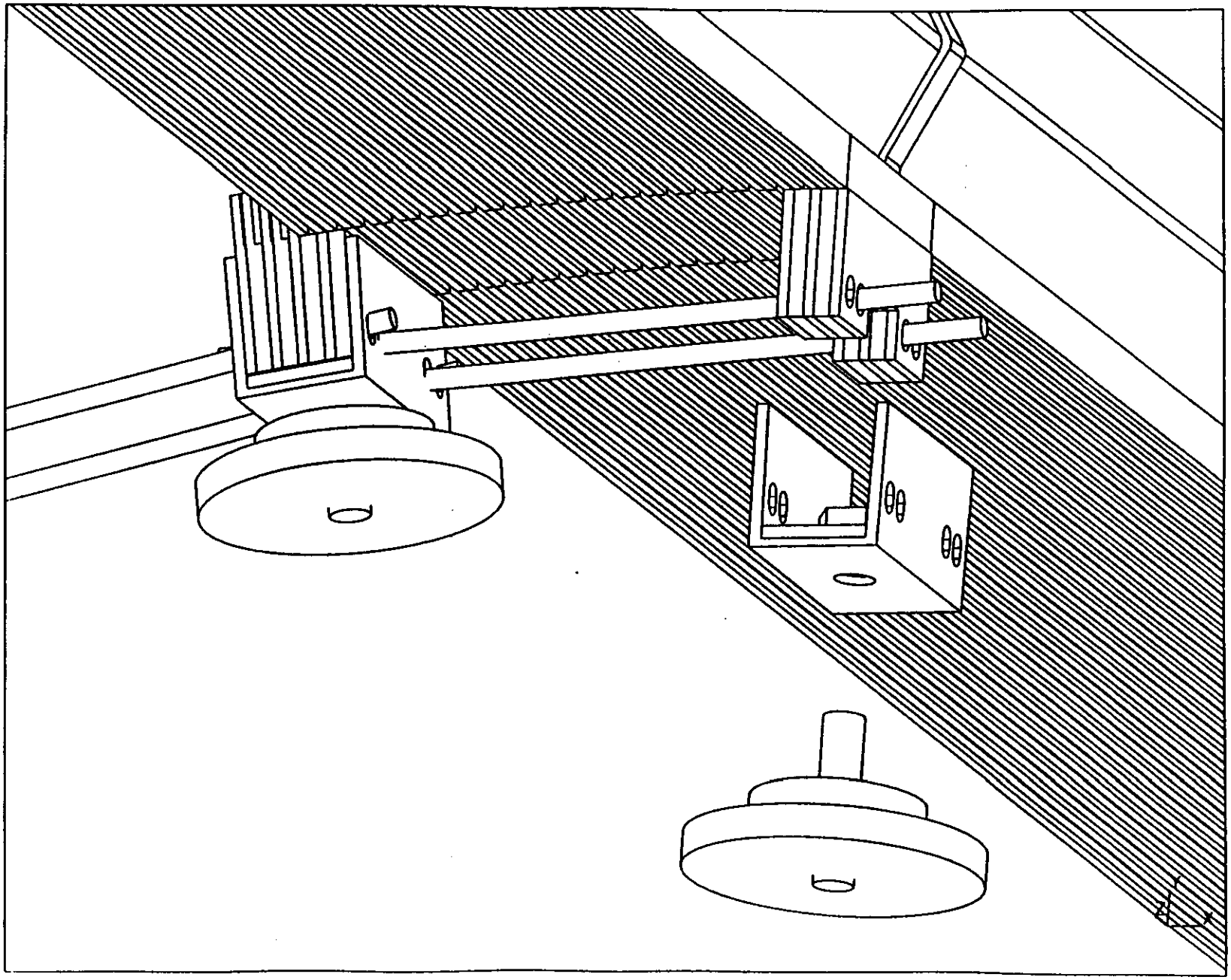

Figure 1-4a Flange, Clevis and Tie Rods at the inner radius

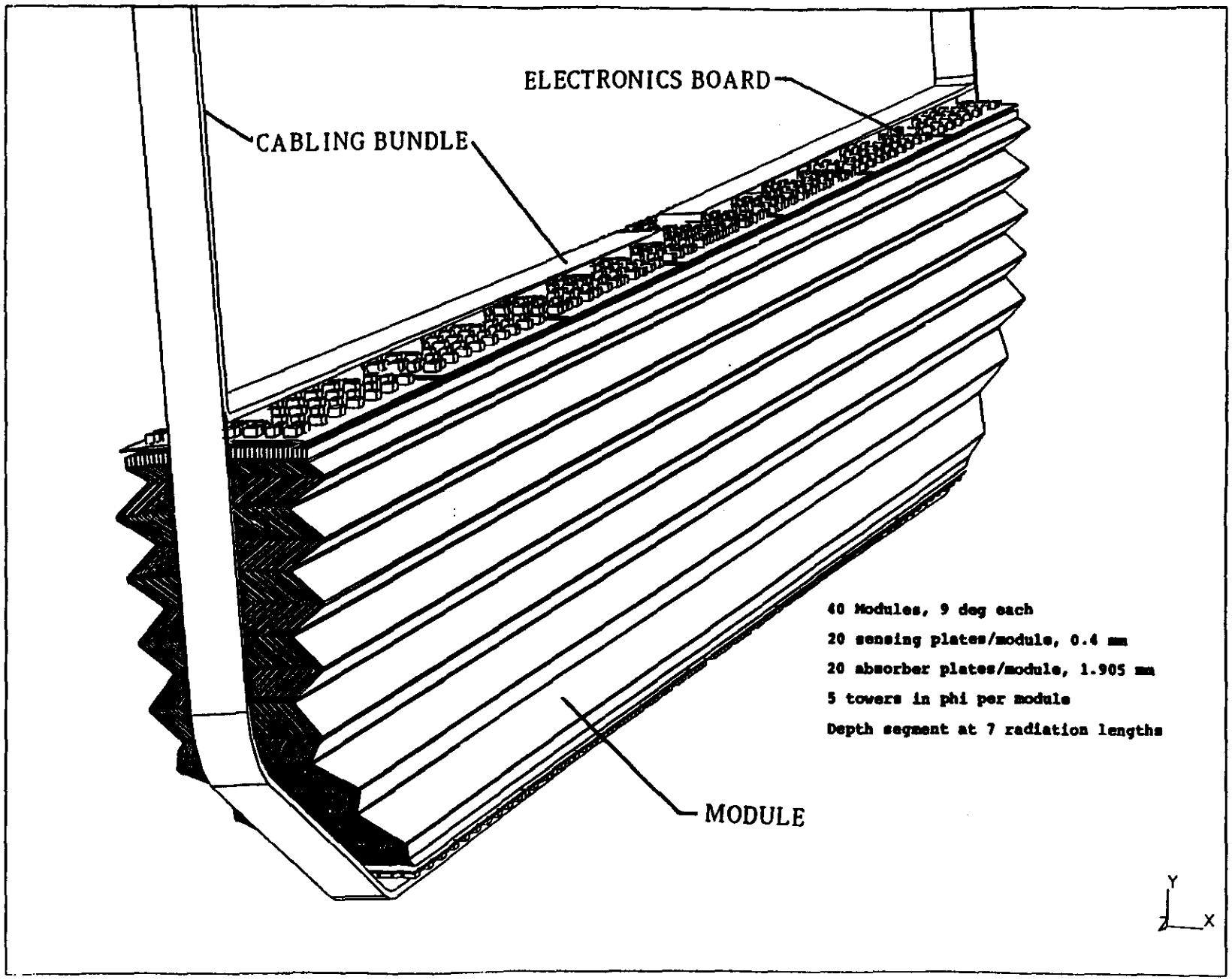

Figure 1-5. Assembled Module Showing Cabling Bundles

Closeup of the Barrel Accordion showing Electronics, Stripline, and Plates

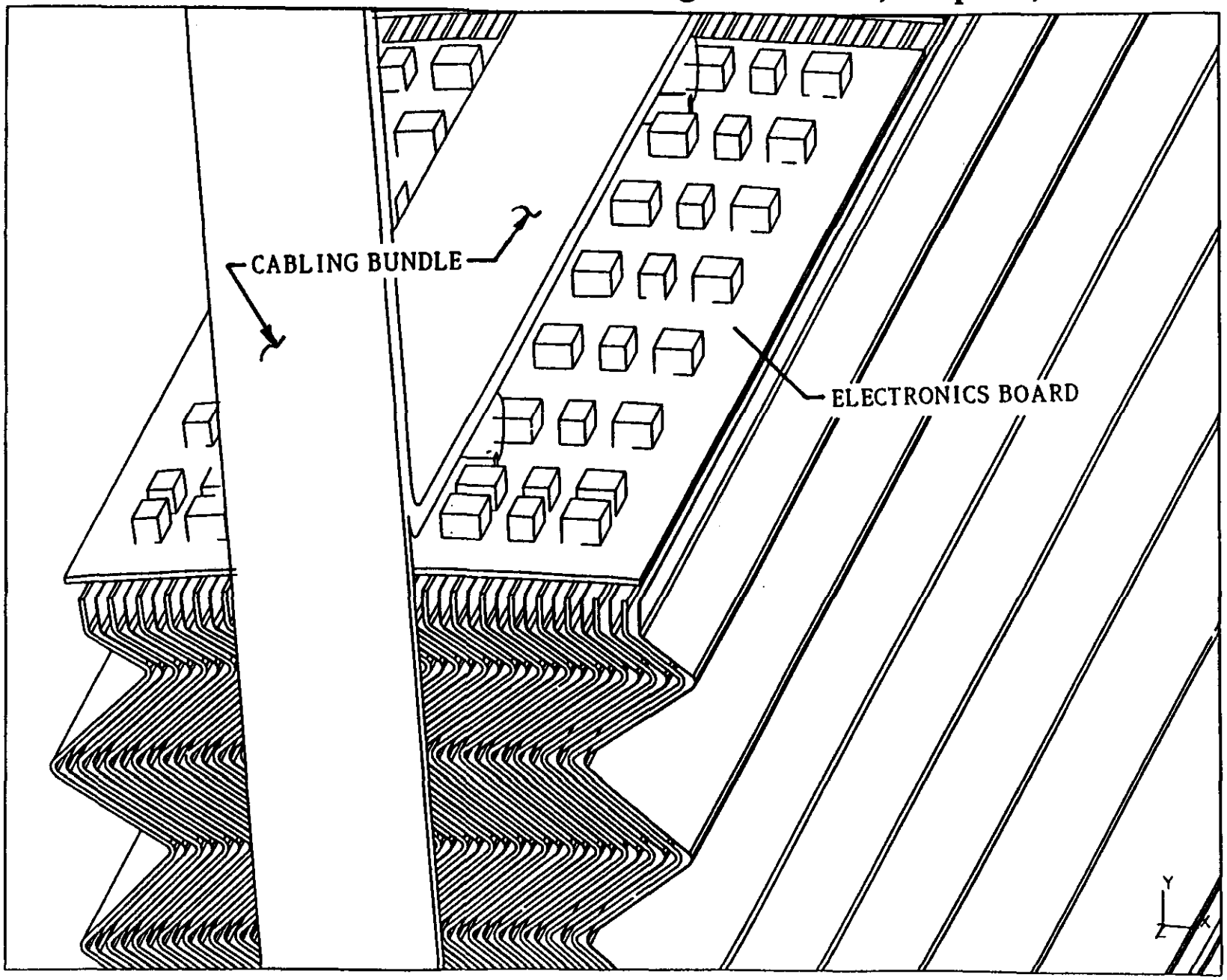

Figure 1-6. Close View of Module

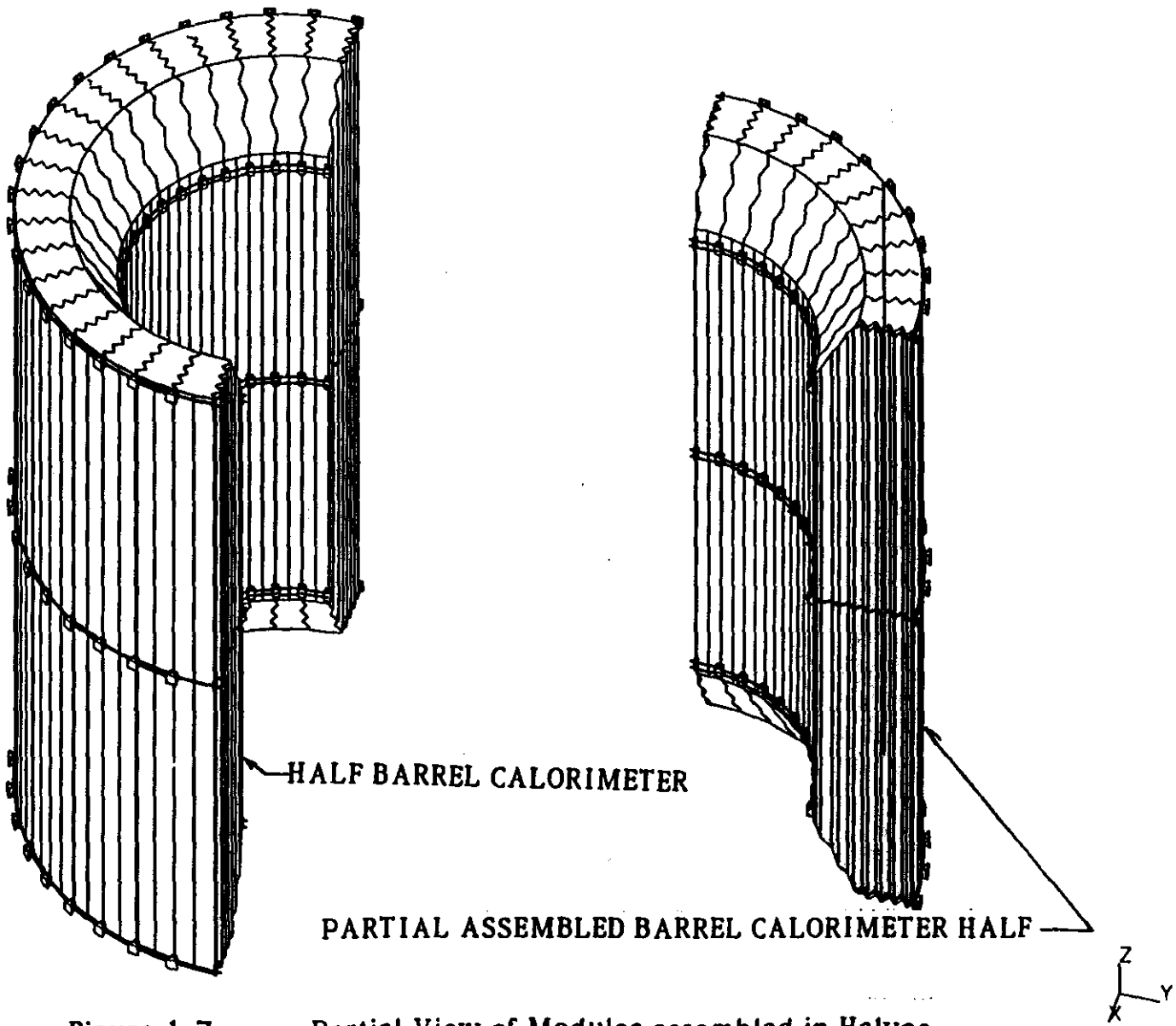

Figure 1-7 Partial View of Modules assembled in Halves

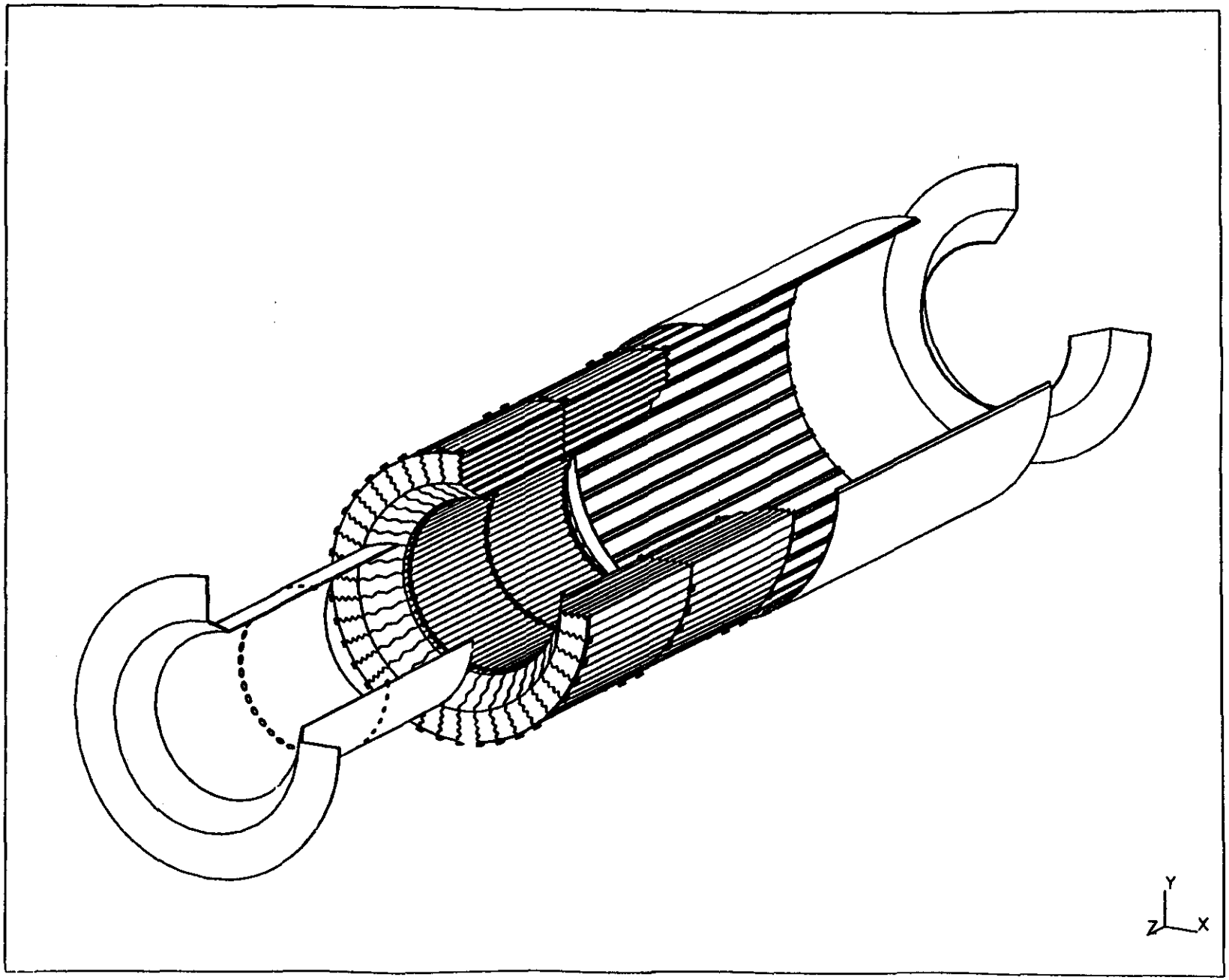

Figure 1-7a. Assembly of the EM into the Barrel Calorimeter

Calorimeter Engineering Question (Continued)

1. Liquid Krypton EM Calorimeter Support

Specific Concerns:

- *Differences in the axial thermal coefficients of expansion of the accordion plates (stainless/lead) and the cryostats (aluminum) require mechanical compensation.*

Answer:

- *Since effective axial coefficient of expansion of the accordion plate is almost identical to that of the cryostats (see Data) no mechanical compensation is required.*

Specific Concerns:

- *The radial (across the folds) thermal contraction of the accordion plates is known to be greater than the simple contraction of the material, thus increasing the difficulty of providing support at the inner and outer edges of the accordion plates.*

Answer:

- *Since the radial thermal contraction of the accordion plates is 27% more than that of the cryostats, it will require radial support and we have included radial support in our design.*

Data:

- An analysis was performed to determine the effective axial thermal coefficient of expansion of the absorber accordion plate for thermal cooldown from 296°K to 77°K. For the baseline lay-up (0.4mm stainless, 0.2mm G10 and 1.3 mm lead) the effective per cent change in length (%ΔL/L) in the axial direction is 0.35% as compared with that of aluminum of 0.37%. Therefore, the accordion plates should contract like the aluminum cryostat in the axial direction during thermal cooldown.

- Analysis has shown that the baseline accordion plate radial thermal contraction due to thermal cooldown to 77°K is 40% greater than the simple contraction of the material, based on plane stress assumptions. This is due to the difference in the length of the steel layer on the outside relative to the inside(reference Figure 1-8, 1-8a). For the baseline lay-up (0.4mm stainless, 0.2mm G10 and 1.3 mm lead) the effective per cent change in length (%ΔL/L) in the radial direction is 0.47%. Since this is much greater than that of aluminum, the accordion plates will be subject to tension if they are attached radially to the cryostat.

Figure 1-8. Baseline Absorber Accordion Radial Thermal Contraction

The picture on the right side of Figure 8-1 represents the contraction in the y direction considering the aggregate thermal coefficients of expansion for stainless steel, G10. and lead at one overall length (simple material contraction). The picture on the left side of Figure 8-1 represents the contraction in the y direction while considering each individual material (stainless steel, G10 and lead) at its own individual length. This contracts 40% more than the simple material contraction configuration.

Figure 1-8a. Baseline Absorber Accordion Segment Radial Thermal Contraction

To further understand the difference in thermal contraction, Figure 8-1a shows how an isolated segment of the absorber accordion not only contracts due to the effect of cryogenic temperatures on the length of material but also due to the rotation caused by the different lengths of the layered materials.

Notes: The plates will not be attached axially to the cryostat.
The thermal stresses due to radial support are currently under investigation.

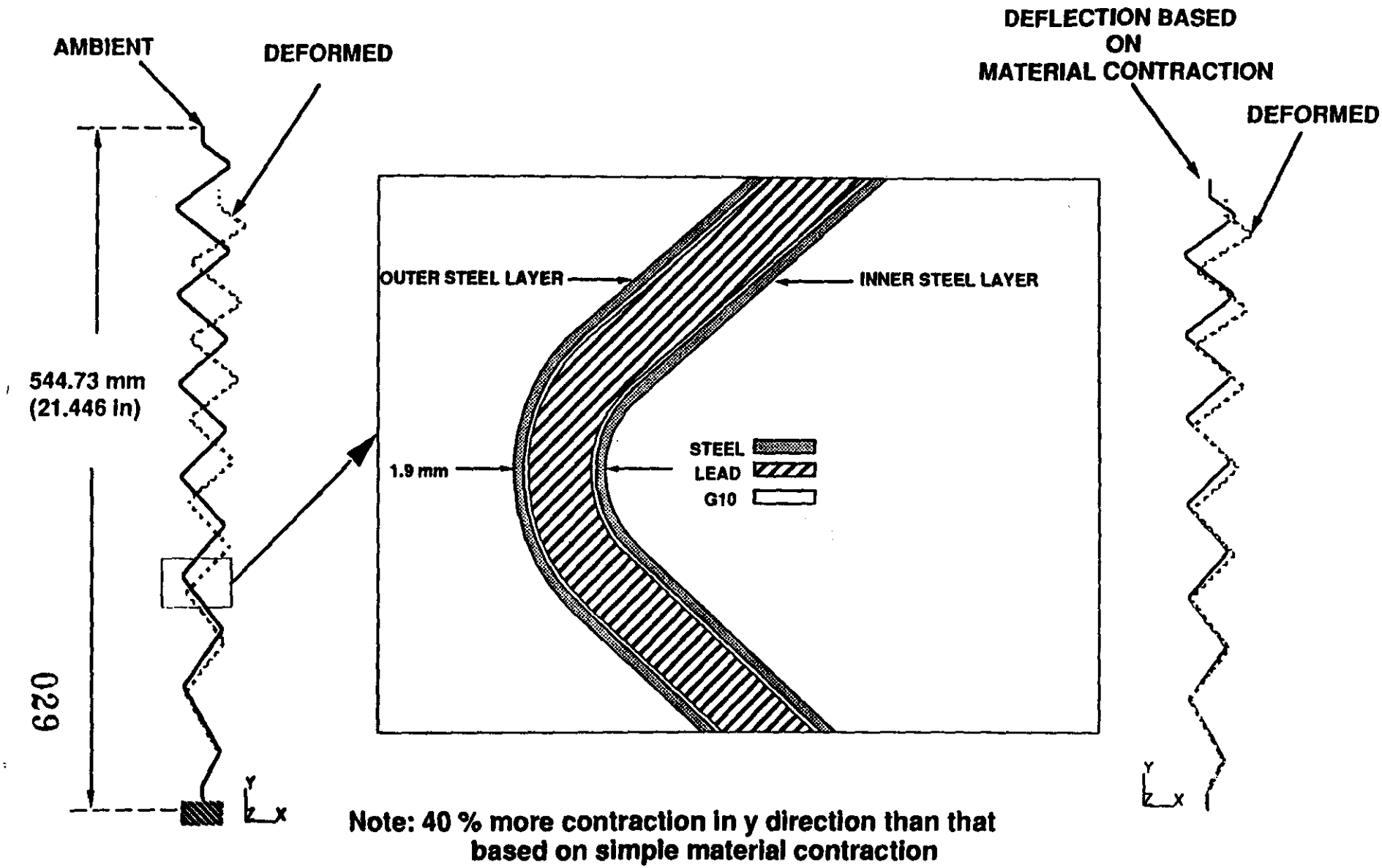

Figure 1-8 Baseline Absorber Accordion Thermal Contraction

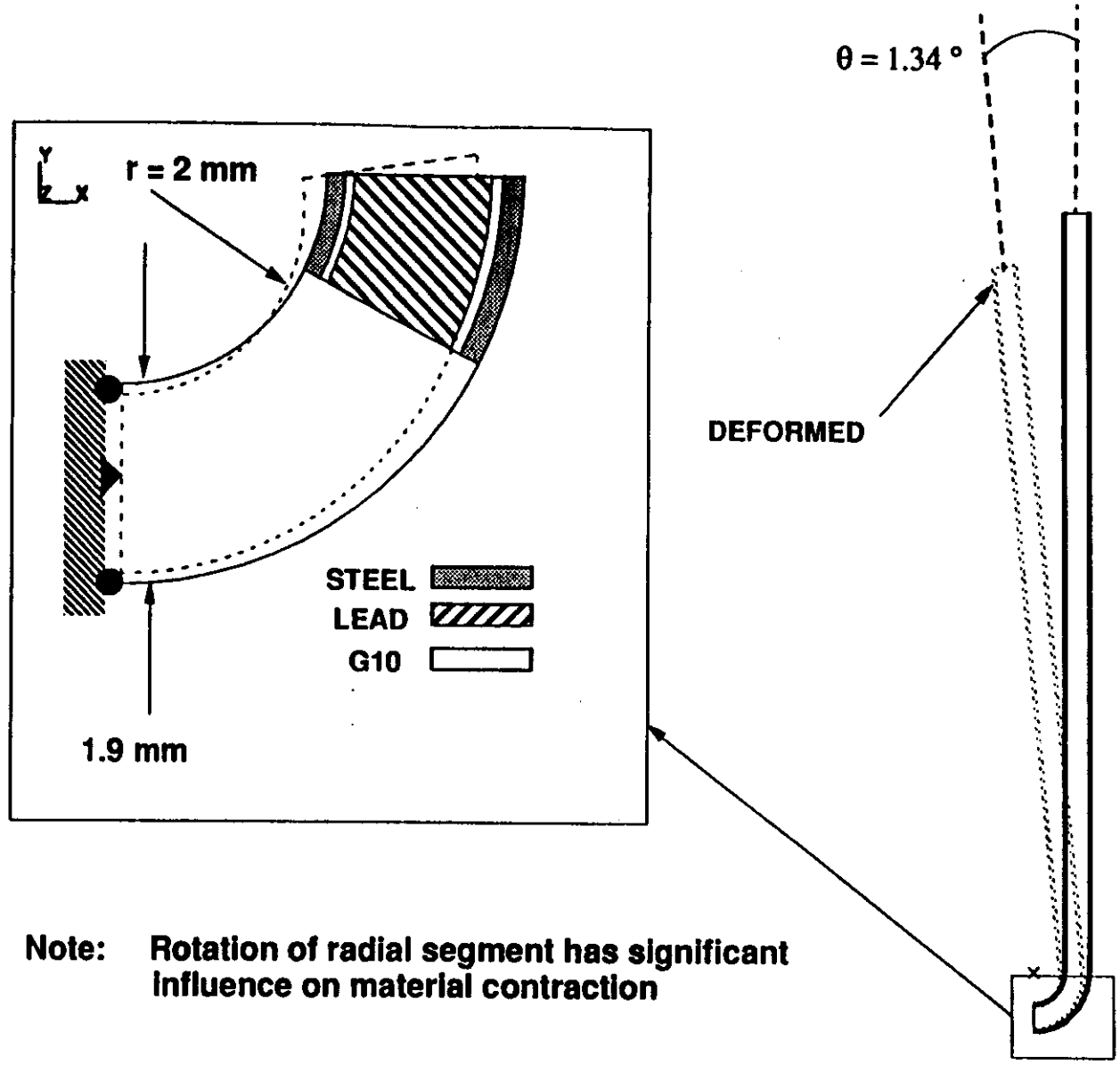

Note: Rotation of radial segment has significant influence on material contraction

Figure 1-8a Baseline Absorber Accordion Segment Thermal Contraction

Calorimeter Engineering Question (Continued)

1. ***Liquid Krypton EM Calorimeter Support***

Specific Concerns:

- *Deflection of the barrel accordion plates after assembly is not understood. The plates are basically large springs which allow the inner diameter of the barrel to sag due to the mass of the assembly. In particular, the vertically oriented plates on top and bottom appear to support all the load.*

Answer:

- *In our design, the vertically oriented plates on the top and bottom do not support a significant amount of the load. To better understand the deflections, we performed analysis on several support conditions and then chose the optimum support condition (reference Figures 1-13 through 1- 16).*

Data:

- The maximum accordion plate deflection occurs in the horizontal position.
- The baseline is assumed to be the absorber accordion plate lay-up 1 (reference Figure 1-9).
- Support case 8 was chosen because it results in less dead space and for a 1g load the maximum horizontal deflection of the absorber accordion plate is 0.973 mm in krypton (reference Figure 1-14).
- The maximum deflections and strains of the absorber plate in air and krypton are presented for several lay-ups (reference Figure 1-14).
- Interaction equations are developed to provide the capability of changing the absorber plate lay-up and determining the maximum horizontal deflections (reference Figure 1-15).

Figure 1-9. Accordion Lay-Up

Figure 1-9 shows the five plate lay-up configurations considered in alalyzing the EM accordion plate deflections.

Figure 1-10. Accordion Properties

Figure 1-10 lists the properties of each of the accordion EM components.

Figure 1-11. Accordion Geometry

Figure 1-11 shows the accordion EM dimensions.

Figure 1-12. Support Cases 1 - 8

Figure 1-12 describes the eight support cases considered for the barrel accordion EM plates.

Figure 1-13. Absorber/Sensor Accordion Analysis Results in Air for Support Cases 1-8

Figure 1-13 lists the deflections in the absorber and sensor plates that occur in each of the eight support cases.

Figure 1-14. Absorber Accordion Analysis Results(Air & Krypton) for Several Lay-Ups (Support Case 8)

Figure 1-14 shows the nominal deflections and strain as well as the deflections and strain in liquid krypton for various plate lay-ups under support case 8 constraints.

Figure 1-15. Absorber Accordion Deflection Lay-Up Interaction Equations (Support Case 8)

Figure 1-15 shows the equations derived due to the finite element analysis performed. A comparison of weight to stiffness ratios and deflections in air and krypton is also tabulated.

Figure 1-16. Accordion Equations for Stiffness & Weight

Figure 1-16 refers to additional equations used for weight and stiffness calculations.

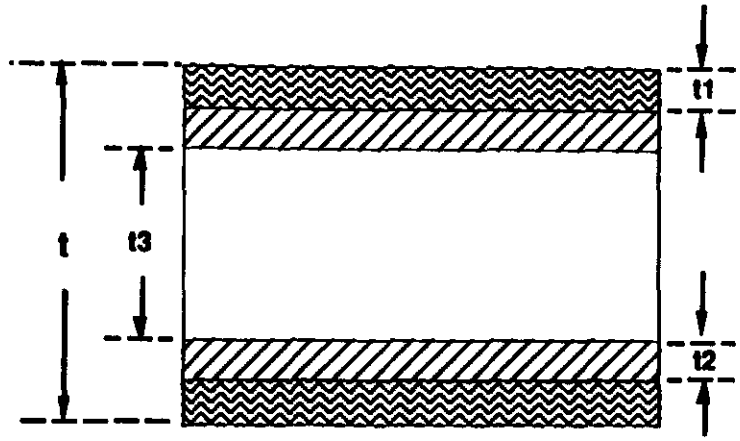

ABSORBER PLATE LAMINA

- STEEL (t1)
- G10 (t2)
- LEAD (t3)

SENSOR PLATE LAMINA

- COPPER (0.042 mm)
- KAPTON (0.218 mm)
- COPPER (0.036 mm)

PLATE LAY-UP	t1 (mm)	t2 (mm)	t3 (mm)	t (mm)
1	0.20	0.10	1.30	1.9
2	0.20	0.20	0.90	1.7
3	0.20	0.10	0.90	1.5
4	0.15	0.23	0.94	1.7
5	0.20	0.30	0.90	1.9

Figure 1-9 Accordion Lay-up

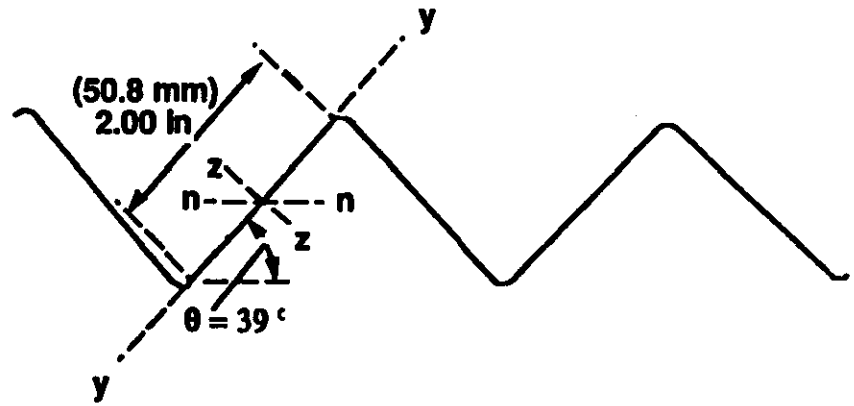

Material	(ρ) Density (g/cm^3)	(E) Modulus (10^6 lbs/in^2)	(ν) Poisson's Ratio	%ΔL/L (296 to 77 °K)
Steel	8.00	30.0	0.272	0.281
G10	1.70	4.40	0.187	0.638/0.212*
Lead	11.3	2.60	0.400	0.577
Copper	9.10	17.0	0.345	0.304
Kapton	1.42	0.51	0.340	0.330

* resin/fiber directions

PLATE LAY-UP	(W_A) Wt. in air (kg)	(W_K) Wt. in krypton (kg)	(EI_n) Stiffness (10^6 lbs-in^2)	(EI_y) Stiffness (10^3 lbs-in^2)	(EI_z) Stiffness (10^6 lbs-in^2)
1	27.00	20.20	0.17	1.17	0.4266
2	20.80	14.73	0.168	0.913	0.422
3	20.30	14.94	0.159	0.67	0.400
4	20.44	14.36	0.140	0.7695	0.3535
5	21.31	14.52	0.177	1.20	0.4455

(Note that mixed units are used to provide ease of use by Physicists and Engineers)

Figure 1-10 Accordion Properties

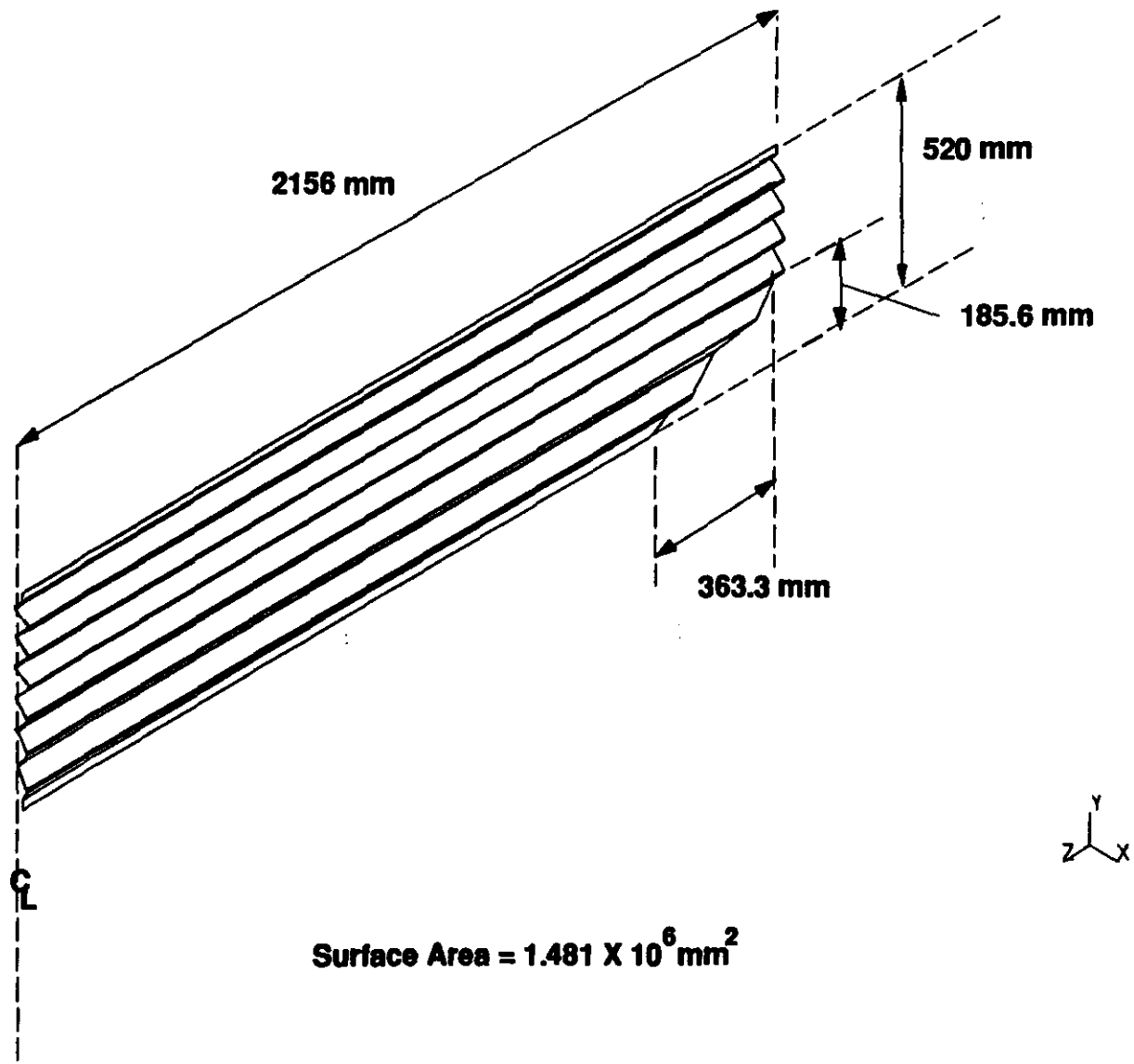

Figure 1-11 Accordion Geometry

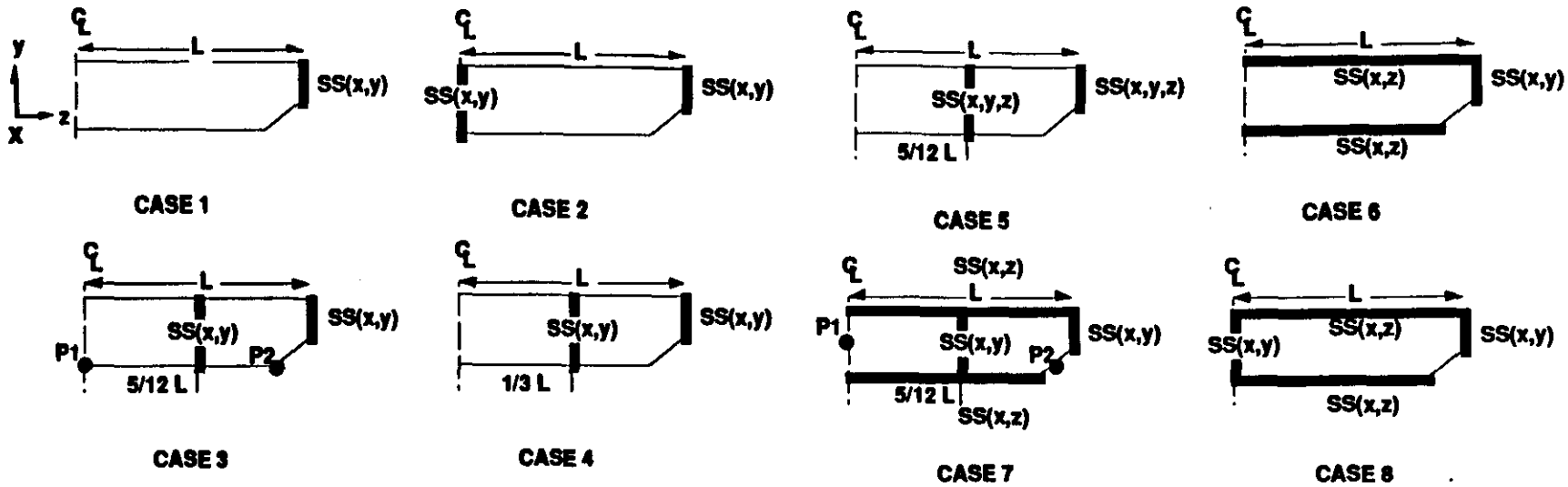

SS(x,y)	=	pinned supports in x & y directions
SS(x,z)	=	pinned supports in x & z directions
SS(x,y,z)	=	pinned supports in x, y &z directions
P1, P2	=	locations for deflection measurements
L	=	half the length of the absorber plate

Figure 1-12 Support Cases 1-8

Absorber Analysis Results in Air

Support Case	δ_x Max Deflection x direction (mm)	δ_x Deflection at P2 x direction (mm)	ε_z % Max Strain z direction (10^{-2})
1	80.5		6.65
2	3.08		2.00
3	0.96	0.64	0.89
4	1.108		0.78
5	0.67		
6	4.9		0.75
7	0.47	0.11	0.61
8	1.3		1.24

Sensor Analysis Results in Air

Support Case	δ_x Deflection at P1 x direction (mm)	δ_x Deflection at P2 x direction (mm)	ε_z % Max Strain z direction (10^{-2})
3	2.2	0.52	0.80
7	0.35	0.33	0.43

Absorber/Sensor Relative Maximum Deflections (mm) in Air

CASE	δ_x x direction	δ_n normal to flat of plates
7	0.22	0.185

Figure 1-13 Absorber/Sensor Accordion Analysis Results in Air for Support Cases 1-8

PLATE LAY-UP	δ_x Max Deflection in Air x direction (mm)	δ_x Max Deflection in Krypton x direction (mm)	ε_z Max Strain in Air z direction (10^{-4}mm/mm)	ε_z % Max Strain in Krypton z direction (10^{-2})
1	1.30	0.973	1.24	0.928
2	1.08	0.764	1.01	0.714
3	1.17	0.861	0.999	0.735
4	1.26	0.885	1.18	0.829
5	0.99	0.674	0.944	0.643

notes:

density of krypton = 2.415 g/cm^3
deflection in krypton = deflection in air*(W_K/W_A)
stress for each layer can be computed by multiplying the strain, ε_z , by the Modulus, E

Figure 1-14 Absorber Accordion Analysis Results(Air & Krypton) for Several Lay-Ups (Support Case 8)

(Valid Only for This Geometry and Case 8 Support Conditions)

In air: $\alpha R_1 + \beta R_2 = \delta_x$

In krypton: $\alpha R_1 + \beta R_2 = \delta_x * (W_K/W_A)$

where

α = 6208.3351

β = 13.734216

δ_x = max vertical deflection (mm)

$R_1 = W_A/EI_n$ (kg/lbs-in^2) - weight to stiffness ratio for the "n" axis (reference Figure 1-10)

$R_2 = W_A/EI_y$ (kg/lbs-in^2) - weight to stiffness ratio for the "y" axis (reference Figure 1-10)

PLATE LAY-UP	R_1 (kg/lbs-in^2))	R_2 (kg/lbs-in^2))	δ_x Max Deflection in Air x direction (mm)	δ_x Max Deflection in Krypton x direction (mm)
1	0.0001591	0.023000	1.30	0.973
2	0.0001239	0.022774	1.08	0.764
3	0.0001280	0.030311	1.17	0.861
4	0.0001455	0.026571	1.26	0.885
5	0.0001203	0.017749	0.99	0.674

(Note that mixed units are used to provide ease of use by Physicists and Engineers)

Figure 1-15 Absorber Accordion Deflection Lay-Up Interaction Equations (Support Case 8)

Stiffness Equations:

$$EI_z = \frac{1}{12} w^3 \left[2 E_1 t_1 + 2 E_2 t_2 + E_3 t_3\right]$$

$$EI_y = 2 w \left[\frac{1}{12} E_1 t_1^3 + E_1 t_1 \left(\frac{t}{2} - \frac{t_1}{2}\right)^2\right] + 2 w \left[\frac{1}{12} E_2 t_2^3 + E_2 t_2 \left(\frac{t}{2} - t_1 - \frac{t_2}{2}\right)^2\right] + \frac{1}{12} w E_3 t_3^3$$

$$EI_n = \frac{1}{2}\left(EI_y + EI_z\right) + \frac{1}{2}\left(EI_y - EI_z\right)\cos(2\theta)$$

where

I_z, I_y, I_n = area moment of inertia about the z, y & n axes, respectively (Ref. Figure 1-10)

E = effective modulus of elasticity of accordion plate

Accordion Weight Equations in Air & Krypton:

$$W_A = S\,(2\rho_1 t_1 + 2\rho_2 t_2 + \rho_3 t_3)$$

$$W_K = S\,[(2\rho_1 t_1 + 2\rho_2 t_2 + \rho_3 t_3) - \rho_k t]$$

where

W_A, W_K = weight of half the absorber accordion plate in air & krypton, respectively

ρ_1, ρ_2, ρ_3 = density of steel, G10 & lead, respectively

ρ_k = density of krypton

t_1, t_2, t_3 = thickness of steel, G10 & lead layers, respectively

t = total thickness of absorber accordion plate

S = surface area of half the absorber accordion plate

Figure 1-16 Accordion Equations for Stiffness & Weight

Calorimeter Engineering Question

1. Liquid Krypton EM Calorimeter Support

Request: *Provide a proof-of-principle structural designs for the barrel and endcap accordion EM calorimeters.*

Specific Concerns:

- *The load path from the endcap accordion plates to the endcap cryostat barrel is not understood.*

Answer:

- *The load path (reference Figure 1-19) is from the plates through fasteners that hold the plates together, through stiffeners, through the face plates, through the aluminum shell and into a flange on the Endcap Calorimeter stay (not shown).*

Data:

The Endcap accordion EM is constructed of 330 sensor and 331 absorber plates grouped into 110 physical "towers" (reference Figure 1-17). The first and last bend of each plate project to interaction point (reference Figure 1-18). G10 spacers are placed between the plates to provide the proper spacing of the plates. The plates are held together with fasteners. Hexcel strips are placed between the flat faces of the accordion region to provide a minimum high voltage gap between the sensor plate and the absorber plate. At appropriate locations the accordion is shifted one cycle to compensate for the curvature of the accordion structure. Each of these shifts contains a G10 stiffener as the structural element that supports the weight of many plates and provides a stiff support to control the effects of thermal shrinkage. The stiffeners are attached to a perforated G10 face plate. Two halves of a conical aluminum shell are joined and the face plates and stiffeners are attached to flanges on the outer edges of the aluminum shell (reference Figures 1-19, 1-20, 1-21). The flange on the rear outer edge of the aluminum shell is also used to attach the EM assembly to Endcap Calorimeter stay.

Figure 1-17 Endcap Accordion EM Without Support System
Endcap EM showing only the physical towers. Each Physical tower consists of 3 absorber plates, 3 sensing plates and 6 Argon gaps

Figure 1-18 Endcap Accordion EM
Plan view of the Endcap Accordion showing the support system. Individual absorber and sensor plates are shown only in the detailed view.

Figure 1-19 Endcap EM Support System
Exploded view showing the support system of the Endcap EM. Composite Stiffeners attach the accordion plates to composite Faceplates. The Faceplates and Stiffeners are attached to the two halves of the aluminum shell

Figure 1-20 Endcap EM Assembly
Exploded view showing the support system of the Endcap EM and physical towers.

Figure 1-21 Asembled Endcap EM

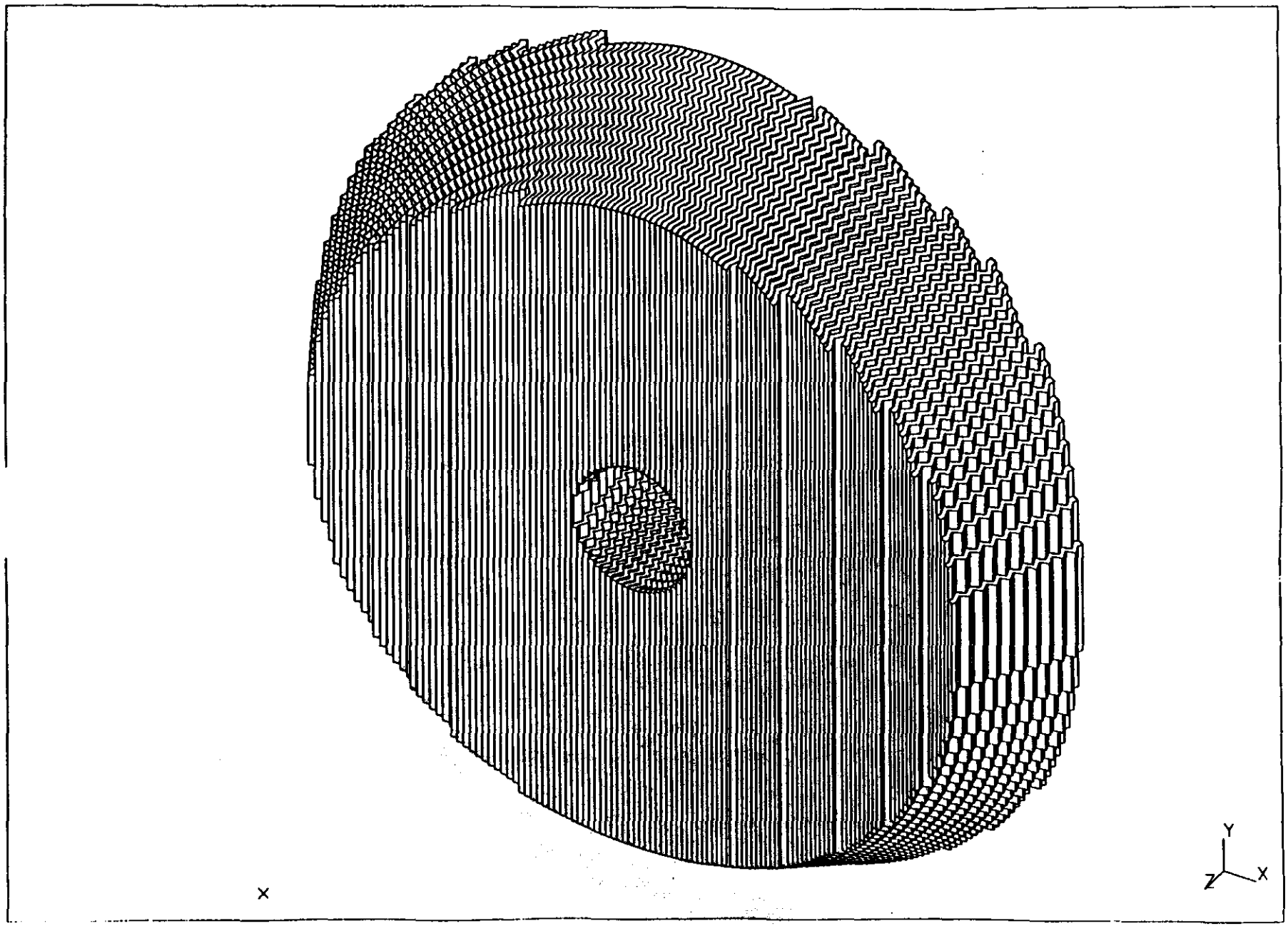

Figure 1-17 Endcap Accordion EM Without Support System

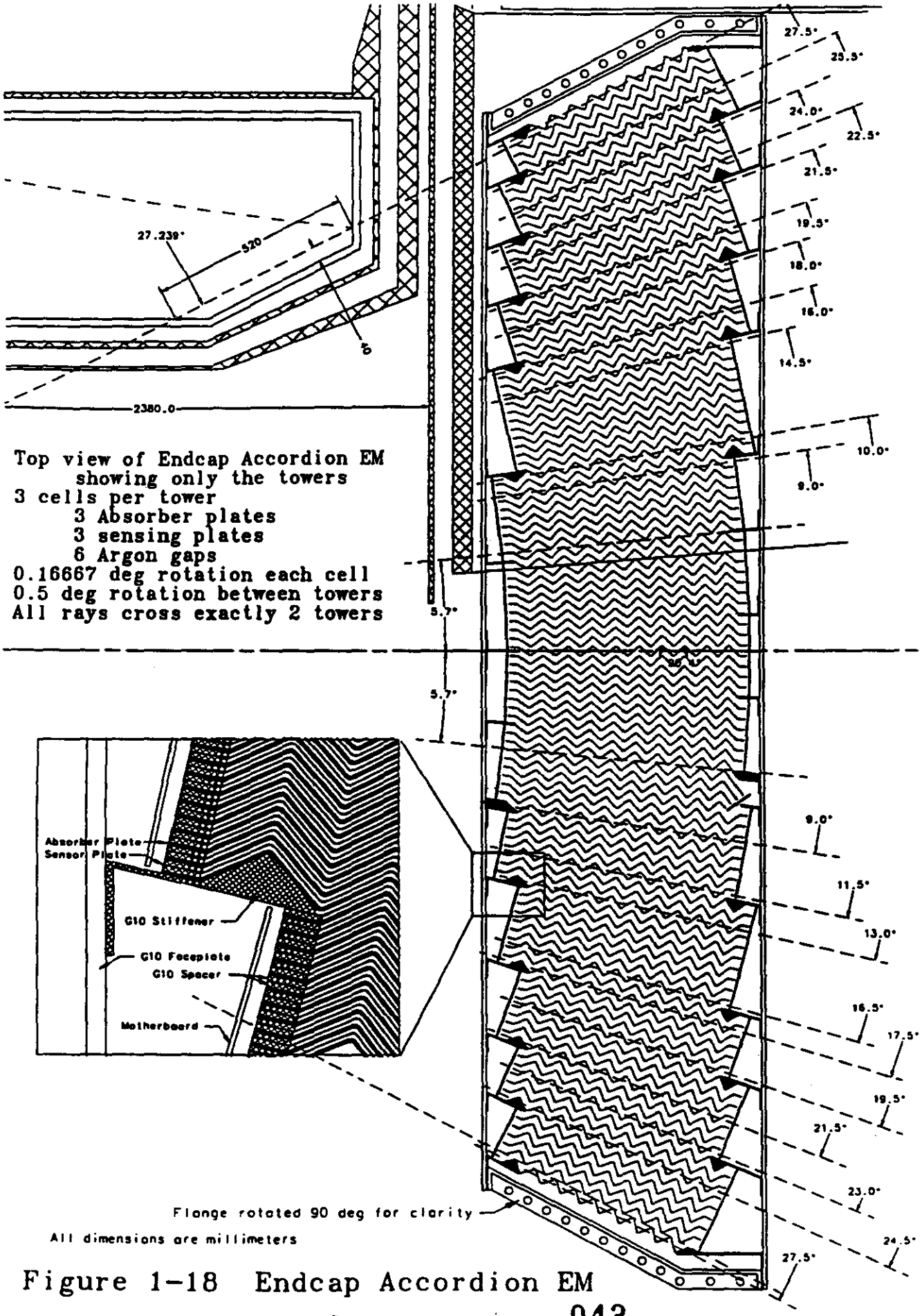

Figure 1-18 Endcap Accordion EM

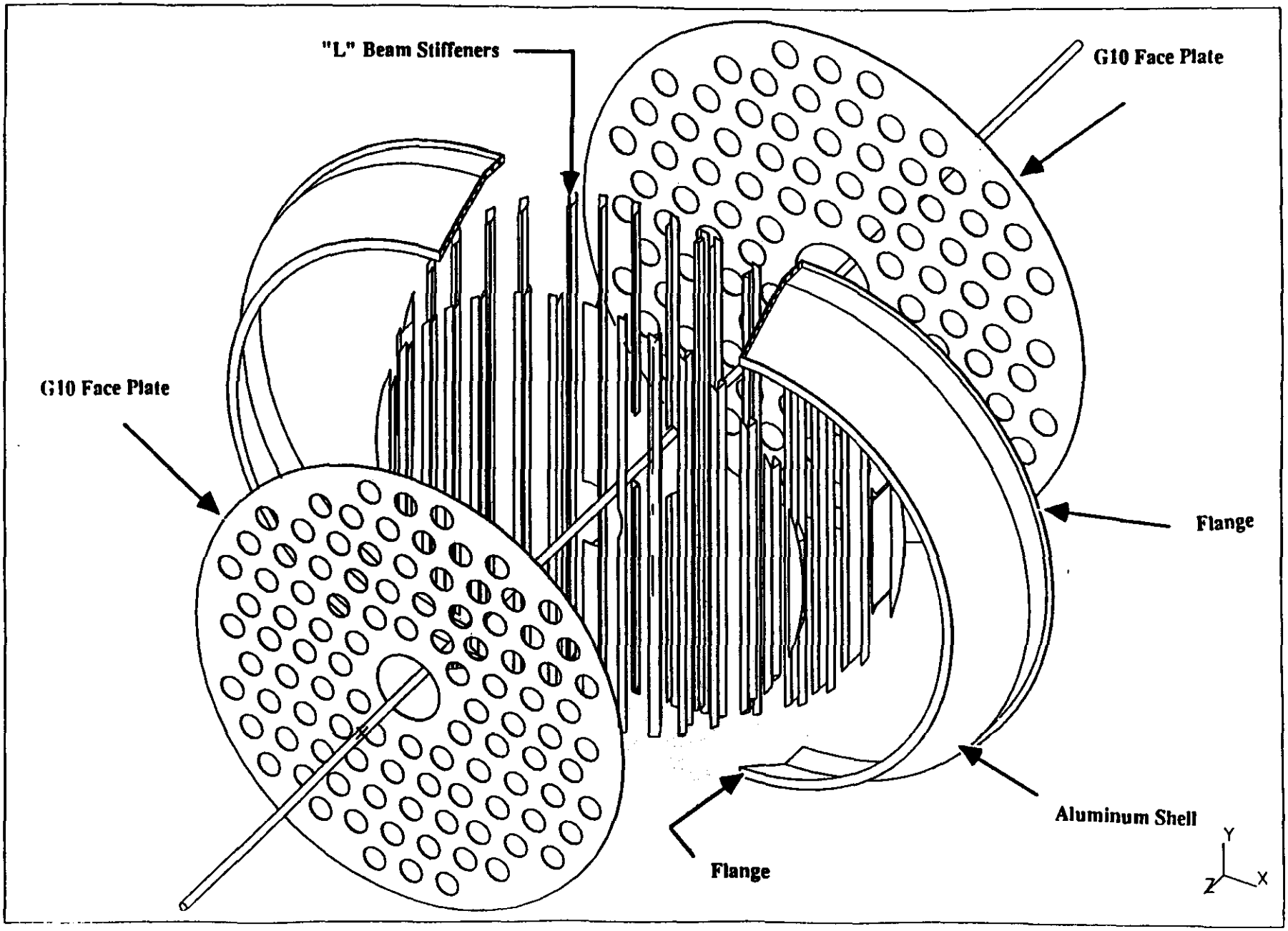

Figure 1-19 Endcap EM Support System

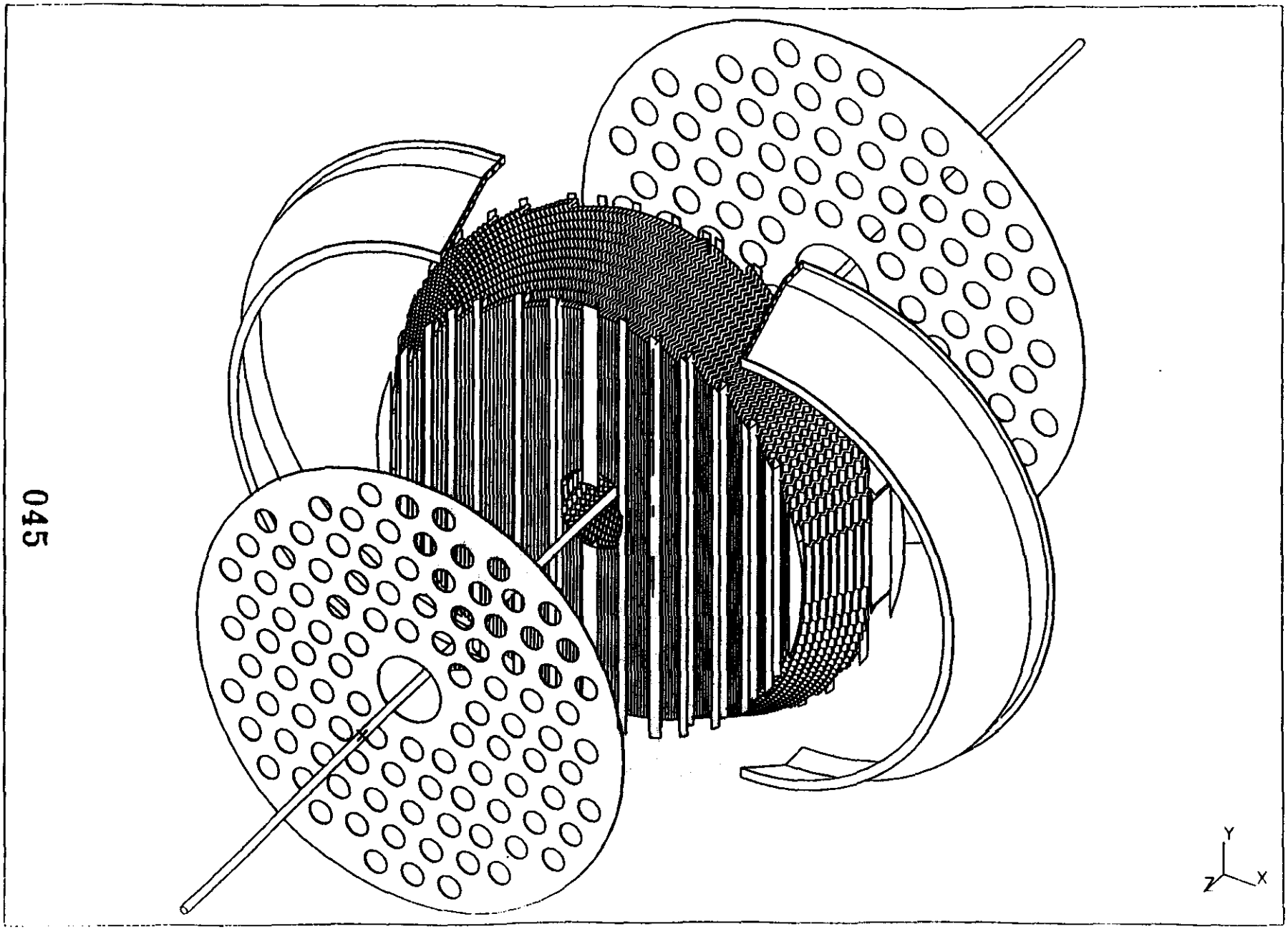

Figure 1-20 Endcap EM Assembly

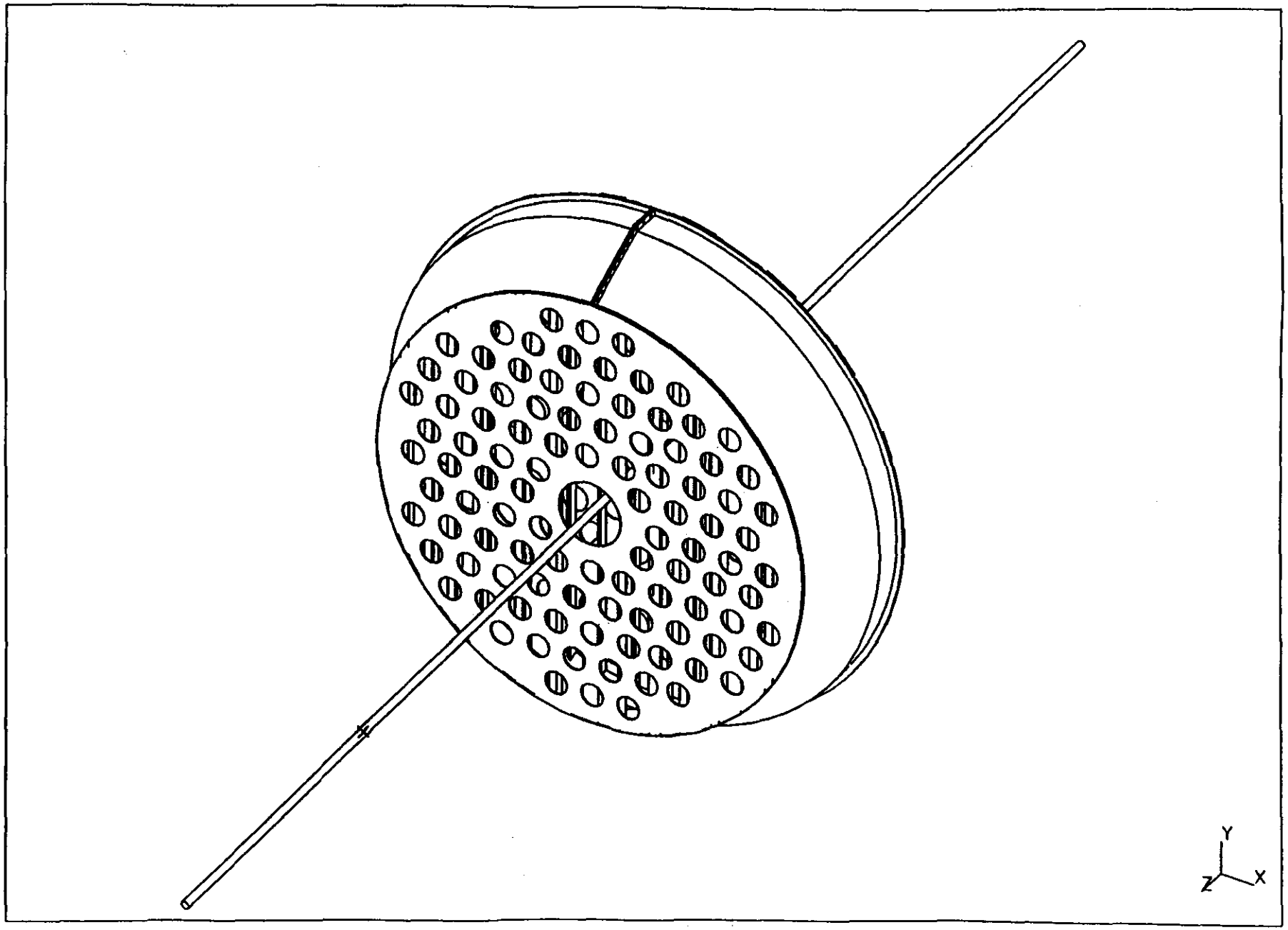

Figure 1-21 Assembled Endcap EM

Calorimeter Engineering Question

2. ***Integrated Liquid Argon Calorimeter Diameter***

Request: Provide a more detailed tabulation of the diametrical stack-up of the integrated liquid argon calorimeter.

Specific Concern:
- *The stack-up should specify fabrication and assembly tolerances.*

Answer:
- *A preliminary tolerance study indicates that standard manufacturing tolerances are acceptable for both manufactured parts and procured hardware. See Figures 2-2 through 2-6.*

Specific Concern:
- *An end section at eta=0 is needed for a complete understanding of the clearances and layout of the vessel and modules.*

Answer:
- *Figure 2-1 and 1a shows the ambient and cryogenic nominal diametrical dimensions for the barrel calorimeter and the minimum hadronic module spaces for both temperatures. Also a summary of the hadronic module maximum diametrical dimensions at ambient and cryogenic temperatures are listed. The EM barrel modules will be shimmed to fit the vessel at the outer radius clevises. The outer radius of the module will have thermal expansion rates equal to the aluminum vessel while the inner radius will follow the radial thermal expansion rates of the accordion absorber plates.*

Data:

The actual design of the modules has not been completed in this conceptual phase but a study was performed based on the cell stacks and vessel configurations. Plate tolerances for the 9 and 15mm copper were ± 0.007 and 0.008 inches respectively. Tooling for the absorber/sensor sandwiches are to hold a tolerance of ± 0.004 inches. The spacer button tolerance was ± 0.0015 inches.
The vessel radial tolerances of the shells is controlled by neutral axis hoop length, with a tolerance as specified in the table, and weld shrinkage also specified in the table. Weld shrinkage can be evaluated and compensated for in the actual design, but was not done so here.

Figure 2-1 Vessel Dimensions Ambient and Cold

Figures 2-1 and 2-1a show the nominal dimensions at ambient (300°K) and cryogenic (86°K) temperatures for the EM and Hadronic modules within the liquid argon vessel. These envelopes include considerations for manufacturing and material stock tolerances as well as considerations for the thermal effects relative to the coefficient of thermal expansion for the aluminum cryostat.

Figure 2-1a EM Vessel and EM Module Dimensions

Figure 2-2 First Fine Hadronic Module Stack Height and Element Tolerances.

Figures 2-2, 2-3 and 2-4 show the nominal and maximum stackup height for the fine and coarse hadronic modules along with the tolerances used for individual plates contained within the modules.

Figure 2-3. First Fine Hadronic Module Stack Height and Element Tolerances.

Figure 2-4. Coarse Hadronic Module Stack Height and Element Tolerances.

Figure 2-5. Radial Dimension - Thermal Effects on Hadronic Modules

Figure 2-5 shows the maximum ambient and cold height of the fine and coarse hadronic modules. A comparison of these values to Figure 2-1 verifies that the modules will always have clearance within the allowable radial space between the stays and vessel walls.

Figure 2-6. Work sheet for the vessel and module elements

Figure 2-6 is the worksheet used to develop the module and module envelope tolerance stackups..

Figure 2-7. EM Module Diametrical Stack-up

Figure 2-7 shows the calculation used to develop the % $\Delta L/L$ for G10 in order to minimize the change in radius due to thermal effects.

TYPICAL ARGON VESSEL TOLERANCE STACKUP

Vessels are 5083 Aluminum

All Dimensions in mm

Module Max Radial Dimensions at Ambeint and Cold

598max	EM Module Ambient
595.3max	EM Module Cold
624.7max	1st Fine Hadron Module Ambient
622.5max	1st Fine Hadron Module Cold
628.4max	2nd Fine Hadron Module Ambient
626.2max	2nd Fine Hadron Module Cold
654.1max	Coarse Hadron Module Ambient
651.8max	Coarse Hadron Module Cold

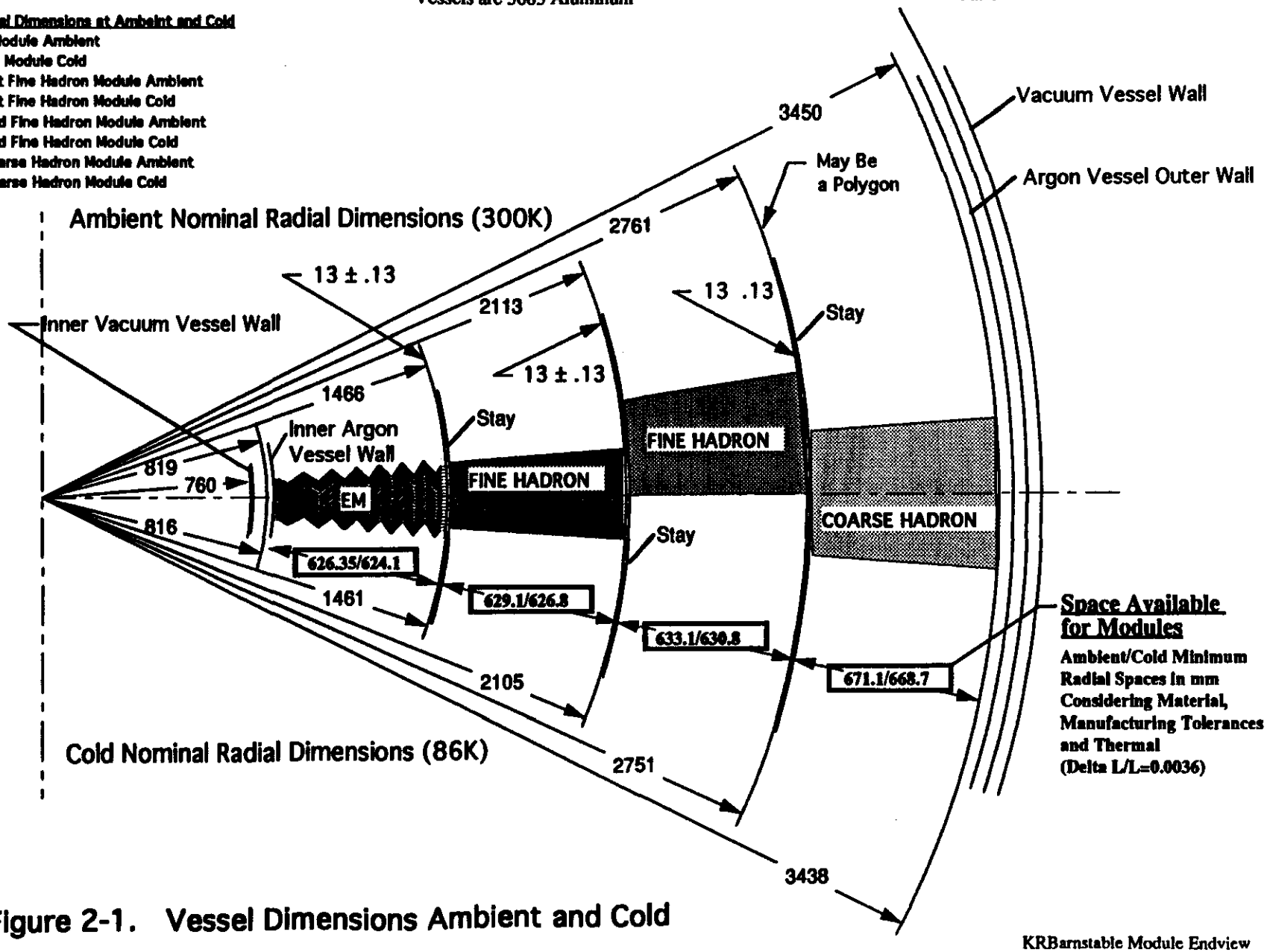

Figure 2-1. Vessel Dimensions Ambient and Cold

KRBarnstable Module Endview

TYPICAL ARGON VESSEL TOLERANCE STACKUP

Vessels are 5083 Aluminum

All Dimensions in mm

Module Max Radial Dimensions at Ambeint and Cold

598max	EM Module Ambient
595.3max	EM Module Cold
624.7max	1st Fine Hadron Module Ambient
622.5max	1st Fine Hadron Module Cold
628.4max	2nd Fine Hadron Module Ambient
626.2max	2nd Fine Hadron Module Cold
654.1max	Coarse Hadron Module Ambient
651.8max	Coarse Hadron Module Cold

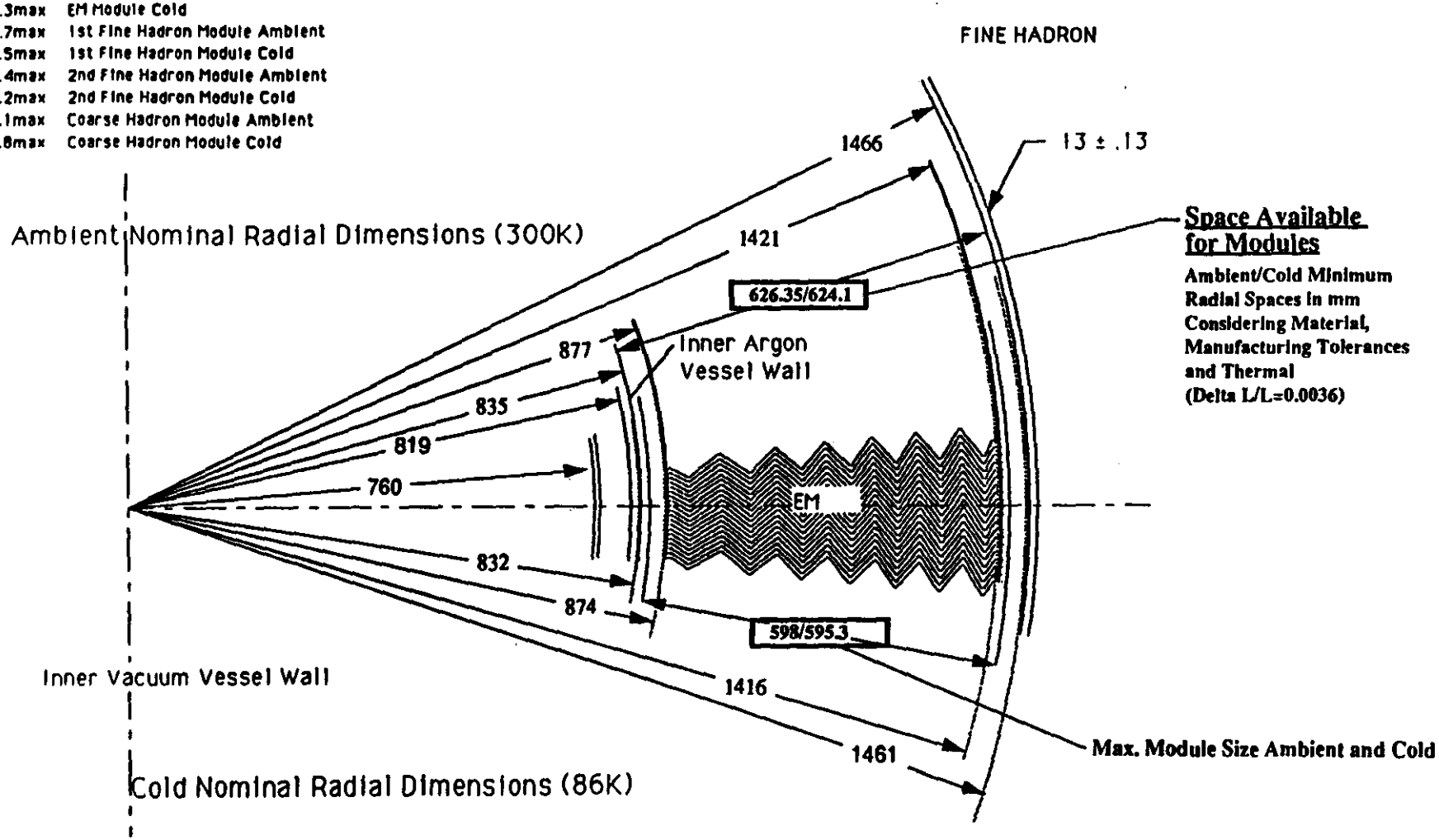

Figure 2-1a. EM Vessel and EM Module Dimensions - Ambient and Cold

EM Mod. E/V Fig. 2-1a

MODULE TOLERANCE STACKUP

All Dimensions in mm

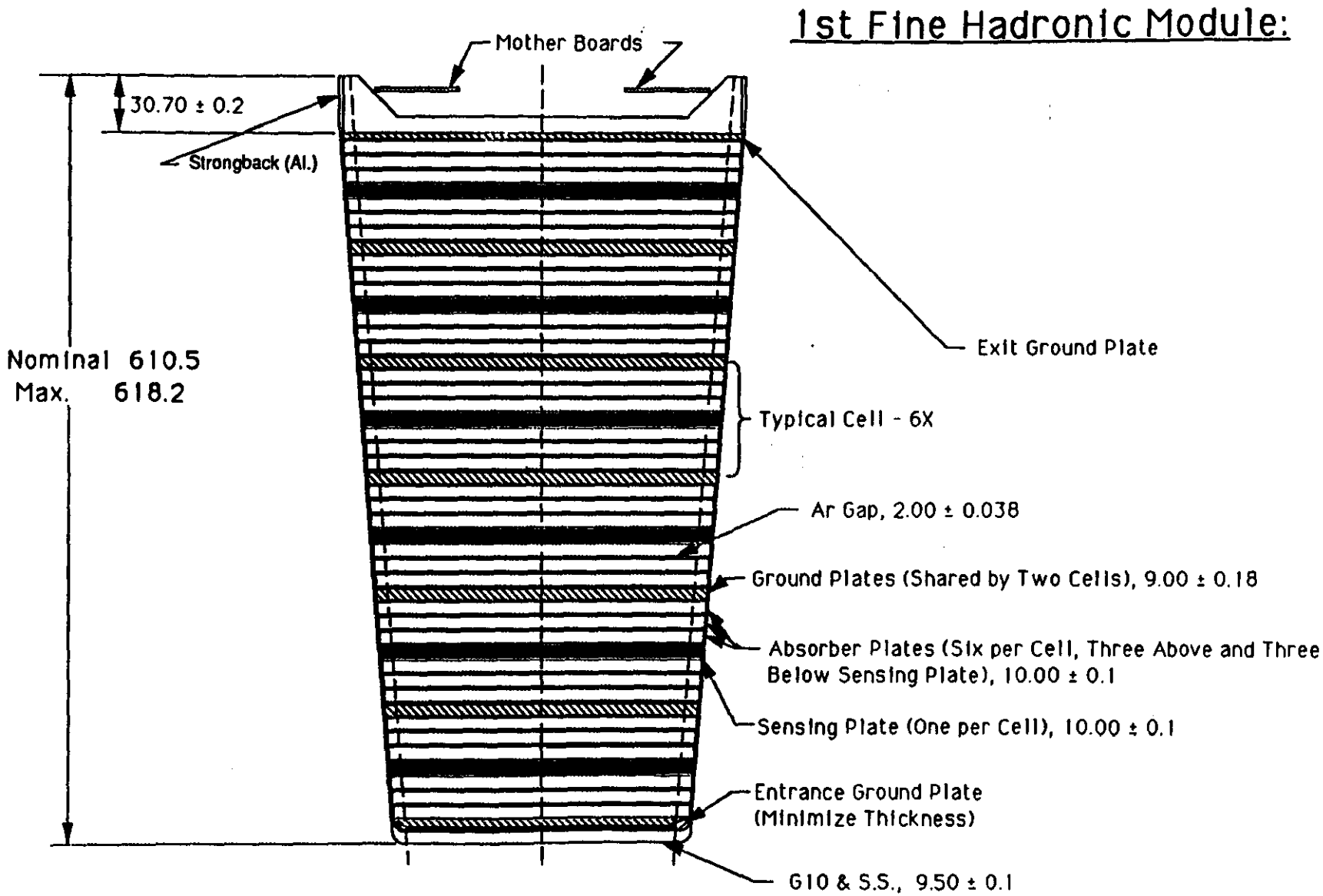

Figure 2-2. First Fine Hadron Module Showing Stack Height and Element Tolerances

KRBarnstable Module Tol F.H.*Fig2-2

MODULE TOLERANCE STACKUP

All Dimensions in mm

2nd Fine Hadronic Module:

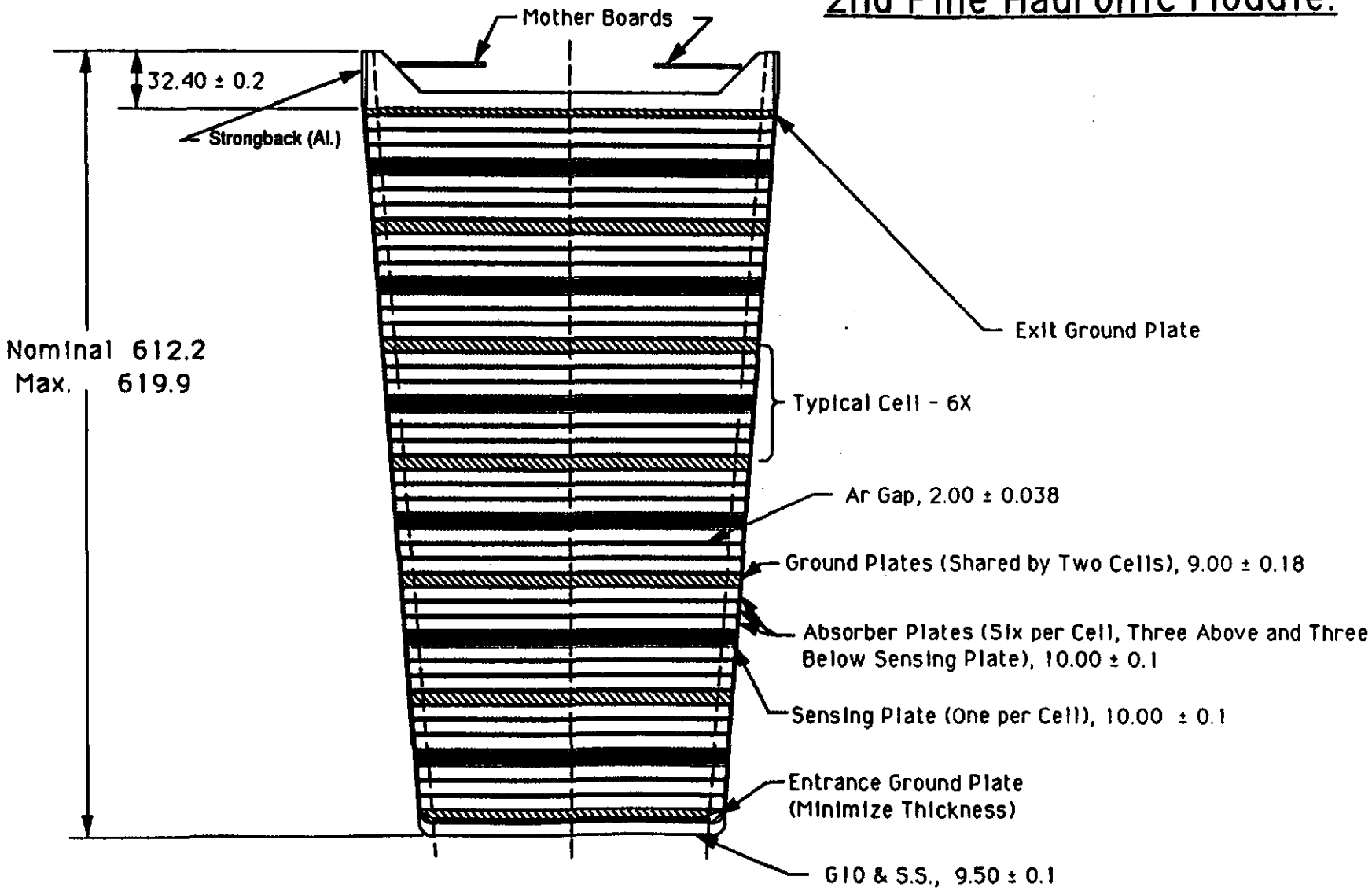

Figure 2-3. Second Fine Hadron Module Showing Stack Height and Element Tolerances

KRBarnstable Module Tol F.H.*Fig2-3

MODULE TOLERANCE STACKUP

All Dimensions in mm

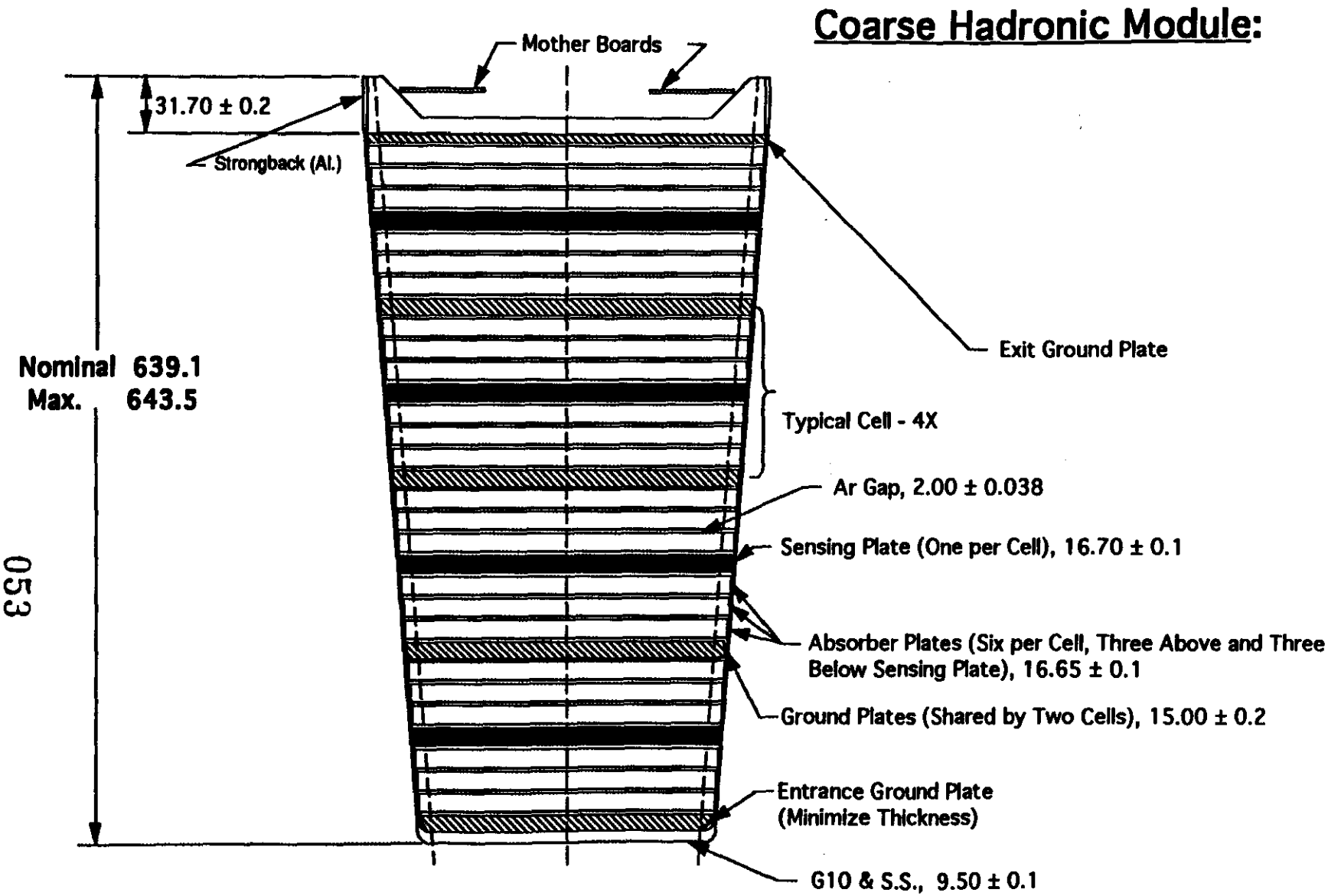

Figure 2-4. Coarse Hadron Module Showing Stack Height and Element Tolerances

KRBarnstable Module Tol C.H.#Fig2-4

LIQUID ARGON CALORIMETER - HADRONIC MODULES

Radial dimension for confirming compatiability with the vessel are shown.
Maximum stack heights were used to compare with minimal vessel radii in Figure 2-1.
Ambient is 300K, Cold is 86K.

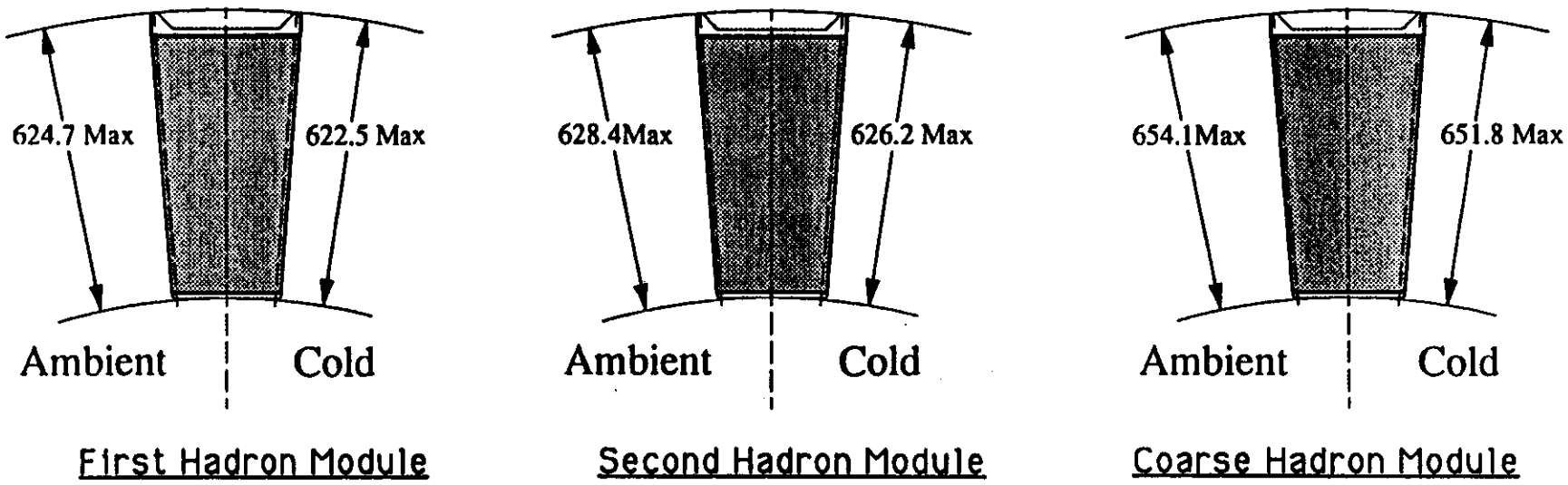

Figure 2-5. Radial Dimension - Thermal effects on Hadron Modules

All dimensions are in mm

KRBarnstable FHad#1ΔT Tol Fig 2-5

Barrel cal. Ambient Data	Qty Info	Depth, mm	Circular Sta radius, mm	Min Tol. thk mm	Max Tol. thk mm	Min Tol. radius mm	Max Tol. radius mm	Comments	Smallest Vessel Space mm	Largest Cmpnt Radi mm	Nmi Amb Mod. Stck Hght mm	Max Amb Mod. Stck Hght mm	Nmi Amb Mod. Stck Radi mm	Nmni Amb Radi Vesl Circc Betwn Stays
Cryostat Vessels														
Vacuum wall IR		9	780.0			2.5	2.5	Cut to 2mm, weld to 2mm two pics						
Vacuum wall OR			789.0	0.2	0.2									
Vacuum Space		50							44.80					
Argon Wall IR		16	819.0			2.5	2.5	Cut to 2mm, weld to 2mm two pics						
Argon Wall			835.0	0.2	0.2									
EM Module	Gap	10	845.0					IR Floats						
Strip Line		5	850.0	0.07	0.07			Inside of support						
Argon Gap		17.5	867.5											
G10 Board		2.5	870.0											
Argon		6.5	876.5											
Front Spacer G10		13.5	890.0			1.9	1.9	40 arcs to+-(.006)=(.24)arc						
Absorber		522							628.35	615.44	611.50		611.50	631.60
Aft Spacer G10		13.5	1425.5			1.9	1.9	40 arcs to+-(.006)=(.24)arc						
Argon Gap		6.5	1432.0											
G10 Board		2.5	1434.5											
Argon Gap		17.5	1452.0	0.07	0.07			Outside of support						
Strip line		4.5	1456.5											
	Gap	10.1	1466.6											
Stay IR		13	1466.6			2.55	2.55	Cut to 2mm, weld to 2mm two pics						
Stay OR			1479.6	0.13	0.13									
1ST Hadron Module	Gap	13	1492.6											
G 10 Interance		5.5	1498.1											
Steel Plate		4	1502.1	0.1	0.1									
Copper plates	7	9		0.18	0.18	1.26	1.26	Two of 7 are half thickness						
Absorber Plates	36	10		0.1	0.1	3.6	3.6							
Sensing Plates	6	10.05		0.1	0.1	0.6	0.6		629.07		610.50	618.18	617.00	633.00
Spacers	48	2		0.038	0.038	1.824	1.824			624.69				
Hadron depth		570.3	2072.4		Totals	7.384	7.384							
Hadron S/B Plate		12.7	2085.1											
Argon Gap		6.5	2091.6											
Circuit Board		2.5	2094.1											
To Top of Strong Back		9	2103.1											
to Corner of Module		6.503	2109.6	0.2	0.2			Delta Radius=Rad*(1/Cos(4.5/360*(2*pi()))-1)						
	Gap	3	2112.6											
Stay IR		13	2112.6	0.13	0.13	1.25	1.25							
Stay OR			2125.6											
Second Hadron Module	Gap	12	2137.6											
G 10 Insrance		5.5	2143.1											
Steel Plate		4	2147.1	0.1	0.1									
Copper plates	7	9		0.18	0.18	1.26	1.26	Two of 7 are half thickness						
Absorber Plates	36	10		0.1	0.1	3.6	3.6							
Sensing Plates	6	10.05		0.1	0.1	0.6	0.6		633.07		612.20	619.86	620.70	635.70
Spacers	48	2		0.038	0.038	1.824	1.824			626.39				
Hadron depth		570.3	2717.4		Totals	7.384	7.384							
Hadron S/B		12.7	2730.1											
Argon Gap		6.5	2736.6											
Circuit Board		2.5	2739.1											
To Top of Strong Back		10.7	2749.8	0.2	0.2									
to Corner of Module		6.503	2756.3					Delta Radius=Rad*(1/Cos(4.5/360*(2*pi()))-1)						
	Gap	3	2761.3											
Stay IR		13	2761.3	0.13	0.13	1.25	1.25							
Stay OR			2774.3											
Third Hadronic Module	Gap	14	2788.3											
G 10 Insrance		5.5	2793.8											
Steel Plate		4	2797.8	0.15	0.15									
Copper plates	5	18		0.2	0.2			Two of 5 are Half thickness						
Absorber Plates	24	16.65		0.1	0.1	2.4	2.4							
Sensing Plates	4	16.7		0.1	0.1	0.4	0.4							
Spacers	32	2		0.038	0.038	1.216	1.216		671.12	654.09	639.10	643.47	649.73	675.70
Hadron depth		597.9	3395.7		Totals	4.016	4.016							
Hadron S/B		12.7	3408.4											
Argon Gap		6.5	3414.9											
Circuit Board		2.5	3417.4											
To Top of Strong Back		10	3427.4	0.2	0.2									
outer radius (to corner)		10.6	3438.0					Delta Radius=Rad*(1/Cos(4.5/360*(2*pi()))-1)						
Cryostat Vessels	Gap	12	3450.0											
argon Vessel IR		50	3450.0			3.2	3.2	Cut to 5mm, weld to 5mm (two pics)						
argon Vessel OR			3500.0	1.5	1.5									
vacuum space		50												
vacuum Vessel IR		50	3550.0			3.2	3.2	Cut to 5mm, weld to 5mm (two pics)						
vacuum Vessel OR			3600.0	1.5	1.5									
Checks		3600	3600.0											

Figure 2-8. Work Sheet for Diametrical Stack-up

Ideal G10 thermal Properties

Outer "ring" R= 1421

	Cell Thickness, mm	Delta_L/L			
G10 spacer	8.815	0.0034	0.0300		
Kapton	0.4	0.0033	0.0013		
Lead	1.3	0.00577	0.0075		
Stainless Stee	0.4	0.00281	0.0011		
Prepreg	0.2	0.0063	0.0013		
	11.115		0.0412		
	Aggregate delta_L/L =		0.0037	Delta R= 5.26	mm
Aluminum		0.00372		Delta R= 5.29	mm
			Relative Delta R= -0.02		mm

Inner "ring" R= 877

	Cell Thickness, mm	Delta_L/L			
G10 spacer	4.634	0.0021	0.0097		
Kapton	0.4	0.0033	0.0013		
G10 Insert	1.3	0.0063	0.0082		
Stainless Stee	0.4	0.00281	0.0011		
Prepreg	0.2	0.0063	0.0013		
	6.934		0.0216		
	Aggregate delta_L/L =		0.0031	Delta R= 2.74	mm
Aluminum		0.00372		Delta R= 3.26	mm
			Relative Delta R= -0.53		mm

Typical G10 Properties: *0.0021 normal to thickness to 0.0063 in thickness*

Figure 2-7. EM Module Diametrical Stack-up

Calorimeter Engineering Question (Continued)

2. Integrated Liquid Argon Calorimeter Diameter

Specific Concern:

- *A concept of the barrel feedthroughs, including dimensions is needed to determine the additional diameter required as well as the interface requirements with the muon system.*

Answer:

- *Commercial pin connectors with bimetallic couplings and mounting plates can be utilized in an ASME port without impacting the radii of either the barrel or endcap calorimeter.*

Data:

The barrel feedthroughs consist of 17 sets of flange assemblies at each end of the vessel with 13 connectors in each flange, providing for 43,200 channels. The barrel feedthrough cabling requires a 50 mm clearance envelope outside the vacuum vessel from the feedthrough to the support pedestal.

Each endcap will have 2 rings of feedthroughs providing for 18 feedthroughs with 13 connectors each to accommodate 22,980 channels. The endcap feedthrough cabling requires a 40 mm clearance envelope outside of the vacuum vessel wall to the pedestal.

Figure 2-8. Connector Assembly

Figure 2-8 shows the electronic connector installation detail.

Figure 2-9. Argon and Vacuum Vessel Feedthrough Flanges

Figure 2-9 shows the typical warm and cold feedthrough flanges. Notice that the cold feedthrough is purposely designed smaller than the warm feedthrough so it can be extracted through the warm feedthrough fo servicing.

Figure 2-10. Feedthrough Plate and Pipe Extension Prior to Assembly into Vessel and Assembled

Figure 2-10 depicts how the feedthrough welded into a tube extension can eliminate excessive stress on the fragile connectors.

Figure 2-11. Section View Showing Location of Feedthroughs

Figure 2-12. End Section View Showing Feedthrough Orientation, Cable Routing Space and Support Envelope

Figure 2-12 shows the 50 mm envelope necessary for cable routing outside of thje barrel vacuum vessel.

Figure 2-13. Endcap Feedthrough Locations

Figure 2-13 defines the two locations for the feedthrough flanges in the endcap.

Figure 2-14. Feedthrough Locations at Section A-A and the Envelope Required for Cabling.

Figure 2-15. Feedthrough Locations at Section B-B and the Envelope Required for Cabling

Figure 2-16. End View of Endcap Showing Superimposed Sections A-A and B-B.

Figure 2-16 shows the overall congestion resulting from the feedthroughs and cabling in the endcap.

Figure 2-17. Cable Management Method to Avoid Multiple Cable Thicknesses.

Figure 2-17 represents one method of minimizing the cable space envelope required by assuring the minumum number of cable overlaps.

Figure 2-18. Barrel Electronic Feedthroughs Section Showing Space Required for Cabling

Figure 2-18 shows the multiple layer insulation and cabling orientation in the barrel section.

Figure 2-19. Endcap Calorimeter Feedthrough Showing Cable Clearance

Figure 2-19 shows the multiple layer insulation and cabling orientation in the endcap section.

LIQUID ARGON CALORIMETER

Electronic Feedthrough Detail

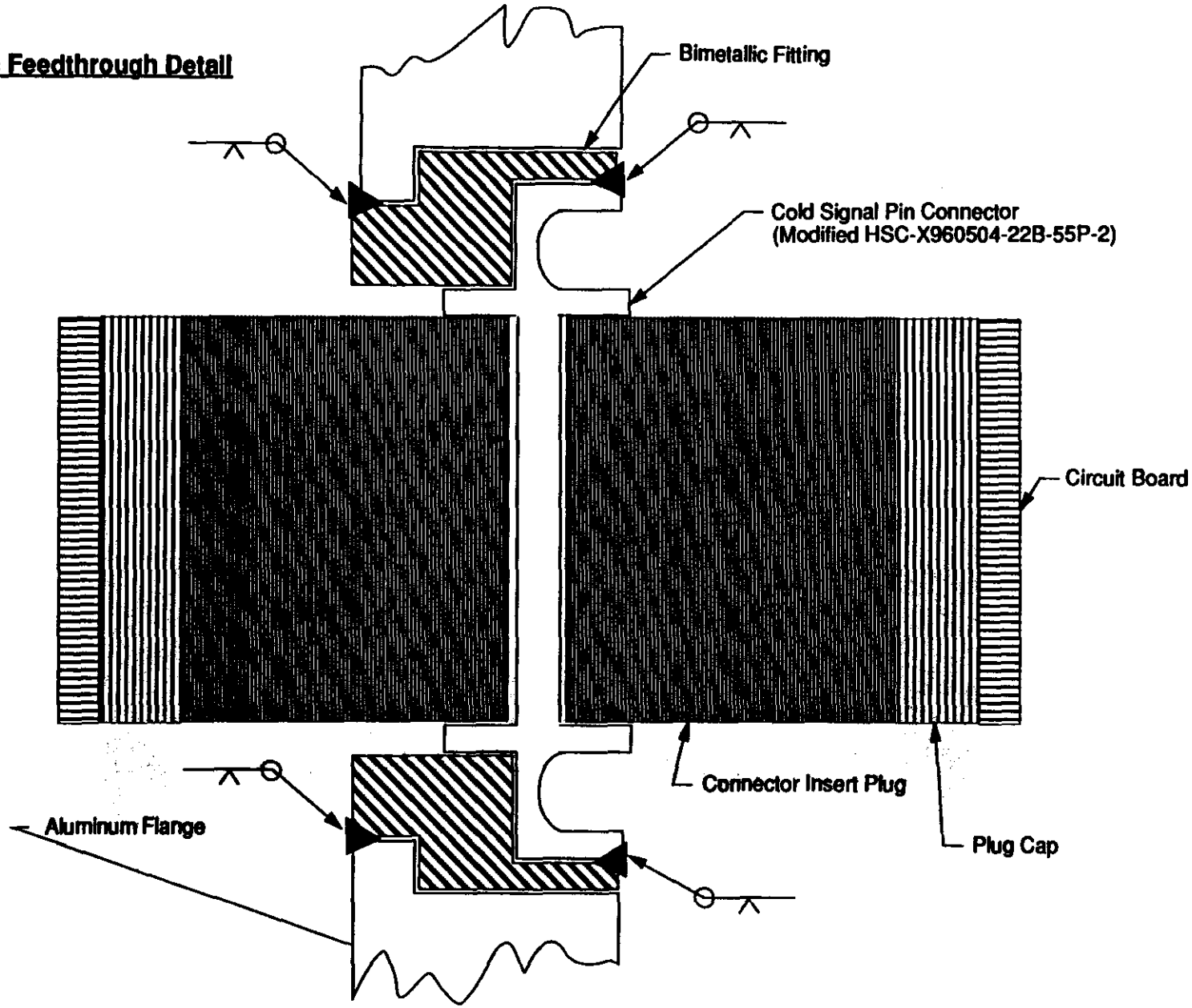

Figure 2-8. Connector Assembly

KRBarnstable FT Details

LIQUID ARGON CALORIMETER FEEDTHROUGHS

Note: The cold feedthrough is designed at a smaller diameter than the warm feedthrough and positioned concentric to it so that the cold feedthrough may be accessed by removal of the warm feedthrough.

Typical Warm Feedthrough Flange:

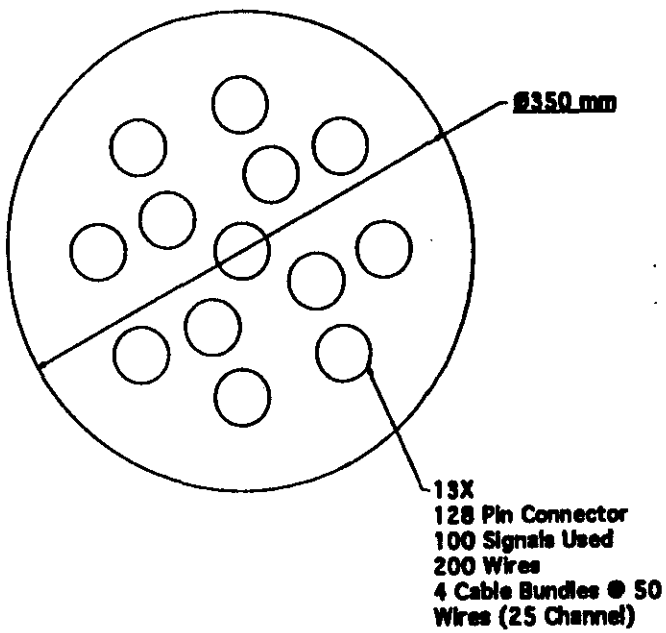

Typical Cold Feedthrough Flange:

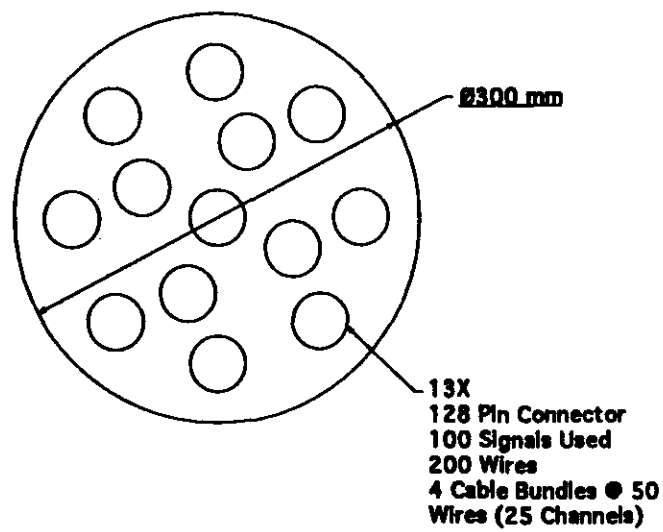

Figure 2-9. Argon and Vacuum Vessel Feedthrough Flanges

LIQUID ARGON CALORIMETER

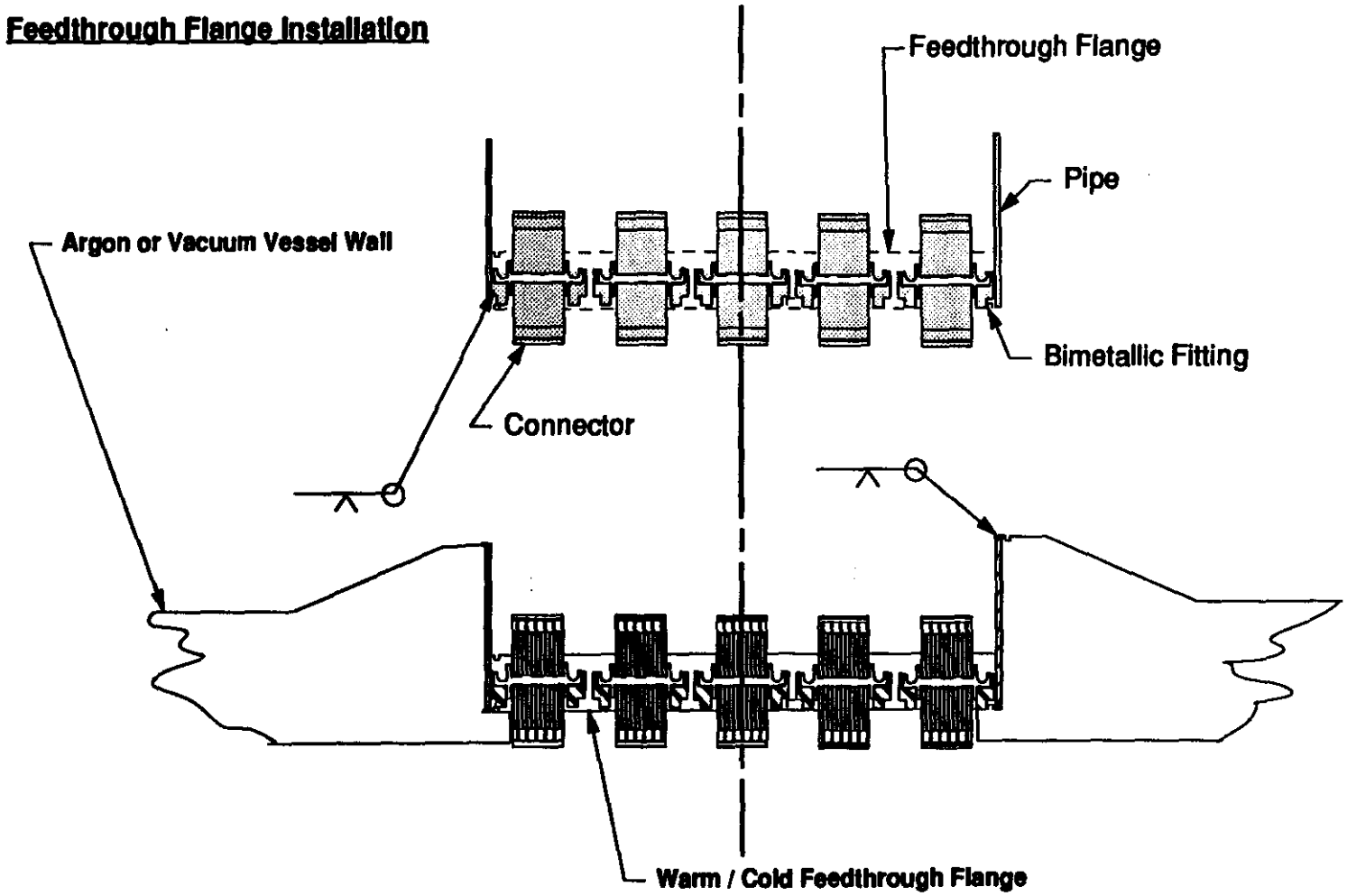

Figure 2-10. Feedthrough Plate and Pipe Extension Prior to Assembly into Vessel and Assemblied

KRBarnstable FT Details2-10

LIQUID ARGON BARREL CALORIMETER

Barrel Feedthroughs

All Dimensions in mm

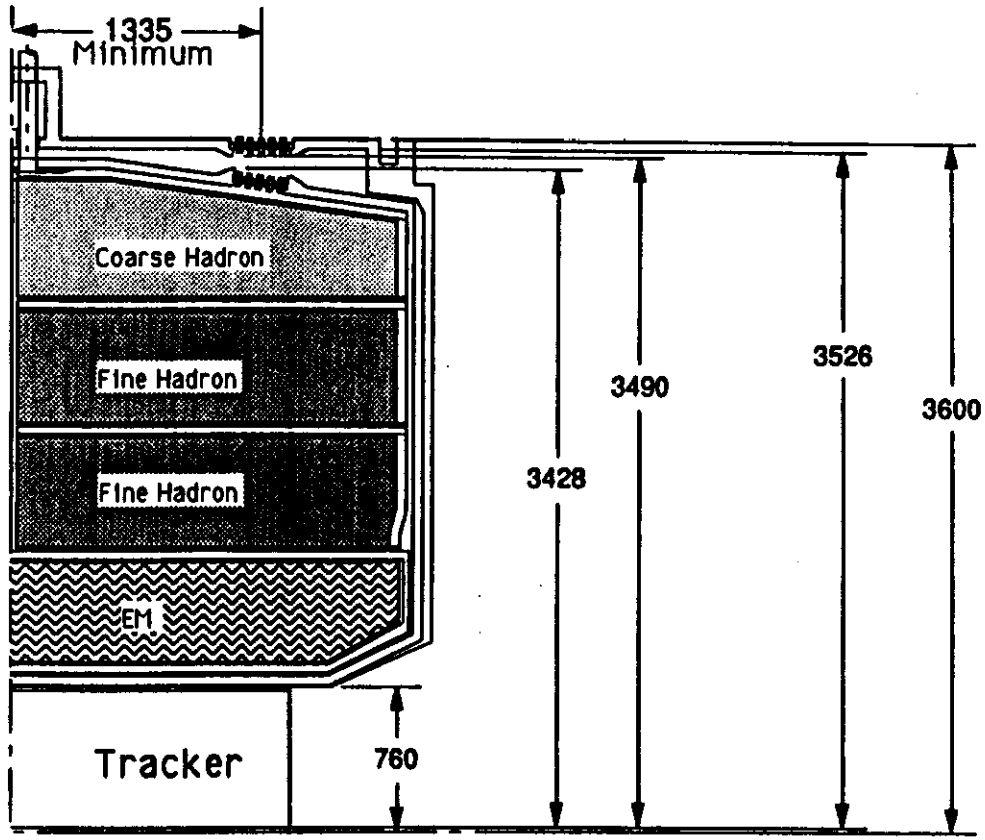

Figure 2-11. Section View Showing Location of Feedthroughs and radial dimensions

KRBarnstableBL1 Barrel FT's

LIQUID ARGON BARREL CALORIMETER

All Dimensions in mm

Barrel Feedthroughs- End View

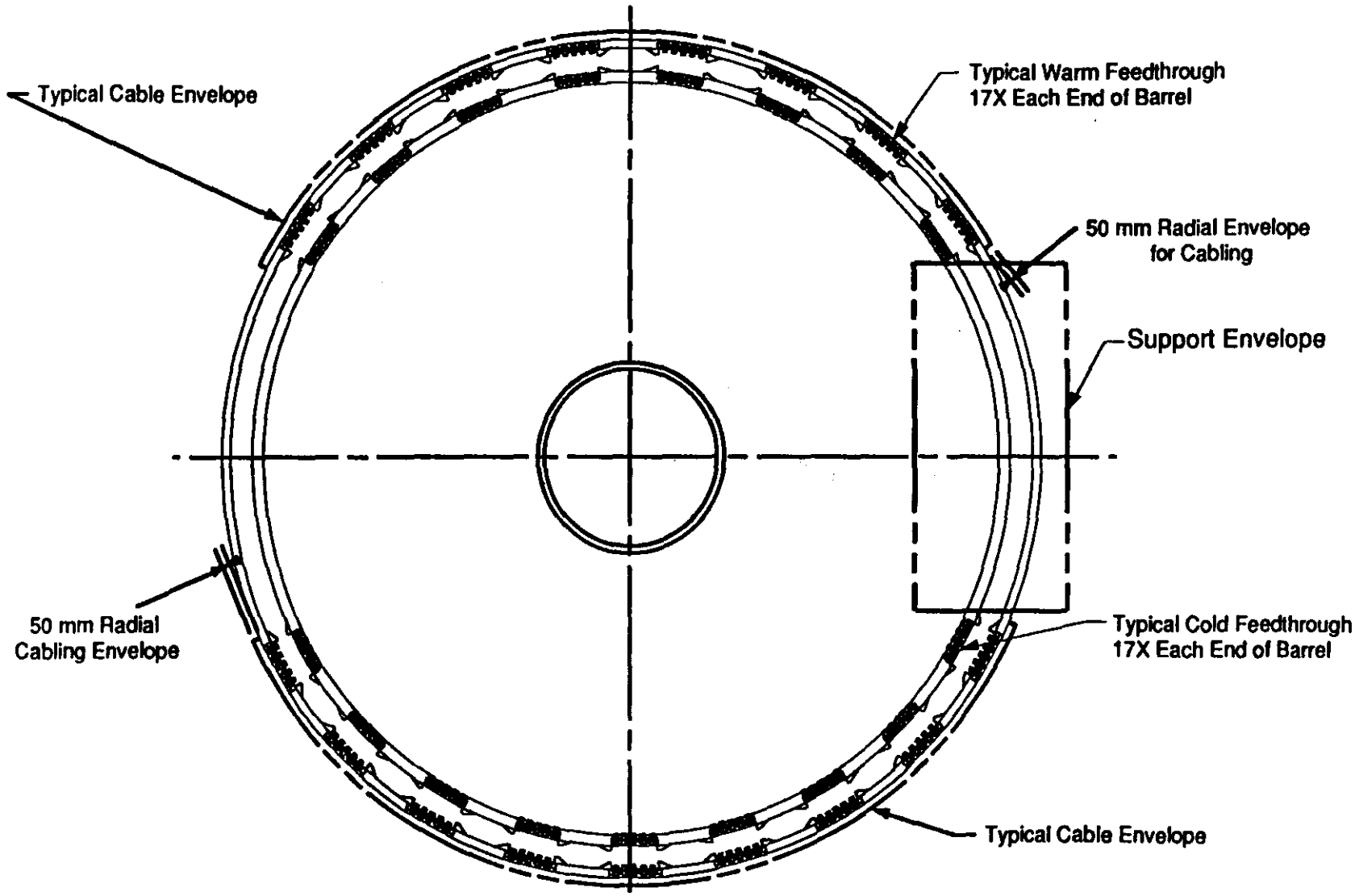

Figure 2-12. End Section View Showing Feedthrough Orientation and Cable Routing Space to Support Pedestal

KRBarnstableBL1 Barrel FT's

LIQUID ARGON ENDCAP CALORIMETER

Barrel & Endcap Feedthroughs

All Dimensions in mm

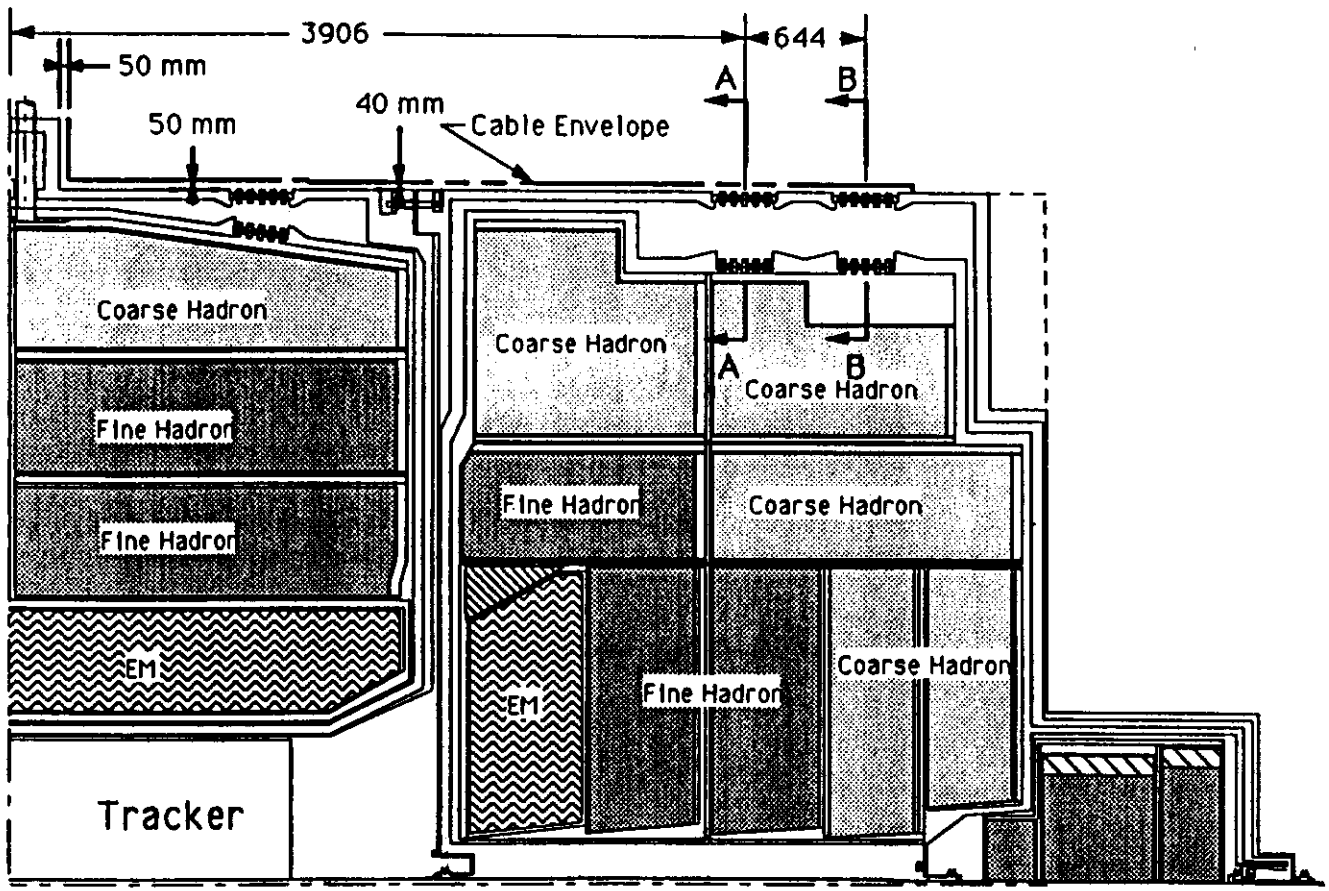

Figure 2-13. Endcap Feedthrough Locations

KRBarnstable BL1 E/C FT's 2-13>16

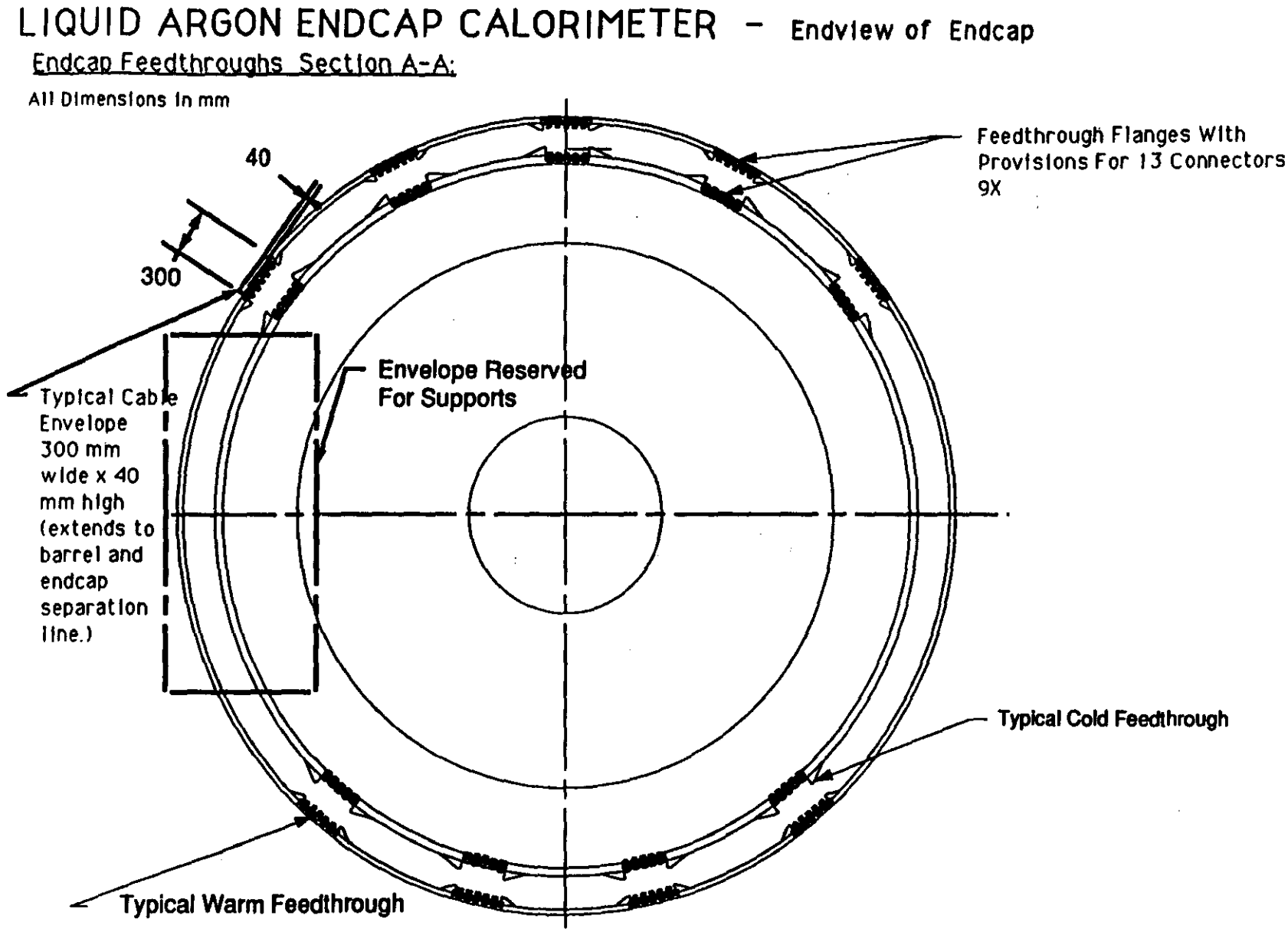

Figure 2-14 Feedthrough Locations at Section A-A and the Envelope Required for Cabling

KRBarnstable BL1 E/C FT's 2-13>16

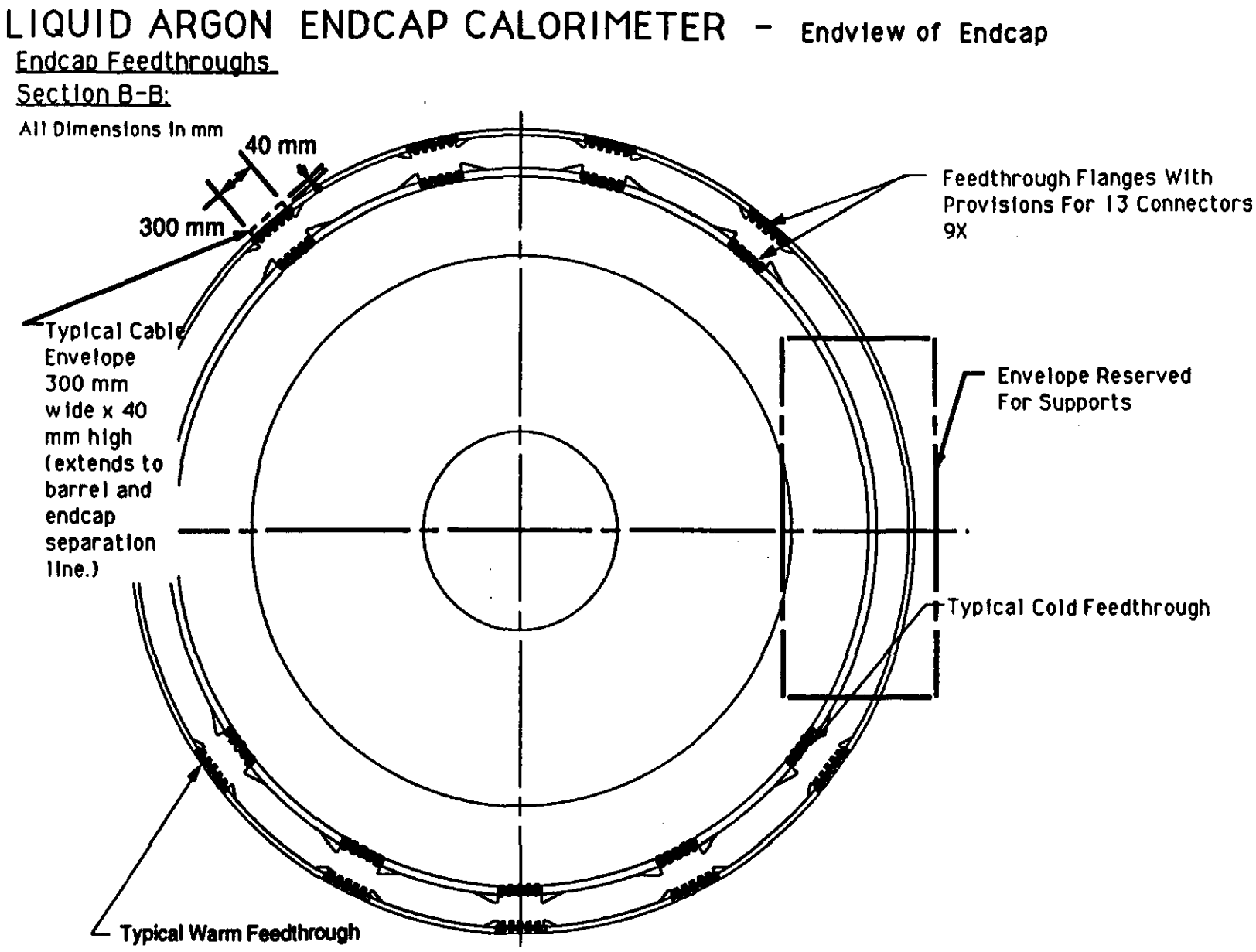

Figure 2-15 Feedthrough Locations at Section B-B and the Envelope Required for Cabling

KRBarnstable BL1 E/C FT's 2-13>16

LIQUID ARGON ENDCAP ENDCAP CALORIMETER

Endcap Feedthroughs - (Half Section End View)

All Dimensions in mm

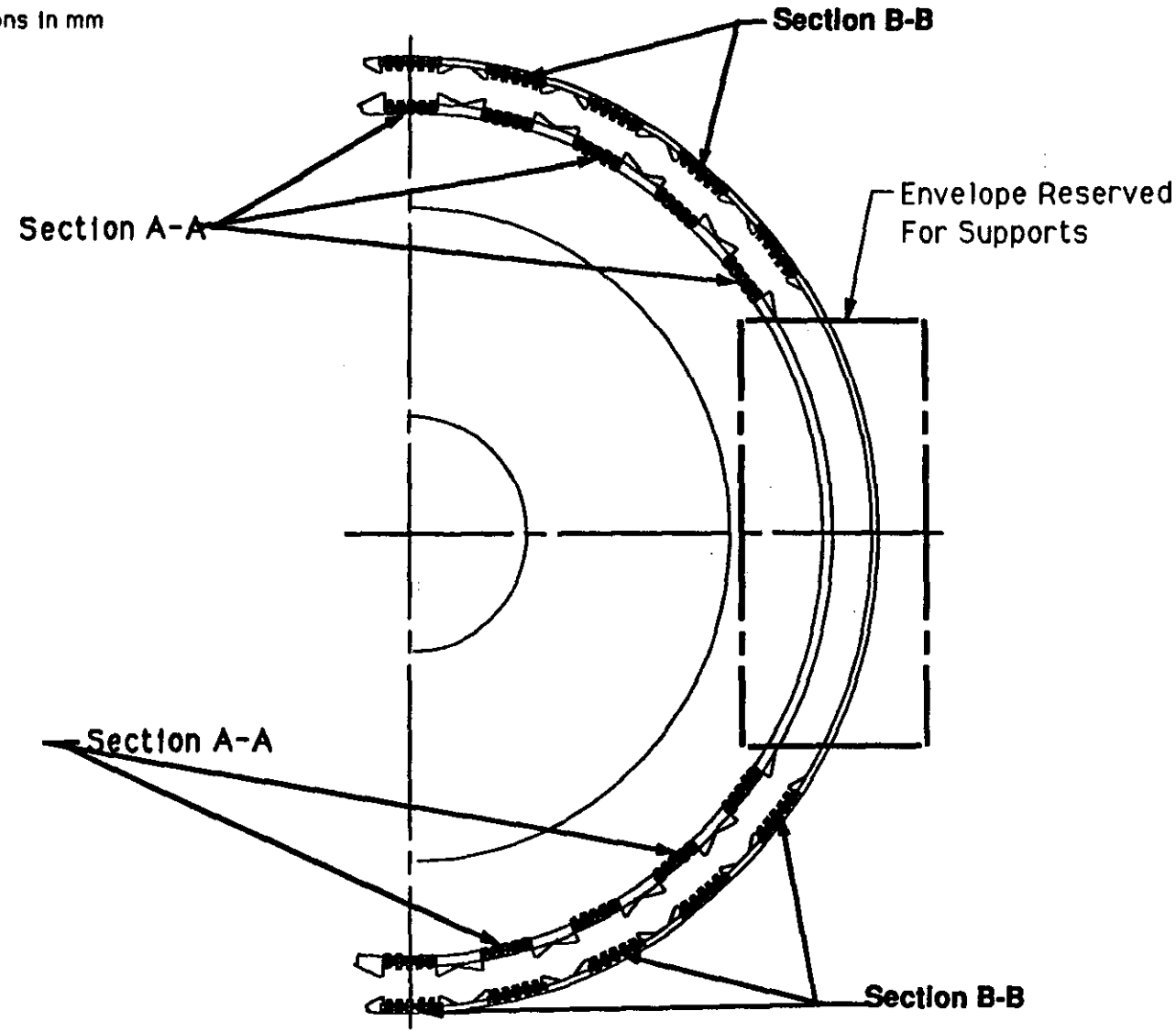

Figure 2-16. End View of Endcap Showing Super Imposed Sections A-A and B-B

KRBarnstable BL1 E/C FT's 2-13>16

LIQUID ARGON CALORIMETER - FEEDTHROUGHS

Feedthrough Twisted Pair Ribbon Cable and MLI (multilayer insulation) Detail:

Note: With proper cable orientation, there will be cable bundles from only 2 connectors overlapping at any one location.

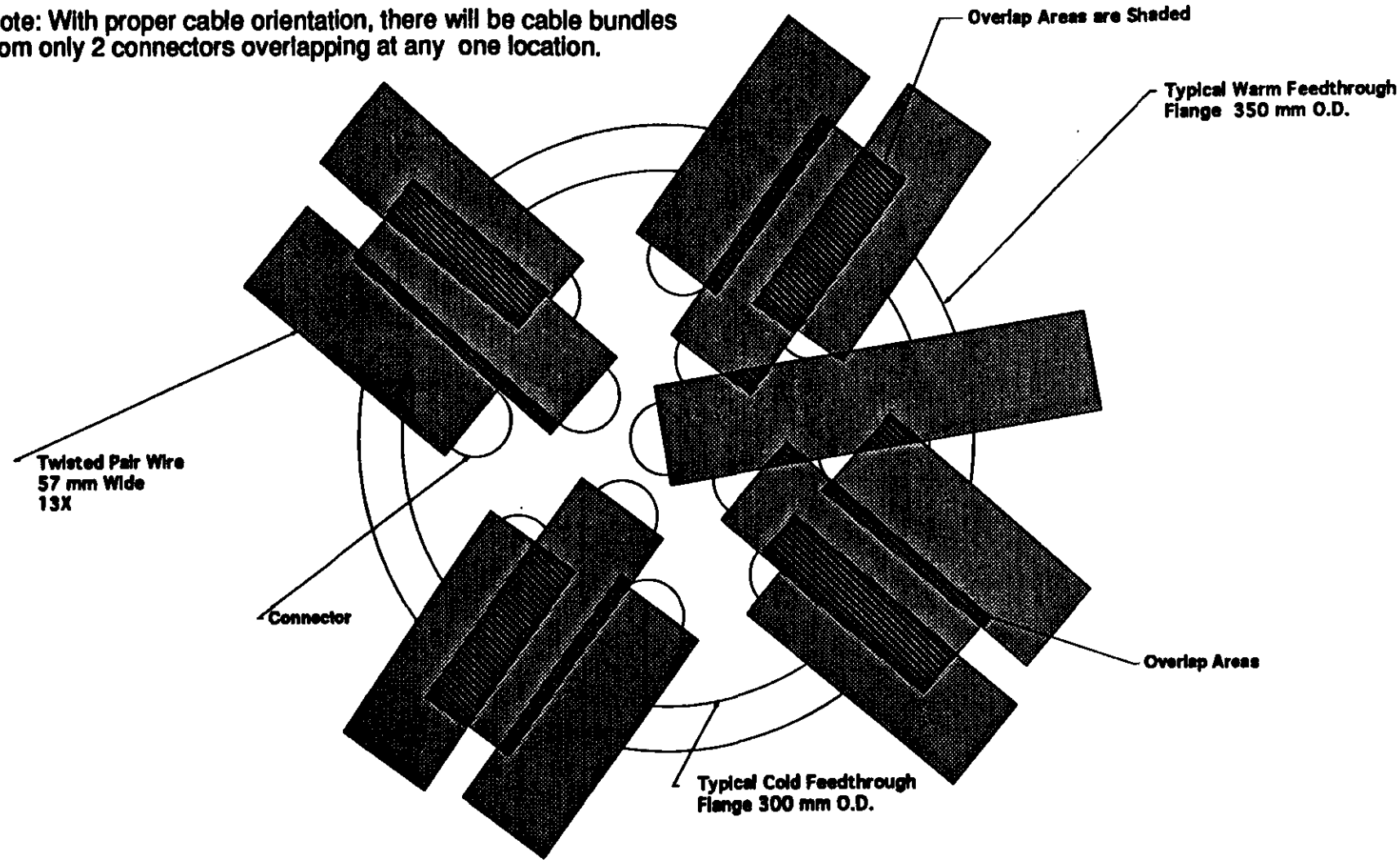

Figure 2-17. Cable Management Method to Avoid Multiple Cable Thicknesses

LIQUID ARGON CALORIMETER

Electronic Feedthrough Cross Section - Barrel Section

Note: With proper cable orientation there will be cable bundles from only 2 connectors overlapping at any one location.

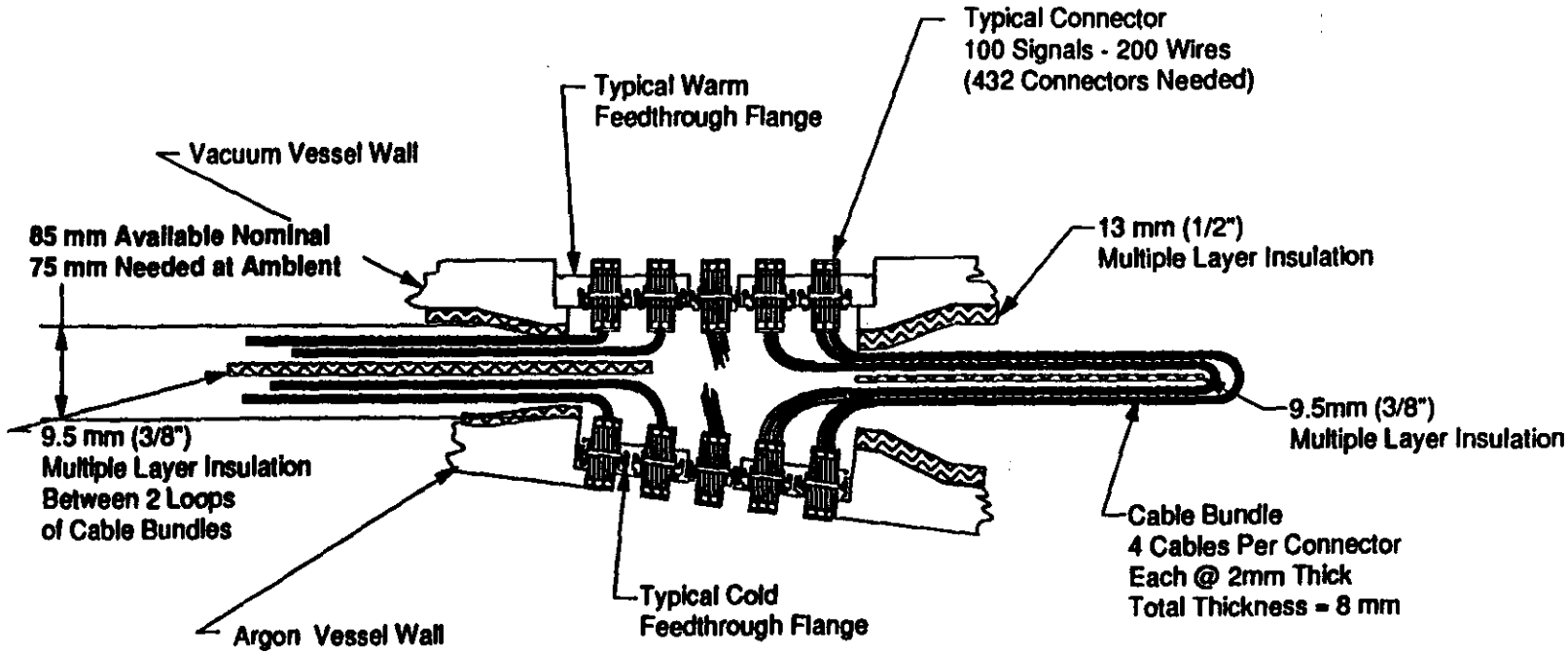

Figure 2-18. Barrel Electronic Feedthrough Section Showing Space Required for Cabling

LIQUID ARGON CALORIMETER

Electronic Feedthrough Cross Section - Endcap

Note: With proper cable orientation there will be cable bundles from only 2 connectors overlapping at any one location.

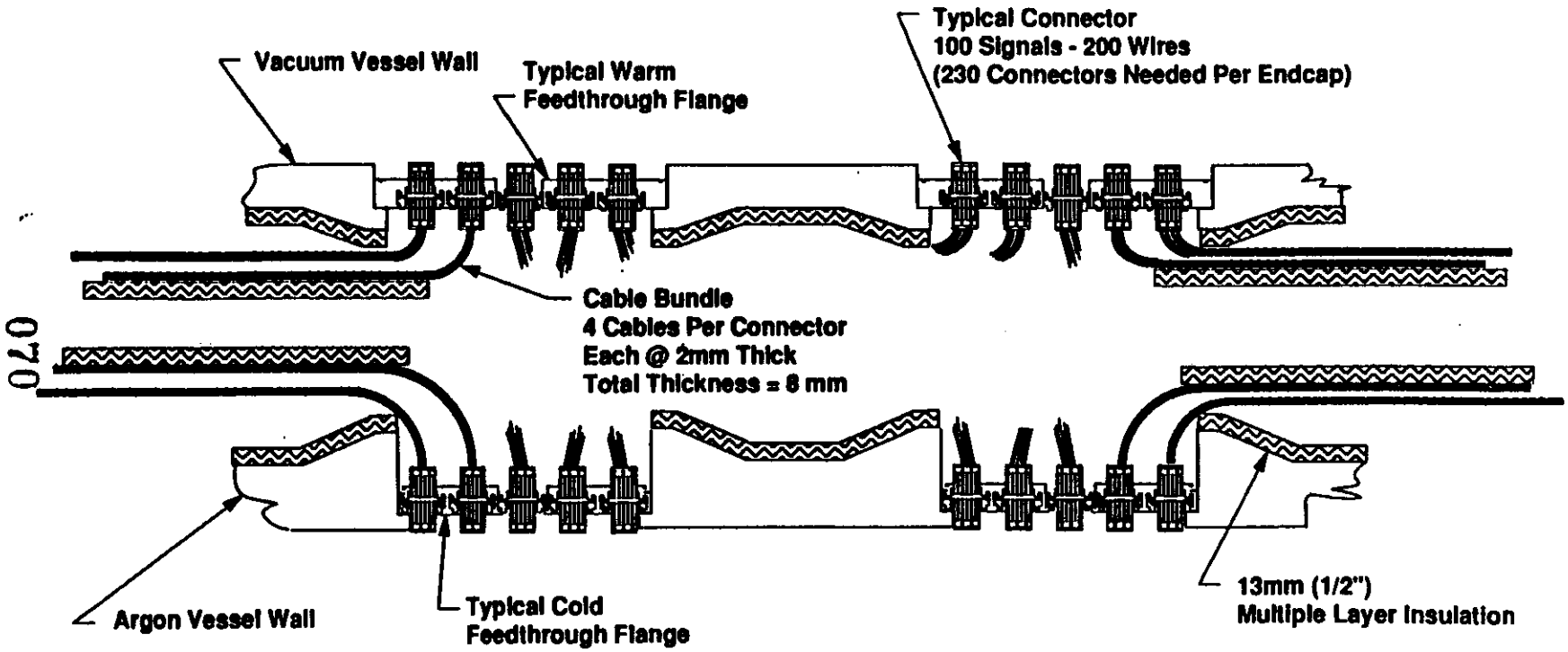

Figure 2-19. Endcap Calorimeter Feedthrough Showing Cable Clearance

Calorimeter Engineering Question (Continued)

2. Integrated Liquid Argon Calorimeter Diameter

Request: Provide a more detailed tabulation of the diametrical stack-up of the integrated liquid argon calorimeter.

Specific Concern:

- *The computation of the absorption length of the hadron layers does not appear to account for the 3-4% of absorber consumed by the tile partitions. If true, this will add approximately 5 cm to the overall radius of the assembly.*

Answer:

- *First, the goal of 12 λ is not expected to be satisfied to the 1% level. Second, the 3-4% loss of λ is only at the inner radius. At the outer radius, since the $\Delta\eta$, $\Delta\phi$ segmentation is still 0.08 (nominally) and so the loss is only ~1%. At this stage in the design we do not know the details to this few % level. For example, we are considering the use of krypton in the barrel which would more than compensate for the loss. Another design detail is that the hadronic modules are rotated in ϕ as they go out radially to eliminate going through cracks. This rotation could also be arranged so that the gaps between the tiles would not be projective.*

Calorimeter Engineering Question

3. ***Integrated Liquid Argon Calorimeter Support***

Request: Provide a scaled end section view of the liquid argon vessel cold mass supports.

Specific Concern:
•*Insufficient space is available for the cold mass support without reducing the active absorber in the hadron calorimeter.*

Answer:
•*Sufficient space has already been allocated for the cold mass supports, as shown in Figures 3-1 & 3-2, and further reduction is not required in the active absorber.*

Data:
•Plan and end views of the liquid argon vessel showing the locations of the stanchions (cold mass supports) are given in Figures 3-1 & 3-2, respectively.
•The Barrel Argon Vessel and Calorimeter weighs 900 MT. This weight is equally shared by four stanchions. In addition, each stanchion is subject to a lateral deflection of 15.57 mm ($0.004\Delta L/L$ * 3892 mm) due to a thermal contraction from 296 to 86°K (reference Figures 3-1 & 3-2).
•Each Endcap Argon Vessel and Calorimeter weighs 636 MT. The front two stanchions each carry 276 MT and are subject to a lateral deflection of 14.48 mm ($0.004\Delta L/L$ * 3619 mm) due to a thermal contraction from 296 to 86°K (reference Figures 3-1 & 3-2). The aft two stanchions each carry 42 MT and are subject to a lateral deflection of 16.60 mm ($0.004\Delta L/L$ * 4150 mm) due to a thermal contraction from 296 to 86°K (reference Figures 3-1 & 3-2).
•The stanchions consist of plates made of Inconel (reference Figure 3-3, 3-3a), are sized based on beam column analysis and are subject to the guidelines of the AISC (reference Figure 3-4).

Figure 3-1. Plan View of Liquid Argon Calorimeter Showing Stanchion Locations

This plan view shows the critical dimensions for considering the thermal effects on the stanchions. The calorimeter is supported by a pedestal structure centered at the interaction point. The pedestal cradle is 500 mm wide at the calorimeter interface and cradle loads are spread to the outer calorimeter vessel wall by a 500 mm wide stiffener ring around the outside of the calorimeter. The calorimeter consists of three assemblies, two endcaps and a barrel assembly. The barrel assembly is supported on the stanchion pedestal and the two endcaps are supported on the ends of the barrel assembly. The forward calorimeter shares the same liquid that is in the endcap and is supported by the endcap but has alignment capability so it can be centered on the beam line. Upon removal of an endcap additional support will be required to counteract the resultant unbalanced load.

Figure 3-2. End Views of Liquid Argon Calorimeter Showing Stanchion Locations

This defines the end view location and the proximity to the argon and vacuum vessels for both the barrel calorimeter and the endcap calorimeter.

Figure 3-3. Barrel Stanchion Basic Dimensions

The detailed dimensions of the barrel supports are shown. The plates are brazed at the top and bottom and the gaps between the plates and the plate orientation allows flexibility to accomodate the thermal effects. The radial orientation of the stanchion plates help to ensure that the cold vessels centerline has little or no movement due to the changes from ambient temperatures to cryogenic temperatures.

Figure 3-3a. Barrel Stanchion Assembly

Figure 3-3a shows the overall stanchion assembly. The upper spherical bearing helps to evenly distrubute the load to the vertical plates. The thermal intercept portion of the stanchion assembly will be used to dissipate the majority of the heat so minimal heat penetrates the argon vessel wall.

Figure 3-4. Loads & Analysis Results for Barrel & Endcap Stanchions

Figure 3-4 lists the analysis involved in the stanchion support design.

Note: All Dimensions in mm

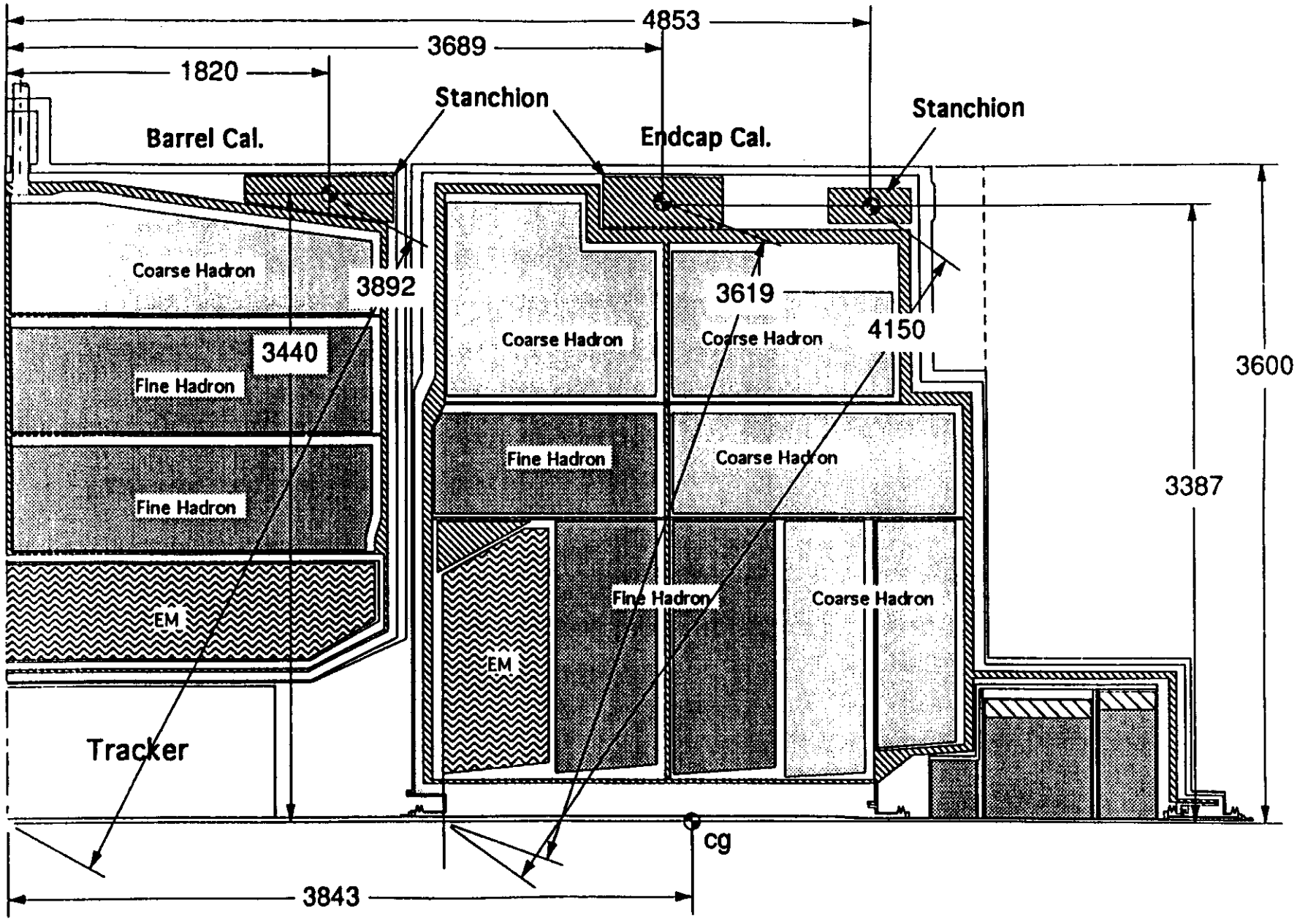

Figure 3-1 Plan View of Liquid Argon Calorimeter Showing Stanchion Locations

LLMason B/L1.Supports920620

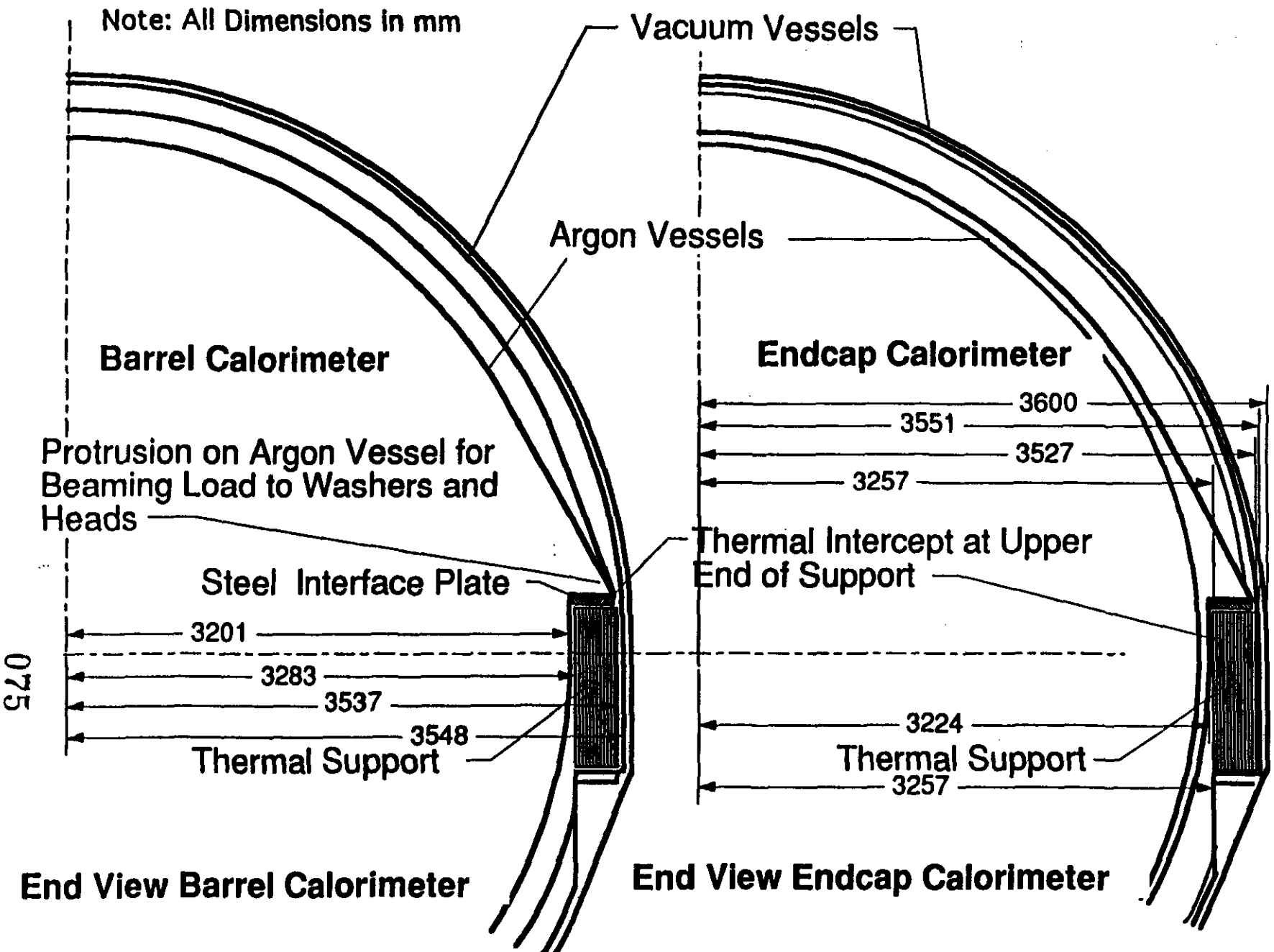

Figure 3-2 End View of Liquid Argon Calorimeter Showing Stanchion Locations

LLMason B/L1.Supports920620

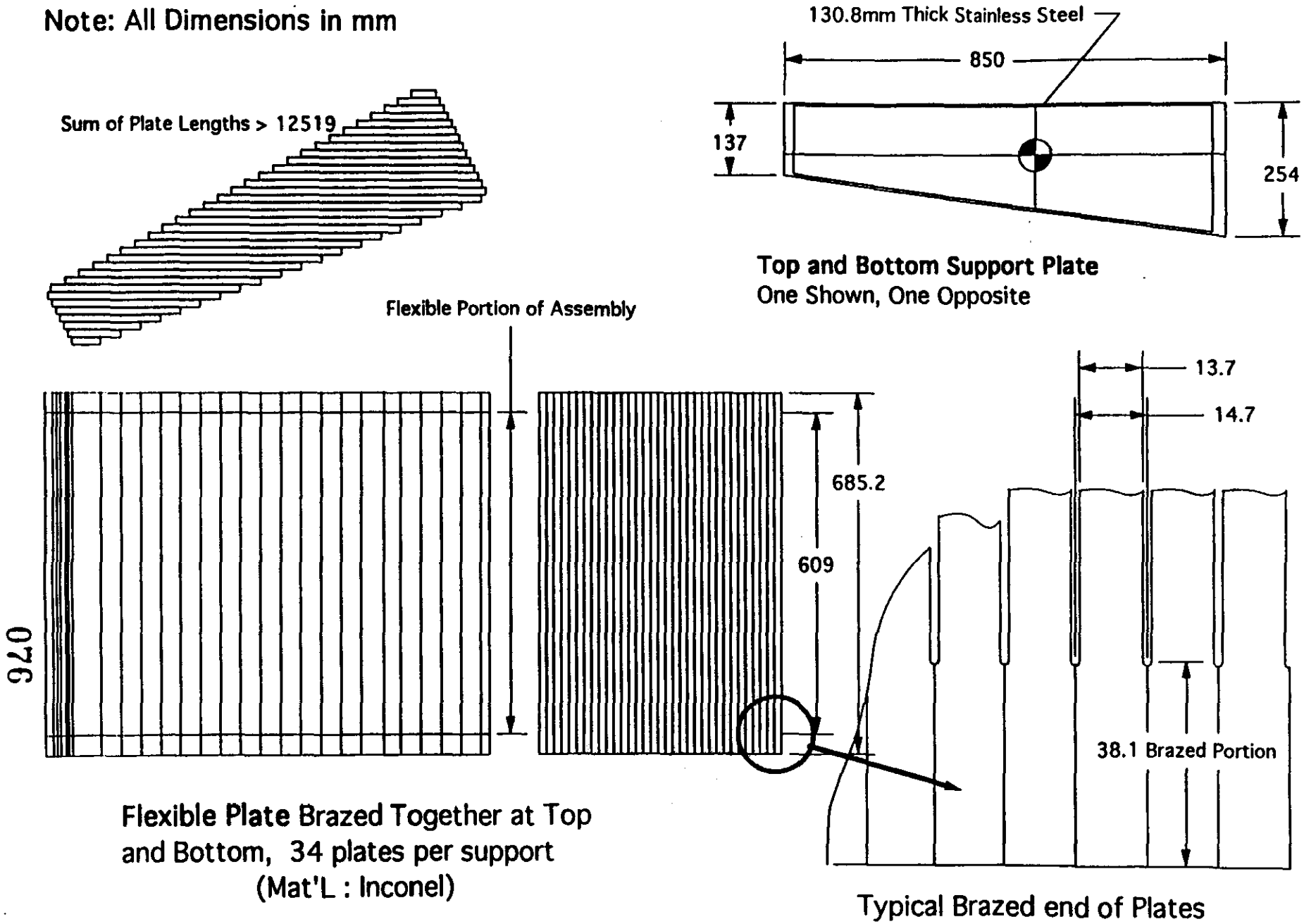

Figure 3-3 Barrel Stanchion Basic Dimensions

LLMason 920717 Column Support

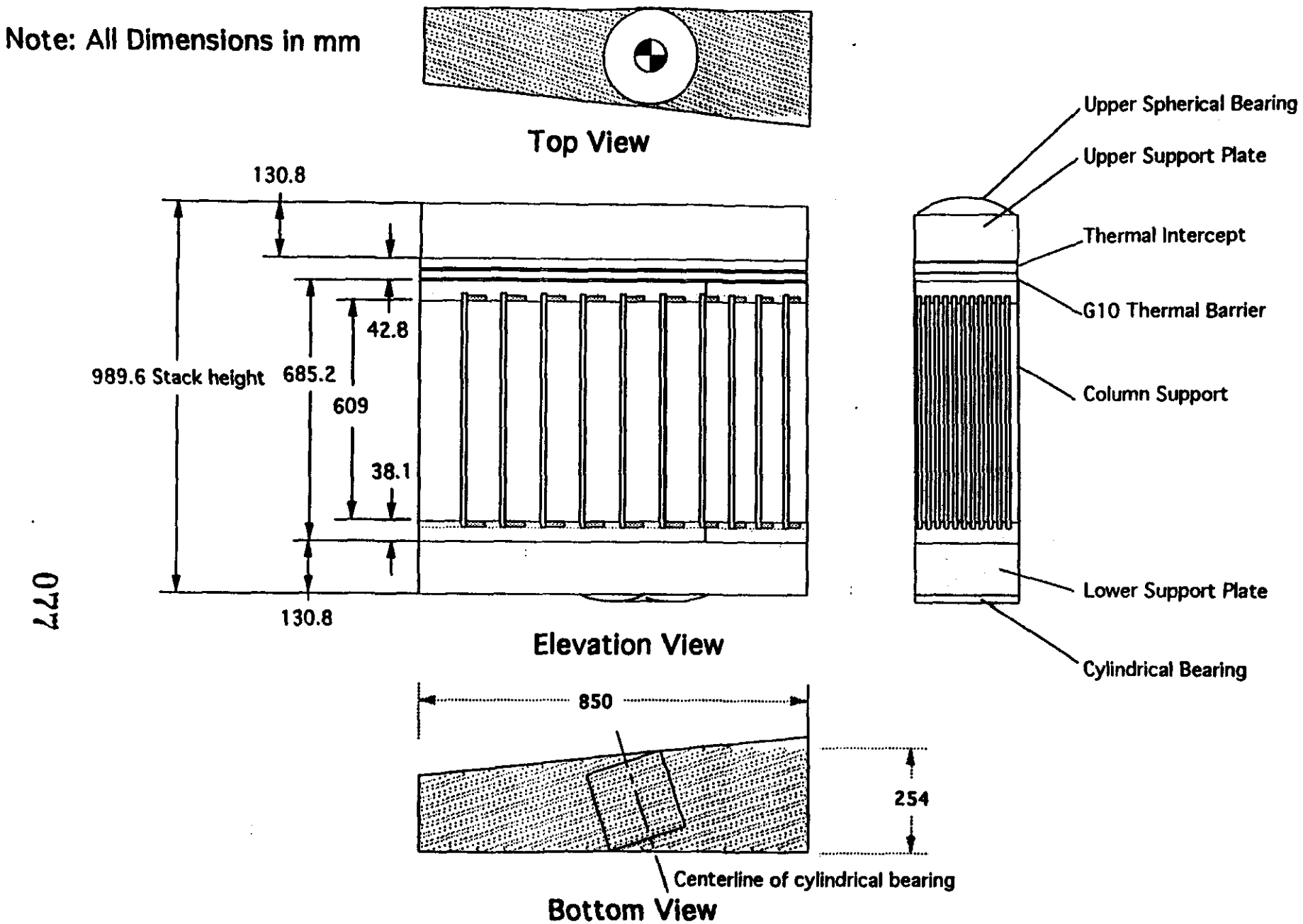

Figure 3-3a Barrel Stanchion Assembly

LLMason 920717 Column Support

Endcap Calorimeter Supports
Front support loads is 275MT

Input	Name	Output	Unit	Comment
24	L		in	Length of beam(input)
	b	492.86668	in	length of plate(input)
.52	t		in	thickness of plate(input)
	r	.15011107	in	radius of gyration
	A	256.29067	in^2	area of plate
2.9E7	E		psi	Young's Modulus(input)
	I	5.775	in^4	Area moment of inertia
	z	.26	in	Neutral axis to stress point
	c	.26		max distance to neutral axis(t/2)
				FOR FIXED/GUIDED BEAM AISC ASD p.5-135
1.2	K			effective length factor(input)
140000	Fy		psi	yield stress(input)
	bt	492.86668	in	Total stantion length
605000	Pt		in	Total stantion load
	At	256.29067	in^2	Total stantion area(input)
				LOAD ON STANCHION
0	a		in	Lateral Load distance from left end
	W	-32790.1	lb	Lateral Load
605000	P		lb	Axial Compressive Load(input)
				CRITICAL BUCKLING LOAD ON STANCHION
	Pcr	2869680.2	lb	CRITICAL Compressive Load(EULER)
	err	'_		Caution Message
				CRITICAL Compressive Load(AISC)
	Pcr1	1039739.2		Pcr1<Pcr
	Fa	4056.8749	lb	CRITICAL Compressive Load(AISC) Fa<Pcr
				AT SECTION:
0	x		in	Distance from left end
	V	0	lb	Transverse shear
	M	-479693.7	in-lb	Bending moment
	theta	0	rad	Slope
	y	.285	in	Deflection
				Stress:(Axial Load Comp NOT Included)
	st	'_	psi	Fiber stress at stress point z
	sty	'_	psi	Max Fiber stress at extremity y
				AT LEFT END:
	RA	0	lb	Vertical reaction
	MA	-479693.7	in-lb	Reaction Bending moment
	thetaA	0	rad	Slope
.285	yA		in	Deflection (input)

Figure 3-4. Loads & Analysis Results for Barrel & Endcap Stanchions

Endcap Calorimeter Supports (continued)
Front stanchion load is 275MT

Input	Name	Output	Unit	Comment
				AT RIGHT END:
	RB	-32790.1	lb	Vertical reaction
	MB	479693.72	in-lb	Reaction Bending moment
	thetaB	0	rad	Slope
	yB	0	in	Deflection
				MARGIN OF SAFETY BASED ON AISC
	Fb	105000	psi	allowable bending stress
	Fv	56000	psi	allowable axial stress
	fb	21596.289	psi	applied bending stress
	fa	2360.6009	psi	applied axial stress
	Cm	.85		AISC restraint constant
	fcratio	.58187669		ratio of fa/Fa
				if fa/Fa> 0.15
1	comb			margin of safety(<=1.0)
	comb1	.23378134		margin of safety(<=1.0)
				if fa/Fa<= 0.15
	comb2	.78755563		margin of safety(<=1.0)

Figure 3-4. Loads & Analysis Results for Barrel & Endcap Stanchions (continued)

TK Solver was used to size the stanchions using criteria outlined by the AISC. The Roark & Young beam column equations together with the structural equations given by the AISC are presented below for your information:

```
*       call crit(P,E,I,L;Pcr,k,err)
*       call get_tab(matl#,matl,E)
*       call case(W,E,I,L,a,k,P;RA,MA,thetaA,yA,RB,MB,thetaB,yB,case)
*       call load(E,I,L,a,RA,MA,thetaA,yA,x,k,P,W,0,0,0;V,M,theta,y)
*       z=t/2
C       z=given('z,z,'_)
*       if given('z) then st=M*z/I else st='_
*       if known('axis,1,0)=0 then I%c='_
*       if I%c<>'_ then sty=M/I%c else sty='_
*       call clear()
*       if plot='y then call genplot(E,I,a,RA,MA,thetaA,yA,L,I%c,k,P,W,0,0,0)
*       if table='y then call gentable(W,0,0,0)
*       bt=Pt/P*b
*       At=bt*t
*       I= 1/12*b*t^3
*       r=t/sqrt(12)
*       A=b*t
        "AISC ASD 9th edition p.5-42"
*       Fa=12*pi()^2*E/(23*(K*L/r)^2)
*       Pcr1=Fa*A
*       fa=P/A
        "AISC ASD 9th edition p.5-48"
*       Fb=.75*Fy
*       Fv=.40*Fy
*       fb=MB*c/I
*       c=t/2
        "AISC ASD 9th edition p.5-54"
*       Cm=.85
*       if fcratio>=1 then comb=fa/Fa+fb/Fb
*       if fcratio<1 then comb=fa/Fa+(Cm/(1-fa/Fa))*fb/Fb
*       fcratio=fa/Fa
*       comb1=(fa/(0.6*Fy))+abs(fb/Fb)
*       comb2=(fa/Fa)+(fb/Fb)
```

Figure 3-4. Loads & Analysis Results for Barrel & Endcap Stanchions (continued)

	Barrel and Endcap Thermal Expansion and Loads						
	Dimensions	mm	Loads	lbs	MT Total	MT ea.	
Endcap	L1	3689	Load1	1214082	552	275.93	
	L2	4853	Load2	185118	84	42.072	
	Cg	3843	Weight	1399200	636	318	check
Barrel	Four Equally Loaded Stanchions				900	225	
Moments=Load1*L1+Load2*L2-Weight*Cg							
Load1+Load2=Weight							
Load1*L1+(Weight-L1)*Load2=Weight*Cg							
Load1=(Weight*Cg-Weight*L2)/(L1-L2)							
Thermal Expansion for AL 5083 (296 to 86°K)							
Dimensions	Integrated	Delta L		Delta L from			
mm	thermal	total deflection		undeflected position			
Length	Expansion	mm	inches	inches			
L	Delta L/L						
3892	0.004	15.57	0.61	± 0.305			
3619	0.004	14.48	0.57	± 0.285			
4150	0.004	16.60	0.65	± 0.325			

Figure 3-4 Loads & Analysis Results for Barrel & Endcap Stanchion (continued)

Calorimeter Engineering Question

4. Integrated Liquid Argon Calorimeter Fabrication

Request: Outline the general procedure for the manufacture of the Integrated Liquid Argon Calorimeter by an international collaborator.

Specific Concern:

- *The large aluminum vessels will require relatively sophisticated and difficult procedures which may not be possible for most international collaborating institutions.*

  Due to the size of the assembly and the method of fabrication the cost estimate specifies that approximately 40% (est., 183 PY) of all fabrication/test/installation labor will be performed at the SSCL.

  It will be difficult to enforce quality control standards if module work is performed off-shore and final testing is completed when the cryostats are closed at the SSCL. Of particular concern are the potential problems with dirt, shipping, and mishandling between the module fabrication source and the SSCL.

Answer:

- *The cryostat costs are about 5% of the entire calorimeter budget. So even in the worst case, it could be made entirely in the US. However, we are open to contributions that potential GEM collaborators can make. The assembly of the cryostat involves many smaller pieces which could be fabricated off-shore and put together on site. The cryostat is aluminum and so cleaning, shipping and handling should be able to be easily accomplished. The quality control question applies to ANYTHING made ANYWHERE. There needs to be involvement by the physicists in the collaboration both in the U.S.. and off-shore to insure that any piece made is inspected and tested at the site where it is fabricated.*

  We are now talking seriously with our Chinese collaborators in GEM about the fabrication in China. There is genuine interest on the part of the Chinese. However, we are not at the stage in the discussion where we know whether just module components would be fabricated in China or assembled modules. Much of the labor is in the preparation of the parts both for the EM modules and especially for the hadronic modules. In the hadron calorimeter, tiles of copper need to be arranged and then laminated. This is a labor intensive activity.

Specific Concern:

- *Facilities at the SSCL will require special atmospheric conditioning and will thus add significant cost to the overall project.*

Answer:

- *The requirement is that the relative humidity be less than 40% and that a modest clean room environment be established. The goals for the clean room are that debris of the size of a fraction of a mm be excluded. This is not the kind of clean room that is difficult or expensive to establish. We are talking about the order of a very few hundred thousands of dollars. A model would be the clean room built at Fermilab for the D0 detector.*

Calorimeter Engineering Question

5. ***Integrated Liquid Argon Calorimeter Assembly Procedure***

Request: Provide sketches explaining the test and installation sequence of the barrel EM calorimeter in the integrated liquid argon calorimeter.

Specific Concerns:

- *The proposed EM installation operation does not appear to provide for the routing of cables and services from the EM to the barrel feedthrus.*

Answer:

- *EM installation operation does provide for the routing of cables and services as shown in Figure 5-1.*

Data:

- 30 mm of radial space is allocated between the cryostat wall and both the inner radius and ends of the EM section. It is estimated that 20 mm of space is required for these areas. The space between the EM and hadronic modules will carry twice as many cables and so 50 mm of space has been allocated in these areas (see Figure 5-1).

Figure 5-1. EM Channel Cable Management

Approximately 20 mm of space is required for EM cable routing around the majority of the EM module. If all the cabling for the front and back EM segmentation were stacked in one location, then 40 mm of space is required. However, 40 mm to 50 mm of space is available and proper management can minimize the cable stack height and therefore optimize the cable clearances.

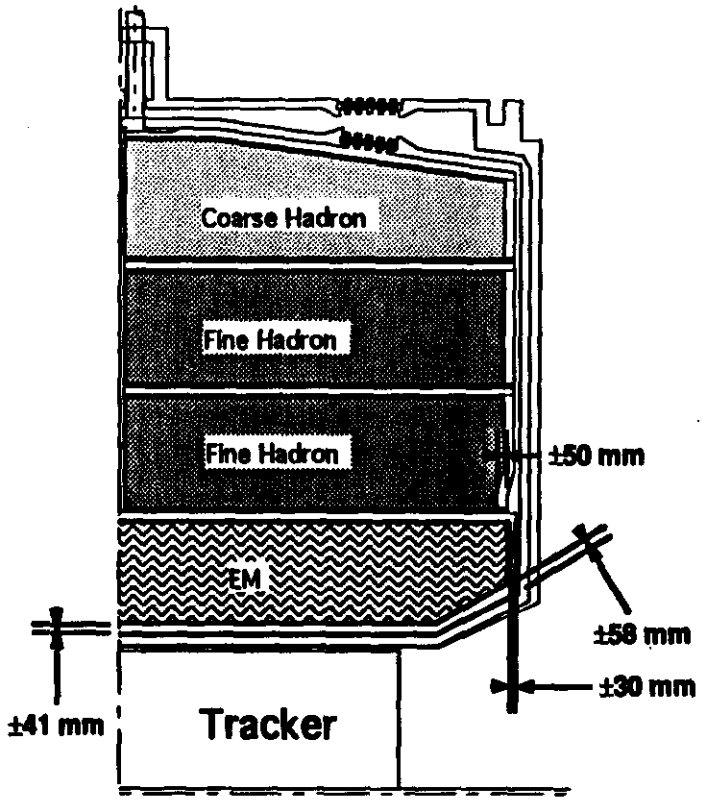

Data (Per 9º Segment):
Typical For Front and Back Segmentation

Add 10% for extra wires (clock channels, calibration channels, etc.)
Towers in Eta = 43
Towers in Phi = 5

43 towers x 5 towers x 1.1 = 236 pairs of wires
x 2 wires / channel

= 472 wires / 50 wires/cable

= 10 cables
x ±2 mm / cable
20 mm Cable Space

If Front & Back Segmentation cabling is Stacked, the Cable Space = 40 mm. If off-set the cabling height remains 20mm.

Figure 5-1 EM Channel Cable Management

KRBarnstableBL1 Barrel Channel Ct.

Calorimeter Engineering Question

5. Integrated Liquid Argon Calorimeter Assembly Procedure

Request: Provide sketches explaining the test and installation sequence of the barrel EM calorimeter in the integrated liquid argon calorimeter.

Specific Concern:

- *The fully assembled barrel (62 Mt) and endcap (13.2 Mt) accordion calorimeters must be functionally tested prior to the installation in the integrated assembly.*

Answer:

- *The test of any noble liquid calorimeter involves, the measurement of the capacitance of each channel to check the connections, the measurement of the leakage current at high voltage to eliminate shorts, and the full test of the preamps and calibration circuits. These tests will be done at every major stage in the assembly and installation. If these tests are successful we will be confident that the calorimeter will function correctly. We do not require the beam testing of all modules of the calorimeter.*

Calorimeter Engineering Question (continued)

5. ***Integrated Liquid Argon Calorimeter Assembly Procedure***

Request: Provide sketches explaining the test and installation sequence of the barrel EM calorimeter in the integrated liquid argon calorimeter.

Specific Concerns:

- *Sealing the liquid argon vessel after the installation of the EM assembly appears to involve significant risk due to proximity of the welds to the cables.*

Answers:

- *Approach shown in Figures 5-4 & 5-5 has been taken to mitigate the risk. However, test coupons should be studied to evaluate the extent of this concern.*

Data:

- There is considerable risk to the EM cabling due to the proximity of the welds to the cables. This is especially true if the stays are solid plates (reference Figure 5-2). Since we must mitigate the heat, careful cable management, limited heat input during welding and some more shielding (insulating) will be necessary. A solid plate stay concept can utilize cooling tubes during the welding operation to prevent heat damage to cabling. These cooling tubes can be removed after the module stay welding operation is completed. Additional valuable space will be used to incorporate a backing bar in the design as required by ASME code.

- Instead of using solid plates as stays better options exist. One such option would be to replace the solid plate stay with two tubes (reference Figure 5-3). The tubes would serve a dual role by acting as a stay and providing an active cooling tube for cooling the preamps during operational usage. The welding and overall assembly is easier and less heat input is required for the necessary partial penetration weld. This concept also eliminates the need for a backing bar since a full penetration weld is no longer required. The final weld is made on the outside and the overall heat input and cable shielding concerns are less.

- Sealing the liquid argon vessel after the installation of the EM assembly involves significant risk due to proximity of the welds to the cables. However, by using shields in the vicinity of the weld joints and by using bolted connections this risk can be minimized (reference Figures 5-4 & 5-5).

Figure 5-2. Solid Plate Hadron Module Stay Concept

The solid plate stay requires a full penetration weld so a backing bar must be incorporated into the design to meet ASME requirements. Cooling tubes can be used during the welding operation in order to dissipate the heat and thus protect the cables. The cooling tubes can be removed after welding operations are completed. The incorporation of a backing bar into the solid plate concept uses up valuable space.

Figure 5-3. Cooling Tube Hadron Module Stay Concept

The cooling tube stay concept uses two tubes in place of the solid plate configuration in Figure 5-2. This concept may also use cooling tubes during the welding operation but less heat will be encountered since only partial penetration welds are required. No backing bar is necessary so less space is required. Also the modules are more accessible and the two tubes provide a means of actively cooling the preamps during operation of the calorimeter.

Figure 5-4. Weld Joints Shielded & Purged During Assembly of Barrel EM Calorimeter

This shows a variety of assembly scenarios and includes weld joints that have backing bars incorporated into the design as well as flanges that are bolted and then seal welded. Shields can be tack welded inside of the joints and used to direct the cold gas behind the weld areas.

Figure 5-5. Weld Joints(Baseline) Shielded & Purged During Assembly of Barrel EM Calorimeter

In this scenario all joints are welded instead of welded and bolted as in Figure 5-4. As with the bolted concept this requires purge shields to cool the areas behind the welds but now full penetration welds are used and require backing bars.

Figure 5-6. Reference Calorimeter Configuration

This configuration defines the weld locations within the barrel calorimeter as were described in Figures 5-4 and 5-5.

Note: See Figure 5-6 for Weld Zone Locations on Calorimeter

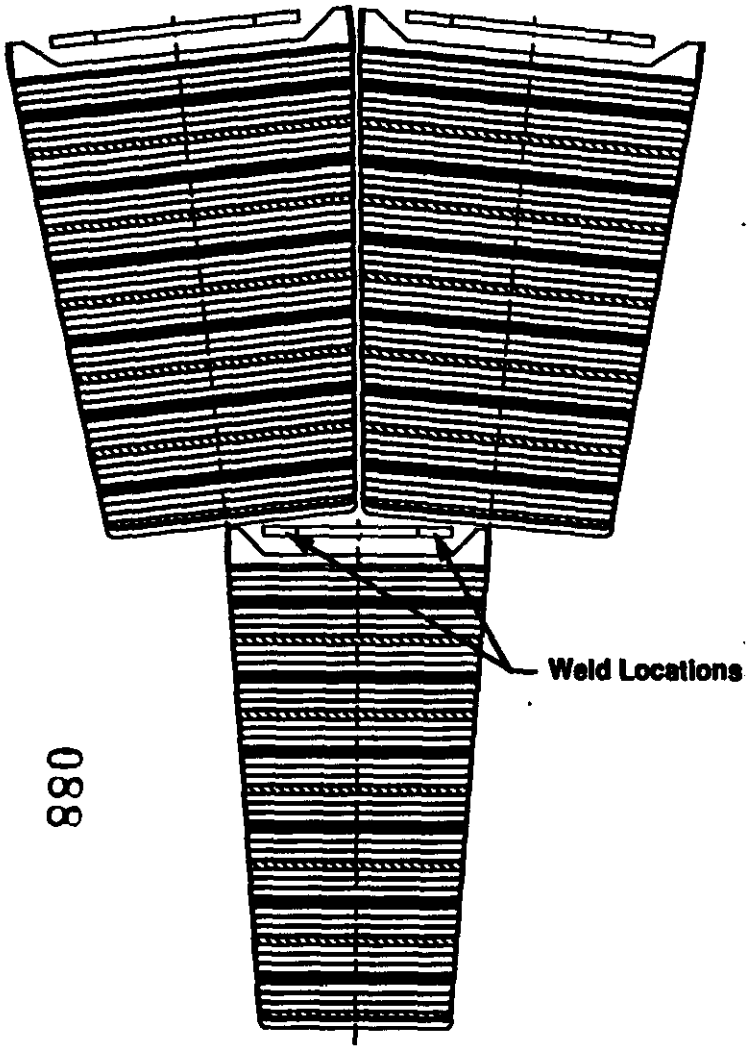

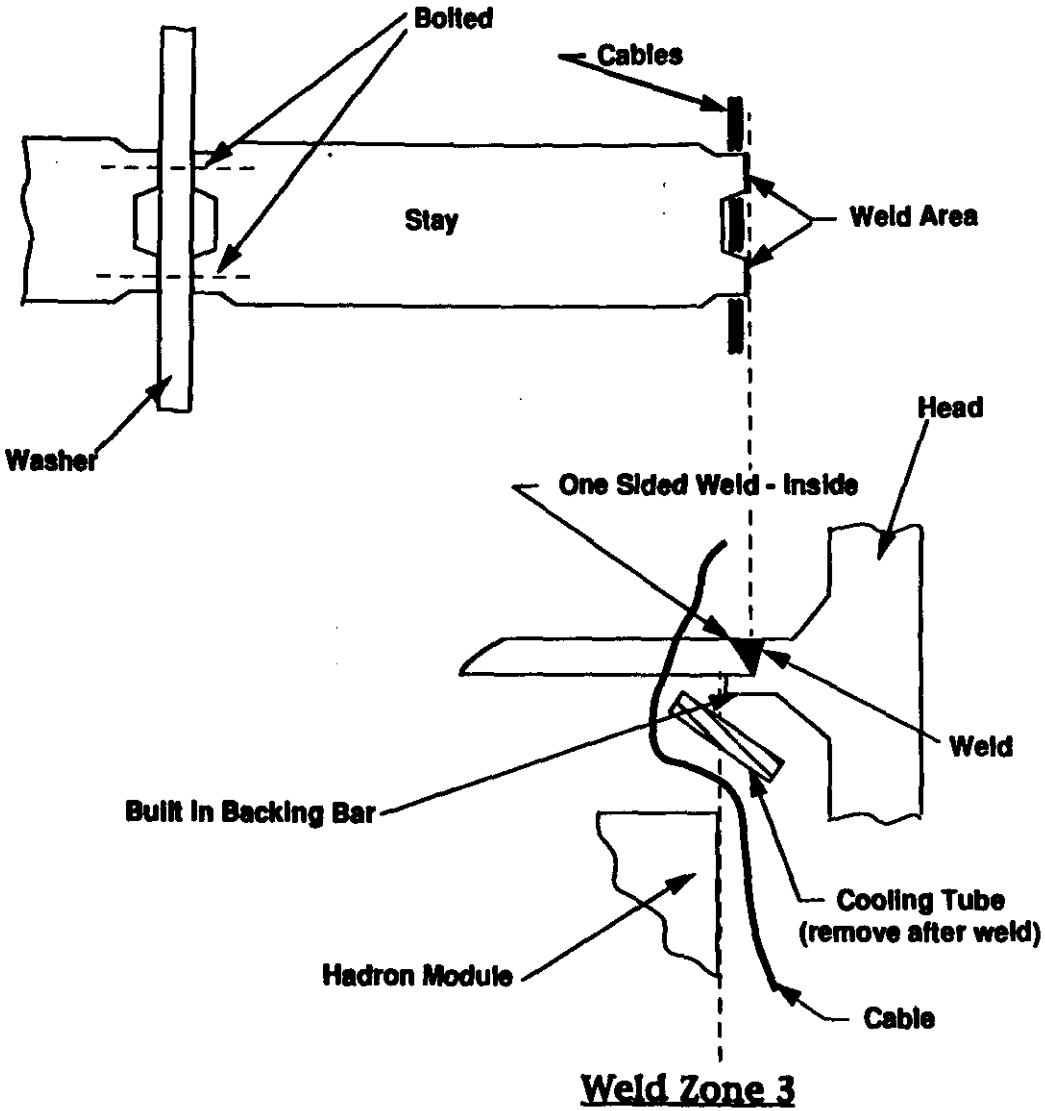

Figure 5-2 Solid Plate(Baseline) Hadron Module Stay Concept

KRBarnstable Module Supt Endview

088

Note: See Figure 5-6 for Weld Zone Locations on Calorimeter

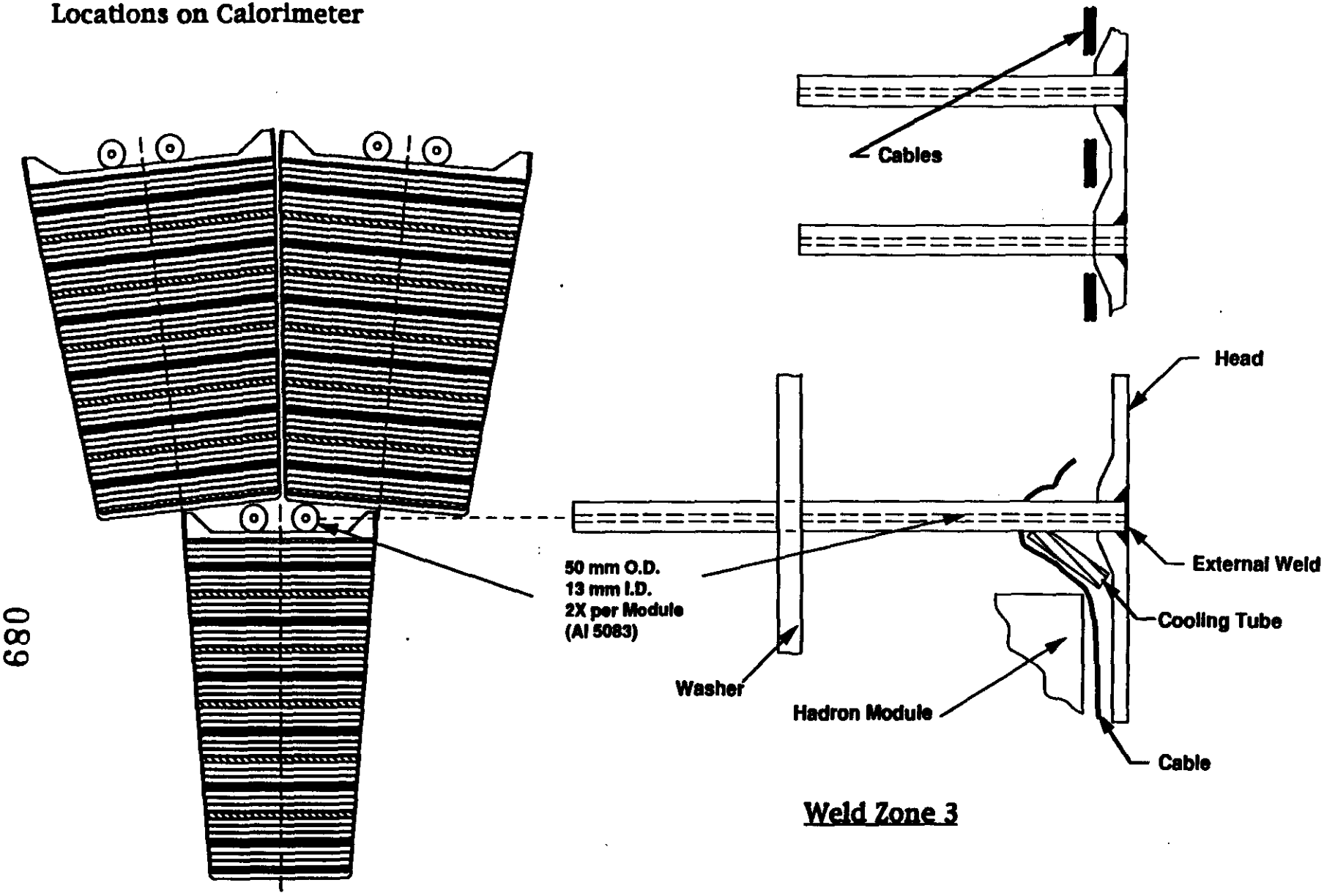

Figure 5-3 Cooling Tube Hadron Module Stay Concept

KRBarnstable Module Supt Endview

Note: See Figure 5-6 for Weld Zone Locations on Calorimeter

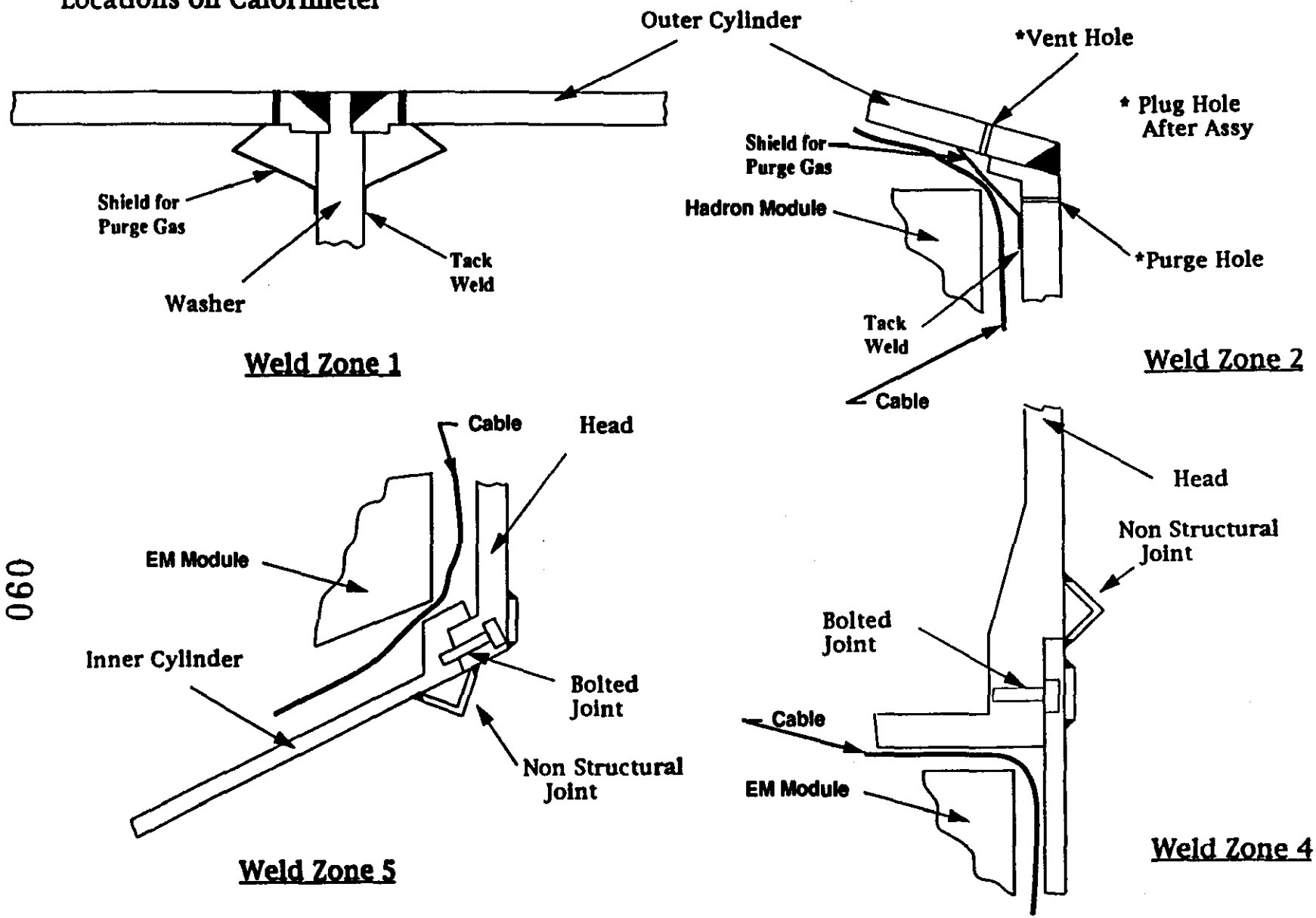

Figure 5-4 Weld Joints Shielded & Purged During Assembly of Barrel EM Calorimeter

KRBarnstable Module Supt Endview

Note: See Figure 5-6 for Weld Zone Locations on Calorimeter

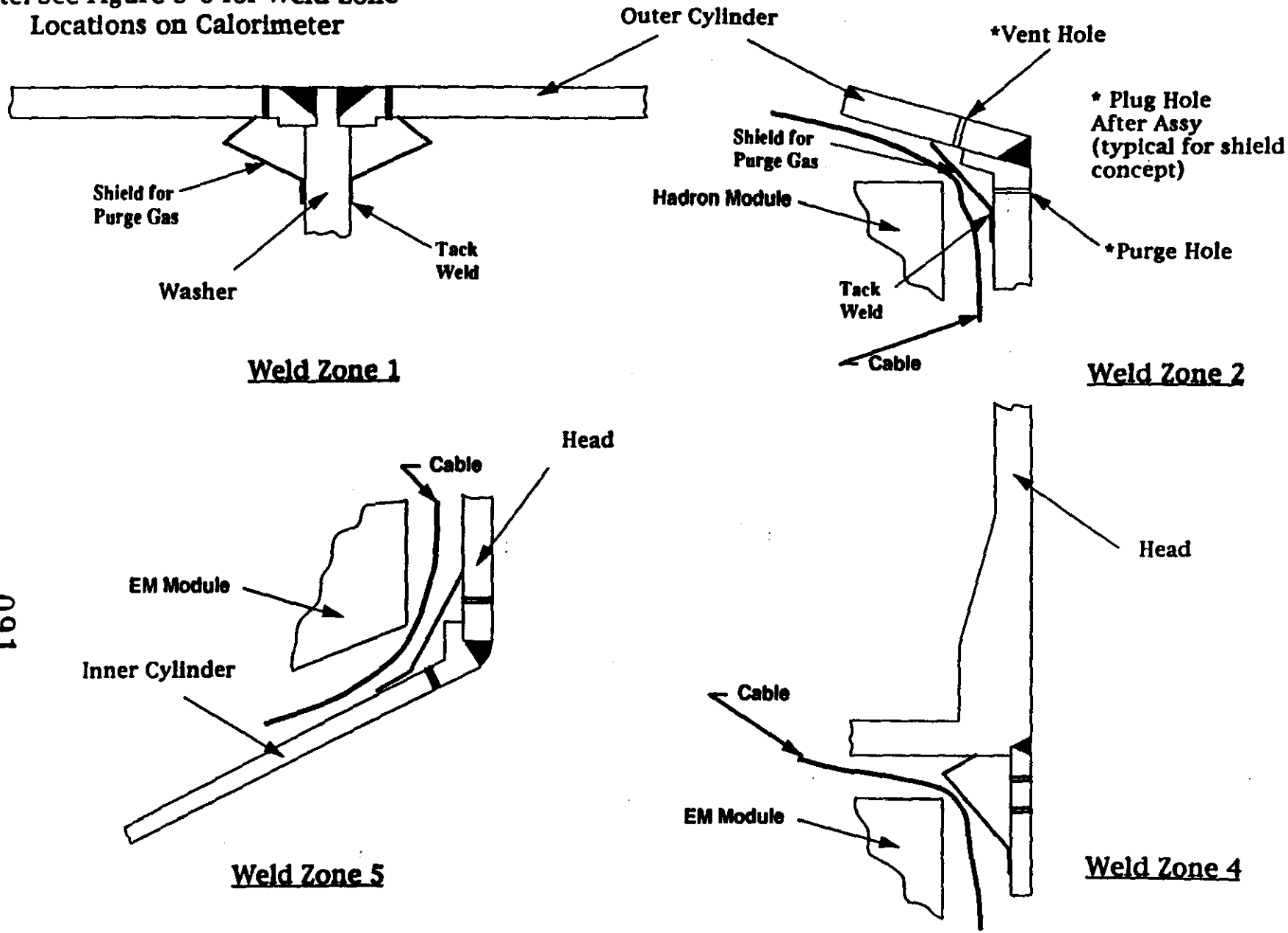

Figure 5-5 Weld Joints(Baseline) Shielded & Purged During Assembly of Barrel EM Calorimeter

KRBarnstable Module Supt Endview

Notes: All Dimensions in mm
See Figures 5-4 & 5-5 for Detail of Weld Zones

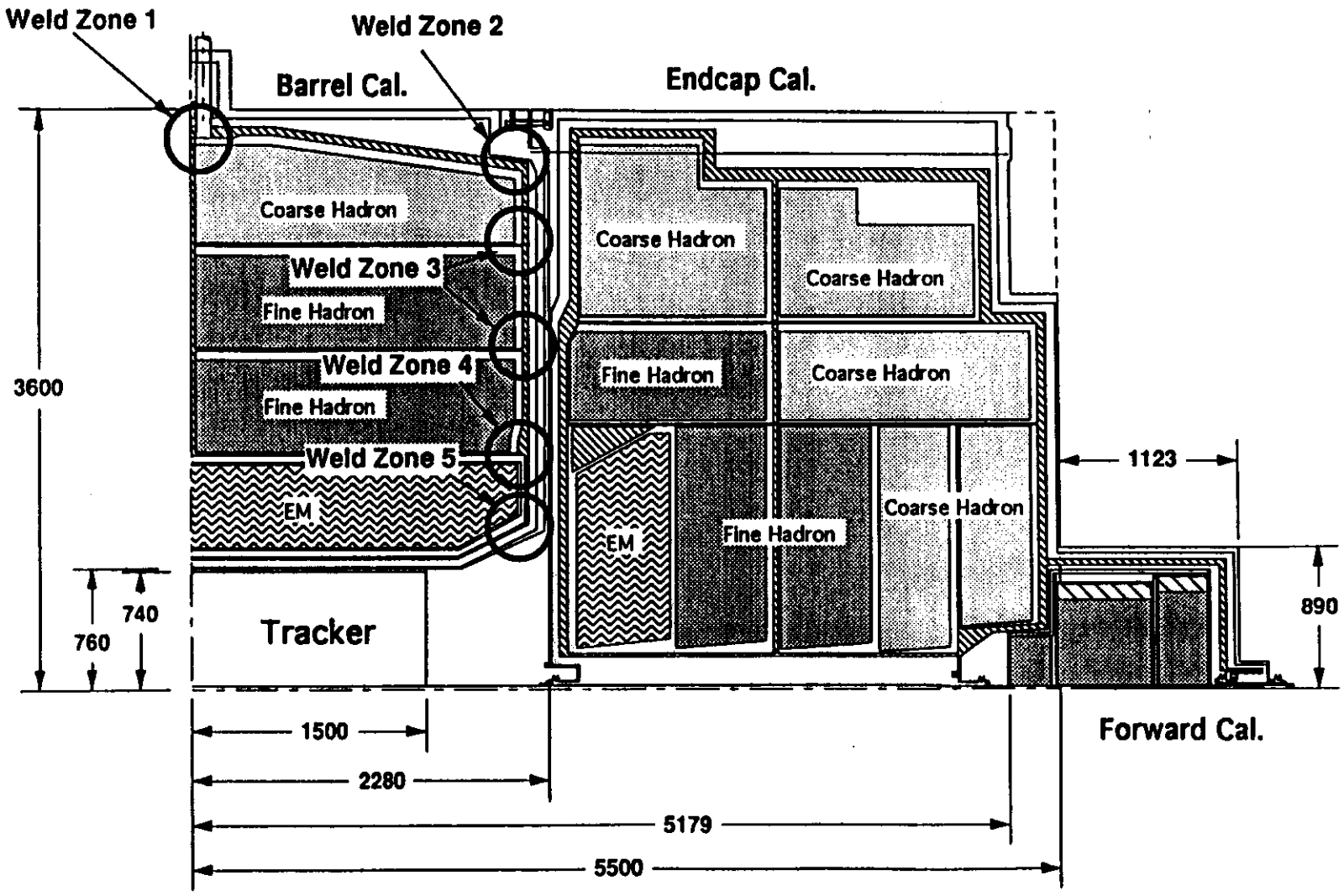

Figure 5-6. Reference Calorimeter Configuration

Calorimeter Engineering Question

6. Integrated Liquid Argon Installation/Testing

Request: Provide an outline of the testing of the liquid argon calorimeter prior to and after installation in the experimental hall.

Specific Concerns:

- *Surface testing of the three completed cryostat assemblies will require substantial time, material and manpower.*
- *Surface testing will have to be repeated in the experimental hall due to the transport and handling required between the assembly areas and the final positioning of the detector.*
- *If final testing is only performed in the experimental hall the cost and schedule risk will be unacceptable.*

Answer:

- *First we plan to test representative modules in the test beam at the SSCL. Some of these modules, such as an endcap EM monolith, will be the actual module that will be used in the experiment. This testing will give us the experience to cope with the installation in the experimental hall.*

  We outlined above the electrical tests envisaged at every step of the assembly and installation. In addition we plan to do a cold test of the completed calorimeter upstairs in the assembly hall. This would involve vacuum and liquid nitrogen services. We would probably not need to fill with argon, but might plan for this as well. The cost of providing these services to the assembly hall are also not very large.

Calorimeter Engineering Question

7. Calorimeter Cost and Schedules

Request: Provide the following information for the three calorimeter options (Integrated Liquid Argon, Scintillator and Hybrid):

- Engineering Cost and Duration,
- Fabrication Cost and Duration,
- Assembly Cost and Duration,
- Installation Cost and Duration,
- Overall Cost Estimates,
- Total Schedules,
- Tabulations of Labor Loading at SSCL,
- Physics Parameters.

LAC Cost Comparisons

Summary - Integrated Liquid Argon (Construction Only)

	Cost ($K)	Duration	
		From	To
Engineering	10,490	4th Q '92	3rd Q '96
Fabrication	36,981	3rd Q '93	4th Q '95
Assembly	16,588	2nd Q '94	2nd Q '97
Installation	806	3rd Q '97	2nd Q '99
Overall Cost*	89,511	4th Q'92	2nd Q '99

Summary - EM Only (Construction Only)

	Cost ($K)	Duration	
		From	To
Engineering	4,765	4th Q '92	3rd Q '96
Fabrication	16,381	1st Q '94	2nd Q '95
Assembly	4,038	3rd Q '94	2nd Q '97
Installation	240	3rd Q '97	2nd Q '99
Overall Cost*	36,790	4th Q'92	2nd Q '99

** Includes Engr/Design, M&S, Inspec/Admin, Proc/Fab, Assy, Instl, and Contingency*

Please see following pages for additional detail

This shows a summary and cost comparison of the Integrated Liquid Argon and the EM only calorimeters.

Liquid Argon Calorimeter Summary WBS

	Engr/ Design ($k)	M&S ($k)	Inspec/ Admin ($k)	Proc/ Fab ($k)	Assy ($k)	Instl ($k)	Cont. ($k)	WBS Total ($k)
LAr Calorimeter:	12,694	1,305	4,404	41,048	18,413	895	21,872	100,632
Research & Devel.	1,154	124	436	4,068	1,825	89	2,151	9,846
Concep./Prelim. Design	1,051	53	0	0	0	0	171	1,274
Construction	10,490	1,128	3,968	36,981	16,588	806	19,551	89,511
Modules	2,963	148	2,264	19,573	11,726	0	11,312	47,986
Barrel EM	217	11	260	4,593	1,348	0	2,970	9,399
Barrel Hadronic	679	34	729	5,162	3,773	0	2,553	12,930
Endcap EM	217	11	106	3,350	550	0	1,977	6,210
Endcap Hadronic	1,850	93	1,169	6,468	6,055	0	3,812	19,448
Cryostat	1,339	67	76	2,835	484	0	1,756	6,557
Barrel Argon Vessel	296	15	9	249	57	0	163	791
Barrel Vacuum Vessel	64	3	6	95	42	0	47	257
Endcap Argon Vessel	334	17	10	236	58	0	165	818
Endcap Vacuum Vessel	115	6	9	104	55	0	70	358
Supports	34	2	3	252	17	0	76	384
Feedthrus	494	25	39	1,899	257	0	1,235	3,949
Calorimeter Assy.	2,282	114	391	2,133	1,543	0	1,659	8,122
Tooling/Fixtures	1,261	63	39	3,805	145	0	1,437	6,751
Stacking Fixtures	217	11	0	878	0	0	286	1,392
Cryostat Assy Fixtures	341	17	0	1,150	0	0	392	1,900
Lifting Fixtures	165	8	0	418	0	0	154	746
Shipping Crates	54	3	0	472	0	0	137	665
Module Installation Fixture	97	5	0	209	0	0	87	398
Hadronic Fixture	76	4	0	157	0	0	66	302
Cooling Tube Layout Tool	78	4	0	105	0	0	45	231
EM Accordion Fixture	233	12	39	418	145	0	271	1,117
Test Equipment	33	2	6	470	22	0	128	661
Transportation	90	5	0	429	0	0	93	617
Cryogenic System	306	15	96	2,498	377	0	724	4,017
Equipment (above ground)	95	5	0	1,341	0	0	317	1,758
Test Beam Program	0	0	0	3,829	0	0	996	4,825
Installation/Test	288	14	50	67	0	708	293	1,421
Subsys. Mgt. & Integr.	1,831	695	1,046	0	2,291	98	835	6,797

The cost summary for the Liquid Argon Calorimeter is shown based on that effort to be authorized by contract and as defined by various Work Breakdown Structure (WBS) elements. The WBS represents the end product in the form of a family tree. This family tree is composed of hardware, services, and data that result from the engineering development phase and continues to follow the hardware through the production phase of the program. The indentured format defines the major elements and their associated subordinate elements.

GEM LAC MANPOWER REQUIREMENTS

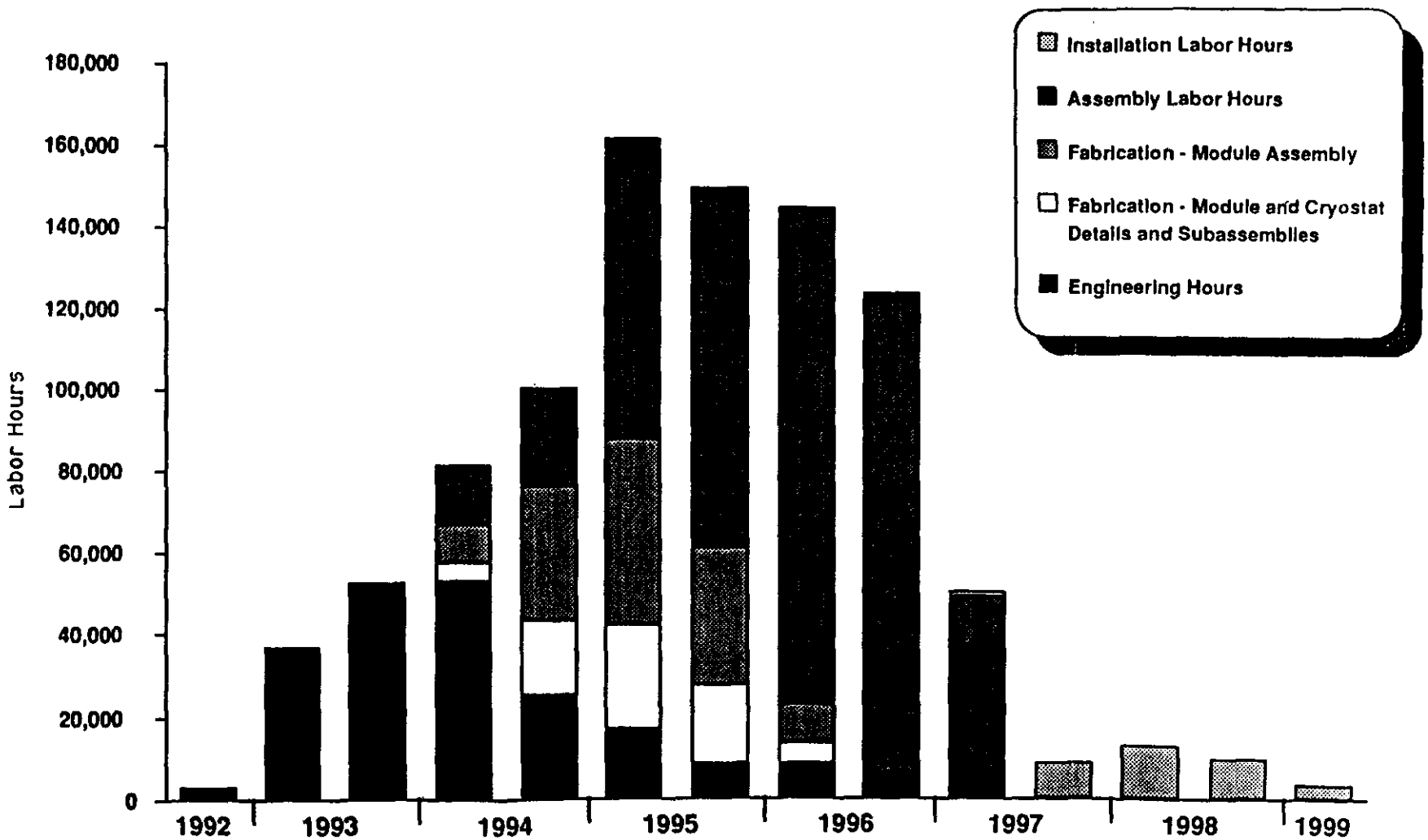

This defines the manpower necessary for all the disciplines required during the length of the program.

Engineering Hours

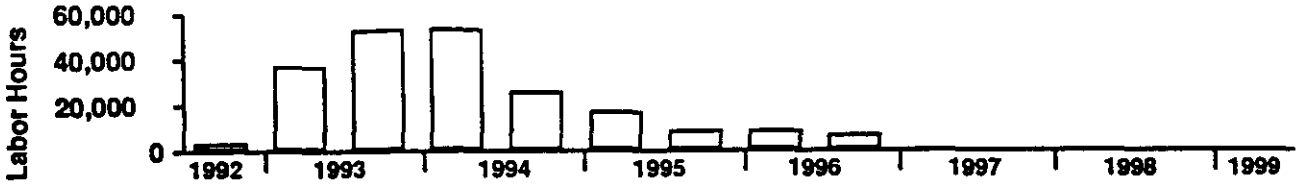

Fabrication - Material ($K)

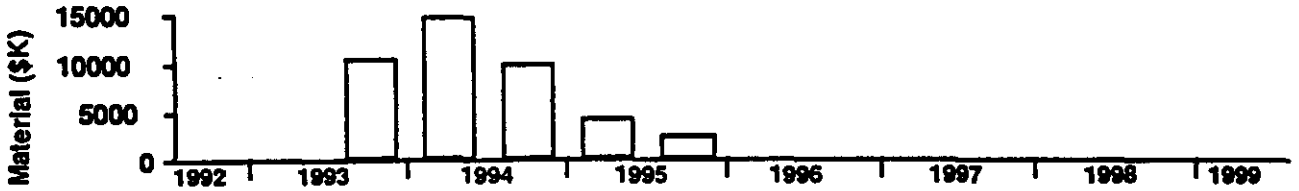

Fabrication - Module and Cryostat Details and Subassemblies

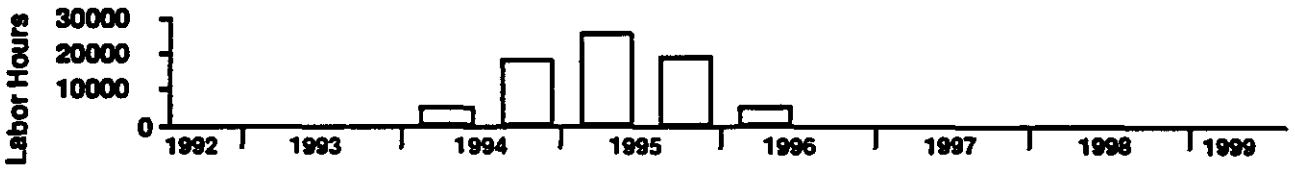

Fabrication - Module Assembly

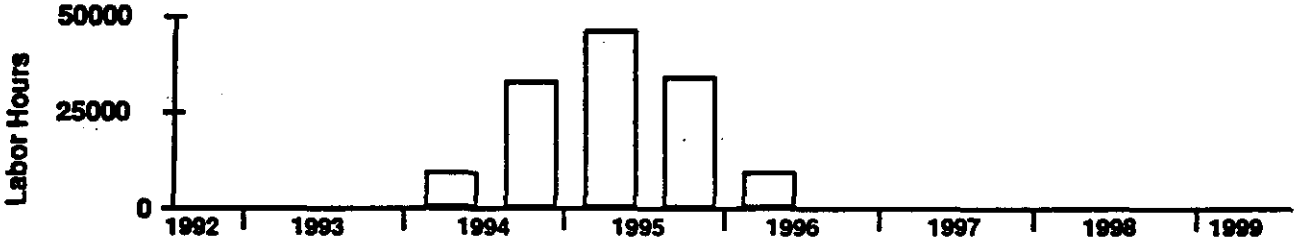

Assembly Labor Hours

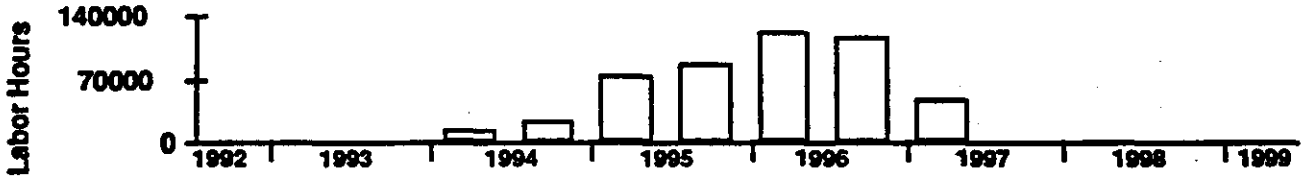

Installation Labor Hours

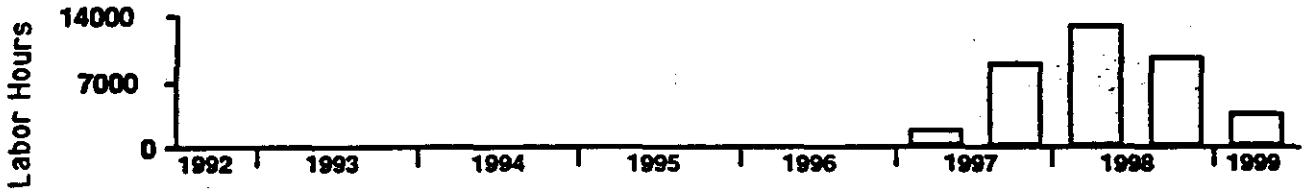

This defines the total labor and material costs by year.

	Engineering Hours	Fabrication material $K	Fabrication Module & Cryo. Subassemblies	Fabrication Module Assy	Assembly Hours	Installation Hours
2nd Half 1992	3,161					
1st Half 1993	36,881					
2nd Half 1993	52,686	$10,589				
1st Half 1994	52,686	$14,824	5,112	9,166	14,710	
2nd Half 1994	25,289	$10,165	18,257	32,734	24,517	
1st Half 1995	16,860	$4,235	25,560	45,828	73,550	
2nd Half 1995	8,430	$2,541	18,987	34,044	88,261	
1st Half 1996	8,430		5,112	9,166	122,584	
2nd Half 1996	6,322				117,681	
1st Half 1997					49,034	1,874
2nd Half 1997						8,997
1st Half 1998						13,121
2nd Half 1998						9,747
1st Half 1999						3,749
	210,746	$42,354	73,028	130,937	490,336	37,489

This shows the labor hours and material dollar amounts shown in the previous bar chart.

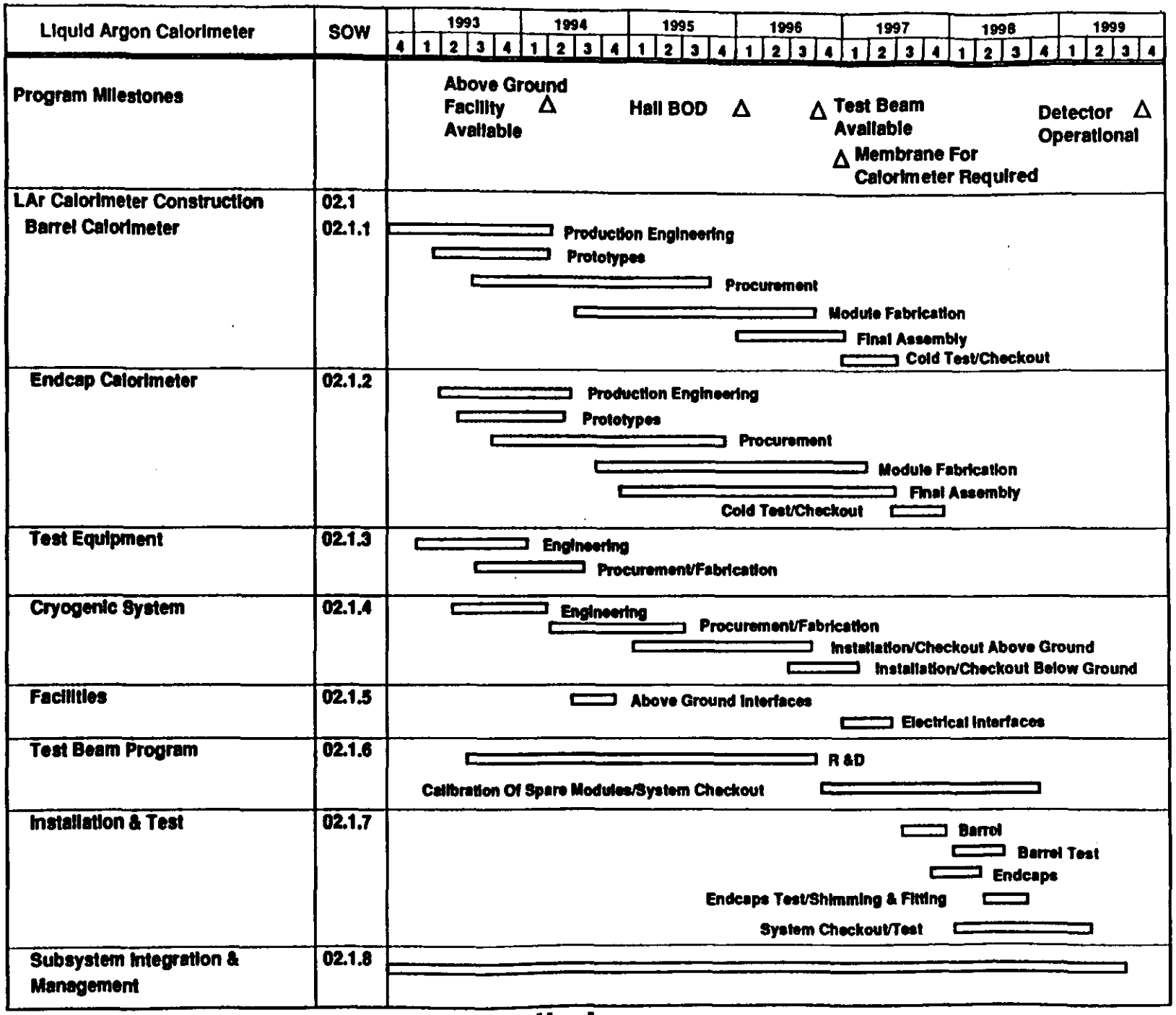

Preliminary

This shows the preliminary schedule for the Liquid Argon Calorimeter

GEM LAC EM ONLY

	Engr/ Design ($k)	M&S ($k)	Inspec/ Admin ($k)	Proc/ Fab ($k)	Assy ($k)	Instl ($k)	Cont. ($k)	WBS Total ($k)
LAr Calorimeter:	6,362	666	1,111	18,183	4,482	266	10,840	42,112
Research & Devel.	546	61	110	1,802	444	26	1,057	4,047
Concep./Prelim. Design	1,051	53	0	0	0	0	171	1,274
Construction	4,765	552	1,001	16,381	4,038	240	9,612	36,790
Modules	433	22	473	7,845	2,449	0	5,176	16,399
Barrel EM	217	11	322	3,784	1,667	0	2,743	8,742
Barrel Hadronic	0	0	0	0	0	0	0	0
Endcap EM	217	11	151	4,062	783	0	2,434	7,657
Endcap Hadronic	0	0	0	0	0	0	0	0
Cryostat	785	39	55	1,510	256	0	990	3,635
Barrel Krypton Vessel	148	7	9	78	32	0	71	345
Barrel Vacuum Vessel	102	5	1	25	3	0	30	166
Endcap Krypton Vessel	123	6	7	106	35	0	71	348
Endcap Vacuum Vessel	115	6	1	71	2	0	44	238
Supports	21	1	3	89	13	0	31	158
Feedthrus	275	14	35	1,141	171	0	743	2,380
Calorimeter Assy.	964	48	58	37	229	0	340	1,676
Tooling/Fixtures	1,017	61	22	1,966	145	0	936	4,350
Stacking Fixtures	163	11	0	470	0	0	180	878
Cryostat Assy Fixtures	282	19	0	261	0	0	171	827
Lifting Fixtures	124	8	0	118	0	0	75	367
Shipping Crates	41	3	0	490	0	0	141	688
Module Installation Fixture	97	5	0	105	0	0	58	264
Hadronic Fixture	0	0	0	0	0	0	0	0
Cooling Tube Layout Tool	78	4	0	105	0	0	45	231
EM Accordion Fixture	233	12	22	418	145	0	265	1,095
Test Equipment	33	2	6	387	16	0	106	550
Transportation	61	3	0	41	0	0	18	124
Cryogenic System	306	15	96	2,499	377	0	1,120	4,413
Equipment (above ground)	33	2	0	913	0	0	209	1,157
Test Beam Program	0	0	0	1,149	0	0	299	1,447
Installation/Test	144	7	18	34	0	214	108	524
Subsys. Mgt. & Integr.	988	353	274	0	565	26	309	2,515

Add $9.42 M for Krypton (21,560 liters @ $437/liter)

This cost summary reflects the EM only configuration costs. The elements for costing are the same as those previously shown for the baseline configuration.

GEM LAC EM ONLY

SUMMARY WBS

		Engineering/design			M&S	Inspection/Admin			Proc/Fab	Assembly				
		Labor	Rate	Total	Matl.	Labor	Rate	Total	Material	Labor	Rate	Subtotal	Matl.	Total
WBS no.		my	k$/my	k$	k$	my	k$/my	k$	k$	my	k$/my	k$	k$	k$
02.1.2.4	End Calorimeter Assembly/Test/Checkout	3.9	127.49	376	19	0.4	47.81	19	0	1.6	47.18	74		74
02.1.2.5	Transportation	0.4	127.49	45	2	0.0	66.84	0	21	0.0	47.18	0		0
02.1.3	Test Equipment	0.3	127.49	33	2	0.1	66.84	6	387	0.3	62.27	16		16
02.1.4	Cryogenic System	2.4	127.49	306	15	2.0	47.81	96	2,499	8.0	47.18	377		377
02.1.4.1	Local Argon Storage LN Systems			0				0	467			0		0
02.1.4.2	LN Source System at Surface			0				0	136			0		0
02.1.4.3	LN Conditioning Systems			0				0	61			0		0
02.1.4.4	Argon Dewar Fill and Distribution System			0				0	55			0		0
02.1.4.5	Argon Dewar to Argon Conditioner System			0				0	104			0		0
02.1.4.6	Argon Conditioner System			0				0	190			0		0
02.1.4.7	Module Cooling System			0				0	163			0		0
02.1.4.8	Argon Boiler			0				0	125			0		0
02.1.4.9	LN Boiler			0				0	178			0		0
02.1.4.10	Argon Supply Storage Dewars			0				0	112			0		0
02.1.4.11	Vacuum System			0				0	296			0		0
02.1.4.12	Argon Pump and Purge System			0				0	350			0		0
02.1.4.13	Installation			0				0	262			0		0
02.1.5	Facilities	0.3	127.49	33	2	0.0		0	913	0.0		0		0
02.1.6	Test Beam Program			0				0	1,149			0		0
02.1.6.1	Cryostat		127.49	0	0			0	210			0		0
02.1.6.2	Modules		127.49	0	0			0	618			0		0
02.1.6.3	Electronics		127.49	0	0			0	123			0		0
02.1.6.4	Fixtures		127.49	0	0			0	132			0		0
02.1.6.5	Test Labor		127.49	0	0			0	66			0		0
02.1.7	Installation & Test	1.1	127.49	144	7	0.4	47.81	18	34					
22.1.8	Electronics								0					
02.1.9	Subsystem Management & Integration	7.7		988	353	2.3		274	0	4.8		565		565
02.1.9.1	Project Mgmt. and Admin.	2.8	127.49	351	18	0.8	118.91	98		2.9	118.91	343		343
02.1.9.2	Resource Management	1.0	127.49	132	7	0.3	118.91	37		0.9	118.91	103		103
02.1.9.3	ES&H	0.5	127.49	66	3	0.2	118.91	18		0.3	118.91	34		34
02.1.9.4	Quality Assurance	0.9	127.49	110	5	0.3	118.91	30		0.3	118.91	34		34
02.1.9.5	System Integration	2.6	127.49	329	16	0.8	118.91	91		0.4	118.91	51		51
02.1.9.6	Travel			0	304			0				0		0
12.1	Liquid Argon Calorimeter Research and Devel.	4.6		546	61	1.4		110	1,802	7	0	444		444
22.1	Liquid Argon Cal. Conceptual/Prelim. Design	8.2		1,051	53	0.0		0	0					
22.1.1	Trade Studies	6.0	127.49	770	38			0						
22.1.2	Design and Analysis approach	0.0	127.49	0	0			0						
22.1.3	Calorimeter Specifications	0.1	127.49	14	1			0						
22.1.4	Material and Mass Definitions	0.2	127.49	29	1			0						
22.1.5	Major Assembly Tooling	0.2	127.49	29	1			0						
22.1.6	Facility Requirements Definition	0.1	127.49	19	1			0						
22.1.7	Assembly Scenarios On-site	0.1	127.49	8	0			0						
22.1.8	Calorimeter Cost and Schedules	1.4	127.49	183	9			0						

These costs are based on the individual WBS elements for the GEM LAC EM only configuration.

GEM LAC EM ONLY

SUMMARY WBS

WBS no.		Installation Labor my	Installation Rate k$/my	Installation Subtotal k$	Installation Matl. k$	Installation Total k$	Total Labor k$	Total Material k$	Total Subtotal k$	Total Conting. k$	Total Total k$
02.1.2.4	End Calorimeter Assembly/Test/Checkout						469	19	488	117	605
02.1.2.5	Transportation						45	23	68	11	79
02.1.3	Test Equipment						55	388	444	106	550
02.1.4	Cryogenic System						779	2,514	3,293	1,120	4,413
02.1.4.1	Local Argon Storage LN Systems						0	467	467	103	570
02.1.4.2	LN Source System at Surface						0	136	136	30	166
02.1.4.3	LN Conditioning Systems						0	61	61	13	74
02.1.4.4	Argon Dewar Fill and Distribution System						0	55	55	12	67
02.1.4.5	Argon Dewar to Argon Conditioner System						0	104	104	23	127
02.1.4.6	Argon Conditioner System						0	190	190	42	232
02.1.4.7	Module Cooling System						0	163	163	36	199
02.1.4.8	Argon Boiler						0	125	125	28	153
02.1.4.9	LN Boiler						0	178	178	39	217
02.1.4.10	Argon Supply Storage Dewars						0	112	112	25	137
02.1.4.11	Vacuum System						0	296	296	65	361
02.1.4.12	Argon Pump and Purge System						0	350	350	77	427
02.1.4.13	Installation						0	262	262	58	320
02.1.5	Facilities						33	915	948	209	1,157
02.1.6	Test Beam Program						0	1,149	1,149	299	1,447
02.1.6.1	Cryostat						0	210	210	55	265
02.1.6.2	Modules						0	618	618	161	779
02.1.6.3	Electronics						0	123	123	32	155
02.1.6.4	Fixtures						0	132	132	34	166
02.1.6.5	Test Labor						0	66	66	17	83
02.1.7	Installation & Test	5.3	40.71	214		214	375	41	416	108	524
22.1.8	Electronics						0	0	0	0	0
02.1.9	Subsystem Management & Integration	0.4		26		26	1,853	353	2,206	309	2,515
02.1.9.1	Project Mgmt. and Admin.	0.3	59.83	16		16	807	18	825	115	940
02.1.9.2	Resource Management	0.1	59.83	5		5	276	7	282	40	322
02.1.9.3	ES&H	0.0	59.83	2		2	120	3	123	17	141
02.1.9.4	Quality Assurance	0.0	59.83	2		2	176	5	182	25	207
02.1.9.5	System Integration	0.0	59.83	2		2	474	16	491	69	560
02.1.9.6	Travel						0	304	304	43	346
12.1	Liquid Argon Calorimeter Research and Devel.	1		26	0	26	1,127	1,863	2,990	1,057	4,047
22.1	Liquid Argon Cal. Conceptual/Prelim. Design	0.0		0		0	1,051	53	1,103	171	1,274
22.1.1	Trade Studies			0		0	770	38	808	125	933
22.1.2	Design and Analysis approach			0		0	0	0	0	0	0
22.1.3	Calorimeter Specifications			0		0	14	1	15	2	17
22.1.4	Material and Mass Definitions			0		0	29	1	30	5	35
22.1.5	Major Assembly Tooling			0		0	29	1	30	5	35
22.1.6	Facility Requirements Definition			0		0	19	1	20	3	23
22.1.7	Assembly Scenarios On-site			0		0	8	0	8	1	10
22.1.8	Calorimeter Cost and Schedules			0		0	183	9	192	30	222

9/12/92 - 4:17 PM

GEM LAC EM ONLY

SUMMARY WBS

WBS no.		No.	Units	Unit Cost	Estimate Type	Risk factors Technical	Risk factors Cost	Risk factors Schedule	Risk percentages Technical	Risk percentages Cost	Risk percentages Schedule	Cont. %
02.1.2.4	End Calorimeter Assembly/Test/Checkout				BU	4	6	4	2%	2%	1%	24%
02.1.2.5	Transportation	10	Truckload	2100.00	SA	4	4	4	2%	1%	1%	16%
02.1.3	Test Equipment	system	1	450000.00	EO	4	6	4	2%	2%	1%	24%
02.1.4	Cryogenic System	system	1	4122000.00								34%
02.1.4.1	Local Argon Storage LN Systems				SA	6	4	2	2%	2%	1%	22%
02.1.4.2	LN Source System at Surface				SA	6	4	2	2%	2%	1%	22%
02.1.4.3	LN Conditioning Systems				SA	6	4	2	2%	2%	1%	22%
02.1.4.4	Argon Dewar Fill and Distribution System				SA	6	4	2	2%	2%	1%	22%
02.1.4.5	Argon Dewar to Argon Conditioner System				SA	6	4	2	2%	2%	1%	22%
02.1.4.6	Argon Conditioner System				SA	6	4	2	2%	2%	1%	22%
02.1.4.7	Module Cooling System				SA	6	4	2	2%	2%	1%	22%
02.1.4.8	Argon Boiler				SA	6	4	2	2%	2%	1%	22%
02.1.4.9	LN Boiler				SA	6	4	2	2%	2%	1%	22%
02.1.4.10	Argon Supply Storage Dewars				SA	6	4	2	2%	2%	1%	22%
02.1.4.11	Vacuum System				SA	6	4	2	2%	2%	1%	22%
02.1.4.12	Argon Pump and Purge System				SA	6	4	2	2%	2%	1%	22%
02.1.4.13	Installation				SA	6	4	2	2%	2%	1%	22%
02.1.5	Facilities	system	1	1283000.00	BU	6	4	2	2%	2%	1%	22%
02.1.6	Test Beam Program											26%
02.1.6.1	Cryostat	system	1	210.00	SA	6	6	2	2%	2%	1%	26%
02.1.6.2	Modules	system	1	618.00	SA	6	6	2	2%	2%	1%	26%
02.1.6.3	Electronics	system	1	122.70	SA	6	6	2	2%	2%	1%	26%
02.1.6.4	Fixtures	system	1	132.00	SA	6	6	2	2%	2%	1%	26%
02.1.6.5	Test Labor	system	1	66.00	SA	6	6	2	2%	2%	1%	26%
02.1.7	Installation & Test				EO	6	6	2	2%	2%	1%	26%
22.1.8	Electronics					6	6	2	2%	2%	1%	25%
02.1.9	Subsystem Management & Integration											14%
02.1.9.1	Project Mgmt. and Admin.				PS	4	4	2	2%	1%	1%	14%
02.1.9.2	Resource Management				PS	4	4	2	2%	1%	1%	14%
02.1.9.3	ES&H				PS	4	4	2	2%	1%	1%	14%
02.1.9.4	Quality Assurance				PS	4	4	2	2%	1%	1%	14%
02.1.9.5	System Integration				PS	4	4	2	2%	1%	1%	14%
02.1.9.6	Travel				PS	4	4	2	2%	1%	1%	14%
12.1	Liquid Argon Calorimeter Research and Devel.	system	1	1801.88	PS							
22.1	Liquid Argon Cal. Conceptual/Prelim. Design											
22.1.1	Trade Studies				BU	4	6	2	2%	1%	1%	16%
22.1.2	Design and Analysis approach				BU	4	6	2	2%	1%	1%	16%
22.1.3	Calorimeter Specifications				BU	4	6	2	2%	1%	1%	16%
22.1.4	Material and Mass Definitions				BU	4	6	2	2%	1%	1%	16%
22.1.5	Major Assembly Tooling				BU	4	6	2	2%	1%	1%	16%
22.1.6	Facility Requirements Definition				BU	4	6	2	2%	1%	1%	16%
22.1.7	Assembly Scenarios On-site				BU	4	6	2	2%	1%	1%	16%
22.1.8	Calorimeter Cost and Schedules				BU	4	6	2	2%	1%	1%	16%

OPEN PLAN (A)

Report: MUONBAR1
Project: GEMLAC
Time Now: 01JAN93
Date: 21JUL92
Time: 10:38:08
Page: 1

GEM Liquid Argon Calorimeter

Martin Marietta

ACTIVITY	01 JAN 93	01 JAN 94	01 JAN 95	01 JAN 96	01 JAN 97	01 JAN 98
	← Timenow					
2.1	Program Milestones					
02.1	LAr Calorimeter Construction					
2.1	Δ Start Final Design GEM LAC					
2.1	Δ S/LAr Calorimeter Construction					
2.1				C/LAr Calorimeter Construction Δ		
2.1.1	Barrel Calorimeter					
02.1.1	Barrel Calorimeter					
2.1.1	Δ S/Barrel Calorimeter					
2.1.1					C/Barrel Calorimeter Δ	
2.1.1.1	Modules					
02.1.1.1	Modules					
2.1.1.1	Δ S/Modules					
2.1.1.1				Δ C/Modules		
02.1.1.1.1	Accordion EM Section					
2.1.1.1.1	Δ S/Accordion EM Section					
2.1.1.1.1				Δ C/Accordion EM Section		
02.1.1.1.1.1	Module 1 (40)					
2.1.1.1.1.1	Δ S/Module 1 (40)					
2.1.1.1.1.1.1	Absorber Engineering					
2.1.1.1.1.1.2	G10 Boards Engineering					
2.1.1.1.1.1.3	Other Module Structure Engineering					
2.1.1.1.1.1.4	Module Assembly/Test Engineering					
2.1.1.1.1.1.1		Absorber Proc/Fab				
2.1.1.1.1.1.2			G10 Boards Proc/Fab			
2.1.1.1.1.1.3			Other Module Structure Proc/Fab			
2.1.1.1.1.1.4			Module Assembly/Test			
2.1.1.1.1.1				Δ C/Module 1 (40)		
02.1.1.1.2	Hadronic Section					
2.1.1.1.2	Δ S/Hadronic Section					
2.1.1.1.2				Δ C/Hadronic Section		

Legend
- ■ = In Progress
- ▨ = Planned
- ⊠ = Critical

Signatures
Prep: _____
Aprv: _____

OPEN PLAN (R)

Report: MUONBAR1
Project: GEMLAC
Time Now: 01JAN93
Date: 23JUL92
Time: 10:36:06
Page: 2

GEM Liquid Argon Calorimeter

Martin Marietta

ACTIVITY	01 JAN 93	01 JAN 94	01 JAN 95	01 JAN 96	01 JAN 97	01 JAN 98
	← Timenow					
02.1.1.1.2.1	*Module 2 (80)*					
2.1.1.1.2.1	Δ S/Module 2 (80)					
2.1.1.1.2.1.1	Absorber Engineering					
2.1.1.1.2.1.2	G10 Boards Engineering					
2.1.1.1.2.1.3	Other Module Structure Engineering					
2.1.1.1.2.1.4	Module Assembly/Test Engineering					
2.1.1.1.2.1.1		Absorber Proc/Fab				
2.1.1.1.2.1.2		G10 Boards Proc/Fab				
2.1.1.1.2.1.3		Other Module Structure Proc/Fab				
2.1.1.1.2.1.4			Module Assembly/Test			
2.1.1.1.2.1				Δ C/Module 2 (80)		
02.1.1.1.2.2	*Module 3 (80)*					
2.1.1.1.2.2	Δ S/Module 3 (80)					
2.1.1.1.2.2.1	Absorber Engineering					
2.1.1.1.2.2.2	G10 Boards Engineering					
2.1.1.1.2.2.3	Other Module Structure Engineering					
2.1.1.1.2.2.4	Module Assembly/Test Engineering					
2.1.1.1.2.2.1		Absorber Proc/Fab				
2.1.1.1.2.2.2		G10 Boards Proc/Fab				
2.1.1.1.2.2.3		Other Module Structure Proc/Fab				
2.1.1.1.2.2.4			Module Assembly/Test			
2.1.1.1.2.2				Δ C/Module 3 (80)		
02.1.1.1.2.3	*Module 4 (80)*					
2.1.1.1.2.3	Δ S/Module 4 (80)					
2.1.1.1.2.3.1	Absorber Engineering					
2.1.1.1.2.3.2	G10 Boards Engineering					
2.1.1.1.2.3.3	Other Module Structure Engineering					
2.1.1.1.2.3.4	Module Assembly/Test Engineering					
2.1.1.1.2.3.1		Absorber Proc/Fab				
2.1.1.1.2.3.2		G10 Boards Proc/Fab				
2.1.1.1.2.3.3		Other Module Structure Proc/Fab				
2.1.1.1.2.3.4			Module Assembly/Test			
2.1.1.1.2.3				Δ C/Module 4 (80)		
02.1.1.1.2.4	*Module 5 (80)*					
2.1.1.1.2.4	Δ S/Module 5 (80)					
2.1.1.1.2.4.1	Absorber Engineering					
2.1.1.1.2.4.2	G10 Boards Engineering					
2.1.1.1.2.4.3	Other Module Structure Engineering					

Legend
- In progress
- Planned
- Critical

Signatures
Prep: _____
Apry: _____

OPEN PLAN (R)
Report: MUONBAR1
Project: BEMLAC
Time Now: 01JAN93
Date: 23JUL92
Time: 10:38:08
Page: 3

GEM Liquid Argon Calorimeter

Martin Marietta

ACTIVITY	01 JAN 93	01 JAN 94	01 JAN 95	01 JAN 96	01 JAN 97	01 JAN 98
	← Timenow					
2.1.1.1.2.4.4		Module Assembly/Test Engineering				
2.1.1.1.2.4.1			Absorber Proc/Fab			
2.1.1.1.2.4.2			G10 Boards Proc/Fab			
2.1.1.1.2.4.3			Other Module Structure Proc/Fab			
2.1.1.1.2.4.4				Module Assembly/Test		
2.1.1.1.2.4				Δ C/Module 5 (80)		
2.1.1.2	*Cryostat Barrel Calorimeter*					
02 1.1.2	*Cryostat Barrel Calorimeter*					
2.1.1.2	Δ S/Cryostat Barrel Calorimeter					
2.1.1.2		C/Cryostat Barrel Calorimeter Δ				
02.1.1.2.1	*Argon Vessel*					
2.1.1.2.1	Δ S/Argon Vessel					
2.1.1.2.1.01	Outer Shell Engineering					
2.1.1.2.1.02	Center Shell (2) Engineering					
2.1.1.2.1.03	Center Washer Engineering					
2.1.1.2.1.04	Inner Shell Engineering					
2.1.1.2.1.05	Inner Shell Assembly Engineering					
2.1.1.2.1.06	Feedthru Interface Plate Engineering					
2.1.1.2.1.07	Cooling Coils Engineering					
2.1.1.2.1.08	Two-Phase N2 Preamp Cooling Circuits Eng					
2.1.1.2.1.09	Fill Ports (2) Engineering					
2.1.1.2.1.10	Drain Port Engineering					
2.1.1.2.1.11	Seal Weld Strips Engineering					
2.1.1.2.1.12	Argon Vessel Assembly Engineering					
2.1.1.2.1.01		Outer Shell Proc				
2.1.1.2.1.02		Center Shell (2) Proc/Fab				
2.1.1.2.1.03		Center Washer Proc/Fab				
2.1.1.2.1.04		Inner Shell Proc/Fab				
2.1.1.2.1.05		Inner Shell Assembly Proc/Fab				
2.1.1.2.1.06		Feedthru Interface Plate Proc/Fab				
2.1.1.2.1.07		Cooling Coils Proc/Fab				
2.1.1.2.1.08		Two-Phase N2 Preamp Cooling Circui				
2.1.1.2.1.09		Fill Ports (2) Proc/Fab				
2.1.1.2.1.10		Drain Port Proc/Fab				
2.1.1.2.1.11		Seal Weld Strips Proc/Fab				
2.1.1.2.1.12			Δ Argon Vessel Assembly			
2.1.1.2.1			Δ C/Argon Vessel			
02 1.1.2.2	*Vacuum Vessel*					
2.1.1.2.2	Δ S/Vacuum Vessel					

Legend
■-In progress
▨-Planned
□-Critical

Signatures
Prep: _____
Aprv: _____

OPEN PLAN (R)

Report: MUONBAR1
Project: GEMLAC
Time Now: 01JAN93
Date: 21JUL92
Time: 10:36:08
Page: 4

GEM Liquid Argon Calorimeter

Martin Marietta

ACTIVITY	01 JAN 93	01 JAN 94	01 JAN 95	01 JAN 96	01 JAN 97	01 JAN 98
	← Timenow					
2.1.1.2.2.1	Outer Shell Engineering					
2.1.1.2.2.2	Inner Shell Engineering					
2.1.1.2.2.3	Head (2) Engineering					
2.1.1.2.2.4	Supports Engineering					
2.1.1.2.2.5	Seal Weld Strips Engineering					
2.1.1.2.2.6	Vacuum Vessel Assembly Engineering					
2.1.1.2.2.1		Outer Shell Proc				
2.1.1.2.2.2		Inner Shell Proc				
2.1.1.2.2.3		Head (2) Proc/Fab				
2.1.1.2.2.4		Supports Proc/Fab				
2.1.1.2.2.5		Seal Weld Strips Proc/Fab				
2.1.1.2.2.6			Δ Vacuum Vessel Assembly			
2.1.1.2.2			Δ C/Vacuum Vessel			
02.1.1.2.3	*LAr Vessel Cold Mass Support Posts (4)*					
2.1.1.2.3	LAr Vesl Cold Mass Supt Posts (4) Eng					
2.1.1.2.3		LAr Vessel Cold Mass Support Posts (4)				
02.1.1.2.4	*Barrel Rail Support*					
2.1.1.2.4	Barrel Rail Support Engineering					
2.1.1.2.4		Barrel Rail Support Proc/Fab				
02 1.1.2.5	*Feedthrus*					
.1.1.2.5	Δ S/Feedthrus					
.1.1.2.5.1	Cold Feedthru Assembly Engineering					
.1.1.2.5.2	Conduction Heat Intercept (CHI) Engineer					
.1.1.2.5.3	Assembly Engineering					
.1.1.2.5.1		Cold Feedthru Assembly Proc/Fab				
.1.1.2.5.2		Conduction Heat Intercept (CHI) Proc/Fab				
1.1.2.5.3			Feedthru Assembly			
1.1.2.5			Δ C/Feedthrus			
1.1.3	*Tooling/Fixtures*					
02 1.1 3	*Tooling/Fixtures*					
.1.1.3.6	Δ Automated Welding Proc/Fab					
.1.1.3	Δ S/Tooling/Fixtures					
.1.1.3.1	Stacking Fixtures Engineering					
.1.1.3.2	Cryostat Assembly Fixtures Engineering					
.1.1.3.3	Lifting Fixtures Engineering					
.1.1.3.4	Shipping Crates Engineering					
.1.1.3.5	Module Installation Fixture Engineering					

Legend
■-In progress
▨-Planned
▨-Critical

Signatures
Prep: _____
Aprv: _____

OPEN PLAN (R)

Report: MUONBAR1
Project: GEMLAC
Time Now: 01JAN93
Date: 21JUL92
Time: 10:38:08
Page: 8

GEM Liquid Argon Calorimeter

Martin Marietta

ACTIVITY	01 JAN 93	01 JAN 94	01 JAN 95	01 JAN 96	01 JAN 97	01 JAN 98
	← Timenow					
2.1.1.3.8	Δ Automated Welding Engineering					
2.1.1.3.7	Plumbing Layout Tool Engineering					
2.1.1.3.1		Stacking Fixtures Proc/Fab				
2.1.1.3.2		Cryostat Assembly Fixtures Proc/Fab				
2.1.1.3.3		Lifting Fixtures Proc/Fab				
2.1.1.3.4		Shipping Crates Proc/Fab				
2.1.1.3.5		Module Installation Fixture Proc/Fab				
2.1.1.3.7		Plumbing Layout Tool Proc/Fab				
2.1.1.3			Δ C/Tooling/Fixtures			
2.1.1.4	Barrel Calorimeter Assembly/Test/Checkout					
02 1.1 4	Barrel Calorimeter Assembly/Test/Checkout					
2.1.1.4				IN LINE TEST		
2.1.1.4	S/Barrel Calorimeter Assembly/Test/CO			Δ		
2.1.1.4				Δ S/CENTRAL BARREL ASSY		
2.1.1.4	SET UP MANDREL&LOAD SPT TUBE					
2.1.1.4				Δ WASHERS/WALLS AVAILABLE		
2.1.1.4				INSTALL CAL MODULES		
2.1.1.4				INSTALL CABLE SUPPORT TOOL		
2.1.1.4				ROUTE CABLES		
2.1.1.4				INSTALL Ar OUTER SHELL		
2.1.1.4				MOVE TO CRADLE		
2.1.1.4				PRE-ALIGNMENT		
2.1.1.4			INSTALL IN OUTER VAC SHELL			
2.1.1.4			CYLINDRICAL SPT BEAMS PLACED			
2.1.1.4			INSTALL PINNED RADIAL LINKS			
2.1.1.4					ALIGNMENT	
2.1.1.4			WELD INNER VAC SHELL			
2.1.1.4			WELD ENDCAP VAC SHELLS			
2.1.1.4			INSTALL FEEDTHROUGHS			
2.1.1.4					FINAL TEST	
2.1.1.4			AVAIL FOR TRANSPORT TO HALL		Δ	
2.1.1.4				TRANSPORT TO HALL		
2.1.1.4				INSTALLATION		
2.1.1.4					SYSTEM CHECKOUT	
2.1.1.4			C/Barrel Calorimeter Assembly/Test/CO			Δ
2.1.1.5	Transportation					
02 1.1 5	Transportation					
2.1.1.5		Transportation Engineering				
2.1.1.5				Transportation		

Legend
- In progress
- Planned
- Critical

Signatures
Prep: _____
Appv: _____

OPEN PLAN (R)

Report: MUONBAR1
Project: GEMLAC
Time Now: 01JAN93
Date: 21JUL92
Time: 10:36:08

GEM Liquid Argon Calorimeter

Martin Marietta

ACTIVITY	01 JAN 93	01 JAN 94	01 JAN 95	01 JAN 96	01 JAN 97	01 JAN 98
	← Timenow					
2.1.2	Endcap Calorimeter					
02 1.2	Endcap Calorimeter (2)					
2.1.2	Δ S/Endcap Calorimeter (2)					
2.1.2				C/Endcap Calorimeter (2) Δ		
2.1.2.1	Modules					
02 1.2 1	Modules					
2.1.2.1	Δ S/Modules					
2.1.2.1				Δ C/Modules		
02 1.2.1.1	Accordion EM Section					
2.1.2.1.1	Δ S/Accordion EM Section					
2.1.2.1.1				Δ C/Accordion EM Section		
02 1.2.1.1.1	Module 6 (2)					
2.1.2.1.1.1	Δ S/Module 6 (2)					
2.1.2.1.1.1.1	Absorber Engineering					
2.1.2.1.1.1.2	G10 Boards Engineering					
2.1.2.1.1.1.3	Other Module Structure Engineering					
2.1.2.1.1.1.4	Module Assembly/Test Engineering					
2.1.2.1.1.1.1		Absorber Proc/Fab				
2.1.2.1.1.1.2		G10 Boards Proc/Fab				
2.1.2.1.1.1.3		Other Module Structure Proc/Fab				
2.1.2.1.1.1.4		Module Assembly/Test				
2.1.2.1.1.1				Δ C/Module 6 (2)		
02 1.2.1.2	Hadronic Section					
2.1.2.1.2	Δ S/Hadronic Section					
2.1.2.1.2				Δ Hadronic Section		
02 1.2.1.2.1	Module 7 (20)					
2.1.2.1.2.1	Δ S/Module 7 (20)					
2.1.2.1.2.1.1	Absorber Engineering					
2.1.2.1.2.1.2	G10 Boards Engineering					
2.1.2.1.2.1.3	Other Module Structure Engineering					
2.1.2.1.2.1.4	Module Assembly/Test Engineering					
2.1.2.1.2.1.1		Absorber Proc/Fab				
2.1.2.1.2.1.2		G10 Boards Proc/Fab				

Legend
- In progress
- Planned
- Critical

Signatures
Prep: _____
Aprv: _____

OPEN PLAN (R)

Report: MUONBAR1
Project: GEMLAC
Time Now: 01JAN93
Date: 21JUL92
Time: 10:38:08
Page: 7

GEM Liquid Argon Calorimeter

Martin Marietta

ACTIVITY	01 JAN 93	01 JAN 94	01 JAN 95	01 JAN 96	01 JAN 97	01 JAN 98
	← Timenow					
2.1.2.1.2.1.3			Other Module	Structure Proc/Fab		
2.1.2.1.2.1.4				Module Assembly/Test		
2.1.2.1.2.1				Δ C/Module 7 (20)		
02 1 2.1.2.2	*Module 8 (20)*					
2.1.2.1.2.2	Δ S/Module 8 (20)					
2.1.2.1.2.2.1	Absorber Engineering					
2.1.2.1.2.2.2	G10 Boards Engineering					
2.1.2.1.2.2.3	Other Module Structure Engineering					
2.1.2.1.2.2.4	Module Assembly/Test Engineering					
2.1 2.1.2.2.1		Absorber Proc/Fab				
2.1.2.1.2.2.2				G10 Boards Proc/Fab		
2.1.2.1.2.2.3			Other Module	Structure Proc/Fab		
2.1.2.1.2.2.4				Module Assembly/Test		
2.1.2.1.2.2				Δ C/Module 8 (20)		
02 1.2.1 2 3	*Module 9 (20)*					
2.1.2.1.2.3	Δ S/Module 9 (20)					
2.1.2.1.2.3.1	Absorber Engineering					
2.1.2.1.2.3.2	G10 Boards Engineering					
2.1.2.1.2.3.3	Other Module Structure Engineering					
2.1.2.1.2.3.4	Module Assembly/Test Engineering					
2.1.2.1.2.3.1		Absorber Proc/Fab				
2.1.2.1.2.3.2				G10 Boards Proc/Fab		
2.1.2.1.2.3.3			Other Module	Structure Proc/Fab		
2.1.2.1.2.3.4				Module Assembly/Test		
2.1.2.1.2.3				Δ C/Module 9 (20)		
02.1 2 1 2.4	*Module 10 (40)*					
2.1.2.1.2.4	Δ S/Module 10 (40)					
2.1.2.1.2.4.1	Absorber Engineering					
2.1.2.1.2.4.2	G10 Boards Engineering					
2.1.2.1.2.4.3	Other Module Structure Engineering					
2.1.2.1.2.4.4	Module Assembly/Test Engineering					
2.1.2.1.2.4.1		Absorber Proc/Fab				
2.1.2.1.2.4.2				G10 Boards Proc/Fab		
2.1.2.1.2.4.3			Other Module	Structure		
2.1.2.1.2.4.4				Module Assembly/Test		
2.1.2.1.2.4				Δ C/Module 10 (40)		
02 1.2.1.2.5	*Module 11 (40)*					
2.1.2.1.2.5	Δ S/Module 11 (40)					

111

Legend
■-In progress
▨-Planned
▨-Critical

Signatures
Prep: _____
Appv: _____

OPEN PLAN (R)

Report: MUONBAR1
Project: GEMLAC
Time Now: 01JAN93
Date: 21JUL93
Time: 10:38:06
Page: 0

GEM Liquid Argon Calorimeter

Martin Marietta

ACTIVITY	01 JAN 93	01 JAN 94	01 JAN 95	01 JAN 96	01 JAN 97	01 JAN 98
	← Timenow					
2.1.2.1.2.5.1	Absorber Engineering					
2.1.2.1.2.5.2	G10 Boards Engineering					
2.1.2.1.2.5.3	Other Module Structure Engineering					
2.1.2.1.2.5.4	Module Assembly/Test Engineering					
2.1.2.1.2.5.1		Absorber Proc/Fab				
2.1.2.1.2.5.2		G10 Boards Proc/Fab				
2.1.2.1.2.5.3		Other Module Structure Proc/Fab				
2.1.2.1.2.5.4		Module Assembly/Test				
2.1.2.1.2.5			C/Module 11 (40)			
02 1 2.1 2 6	*Module 12 (80)*					
2.1.2.1.2.6	S/Module 12 (80)					
2.1.2.1.2.6.1	Absorber Engineering					
2.1.2.1.2.6.2	G10 Boards Engineering					
2.1.2.1.2.6.3	Other Module Structure Engineering					
2.1.2.1.2.6.4	Module Assembly/Test Engineering					
2.1.2.1.2.6.1		Absorber Proc/Fab				
2.1.2.1.2.6.2		G10 Boards Proc/Fab				
2.1.2.1.2.6.3		Other Module Structure Proc/Fab				
2.1.2.1.2.6.4		Module Assembly/Test				
2.1.2.1.2.6			C/Module 12 (80)			
02 1 2 1 2 7	*Module 13 (40)*					
2.1.2.1.2.7	S/Module 13 (40)					
2.1.2.1.2.7.1	Absorber Engineering					
2.1.2.1.2.7.2	G10 Boards Engineering					
2.1.2.1.2.7.3	Other Module Structure Engineering					
2.1.2.1.2.7.4	Module Assembly/Test Engineering					
2.1.2.1.2.7.1		Absorber Proc/Fab				
2.1.2.1.2.7.2		G10 Boards Proc/Fab				
2.1.2.1.2.7.3		Other Module Structure Proc/Fab				
2.1.2.1.2.7.4		Module Assembly/Test				
2.1.2.1.2.7			C/Module 13 (40)			
02.1 2.1 2 8	*Module 14 (40)*					
2.1.2.1.2.8	S/Module 14 (40)					
2.1.2.1.2.8.1	Absorber Engineering					
2.1.2.1.2.8.2	G10 Boards Engineering					
2.1.2.1.2.8.3	Other Module Structure Engineering					
2.1.2.1.2.8.4	Module Assembly/Test Engineering					
2.1.2.1.2.8.1		Absorber Proc/Fab				
2.1.2.1.2.8.2		G10 Boards Proc/Fab				
2.1.2.1.2.8.3		Other Module Structure Proc/Fab				

Legend
- In progress
- Planned
- Critical

Signatures

Prep: _____

Appv: _____

OPEN PLAN (R)

Report: MUONBAR1
Project: BEMLAC
Time Now: 01JAN93
Date: 01JUL93
Time: 10:38:06
Page: 8

GEM Liquid Argon Calorimeter

Martin Marietta

ACTIVITY	01 JAN 93	01 JAN 94	01 JAN 95	01 JAN 96	01 JAN 97	01 JAN 98
	← Timenow					
2.1.2.1.2.8.4				Module Assembly/Test		
2.1.2.1.2.8				Δ C/Module 14 (40)		
2.1.2.2	Cryostat Endcap Calorimeter					
02.1.2.2	Cryostat Endcap Calorimeter					
2.1.2.2	Δ S/Cryostat Endcap Calorimeter					
2.1.2.2		C/Cryostat Endcap Calorimeter Δ				
02.1.2.2.1	Argon Vessel					
2.1.2.2.1.04	Inner Shell Proc					
2.1.2.2.1	Δ S/Argon Vessel					
2.1.2.2.1.01	Outer Shell Engineering					
2.1.2.2.1.02	Center Shell (2) Engineering					
2.1.2.2.1.03	Center Washer Engineering					
2.1.2.2.1.04	Inner Shell Engineering					
2.1.2.2.1.05	Inner Shell Assembly Engineering					
2.1.2.2.1.06	Feedthru Interface Plate Engineering					
2.1.2.2.1.07	Cooling Coils Engineering					
2.1.2.2.1.08	Two-Phased N2 Preamp Cooling Circ Eng					
2.1.2.2.1.09	Fill Ports (2) Engineering					
2.1.2.2.1.10	Drain Port Engineering					
2.1.2.2.1.11	Seal Weld Strips Engineering					
2.1.2.2.1.12	Argon Vessel Assembly Engineering					
2.1.2.2.1.01		Outer Shell Proc/Fab				
2.1.2.2.1.02		Center Shell (2) Proc/Fab				
2.1.2.2.1.03		Center Washer Proc/Fab				
2.1.2.2.1.05		Inner Shell Assembly Proc/Fab				
2.1.2.2.1.06		Feedthru Interface Plate Proc/Fab				
2.1.2.2.1.07		Cooling Coils Proc/Fab				
2.1.2.2.1.08			Two-Phased N2 Preamp Cooling Circ			
2.1.2.2.1.09		Fill Ports (2) Proc/Fab				
2.1.2.2.1.10		Drain Port Proc/Fab				
2.1.2.2.1.11		Seal Weld Strips Proc/Fab				
2.1.2.2.1.12			Δ Argon Vessel Assembly			
2.1.2.2.1			Δ C/Argon Vessel			
02.1.2.2.2	Vacuum Vessel					
2.1.2.2.2	Δ S/Vacuum Vessel					
2.1.2.2.2.1	Outer Shell Engineering					
2.1.2.2.2.2	Inner Shell Engineering					
2.1.2.2.2.3	Head (2) Engineering					
2.1.2.2.2.4	Supports Engineering					

Legend
- In progress
- Planned
- Critical

Signatures
Prep: _____
Aprv: _____

OPEN PLAN (R)

Report: MUONBAR1
Project: GEMLAC
Time Now: 01JAN93
Date: 01JUL92
Time: 10:38:08
Page: 10

GEM Liquid Argon Calorimeter

Martin Marietta

ACTIVITY	01 JAN 93	01 JAN 94	01 JAN 95	01 JAN 96	01 JAN 97	01 JAN 98
	← Timenow					
2.1.2.2.2.5		Seal Weld Strip Engineering				
2.1.2.2.2.6		Vacuum Vessel Assembly Engineering				
2.1.2.2.2.1		Outer Shell Proc				
2.1.2.2.2.2		Inner Shell Proc				
2.1.2.2.2.3		Head (2) Proc/Fab				
2.1.2.2.2.4		Supports Proc/Fab				
2.1.2.2.2.5		Seal Weld Strip Proc				
2.1.2.2.2.6				Δ Vacuum Vessel Assembly		
2.1.2.2.2				Δ C/Vacuum Vessel		
02 1 2.2.3	*LAr Vessel Cold Mass Support Posts (4)*					
2.1.2.2.3		LAr Vesl Cold Mass Supt Posts (4) Engine				
2.1.2.2.3		LAr Vesl Cold Mass Supt Posts (4) Proc/F				
02.1 2 2.4	*Endcap Rail Support*					
2.1.2.2.4		Endcap Rail Support Engineering				
2.1.2.2.4		Endcap Rail Support Proc/Fab				
02.1 2 2.5	*Feedthrus*					
2.1.2.2.5	Δ S/Feedthrus					
2.1.2.2.5.1		Cold Feedthru Assembly Engineering				
2.1 2.2.5.2		Conduction Heat Intercept (CHI) Engineer				
2.1.2.2.5.3		Assembly Engineering				
2.1.2.2.5.1			Cold Feedthru Assembly Proc/Fab			
2.1.2.2.5.2			Conduction Heat Intercept (CHI) Proc/Fab			
2.1.2.2.5.3				Feedthru Assembly		
2.1.2.2.5				Δ C/Feedthrus		
2 1 2.3	*Tooling/Fixtures*					
02 1.2 3	*Tooling/Fixtures*					
2.1.2.3	Δ S/Tooling/Fixtures					
2.1.2.3.1		Stacking Fixture Engineering				
2.1.2.3.2		Cryostat Assembly Fixture Engineering				
2.1.2.3.3		Lifting Fixture Engineering				
2.1.2.3.4		Shipping Crates Engineering				
2.1.2.3.5		EM Accordion Tool Engineering				
2.1.2.3.6		Plumbing Layout Tool Engineering				
2.1.2.3.1			Stacking Fixture Proc/Fab			
2.1.2.3.2			Cryostat Assembly Fixture Proc/Fab			
2.1.2.3.3			Lifting Fixture Proc/Fab			
2.1.2.3.4			Shipping Crates Proc/Fab			

Legend
- In progress
- Planned
- Critical

Signatures
Prep: _____
Aprv: _____

OPEN PLAN (R)

Report: MUONBAR1
Project: BEHLAC
Time Now: 01JAN93
Date: 31JUL92
Time: 10:38:08
Page: 11

GEM Liquid Argon Calorimeter

Martin Marietta

ACTIVITY	01 JAN 93	01 JAN 94	01 JAN 95	01 JAN 96	01 JAN 97	01 JAN 98
	← Timenow					
2.1.2.3.5				EM Accordion Tool Proc/Fab		
2.1.2.3.6				Plumbing Layout Tool Proc/Fab		
2.1.2.3				Δ C/Tooling/Fixtures		
2.1.2.4	End Calorimeter Assembly/Test/Checkout					
02 1.2.4	End Calorimeter Assembly/Test/Checkout					
2.1.2.4	S/End Calorimeter Assembly/Test/Checkout Δ					
2.1.2.4	C/End Calorimeter Assembly/Test/Checkout Δ					
02 1 2 4N	North Endcap Assembly					
2.1.2.4				IN LINE TEST		
2.1.2.4				Δ S/FIRST ENDCAP ASSY		
2.1.2.4				SET UP MANDREL		
2.1.2.4				BUILD Ar VESSEL SUBASSY		
2.1.2.4				WELD WASHER		
2.1.2.4			WELD FRWD HALF MID-CYLINDER			
2.1.2.4			WELD FLAT PROTION Ar HEADWALL			
2.1.2.4				WELD INNER CYLINDER		
2.1.2.4				WELD REAR Ar HEADWALL		
2.1.2.4			CALORIMETER MONOLITH ASSY			
2.1.2.4			INNER HADRONIC MODULES (2)			
2.1.2.4			FRWD MONOLITHIC EM RINGS (2)			
2.1.2.4			POSITION CABLE SUPPORT TOOL			
2.1.2.4			INSTAL MONOLITH VESSEL SUBASSY			
2.1.2.4			WELD MID-CYLINDER SEGMENTS			
2.1.2.4			MOUNT OUTER HADRONIC MODULES			
2.1.2.4			WELD Ar VESSEL OUTER SHELL			
2.1.2.4			WELD ELLIPTICAL HEAD			
2.1.2.4					SUPPORT ENDCAP	
2.1.2.4					REMOVE MANDREL	
2.1.2.4			MOUNT ON ROTATION INSERT TOOL			
2.1.2.4			POSITION INNER VAC ASSY			
2.1.2.4			POSITION REAR HEADWALL ASSY			
2.1.2.4			WELD OUTER VAC SHELL/ELLIP HD			
2.1.2.4			WELD TO REAR HEADWALL			
2.1.2.4			WELD STANCHION VAC JACKETS			
2.1.2.4				FINAL TEST		
2.1.2.4				TRANSPORT TO HALL		
2.1.2.4				AVAIL FOR TRANSPORT TO HALL Δ		
2.1.2.4					INSTALLATION	

Legend
- In progress
- Planned
- Critical

Signatures
Prep: _____
Aprv: _____

OPEN PLAN (R)

Report: MUONBAR1
Project: GEMLAC
Time Now: 01JAN93
Date: 01JUL92
Time: 10:38:08
Page: 12

GEM Liquid Argon Calorimeter

Martin Marietta

ACTIVITY	01 JAN 93	01 JAN 94	01 JAN 95	01 JAN 96	01 JAN 97	01 JAN 98
	← Timenow					
02 1.2.4S	South Endcap Assembly					
2.1.2.4						
2.1.2.4					SET UP MANDREL	
2.1.2.4				IN LINE TEST		
2.1.2.4					S/SECOND ENDCAP ASSY	
2.1.2.4					BUILD Ar VESSEL SUBASSY	
2.1.2.4					WELD WASHER	
2.1.2.4			WELD FRWD HALF MID-CYLINDER			
2.1.2.4			WELD FLAT PORTION ON Ar HEADWL			
2.1.2.4					WELD INNER CYLINDER	
2.1.2.4					WELD REAR Ar HEADWALL	
2.1.2.4			CALORIMETER MONOLITH ASSY			
2.1.2.4			INNER HADRONIC MODULES (2)			
2.1.2.4			FRWD MONOLITHIC EM RINGS (2)			
2.1.2.4			POSITION CABLE SUPPORT TOOL			
2.1.2.4			INSTALL MONOTITH ON VSL SUBASY			
2.1.2.4			WELD MID-CYLINDER SEGMENTS			
2.1.2.4			MOUNT OUTER HADRONIC MODULES			
2.1.2.4			WELD Ar VESSEL OUTER SHELL			
2.1.2.4			WELD ELLIPTICAL HEAD			
2.1.2.4					SUPPORT ENDCAP	
2.1.2.4					REMOVE MANDREL	
2.1.2.4			MOUNT ON ROTATION INSERT TOOL			
2.1.2.4			POSITION INNER VAC ASSY			
2.1.2.4			POSITION REAR HEADWALL ASSY			
2.1.2.4			WELD OUTER VAC/ELLIP HD HALFAS			
2.1.2.4			WELD TO REAR HEADWALL			
2.1.2.4			WELD STANCHION VAC JACKETS			
2.1.2.4				FINAL TEST		
2.1.2.4			AVAIL FOR TRANSPORT TO HALL			
2.1.2.4				TRANSPORT TO HALL		
2.1.2.4					INSTALLATION	
2.1.2.5	Transportation					
02 1.2.5	Transportation					
2.1.2.5		Transportation Engineering				
2.1.2.5			Transportation			
2.1.3	Test Equipment					
02 1.3	Test Equipment					
2.1.3		Test Equipment Engineering				

Legend
- In progress
- Planned
- Critical

Signatures
Prep: _____
Aprv: _____

OPEN PLAN (R)

Report: MUONBAR1
Project: GEMLAC
Time Now: 01JAN93
Date: 21JUL92
Time: 10:38:08
Page: 12

GEM Liquid Argon Calorimeter

Martin Marietta

ACTIVITY	01 JAN 93	01 JAN 94	01 JAN 95	01 JAN 96	01 JAN 97	01 JAN 98
	← Timenow					
2.1.3				Test Equipment Proc/Fab		
2.1.4	Cryogenic System					
02 1.4	Cryogenic System					
2.1.4	Δ S/Cryogenic System					
2.1.4.01	Local Argon Storage LN System Engineerin					
2.1.4.02	LN Source System At Surface Engineering					
2.1.4.03	LN Conditioning Systems Engineering					
2.1.4.04	Argon Dewar Fill and Dist System Eng					
2.1.4.05	Argon Dewar to Argon Condit System Eng					
2.1.4.06	Argon Conditioner System Engineering					
2.1.4.07	Module Cooling System Engineering					
2.1.4.08	Argon Boiler Engineering					
2.1.4.09	LN Boiler Engineering					
2.1.4.10	Argon Supply Storage Dewars Engineering					
2.1.4.11	Vacuum System Engineering					
2.1.4.12	Argon Pump and Purge System Engineering					
2.1.4.13	Installation Engineering					
2.1.4.01		Local Argon Storage LN System Proc/Fab				
2.1.4.02		LN Source System At Surface Proc/Fab				
2.1.4.03		LN Conditioning Systems Proc/Fab				
2.1.4.04			Argon Dewar Fill and Dist Sys Proc/Fab			
2.1.4.05		Argon Dewar to Argon Condit System Proc				
2.1.4.06		Argon Conditioner System Proc/Fab				
2.1.4.07		Module Cooling System Proc/Fab				
2.1.4.08			Argon Boiler Proc/Fab			
2.1.4.09			LN Boiler Proc/Fab			
2.1.4.10		Argon Supply Storage Dewars Proc/Fab				
2.1.4.11		Vacuum System Proc/Fab				
2.1.4.12		Argon Pump and Purge System Proc/Fab				
2.1.4.13	Cryo System Installation					
2.1.4				C/Cryogenic System Δ		
2.1.5	Facilities					
02 1.5	Facilities					
2.1.5		Facilities Engineering				
2.1.5				Facilities		

Legend
- In progress
- Planned
- Critical

Signatures
Prep: _____
Aprv: _____

OPEN PLAN (R)

Report: MUONBAR1
Project: GEMLAC
Time Now: 01JAN93
Date: 01JUL93
Time: 10:38:08
Page: 16

GEM Liquid Argon Calorimeter

Martin Marietta

ACTIVITY	01 JAN 93	01 JAN 94	01 JAN 95	01 JAN 96	01 JAN 97	01 JAN 98
	← Timenow					
2.1.6	*Test Beam Program*					
02.1.6	Test Beam Program					
2.1.6	Δ S/Test Beam Program					
2.1.6.1	Cryostat Engineering					
2.1.6.2	Modules Engineering					
2.1.6.3	Electronics Engineering					
2.1.6.4	Fixtures Engineering					
2.1.6.5	Test Labor Engineering					
2.1.6.1		Δ Cryostat Proc/Fab				
2.1.6.2		Δ Modules Proc/Fab				
2.1.6.3				Electronics Proc/Fab		
2.1.6.4		Fixtures Proc/Fab				
2.1.6.5		Test Labor				
2.1.6				Δ C/Test Beam Program		
2.1.7	*Installation & Test*					
02 1.7	*Installation & Test*					
2.1.7	Installation & Test Engineering					
2.1.7		Installation & Test Proc/Fab				
2.1.8	*Electronics*					
02 1.8	*Electronics*					
2.1.8	Electronics Engineering					
2.1.8				Electronics Proc/Fab		
2.1.9	*Subsystem Management & Integration*					
02.1.9	*Subsystem Management & Integration*					
2.1.9	Δ S/Subsystem Management & Integration					
2.1.9.1				Project Management and Admin		
2.1.9.2				Resource Management		
2.1.9.3				ES&H		
2.1.9.4				Quality Assurance		
2.1.9.5				System Integration		
2.1.9.6				Travel		
2.1.9			Subsystem Management & Integration Δ			

Legend
- In progress
- Planned
- Critical

Signatures
Prep: _____
Aprv: _____

Calorimeter Engineering Question

8. Integrated Calorimeter Assembly Fixturing

Request: Provide a listing of fabrication, assembly and installation fixturing, including sketches, required for the construction of the liquid argon integrated calorimeter. Designate fixturing which will be required for the EM only as well.

Specific Concern:
- *The fixturing is not explicitly referenced in the cost estimate.*

Answer:
- *All of the special and standard tools are considered in the cost input although at a relatively high level. Definition of the required fixturing is an integral part of the thought process while developing the assembly flows for the calorimeter. At each step in the assembly the equipment, fixtures, and tools are conceptualized. Operations are envisioned to be performed with standard tools and equipment whenever possible and special tool concepts are invented only when no existing tools are known to be available. During the manufacturing flow development phase the tool concepts are carried only to the level of function and basic construction (see attached sketches).*

EM MODULE - STRONGBACK HANDLING FIXTURE (40 REQ'D)

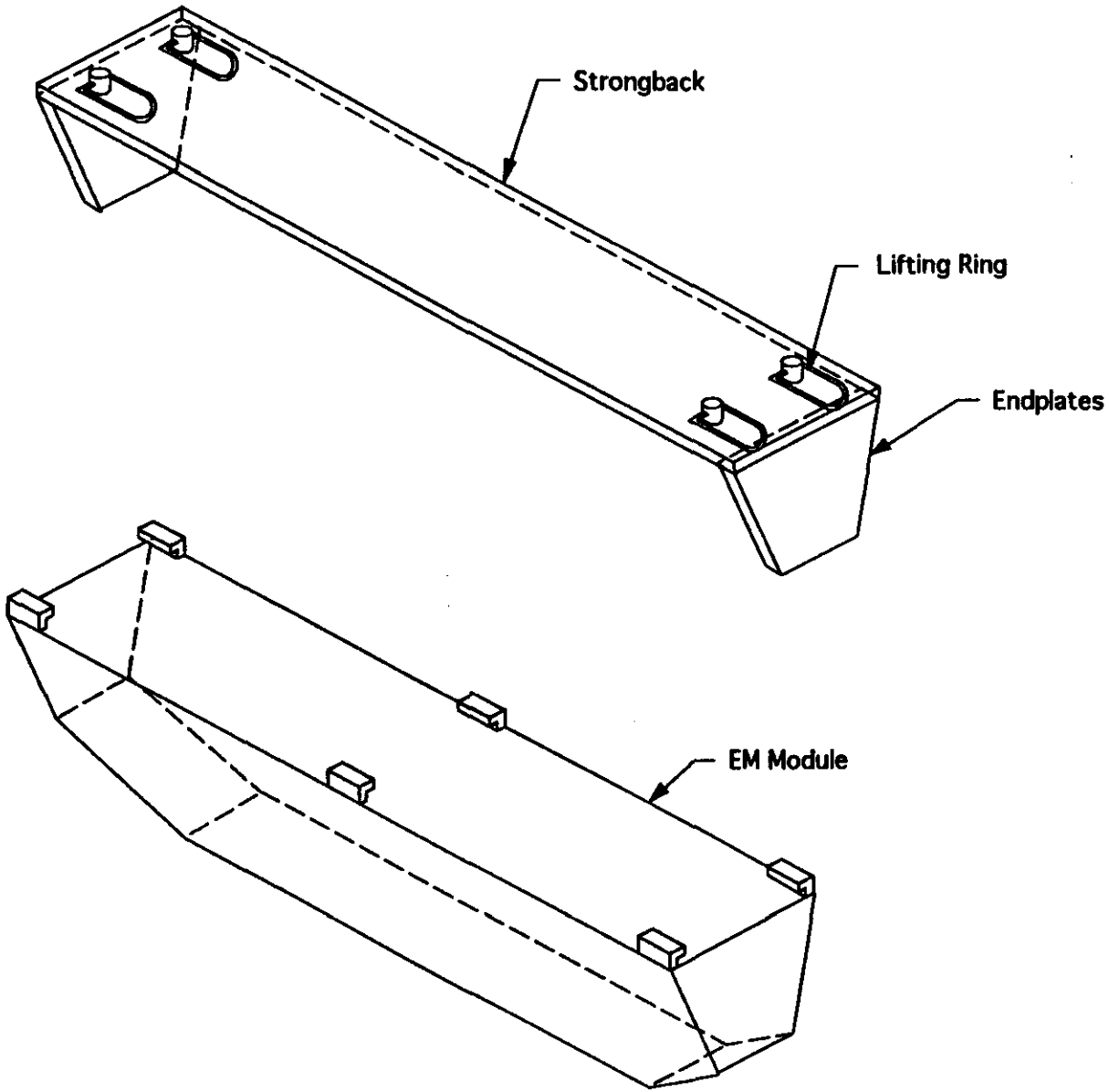

EM MODULE - CLAMSHELL ASSEMBLY TOOL (2REQ'D)

1. Remove endplates from EM strongback handling fixture.

2. Insert EM module and strongback into clamshell structure.

3. Strongback locates and pins to the EM clamshell tool for alignment.

4. EM module is shimmed as required and are tied to each other using clevis and tie rod ends.

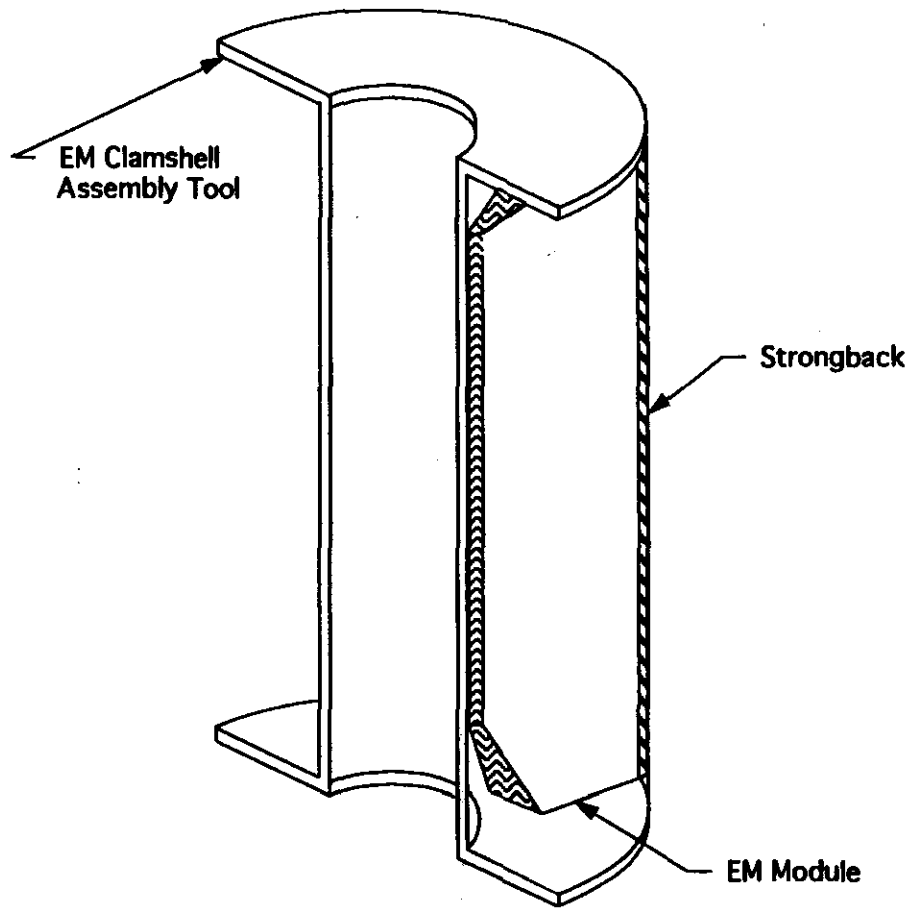

EM MODULE - EM ASSEMBLY AND BREAKOVER FIXTURE

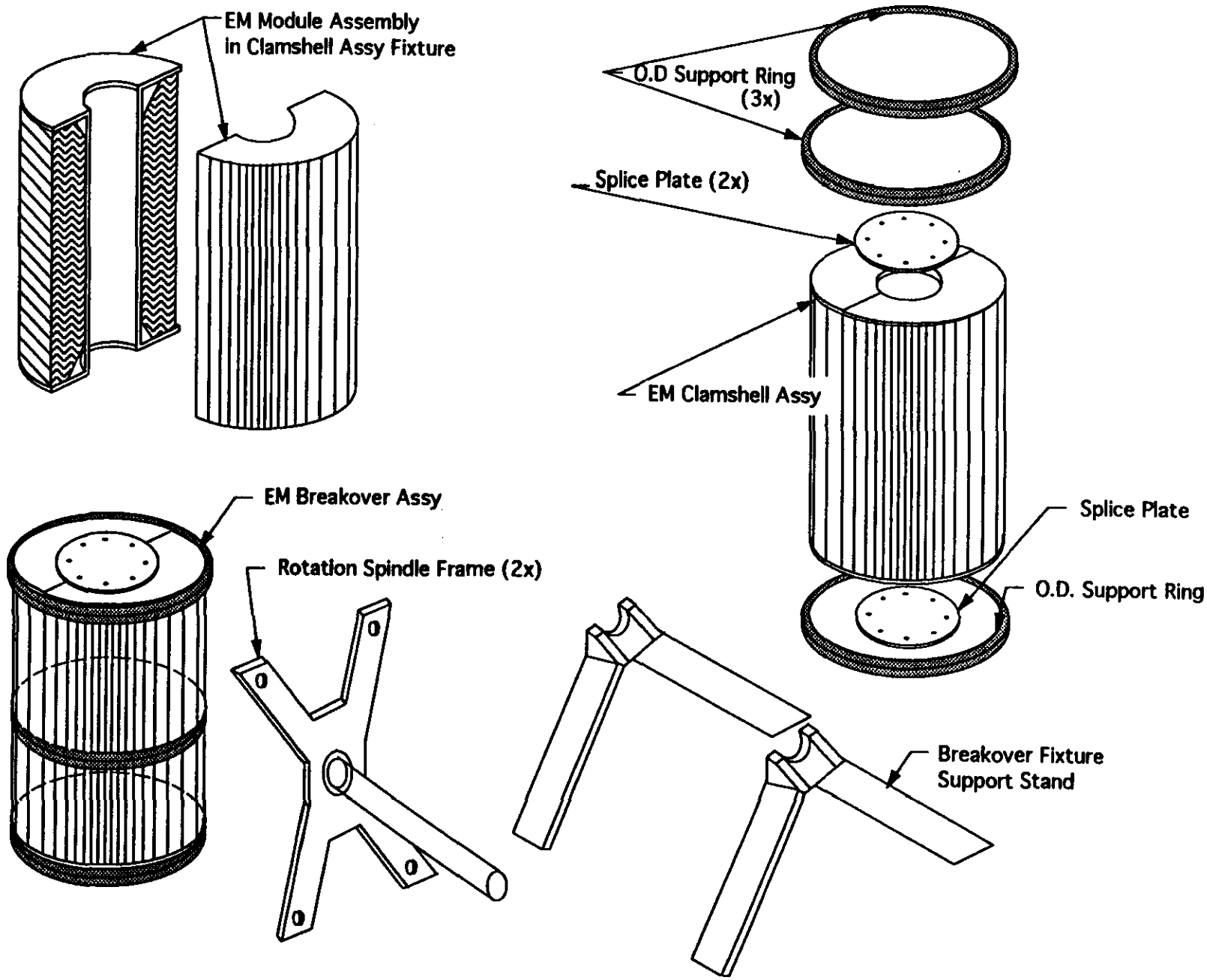

EM MODULE ASSEMBLY - INSERTION FIXTURE

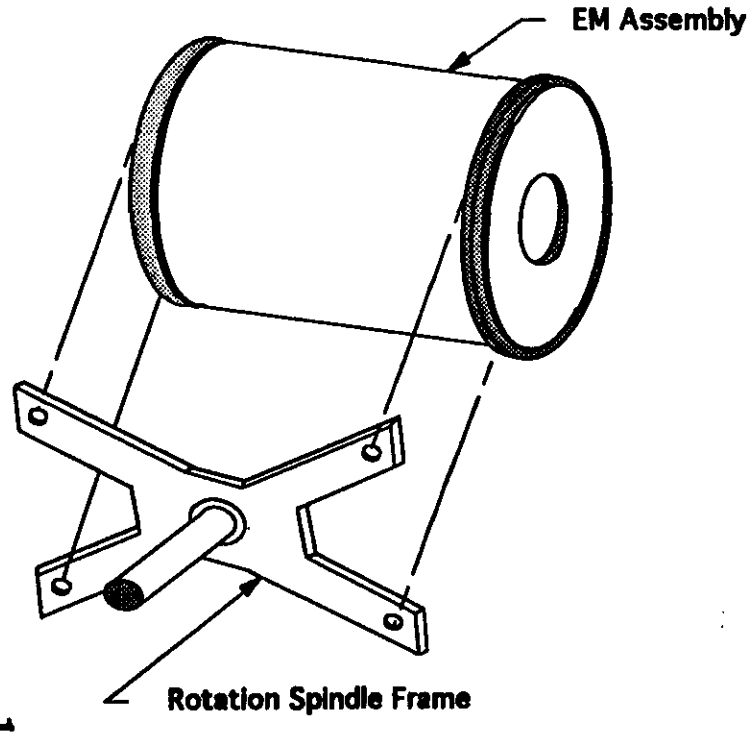

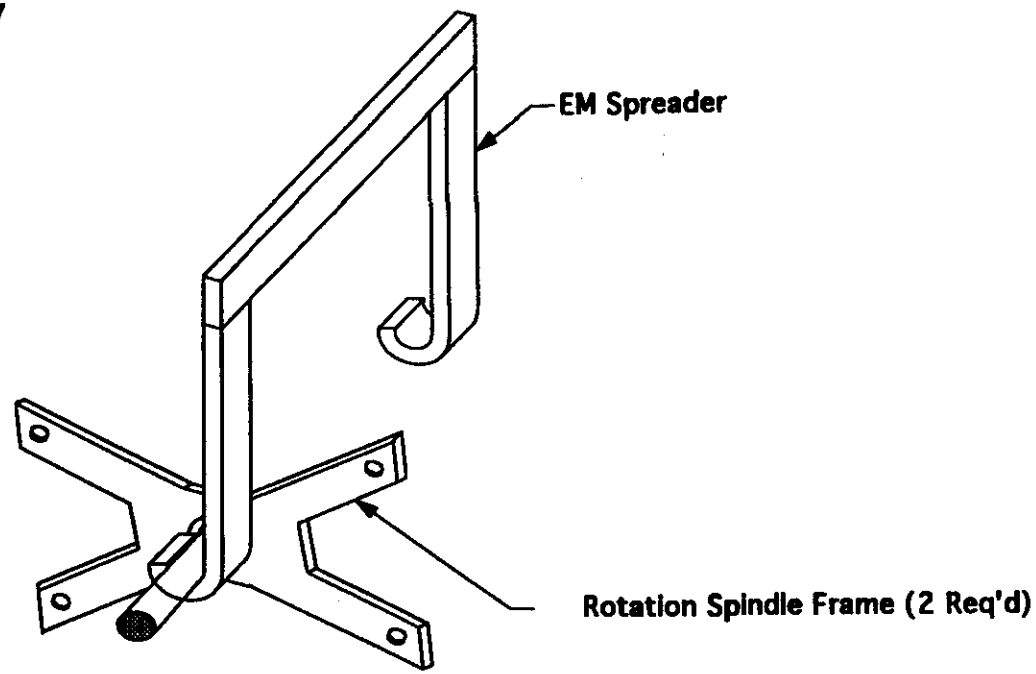

1. Mate EM assembly and tool to Hadronic assembly.

2. Align rails.

3. Position outboard supports and release hoist.

4. "Roll transfer" EM assembly from tool to calorimeter.

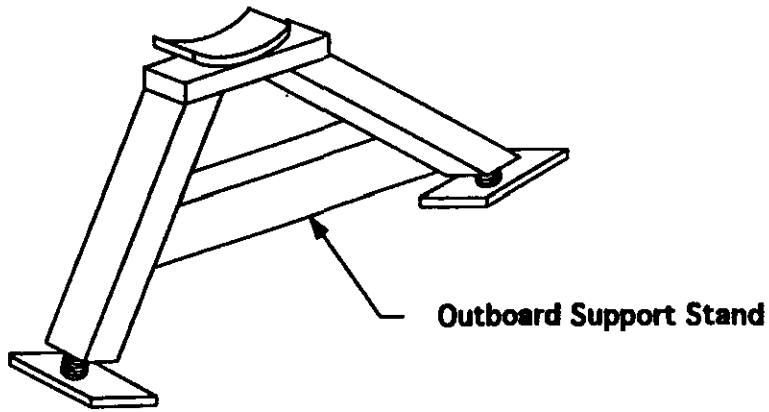

HADRONIC MODULE - SPOOL TOOLING

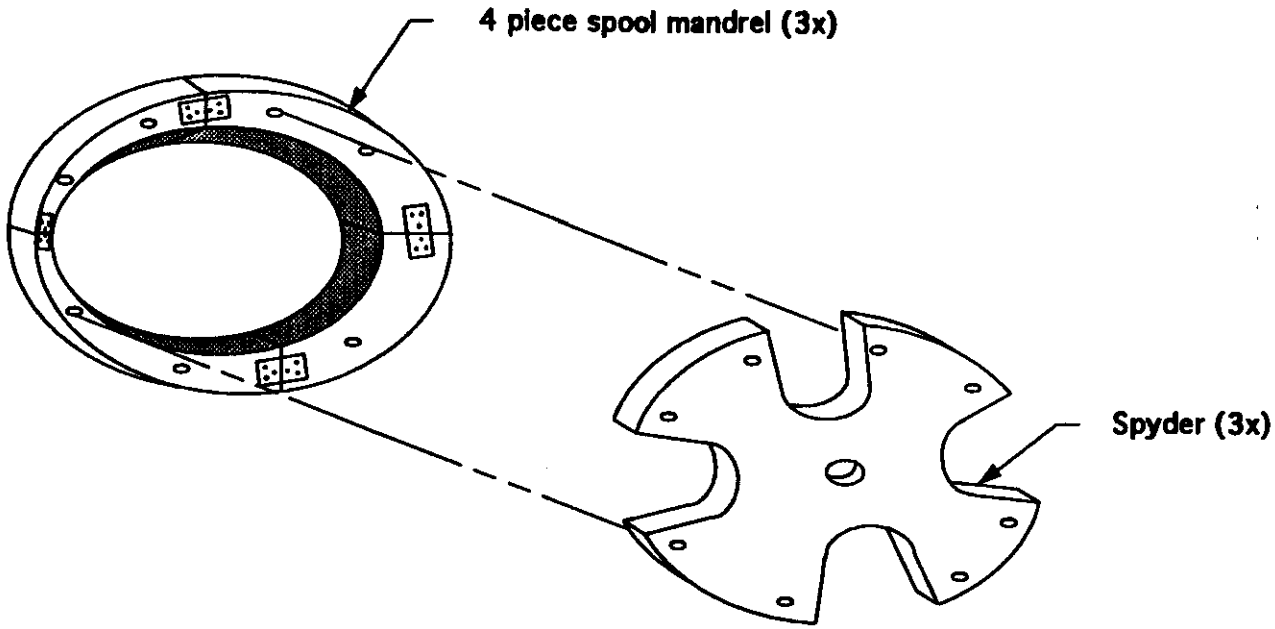

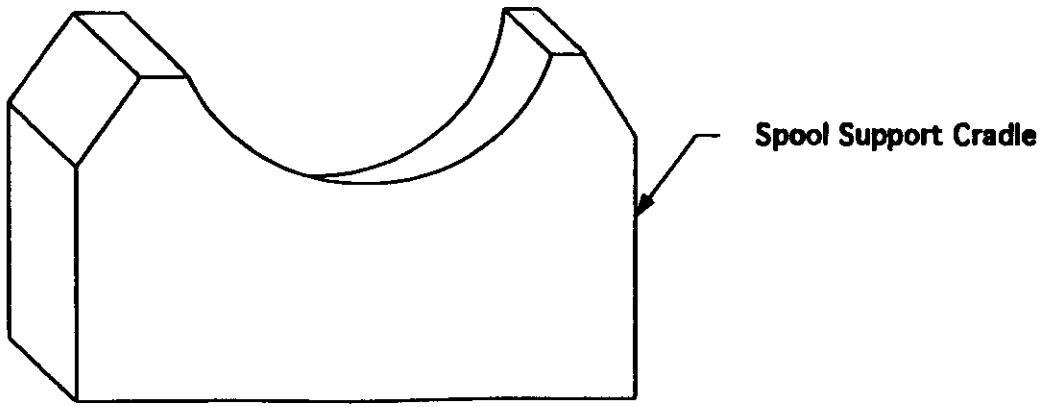

HADRONIC MODULE - Assembly Stand

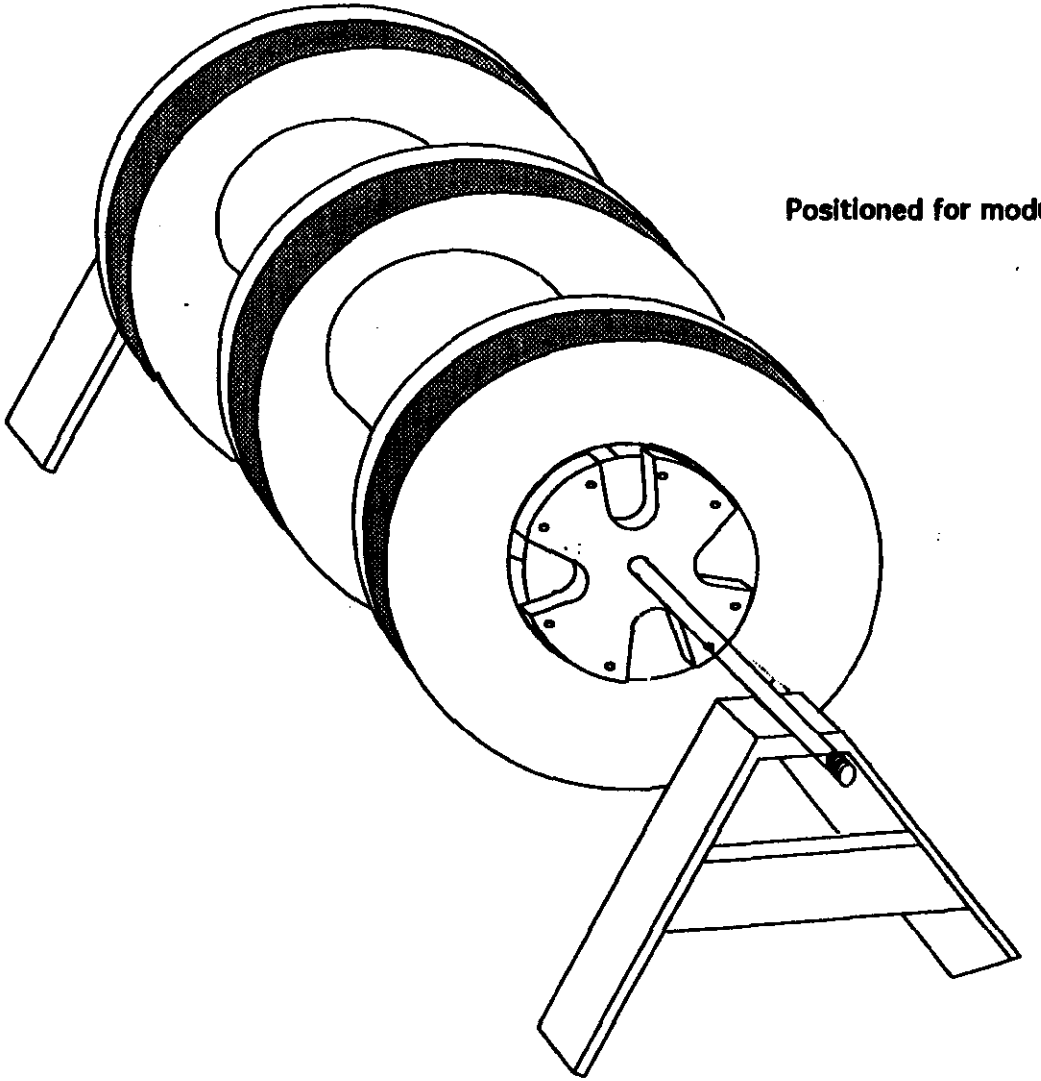

Positioned for module insertion.

HADRONIC MODULE - SPOOL TOOLING

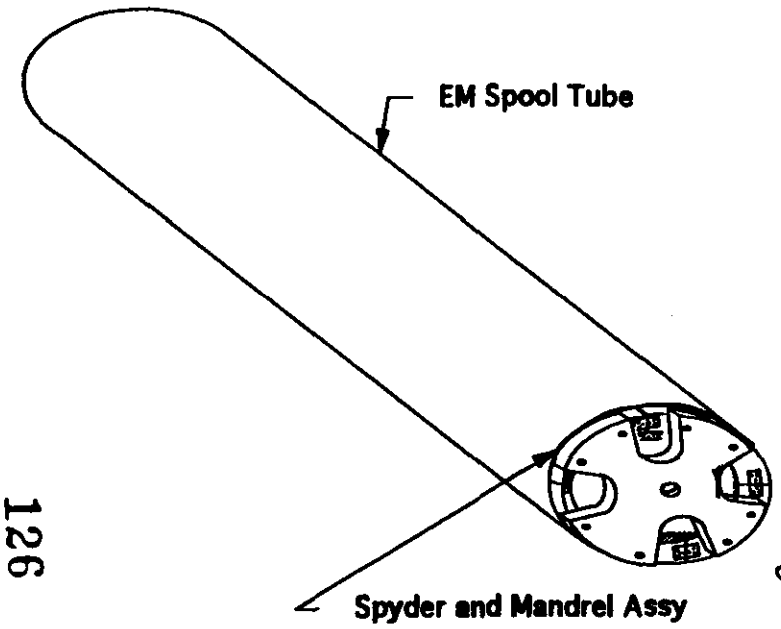

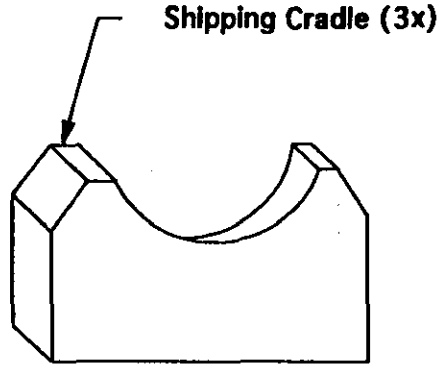

This structure is used to support the tube during general fabrication, welding operations and during transport.

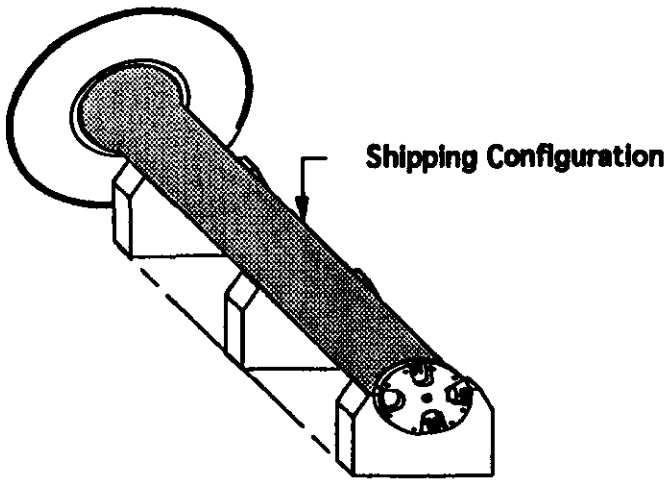

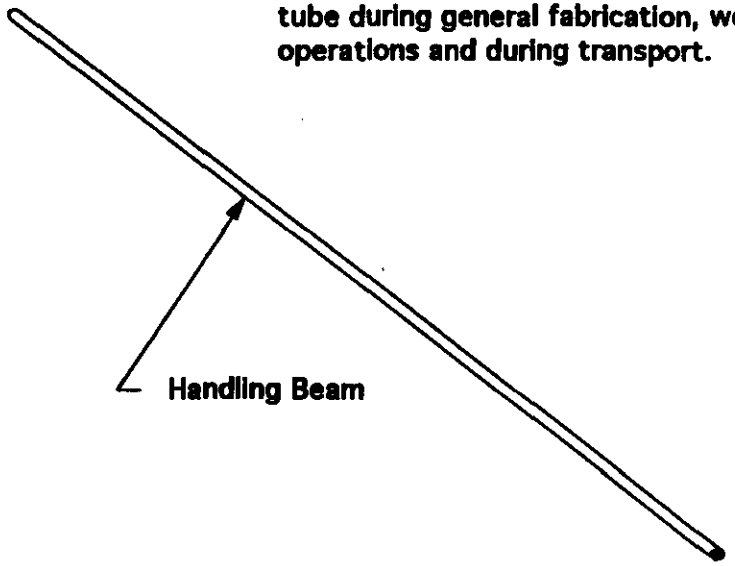

BARREL CRADLE

Used for build-up of vacuum vesssel and for transport

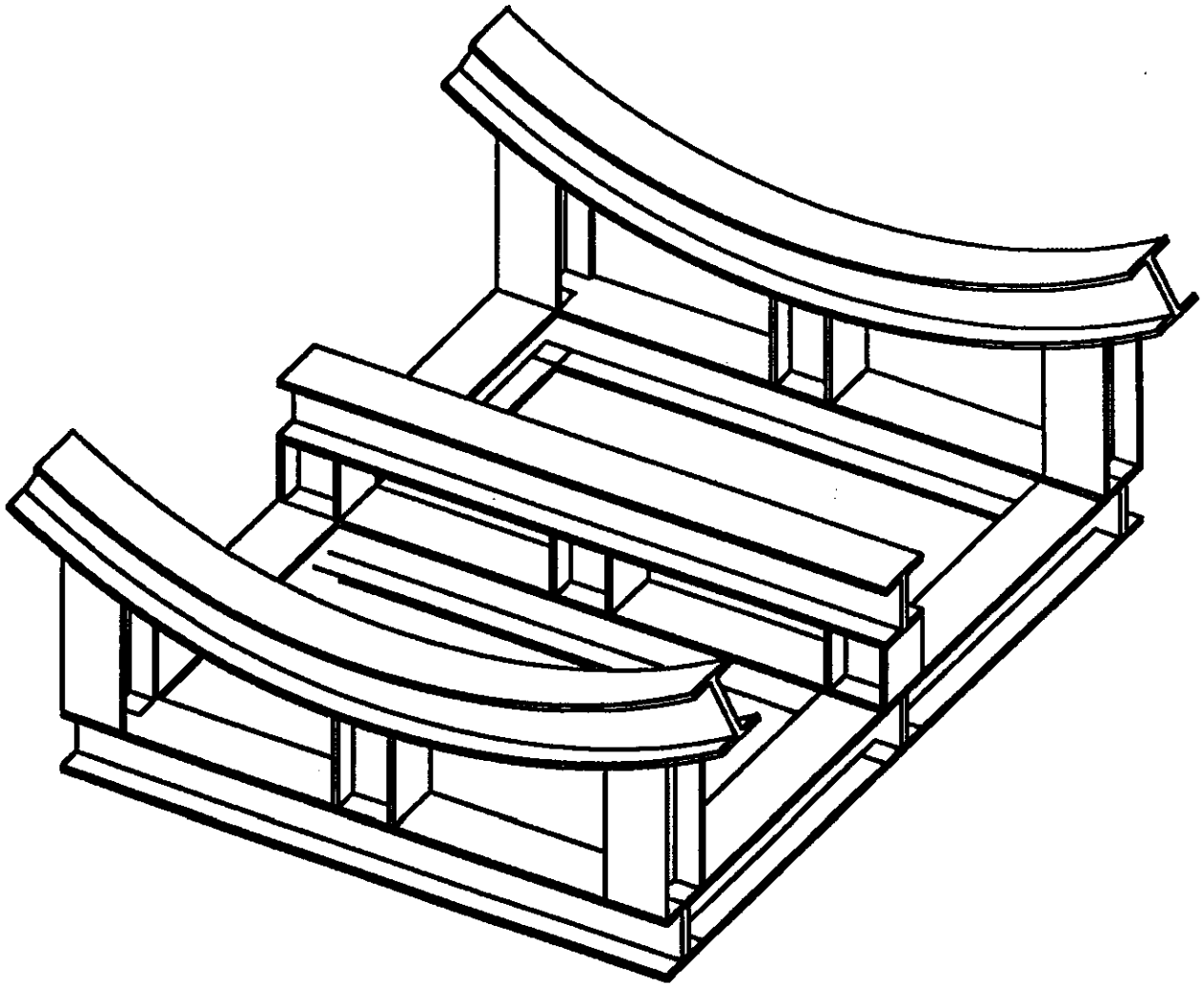

HADRONIC MODULE - ROTATION TOOL

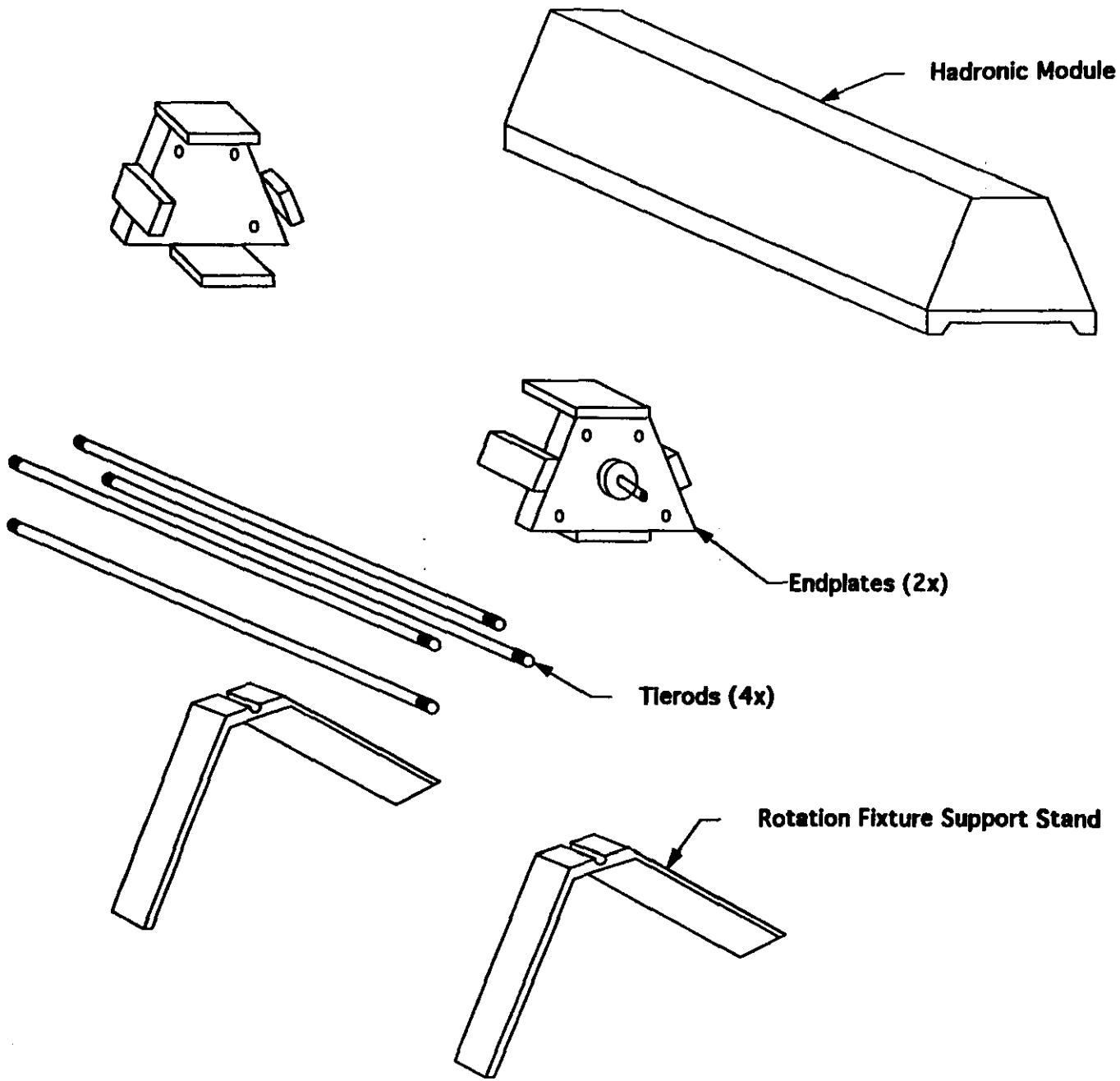

HADRONIC MODULE - INSERTION TOOL

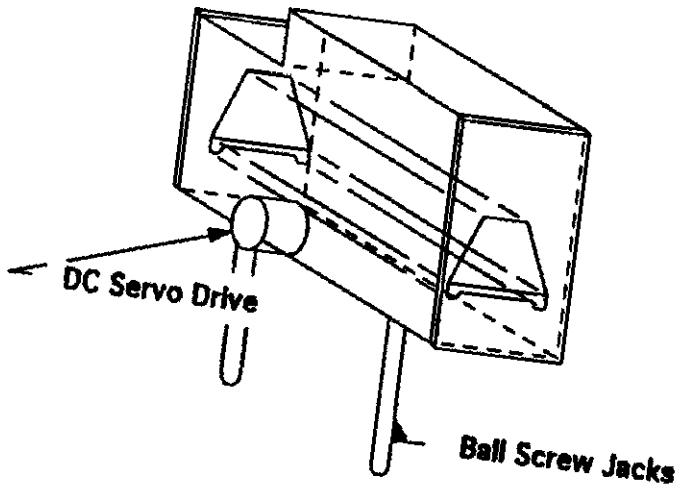

Use a DC servo drive to two ball screw jacks mated with the tool strongback. The endplates attach to the spool washers, keyways in the tool match keyways in the spool. Servo positions the module.

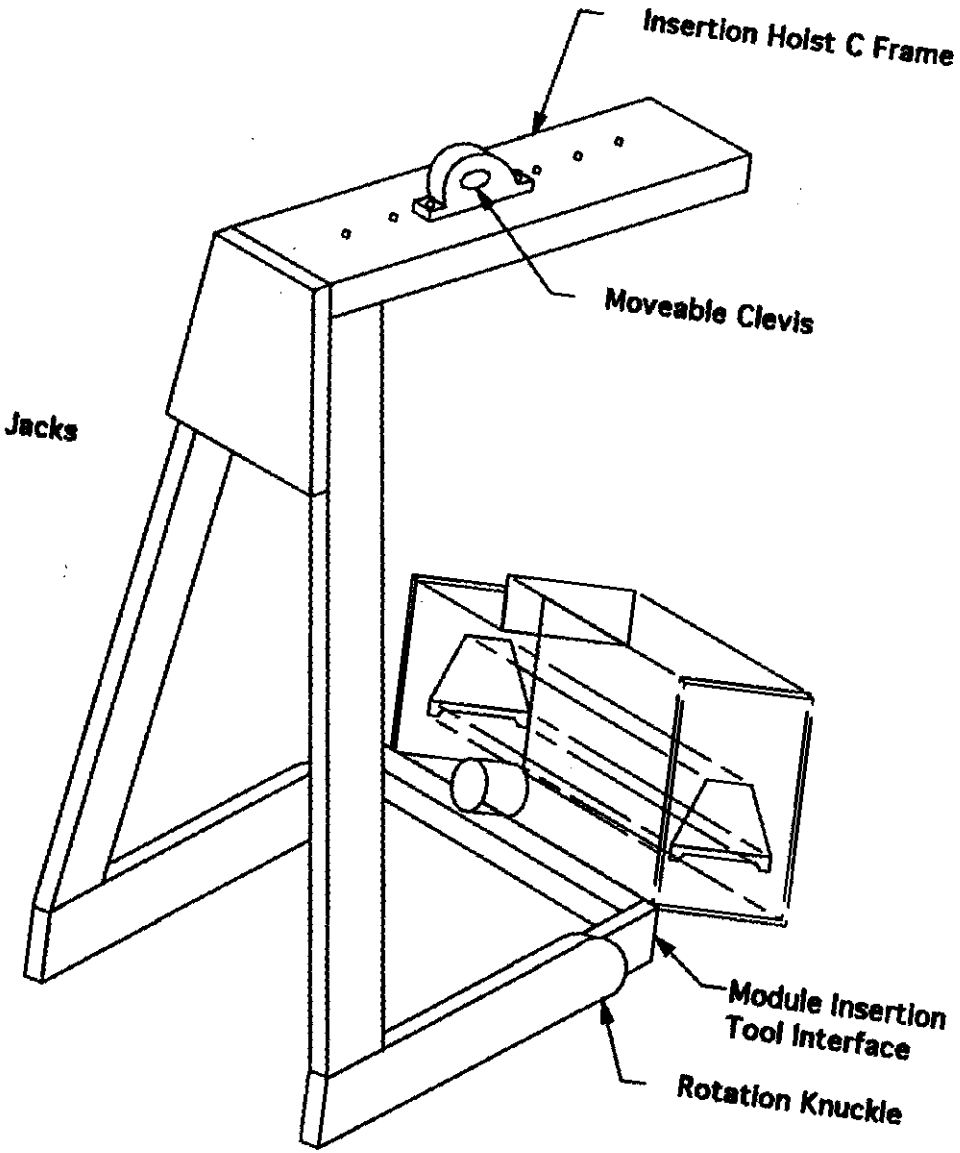

GEM BASELINE ENDCAP TOOLING

Used for fabrication and transport (3x for each endcap)

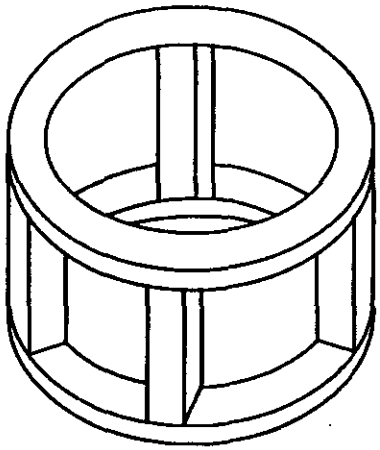

Tool splits in half
for removal

GEM BASELINE ENDCAP TOOLING

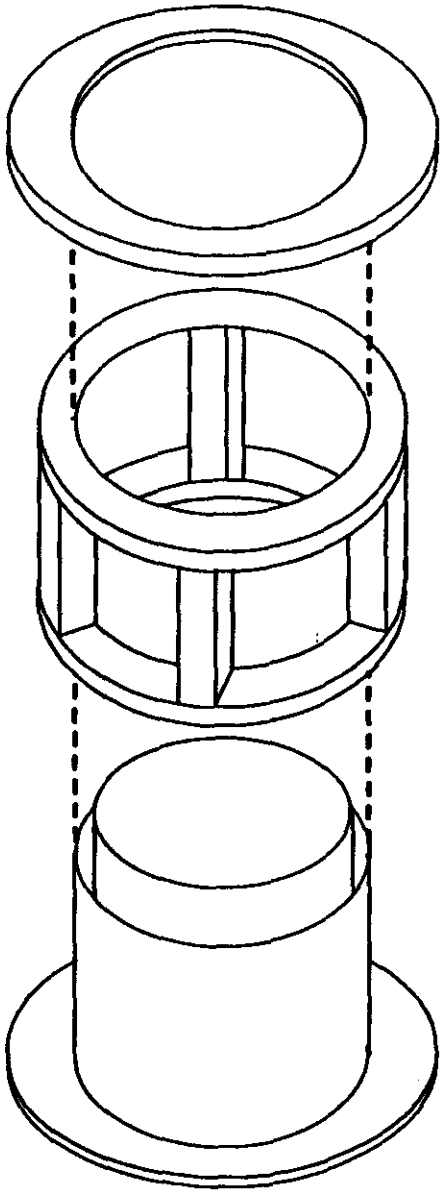

Location and welding of washer.

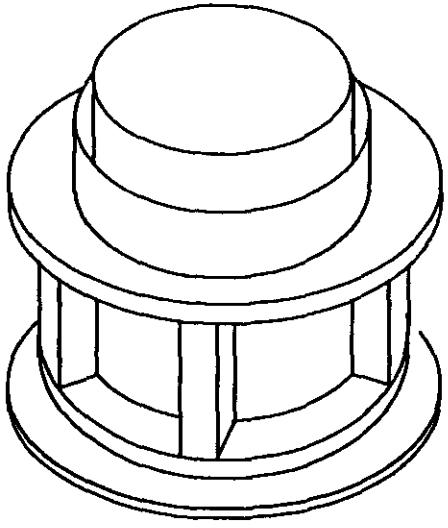

GEM BASELINE ENDCAP TOOLING

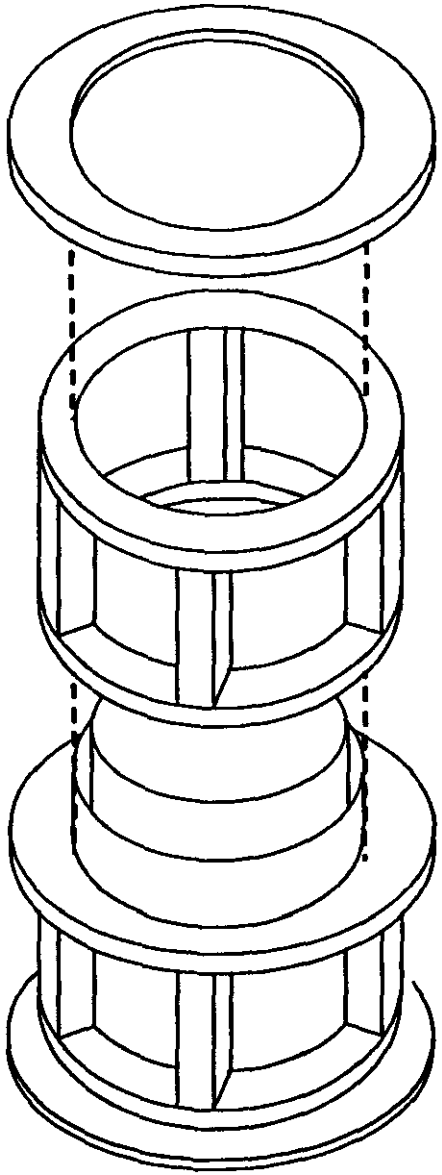

Location and weld assembly of washer.

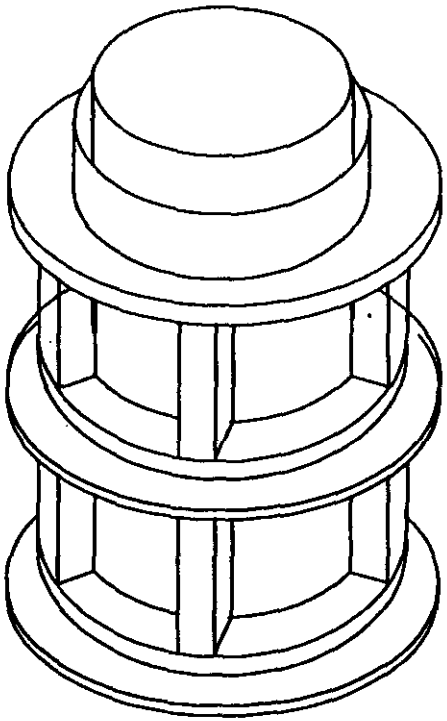

GEM BASELINE ENDCAP TOOLING

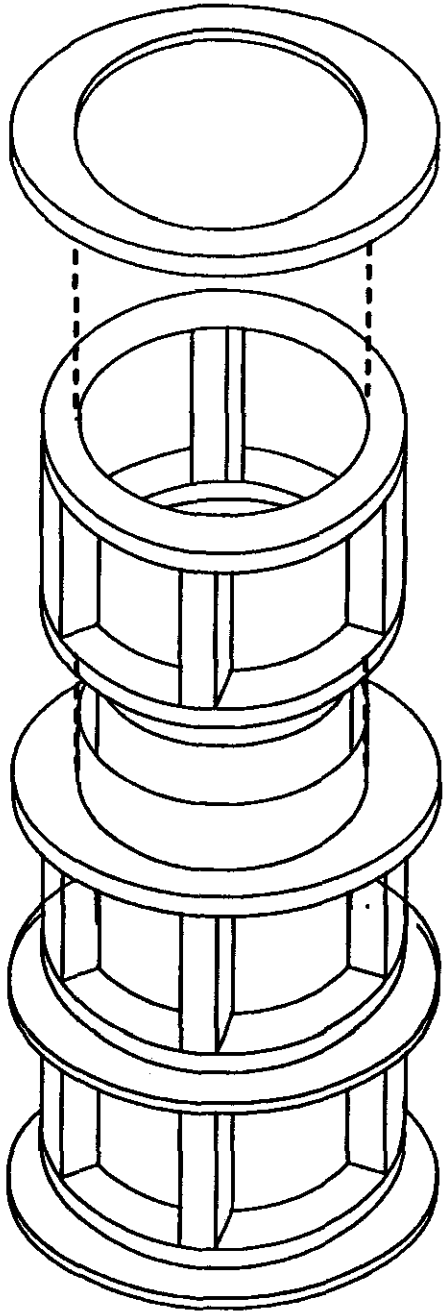

Location and weld of final washer on endcap outer spool.

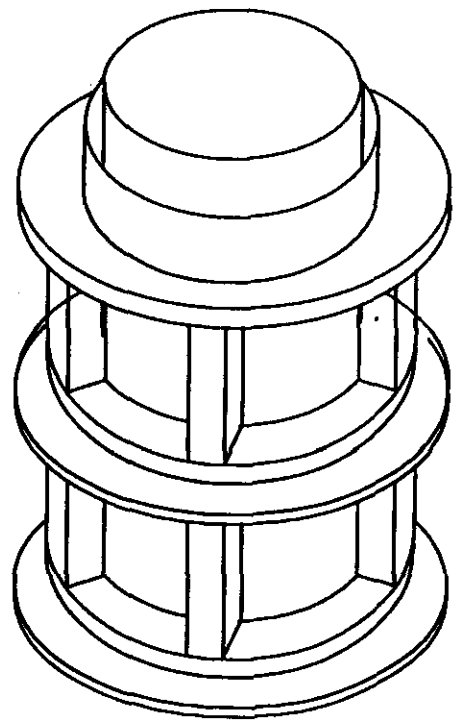

HADRONIC MODULE - SPOOL TOOLING

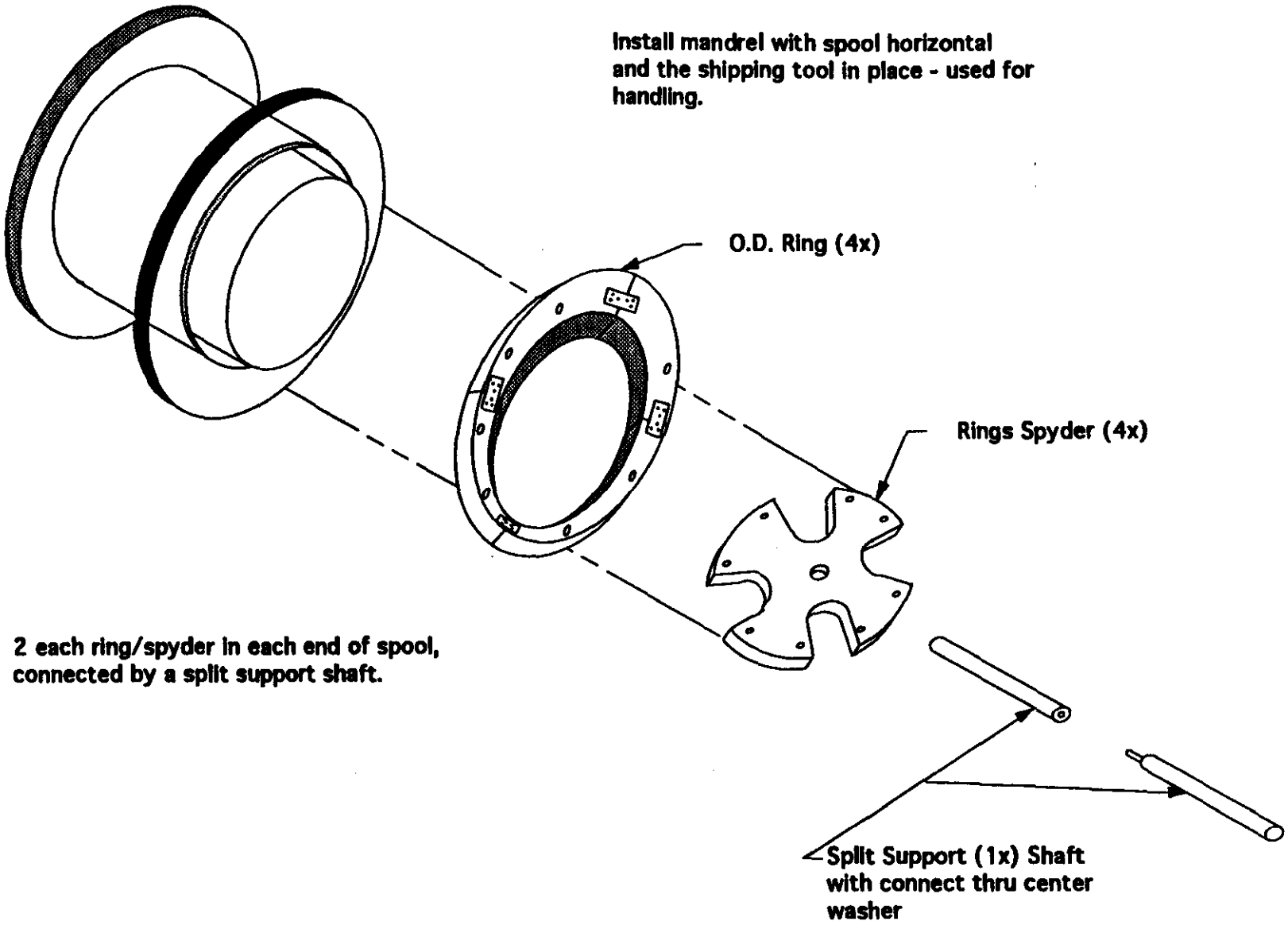

GEM BASELINE ENDCAP - END INSERTION SPREADER (2X)

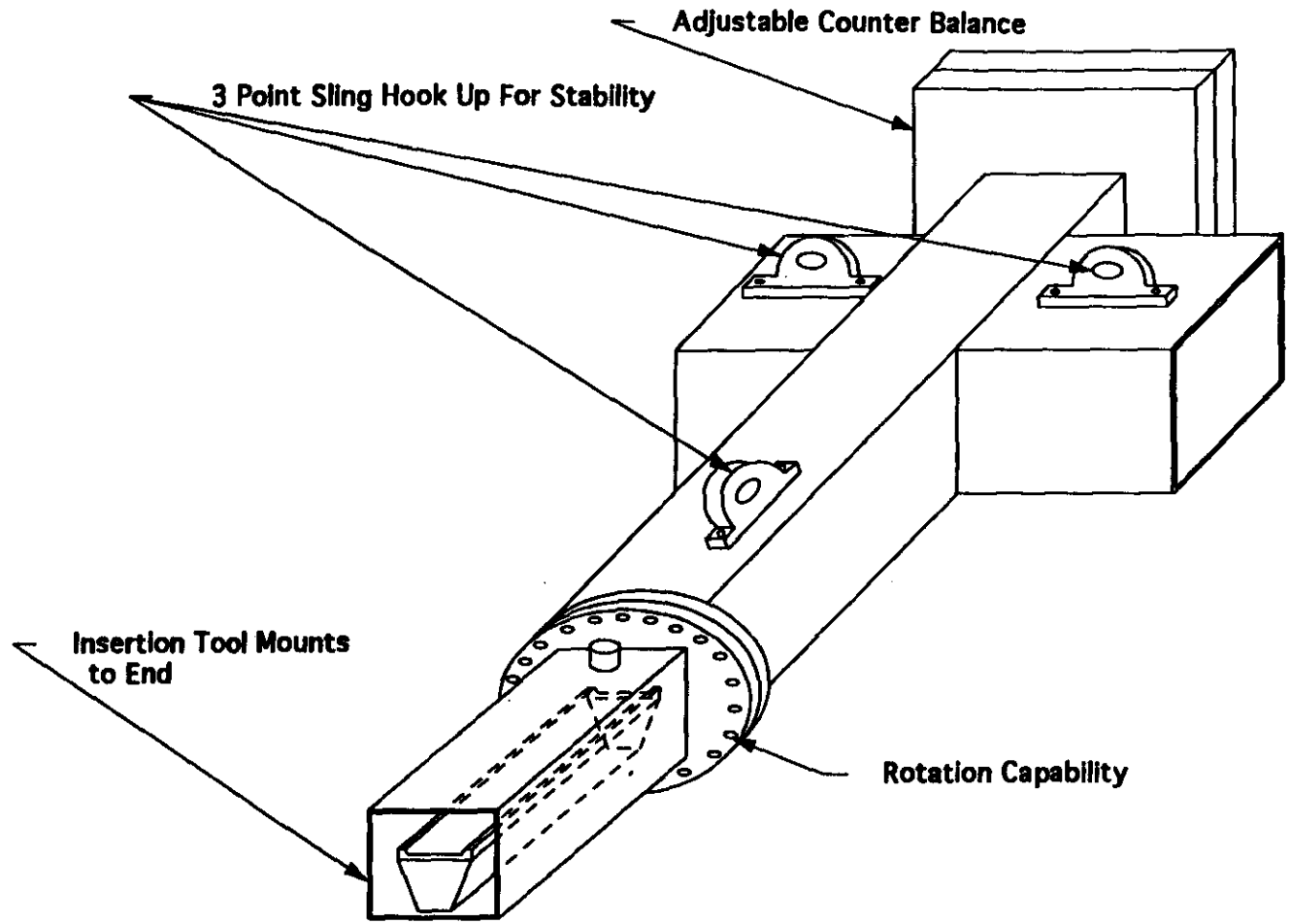

GEM BASELINE ENDCAP - FUNNEL INSERTION TOOL

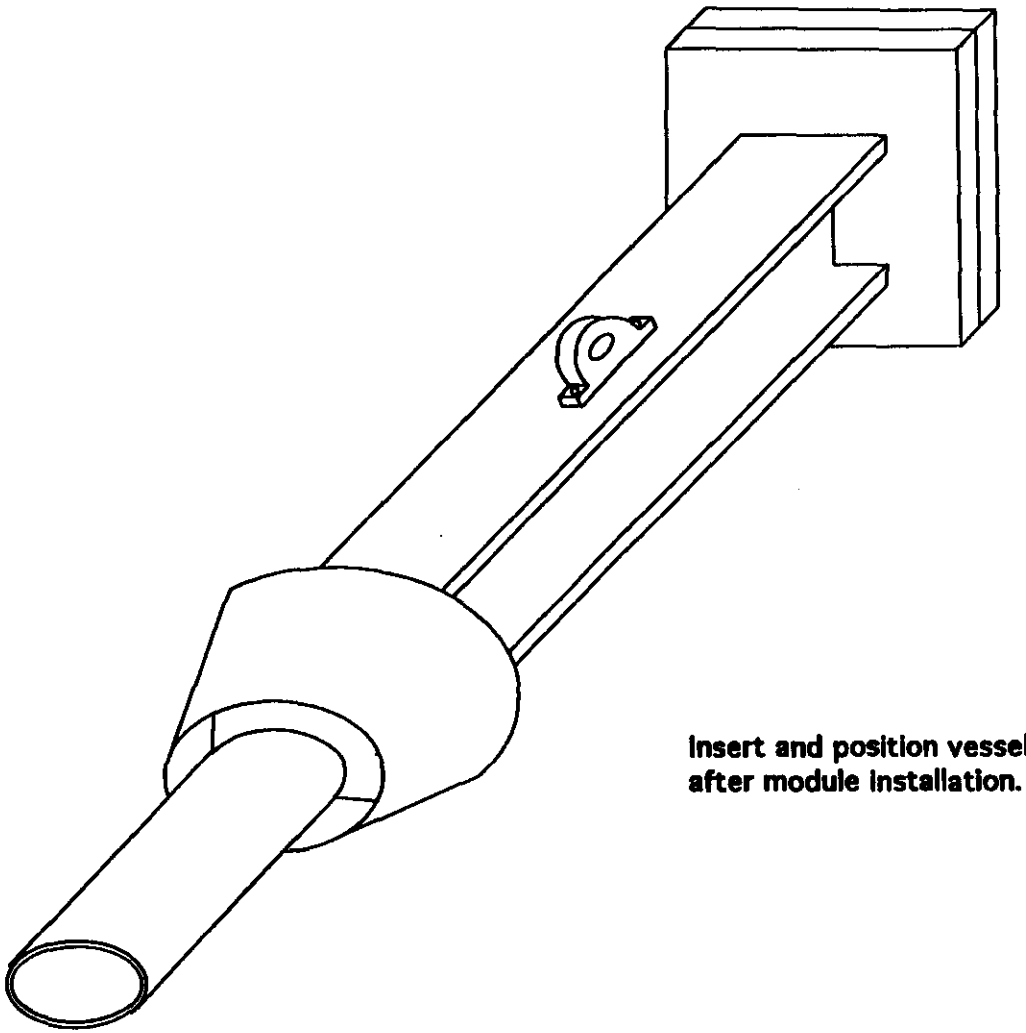

Insert and position vessel inside "funnel" after module installation.

GEM BASELINE ENDCAP - MODULE INSERTION TOOLS

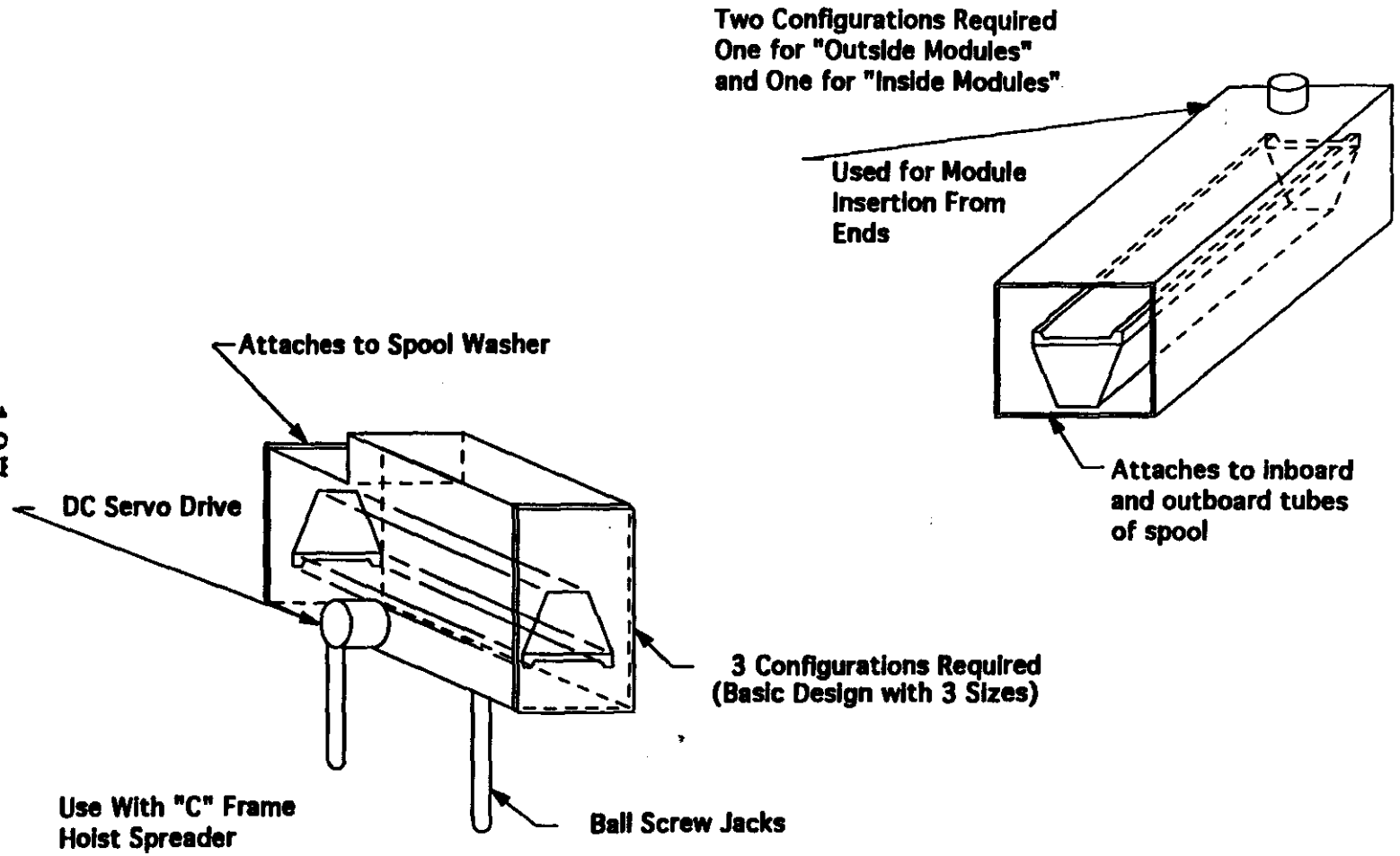

ENDCAP CRADLE

Used for vacuum vessel build-up and transport.

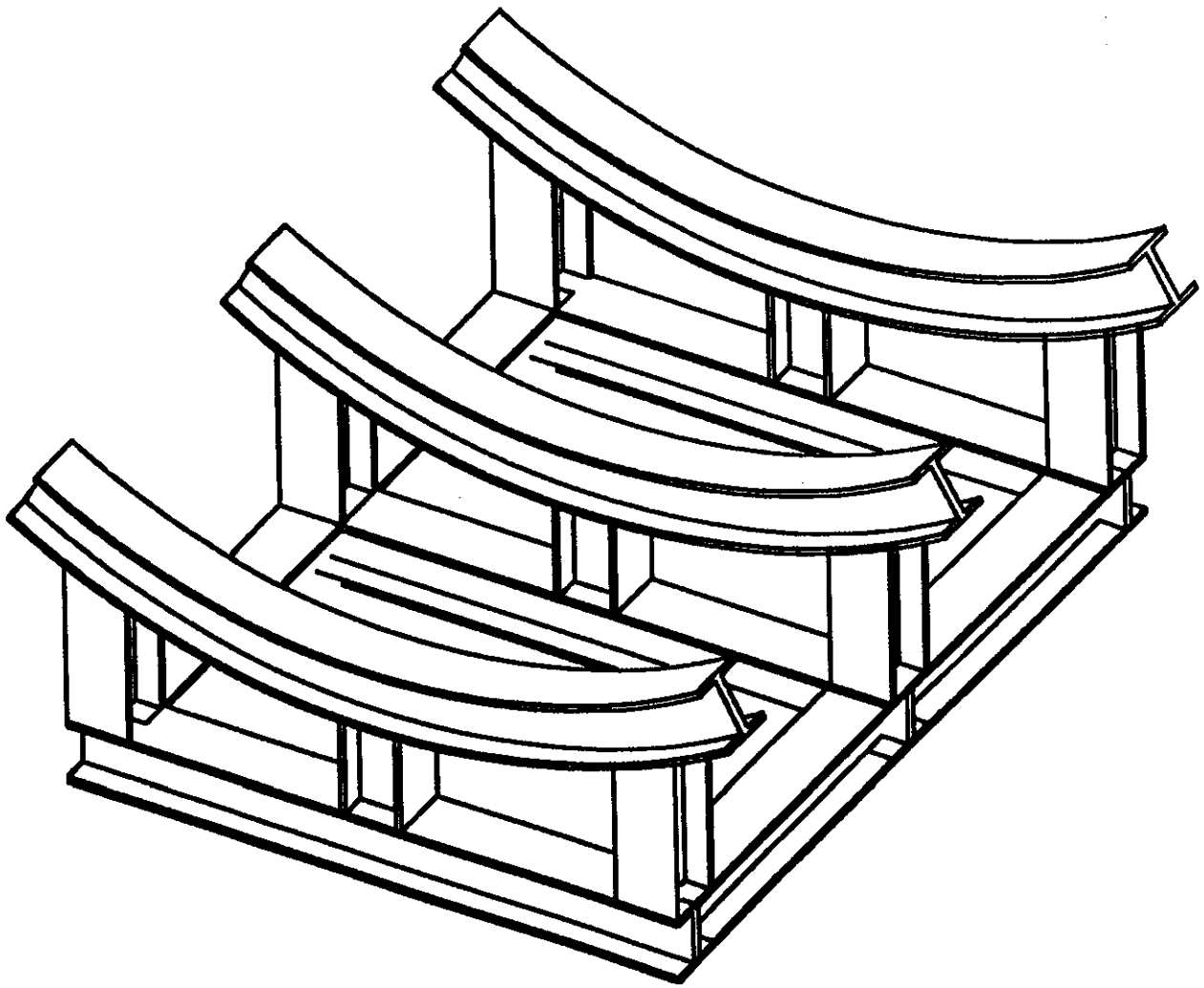

EM Subassembly Complete

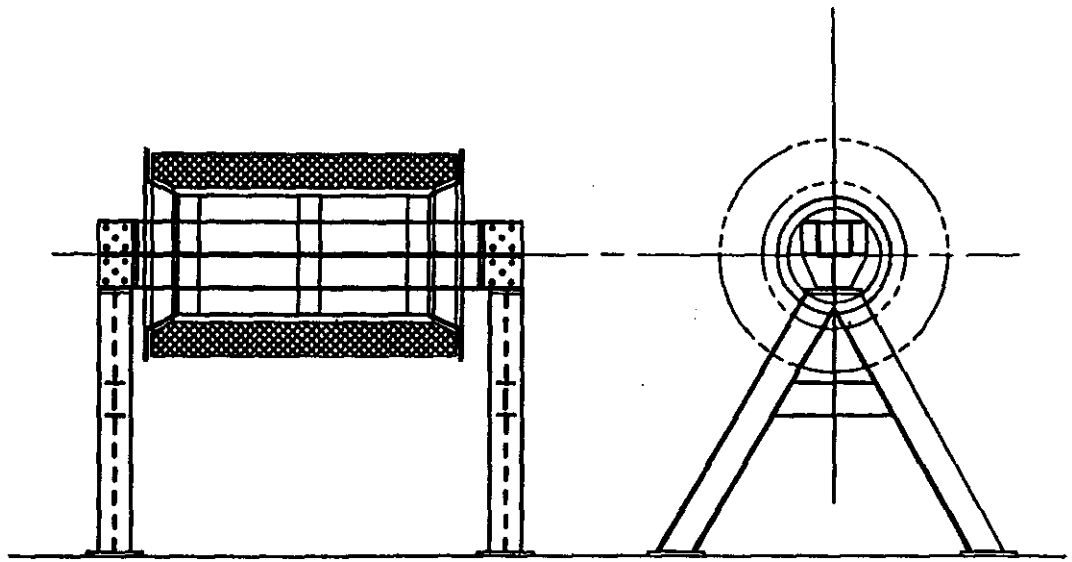

Rev "NEW"
BROGAN/MMAG
26 JUNE 1992

EM Support Beam With Extentions on the Insertion Stantions

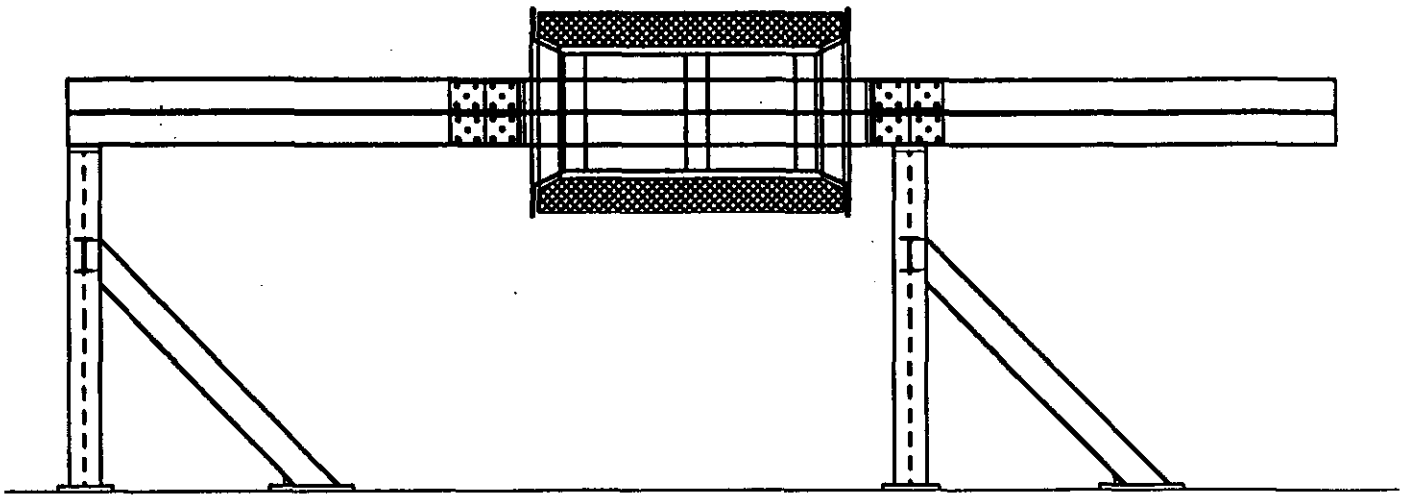

Rev "NEW"
BROGAN/MMAG
26 JUNE 1992

EM Ready for Insertion into the Barrel Hadronic Section

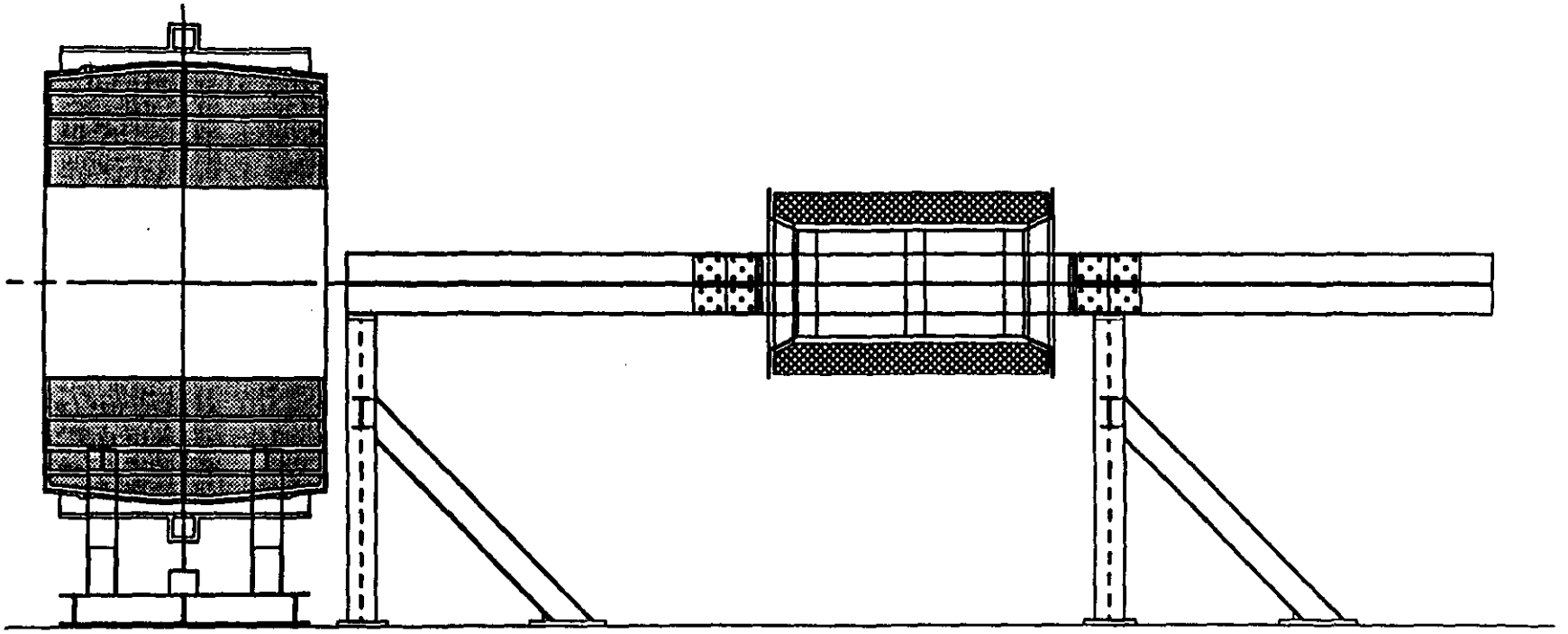

Rev "NEW"
BROGAN/MMAG
26 JUNE 1992

EM Insertion Process Started With Stantion Moved to Receive the Support Beam

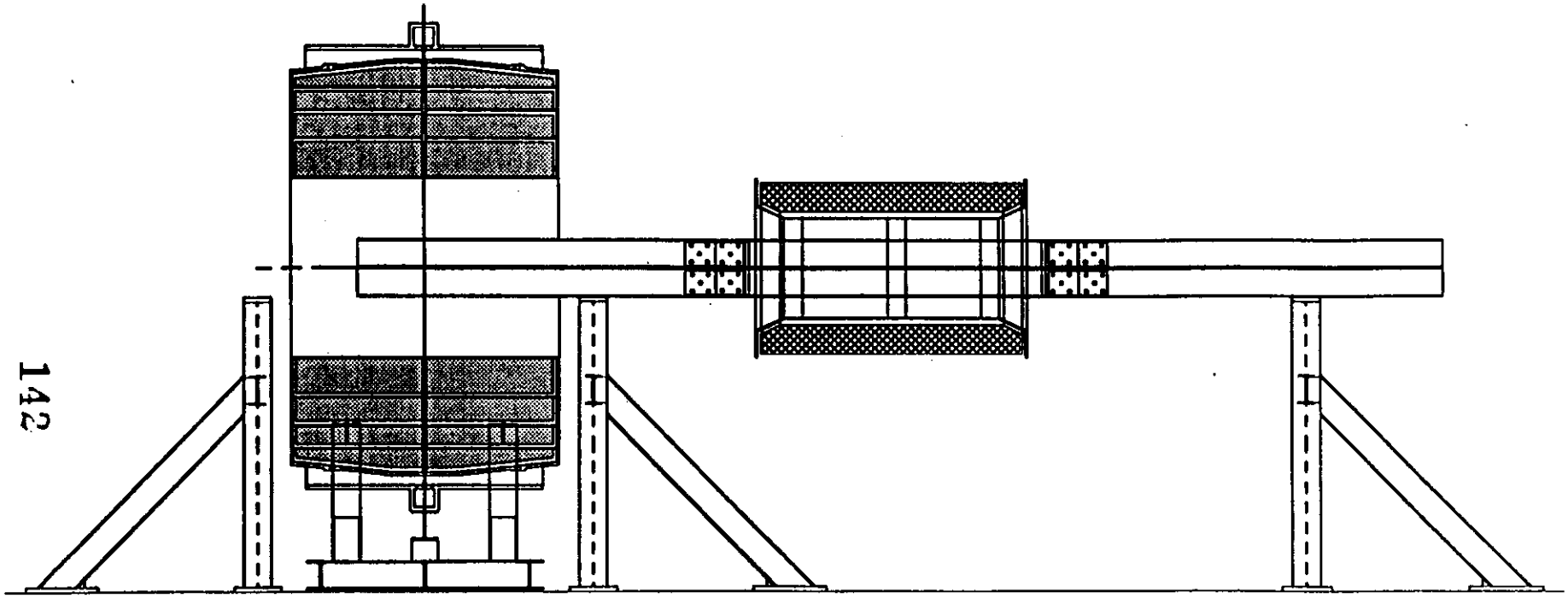

Rev "NEW"
BROGAN/MMAG
26 JUNE 1992

EM at Partial Insertion With Support Beam Through the Hadronic Section

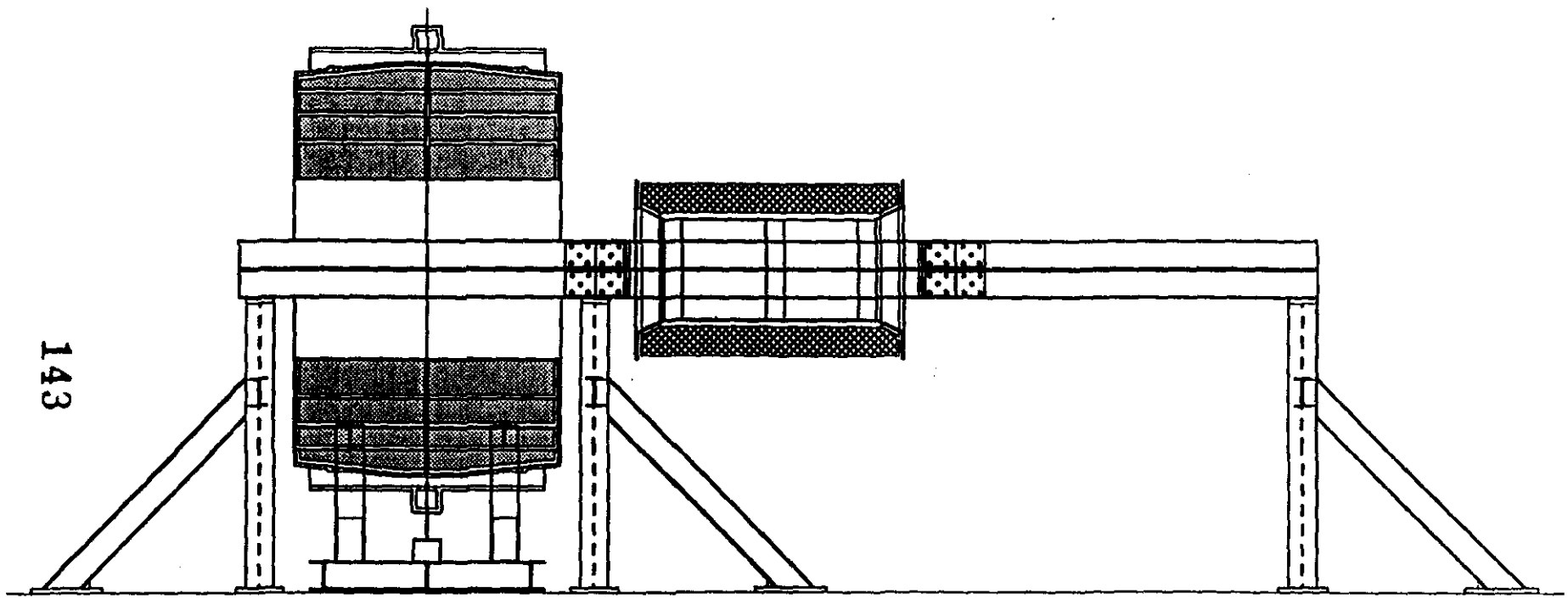

Rev "NEW"
BROGAN/MMAG
26 JUNE 1992

EM at Partial Insertion With Outboard Stantion Moved Inboard and Center Stantion Removed

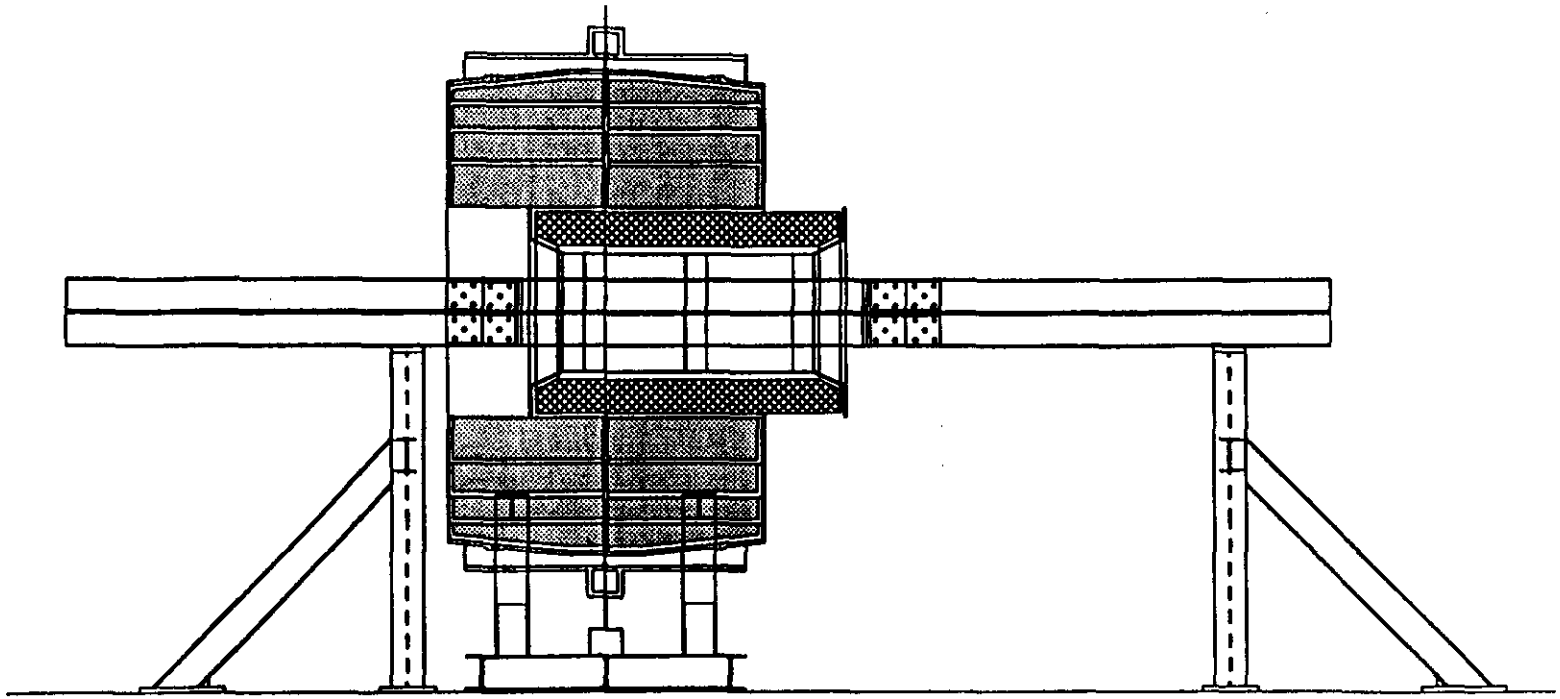

Rev "NEW"
BROGAN/MMAG
26 JUNE 1992

EM at Partial Insertion With Center Stantion Replaced

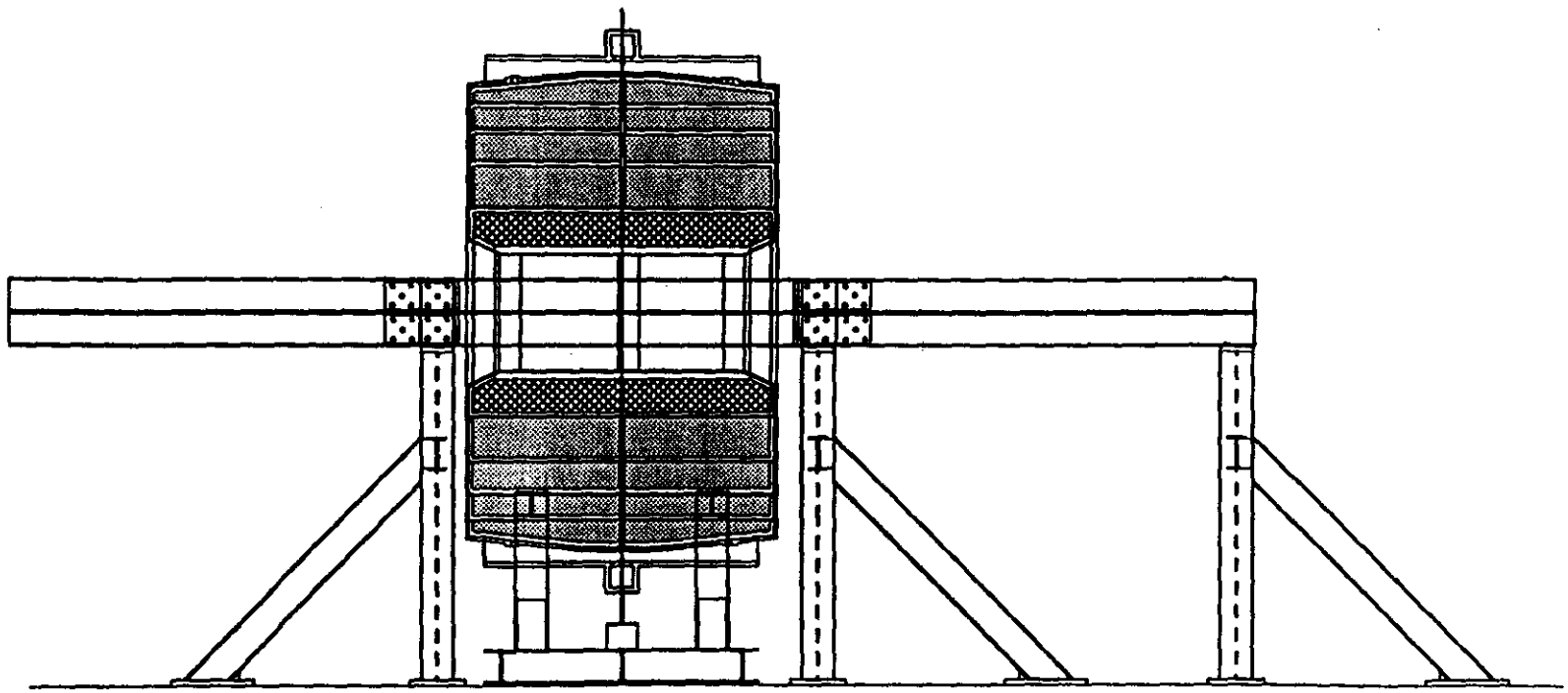

Rev "NEW"
BROGAN/MMAG
26 JUNE 1992

EM Inserted With outboard Stantion and Extention Beams Removed,
Ready for Close-out

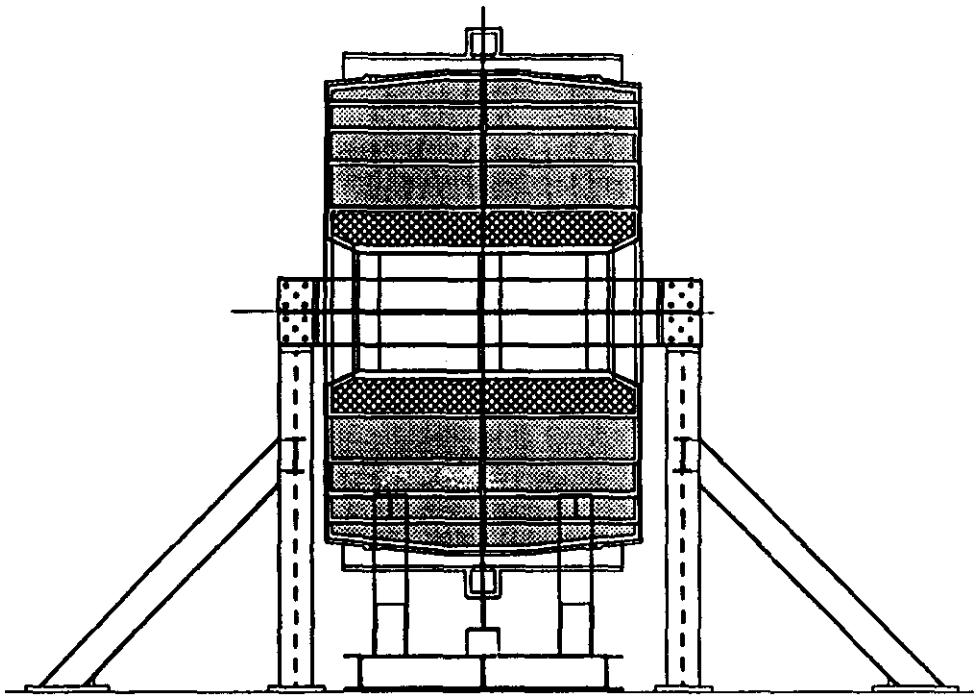

Rev NEW
BROGAN/MMAG
26 JUNE 1992

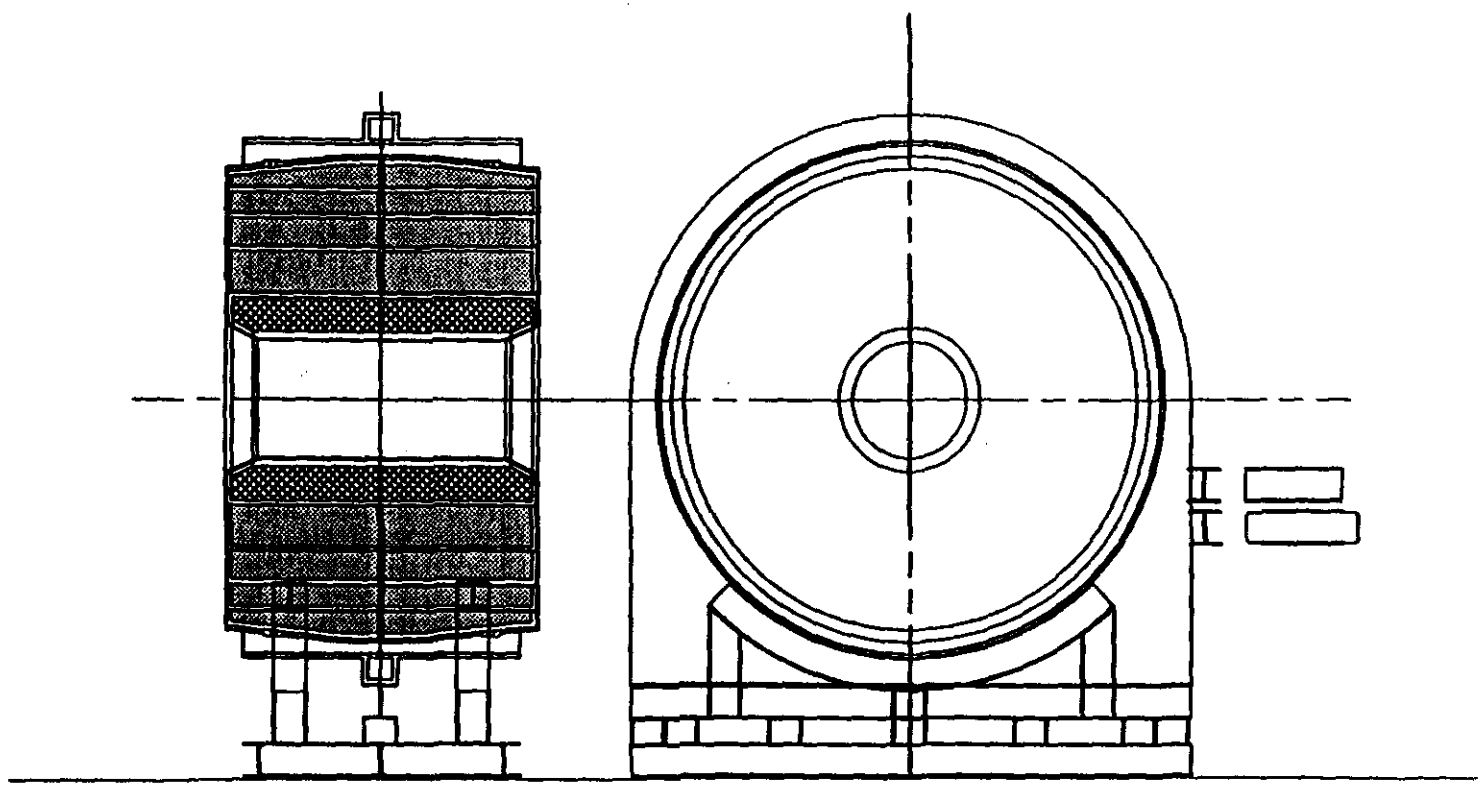

Rev "NEW"
W/ BROGAN/MMAG
26 JUNE 1992