GEM TN-92-137

The Effect of Inclined Tracks and the Lorentz Angle on the Spatial Resolution of the Interpolating Cathode Strip Chambers

V. A. Polychronakos - Brookhaven National Laboratory
V. Tcherniatine - Moscow Physics & Engineering Institute

July 4, 1992

Abstract:

The effect of inclined tracks and the Lorentz angle on the spatial resolution of the cathode strip chambers (CSC) is discussed. It is shown that for the gas mixture considered for these chambers and for the 0.8T magnetic field in GEM the resolution degradation as a function of angle of incidence both in the barrel and in the endcaps is less than 10% if the Lorentz effect is compensated for by tilting the chamber (barrel) or rotating the wires (endcaps). Further it is shown that knowledge of the magnetic field is not necessary to better than ~ 20%.

BROOKHAVEN NATIONAL LABORATORY

July 4,1992 GEM/CSC 7-92

The Effect of Inclined Tracks and the Lorentz Angle on the Spatial Resolution of the Interpolating Cathode Strip Chambers

V. A. Polychronakos and V. Tcherniatine[1]
Brookhaven National Laboratory
Upton, NY 11973 USA

1 Introduction

The Cathode Strip Chambers (CSC) derive the precision coordinate from the determination of the center of gravity of the charge induced on the cathode strips when an avalanche is formed on an anode wire. The direction of the precision measurement is along the wires since the strips (or pads) are oriented at right angles with respect to the anodes. The charge interpolation is optimum when the avalanche is formed on a single point along the wire. A finite spatial extend of the anode charge results in a resolution degradation. Such non-local charge deposition can be caused by a number of factors such as diffusion of the drifting electrons, absorption of δ-electrons, inclined tracks, and a Lorentz force along the anode wires in the presence of a magnetic field which is not collinear with the electric field of the chambers. In this note we will concentrate on the last two effects. We will discuss their influence on the single layer spatial resolution for both the Barrel and Endcap chambers, and we will describe ways to minimize this effect. Finally we will show that, in order to restore near optimum resolution, uniformity of the magnetic field and precise knowledge of the field components are not necessary. This is particularly important in the case of the Endcap modules of the last two superlayers which are located in the nonuniform field created by the flux concentrator. We use both simple geometrical arguments as well as results of a detailed Monte Carlo which simulates the primary ionization along a minimum ionizing track for a given geometry, the avalanche formation, and the induced charge distribution on the cathodes. It takes into account all known factors which influence the resolution such as integration time of the electronics, electronic noise, errors in the intercalibration of adjacent channels, diffusion, δ-electrons, the differential nonlinearity, and effects of specific algorithms for the calculation of the center of gravity of the induced charge.

[1]Permanent address: Moscow Physics and Engineering Institute, Moscow, Russia.

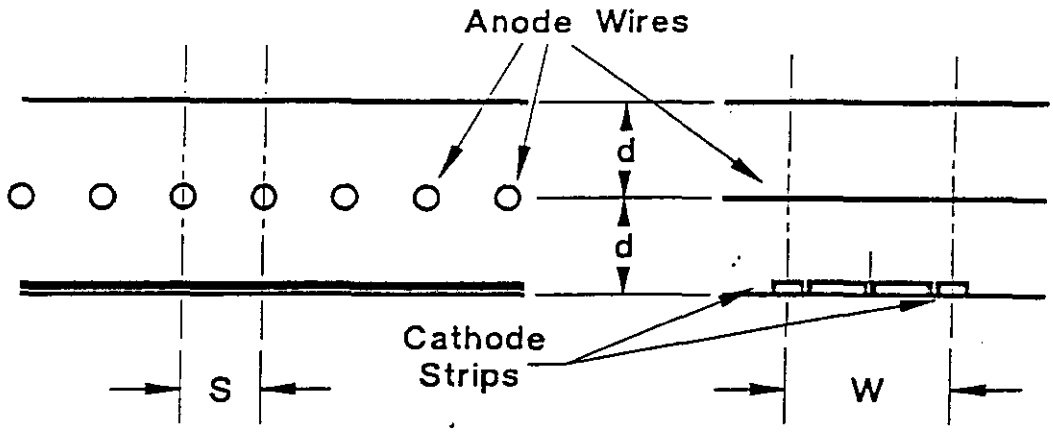

Figure 1: Geometry of the basic cell of the CSC

2 The Barrel Case

2.1 The Effect of the Inclined Tracks

The basic cell structure for the chambers considered both for the Barrel and Endcaps is shown in Figure 1. The distance between the anode plane and either cathode, d, is 2.5 mm, the wire spacing, s, is also 2.5 mm and the spacing of the readout nodes, w, is 5.0 mm.

Consider first a module in the Barrel section because symmetry and simple geometry make it easier to analyze. In this case the anode wires are azimuthal and the strips axial and, therefore, parallel to the field of the solenoid which, assume for the moment, is turned off. Consider first a track incident at an angle θ and in a plane containing an anode wire as shown in Figure 2.

The primary ionization electrons along the track are drifting under the influence of the electric field, $\vec{E}$, and form avalanches along the projected track length, l. If the charge density along this segment were uniform one could still accurately determine the center of gravity of the induced charge on the cathode strips. Due to the Landau fluctuations, however, the reconstructed position could be anywhere along the length AB. It improves as the square root of the primary ionization clusters, n_c, since, in the limit $n_c \rightarrow \infty$ the charge distribution becomes uniform. Thus the degradation of the spatial resolution in the strip chambers due to inclined tracks is given by:

$$\sigma_i = \frac{2d\tan\theta}{\sqrt{12}\sqrt{n_c}}$$

This error should be added in quadrature to the intrinsic interpolation error which, in our case, is $\approx$ 40–50 μm. Note that although this limit has been achieved in small chambers [1] the GEM Muon System design specifications have as a realistic goal 75 μm for large chambers.

Consider, as an example, the configuration currently under study for the application of the CSC in the Barrel i.e. a 32-fold symmetry with modules that are not tilted to compensate for the Lorentz effect (see discussion in the following section). The range of incident angles for infinite momentum tracks is then $\pm 5.6°$. The resolution as a function

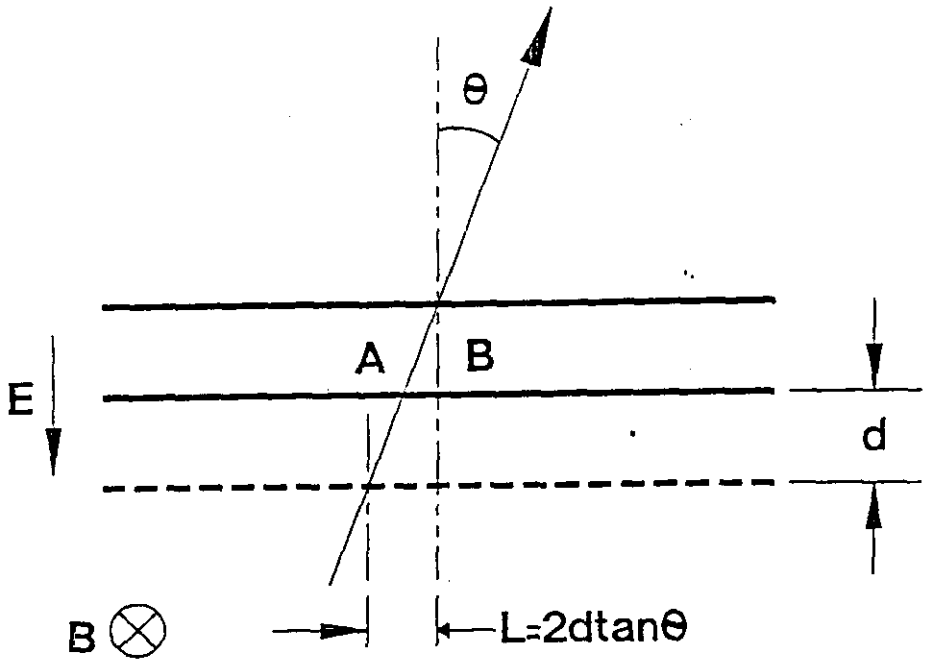

Figure 2: A track inclined by an angle θ

of angle of incidence within a sector is shown (assuming intrinsic resolution of 50 μm) in Figure 3. The resolution degradation reaches ≈30% at the edges of the chambers but, overall, is not too bad averaging about 20%. Notice, however, that the contribution of the inclined tracks to the resolution grows as the $\tan\theta$ and grows rapidly for larger angles θ.

2.2 Effect of the Lorentz angle

Consider now the case shown in Figure 4 where a track at normal incidence is shown and the magnetic field of 0.8 T is turned on. Although the primary ionization is deposited along a track length whose projection on the anode wire is zero the electrons drift under the influence of the Lorentz force in a direction θ_L, the Lorentz angle, with respect to the direction of the track. The net effect is a spread of the induced charge even though the angle of incidence of the track is 90°. When one now considers inclined tracks in the presence of a magnetic field the net effect is a shift in the apparent angle of incidence by an amount equal to the Lorentz angle, i.e. the $\tan\theta$ dependence of the center of gravity reconstruction error becomes $\tan(\theta + \theta_L)$. This is shown also in Figure 3 with the curve labeled "Field On". We used $\theta_L = 8°$ which is the Lorentz angle for the 50% CO_2, 50% CF_4 mixture we have chosen for the CSC operation (see next section for more details). The substantial resolution degradation is quite obvious and, in our opinion, unacceptable especially if one considers that the intrinsic resolution will likely be higher than 40–50 μm. But equally obvious is the solution to the problem. If the chamber is tilted by an angle equal to $-\theta_L$, a normal to the chamber track in the untilted geometry will have an apparent angle of incidence of $-\theta_L$ and, therefore, zero resolution degradation to first order. In effect it shifts the "Field On" curve to coincide with the curve labeled "Field Off". Pictorially this is also shown in Figure 4b where the charge

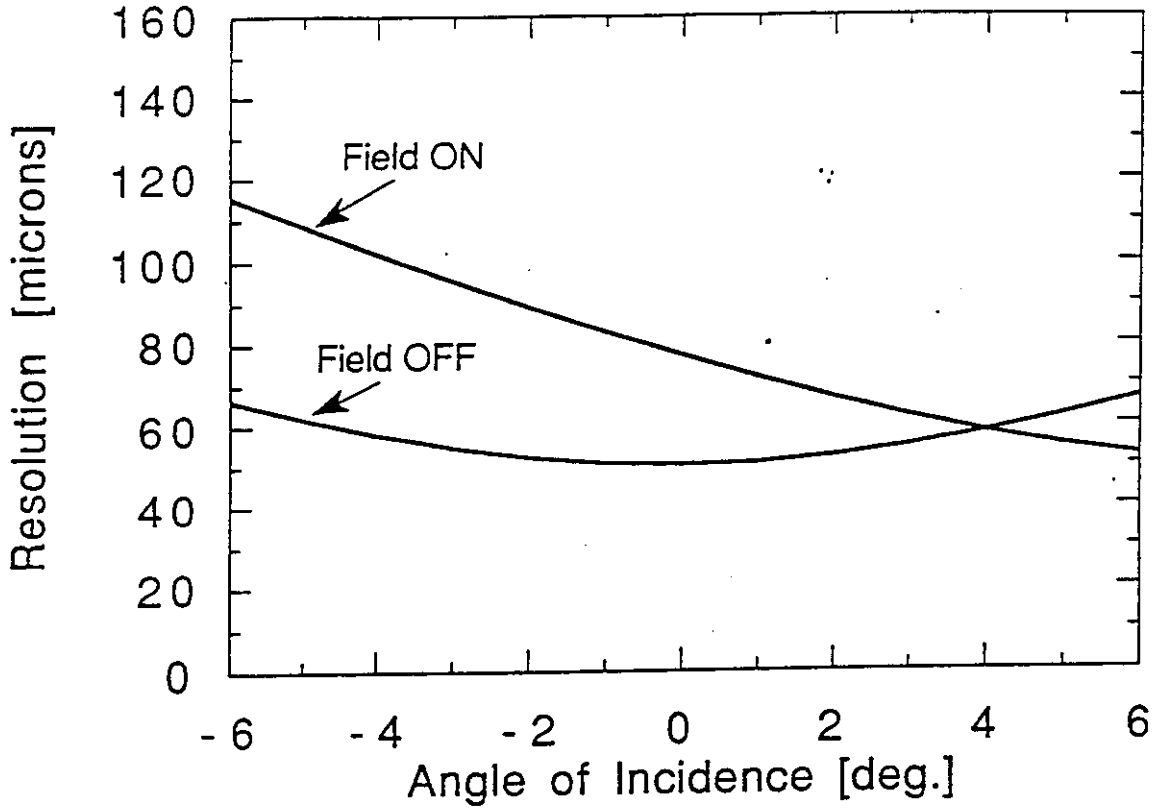

Figure 3: Resolution as a function of incident angle within a sector in a system with a 32-fold symmetry.

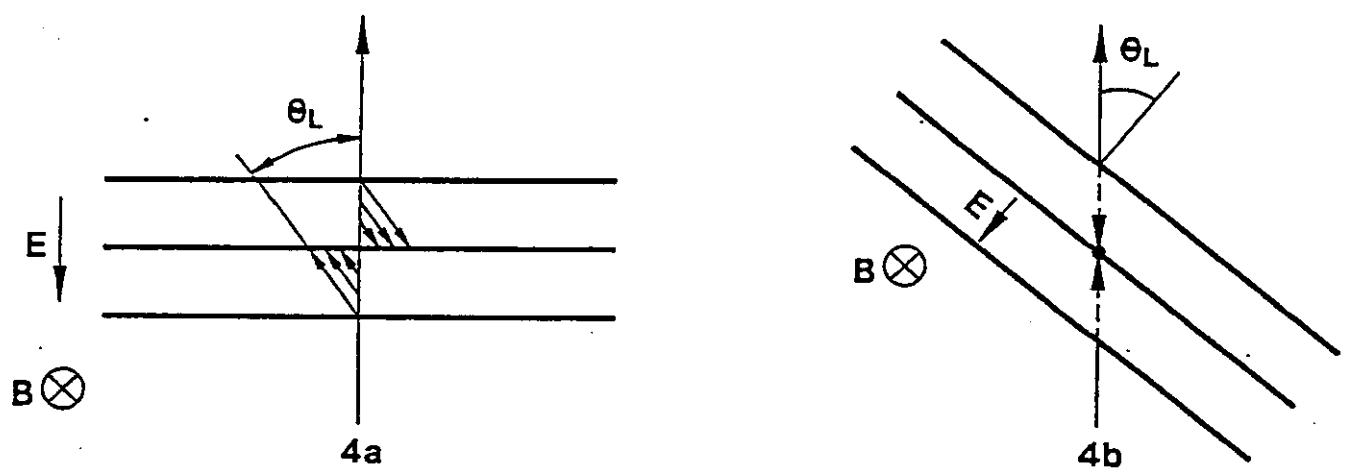

Figure 4: Normal incidence (4a) and compensation by tilting (4b)

is accumulated on a single point again for a track that would have normal incidence in an untilted arrangement of modules.

2.3 How well does one need to know the magnetic field?

The Lorentz angle, θ_L, is given by:

$$\tan\theta_L = k\frac{v_{dr}B}{E}$$

where v_{dr} is the drift velocity in cm/μs, B is the magnetic field in Tesla, and E is the electric field in kV/cm. The constant, k, depends on the gas mixture and has a value in the range 0.09–0.2. For given operating conditions v_{dr} and E are fixed. The Lorentz angle then depends linearly on the magnetic field. For the mixture we are currently considering $\theta_L = 8°$. Assume that the correction is made for this value but the field either varies over the area of the chamber by ±20% or that we don't know it's value to better than ±20% (the second is a rather ridiculous assumption but let's make it for the sake of the argument). Then the Lorentz angle varies by ±1.6°. The effect of this variation on the resolution is shown in Figure 5. Clearly the resolution is quite insensitive to the magnetic field. Even in the Endcaps the variation is not nearly as much for a given module. In fact nowhere the axial component of the field varies by more than ±0.07 T from the central value over the area of the largest Endcap modules.[2]

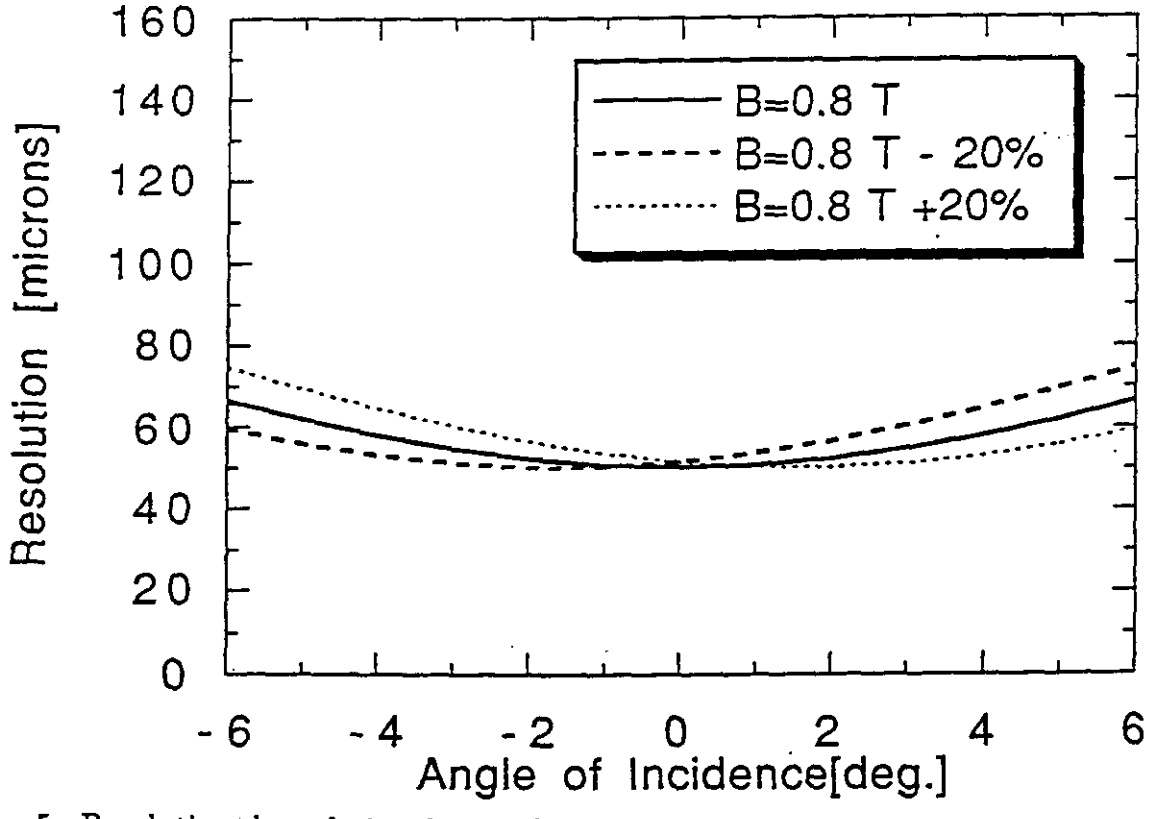

Figure 5: Resolution degradation for ±20% uncertainty in the knowledge of the magnetic field

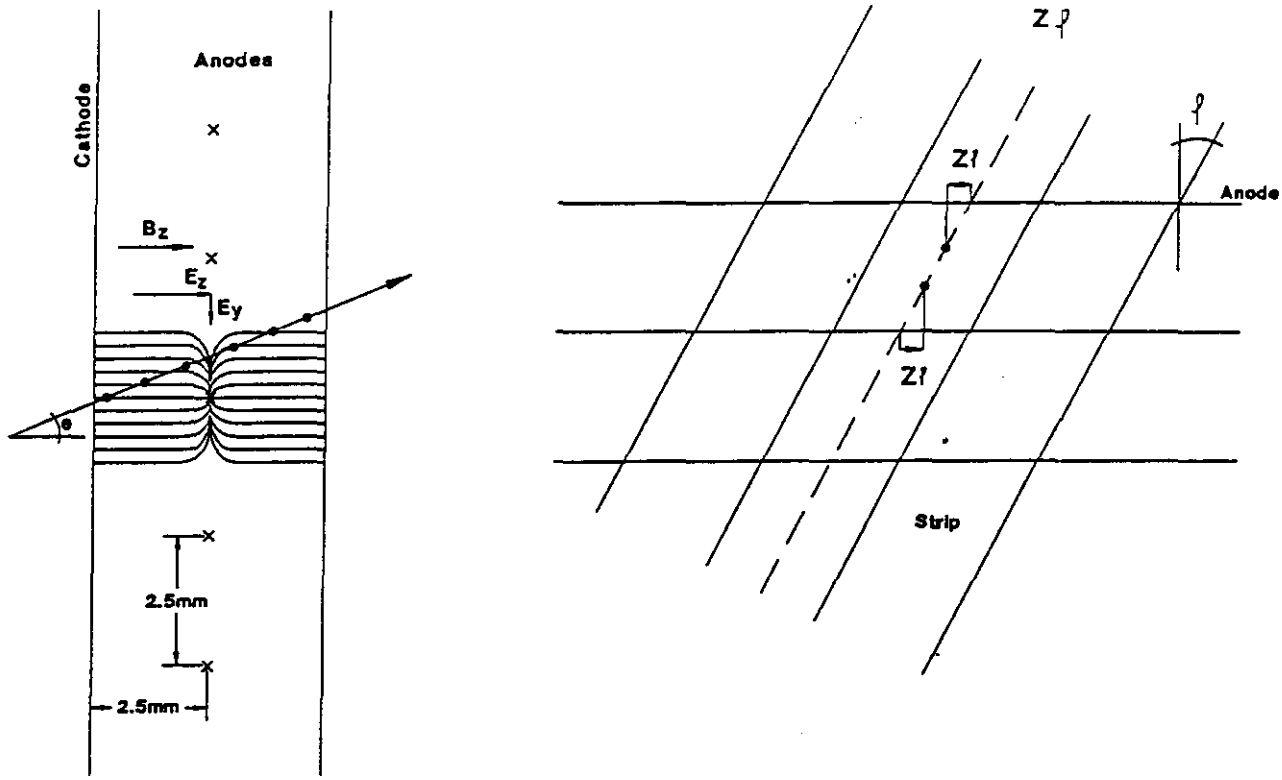

6a 6b

Figure 6: a) The basic PWC cell in the Endcap orientation; b The effect of the angle ϕ between anodes and radial strips.

3 The Endcap Case

In the Endcaps the analysis is not quite that simple. The field has a radial component as does the electric field. The drifting electrons have rather complicated trajectories to be described analytically. The principles, however, remain the same. We have used a detailed Monte Carlo simulation which calculates the resolution taking into account all the factors that affect it. In the results shown below only the effect of δ-electrons is not included.

The basic cell in the Endcap orientation is shown in Figure 6a. The z component of the drift velocity is affected by the radial component of the field. The resolution degradation is negligible, however, because the radial field, even with the flux concentrator, is never larger than $\approx$0.25 Tesla. The dominant contribution still comes from the axial component of the field especially for electrons drifting from the outer regions of the cell. In Figure 6b is shown an additional effect arising from the fact that the Endcap modules are trapezoidal and therefore the strips are not at right angles with the wires. This can cause a systematic shift which is proportional to the product of the tangent of the angle ϕ between the strips and the anode wires and the distance between the track and the nearest anode wire as shown in Figure 6b. Note that for tracks with a sufficiently large polar angle, θ, the primary ionization electrons could be collected by two adjacent anodes. Such a track is shown in Figure 6a.

The design of the endcap modules has a 16-fold symmetry imposed by the overall muon

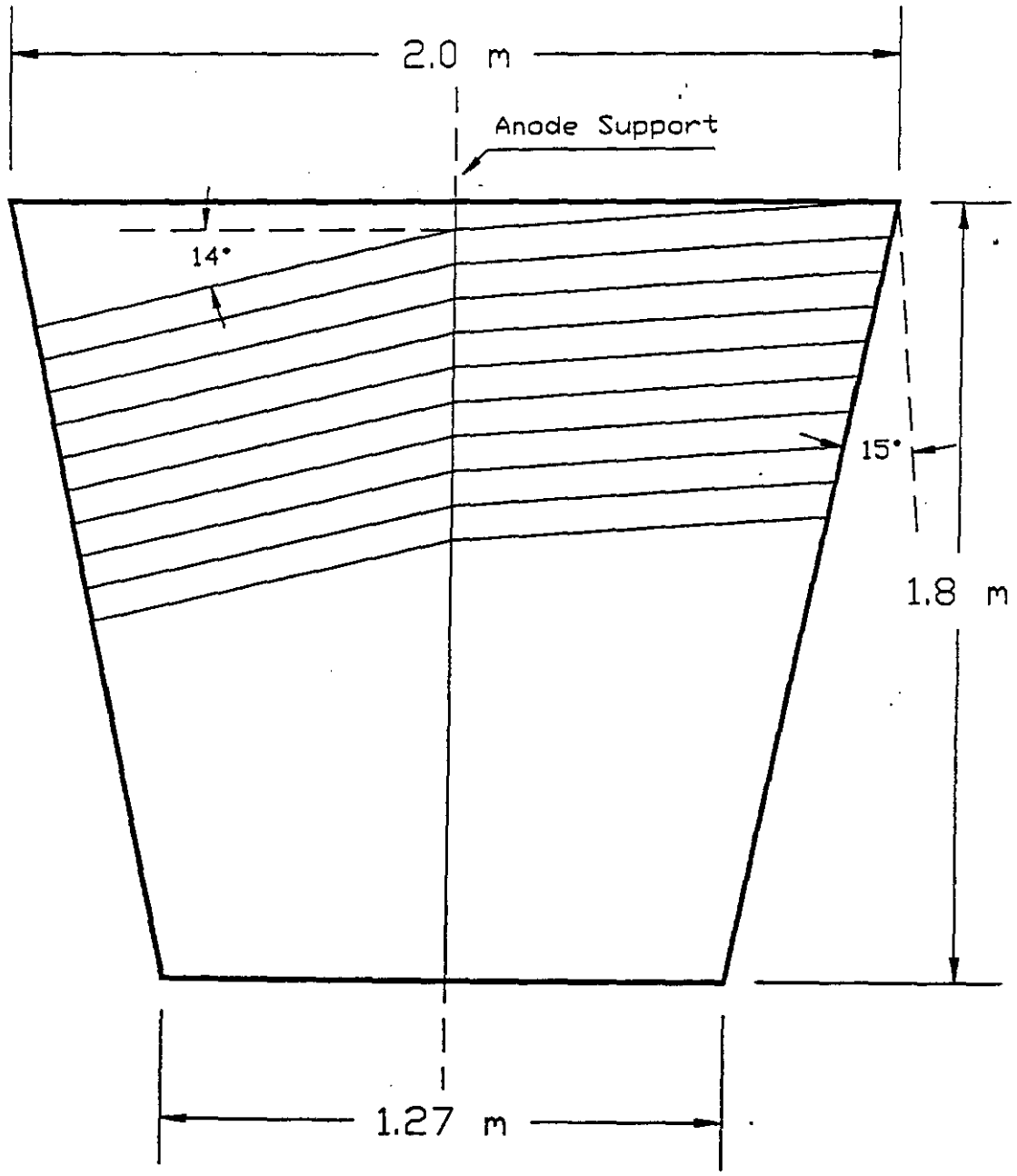

Figure 7: Wire placement to minimize effect of the angle between the anode wires and radial strips and the effect of the magnetic field.

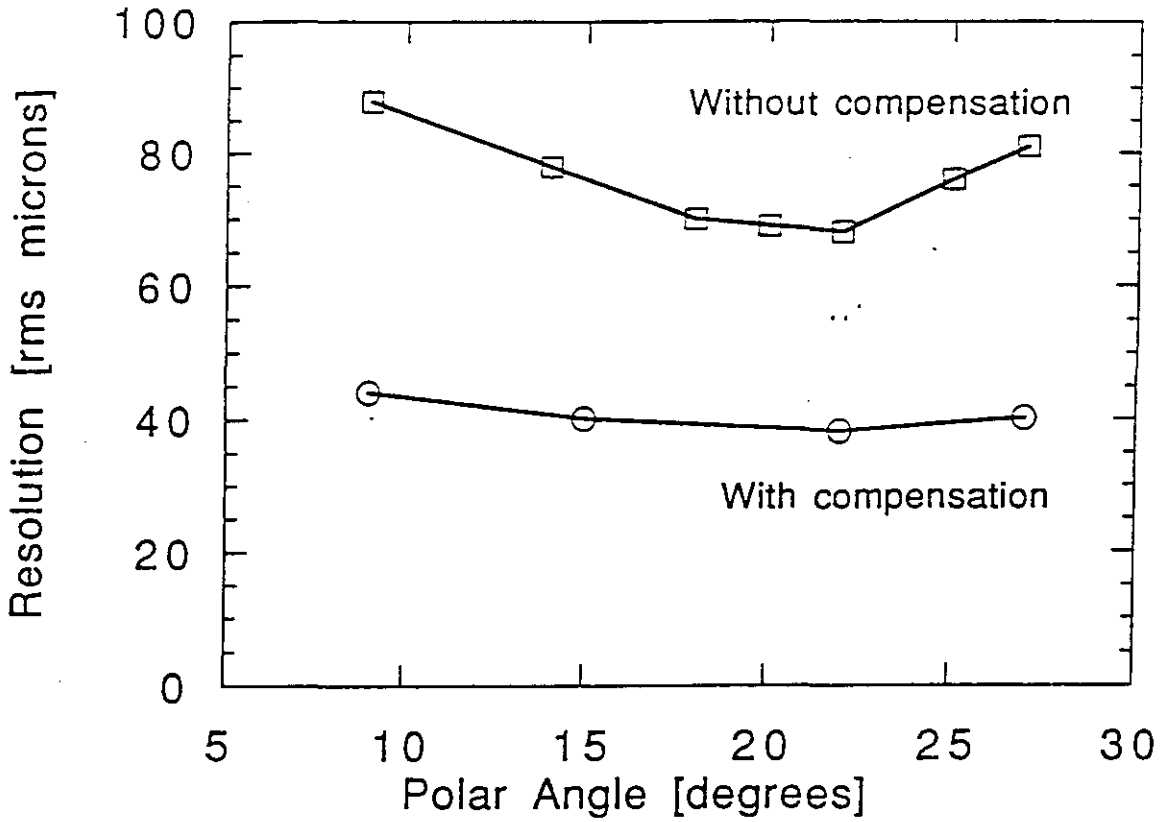

Figure 8: Resolution as a function of azimuthal angle in an Endcap sector with and without compensation for the Lorentz effect and angle ϕ.

system. However internally the symmetry is 32-fold reducing the effect of this angle. This is accomplished by supporting the wires at the symmetry axis of the trapezoidal sectors as shown in Figure 7. In any case this support is necessary for electrostatic stability as the anode wires, especially in the outer two superlayers, can be much longer than the $\approx$1m maximum length for stable operation. Recall that to compensate for the Lorentz effect in the Barrel one has to rotate the wires about an axis along the magnetic field and by an amount equal to the Lorentz angle. For the Barrel this resulted in "tilting" the modules. The same principle applied to the Endcap modules results in rotating the anode wires about the axial component of the magnetic field in the plane of the anodes. The wire placement to take into account both of the effects discussed above is shown in Figure 7. The resulting improvement of resolution is shown in Figure 8 where the resolution is shown with (lower curve) and without compensation for the Lorentz effect. These represent an average over all the modules of the Endcaps. The module-to-module difference is less than $\approx$10%.

References

[1] R. Debbe, *et al*, IEEE Transactions on Nuclear Science, Vol.37, No. 2, 1990.

[2] GEM Baseline 1, GEM TN-92-76, April 23, 1992.