GEM TN-92-136

X-Ray Test Station for Cathode Strip Muon Chambers

L. P. Lapina, P. M. Levchenko, A. I. Smirnov,
V. M. Suvorov, An. A. Vorobyov
St. Petersburg Nuclear Physics Institute

July 9, 1992

Abstract:

A proposal is presented to construct an X-ray diagnostic device which could measure all properties of the cathode strip chambers (CSC). It is shown that by using an appropriate cathode and a silicon crystal monochromator one can utilize hard enough X-rays (36 Kev) to penetrate an entire superlayer while maintaining spatial resolution of the order of 25 microns.

Petersburg Nuclear Physics Institute

L.P.Lapina, P.M.Levchenko, A.I.Smirnov,
V.M.Suvorov, An.A.Vorobyov

9 July 1992

X-RAY TEST STATION FOR CATHODE STRIP MUON CHAMBERS

(Proposal for construction)

One of the advantages of the cathode strip chambers is a possibility to perform complete tests and calibration of these chambers and assosiated electronics using an X-ray source. In particular, with this method one can make the amplitude calibration of each cathode channel and then make detailed calibration of the coordinate scale measuring the ratio $X_{measured}/X_{real}$ along the axis perpendicular to the cathode strips.

However, some complications arise because the cathode strip chambers contain some material (G10 plus the copper strips as shown in Fig.1) that absorbs low energy X-rays. On the other hand, one can not use higher energies directly because of too long ranges of the photoelectrons produced in the chamber gas. Further on we shall show that this problem can be solved by adding to the chamber gas (during the test) some amount of Xe and by choosing the X-ray energy just above the K-edge in Xe. To diminish a contamination by the long range electrons a monochromatic X-ray beam is desirable. For this purpose the X-ray tube will be equipped with a miniature double flat crystal monochromator. This monochromator will form the X-rays beam with low divergancy in one direction that is essential for a superlayer tests in one measurement.

CHOICE OF THE X-RAYS LINE; AN ESTIMATION OF THE IONIZATION CLUSTER SIZE

Concerning that the Xe K-edge energy equals to 34.561 keV, the most suitable X-ray line producing the shortest range photoelectrons is the K_{α_1}-line of praseodium with the energy 36.026 keV. The electron range (in argon) in the energy region of several keV can be estimated by the following formula:

$$R(cm) = 1.225 \cdot 10^{-3}\ E(keV)^{1.912}.$$

According to this formula the photoelectrons from the Xe K-shell have the range of about 25 μm only. To this one should add the subsequent radiation during the filling up of the K-shell vacancy. A simplified diagram of 36 keV X-ray absorbtion in Xe is shown in Fig.2. From this diagram it follows that in 70% of the Xe absorbtion events the maximum electron ranges are less than 150 μm and r.m.s.value of the ionization cluster center of gravity distribution should not exceed 50 μm. The relative yield of the long range electrons due to absorbtion in the working gas (Ar or CO_2) depends on the amount of Xe in the gas mixture. For 5% of Xe this contamination is 22% for Ar and about 5% for CO_2.

Another source of the long range electrons is the X-ray absorbtion in the copper layers. The range of the photoelectrons in copper is 1.2 mg/cm^2. The direction of emission is roughly perpendicular to the incoming photon direction but the multiple scattering quickly randomizes the motion (there will be around 30 collisions in the 1.2 mg/cm^2 layer of copper). For a conservative estimate we assume that half of the electrons produced in the two 1.2 mg/cm^2 layers of copper reaches the sensitive volume of the chamber. With such an assumption, the ratio of the useful events (Xe absorption) to the background events caused by the electrons from the copper layers is 1 to 1.75 for 5% Xe mixture

and 0.5 cm chamber gap. The relative abundance of the electrons in the chamber gas from different sources is demonstrated in Table 1 while Fig.3 shows the expected center of gravity distribution of the ionization clusters produced in the chamber gas. One can see from this figure that the signal/BG ratio is satisfactory, and it can be further improved by increasing the amount of Xe in the gas mixture.

TABLE 1

Ar + 5%Xe gas mixture

Absorption mode	%	Electron energy, keV	Range, mm
Xe K-shell		1.47	0.026
absorbtion	25.5	3.2-3.7	0.11-0.15
K X-ray transit.		0.4-0.6	<0.005
Xe K-shell		1.47	0.026
absorbtion	3.1	24.1-29.8	5.5-8.3
Auger transit.		0.4-3.7	0.002-0.15
Xe L,M,O,N-shells		29.1-3.6	
absorbtion	4.7	0.4-3.7	7.9-11.9
Ar absorbtion	9.3	328	9.9
Copper layer absorbtion	57	0-27	0-6.9

X-RAYS ABSORBTION IN THE CATHODE MATERIAL AND COUNTING RATES

The chamber design (4 gap concept) is shown in Fig.1. The calculated transmission coefficients K_{tr} are shown in Table 2. In the first column the gap position is listed. In the last one the counting rate for 25% Xe gas mixture is presented assuming the X-ray beam intensity of 10^3 photons/s. (The Xe absorbtion efficiency is 2% for one gap.)

TABLE 2

N°	K_{tr}	Count. rate, s^{-1}
1	0.691	14.7
2	0.477	10.1
3	0.330	7.0
4	0.228	4.8

X-RAY TUBE

At present we are going to use quite simple X-ray tube available at our lab. without a force-cooling system. The maximum current is 100 μA at the voltage 100 kV and the electron beam in the focus is 0.1 mm in diameter. The inner side of the tube window (Be) will be covered with praseodim. As the monochromator we are going to use the double flat crystal system in the so-called parallel position (see Fig.4). By a special cutting of the entrance surface of the silicon crystals (220 reflecting planes) the size of the beam will be diminished to 0.02 mm. This monochromator will select K_{α_1} (E_x = 36.026 keV) in the energy gap ΔE = 20 eV.The angular divergence of the beam is supposed to be about $5 \cdot 10^{-6}$ rad in one direction and 10^{-2} rad in the

perpendicular one. The induced quasimosaisity will be about $4 \cdot 10^{-5}$ rad. Under these conditions about 10^3 quanta/s in the beam are expected. To increase further the intensity, some more powerful tubes could be used (changing the circular focus into linear one and using a force-cooling system let to increase the current by nearly two orders of magnitude).

TEST STATION

A sketch of the test station is shown in Fig.5. The tested chamber (or the chamber superlayer) (1) is placed on the support so that the anode wires are oriented vertically. The X-ray tube with the crystal monochromator (2) is mounted in such a way that the X-ray beam (narrow in Y-direction) should be parallel to the cathode strips. The tube is fixed at a carriage which moves vertically on a pair of precision rails, that in turn can be moved in the horizontal direction along the horizontal rails. The vertical coordinate of the beam is supposed to be known with 10 μm precision and the horizontal coordinate with 50 μm precision. Two options to control the coordinates are now under consideration. In the first option the necessary accuracy is provided using precise mechanical parts. In the second option a high precision optical tracing system will be used to measure the X-ray tube position.

MEASUREMENT

The tests will consist in scanning along the vertical axis at one or several X-coordinates. The scanning could be in steps of 1 mm. If we collect ~200 events at each point, this makes it possible to calibrate each amplitude channel with precision of 1% and to determine Y-coordinate (Y measured) with precision of 10-20 μm. With counting rates presented in Table 2 this would require ~20 s per point or 6 hours for 1 meter long scan. Note that all chambers in the superlayer will be tested simultaneously during this scan.

MODULE

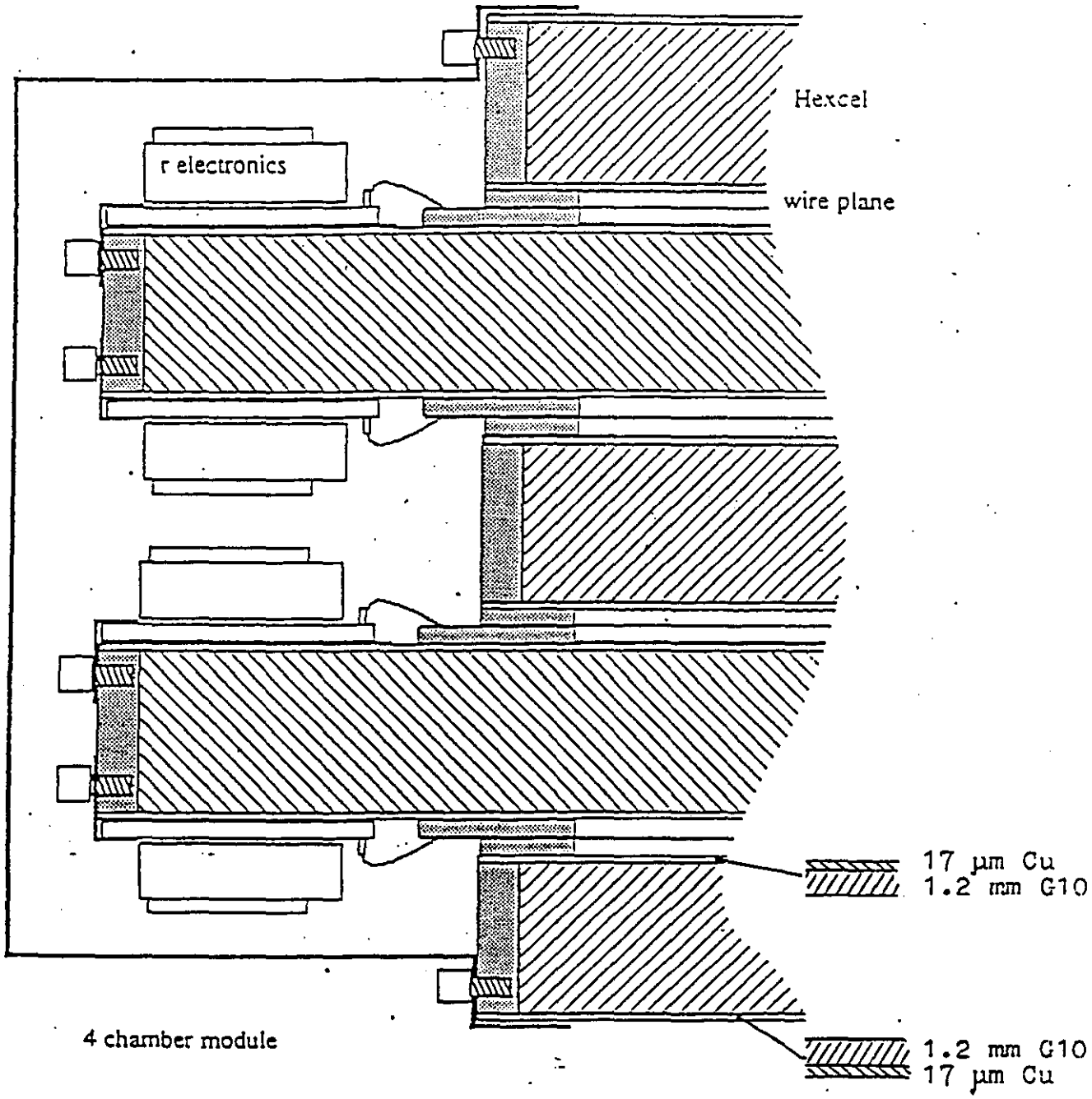
Hexcel
r electronics
wire plane
17 µm Cu
1.2 mm G10
4 chamber module
1.2 mm G10
17 µm Cu

Fig.1

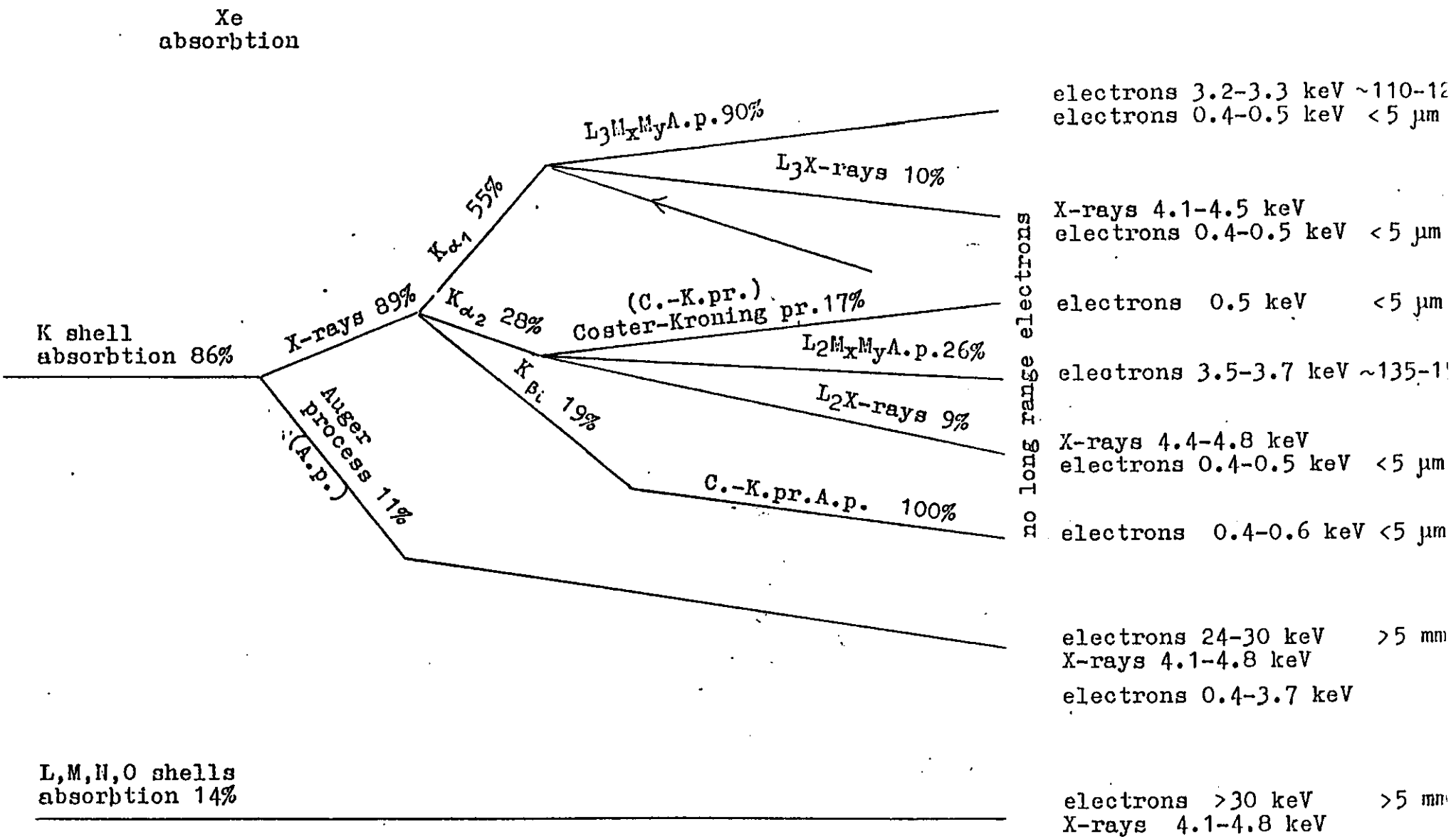
Xe
absorbtion
K shell
absorbtion 86%
X-rays 89%
Auger
process 11%
(A.p.)
K_{α_1} 55%
K_{α_2} 28%
K_{β_i} 19%
$L_3M_xM_yA.p.$ 90%
L_3X-rays 10%
(C.-K.pr.)
Coster-Kroning pr. 17%
$L_2M_xM_yA.p.$ 26%
L_2X-rays 9%
C.-K.pr.A.p. 100%
no long range electrons
electrons 3.2-3.3 keV ~110-12
electrons 0.4-0.5 keV <5 μm
X-rays 4.1-4.5 keV
electrons 0.4-0.5 keV <5 μm
electrons 0.5 keV <5 μm
electrons 3.5-3.7 keV ~135-1
X-rays 4.4-4.8 keV
electrons 0.4-0.5 keV <5 μm
electrons 0.4-0.6 keV <5 μm
electrons 24-30 keV >5 mm
X-rays 4.1-4.8 keV
electrons 0.4-3.7 keV
L,M,N,O shells
absorbtion 14%
electrons >30 keV >5 mm
X-rays 4.1-4.8 keV

Fig. 2

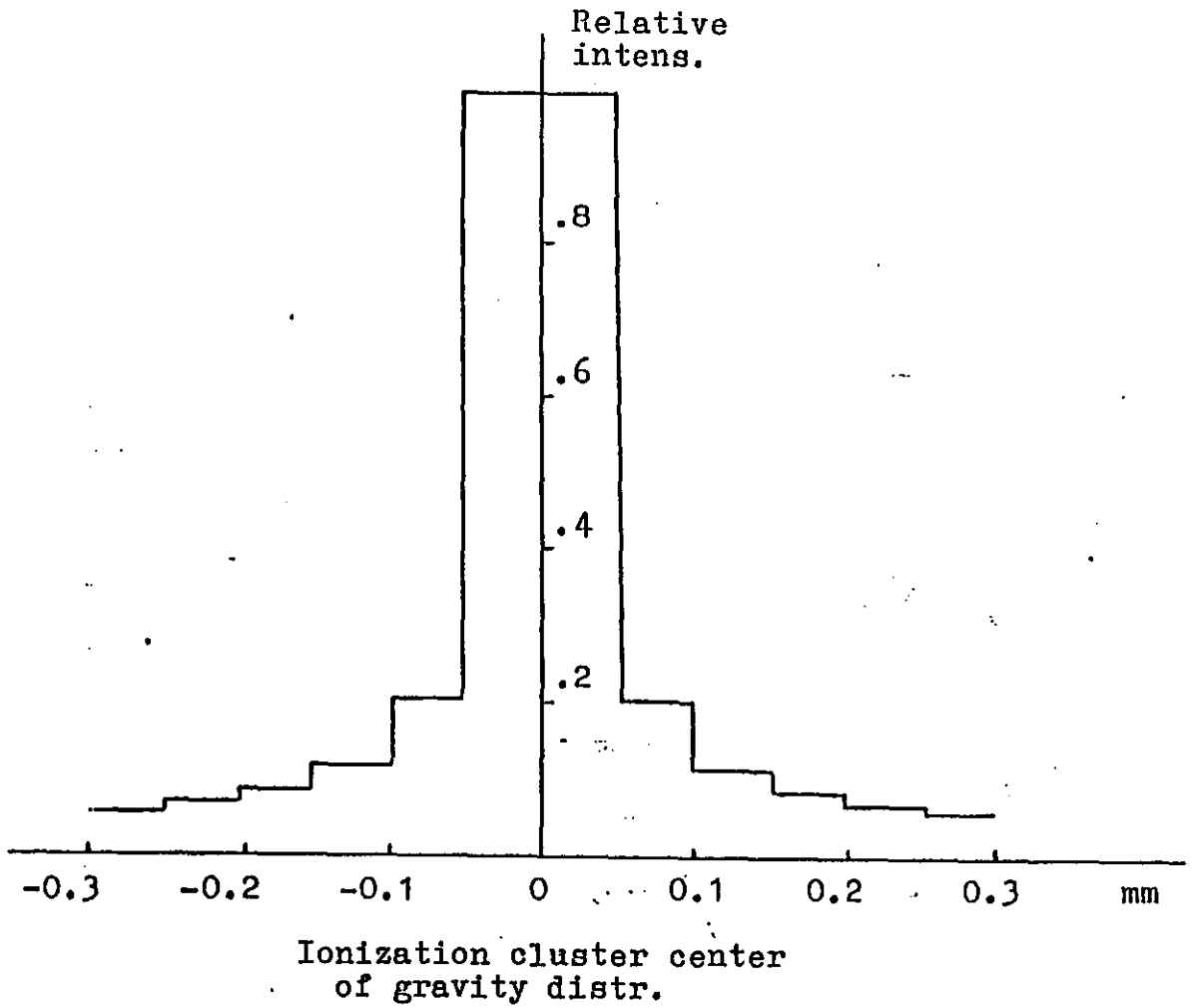
Relative
intens.
.8
.6
.4
.2
-0.3
-0.2
-0.1
0
0.1
0.2
0.3
mm
Ionization cluster center
of gravity distr.

Fig.3

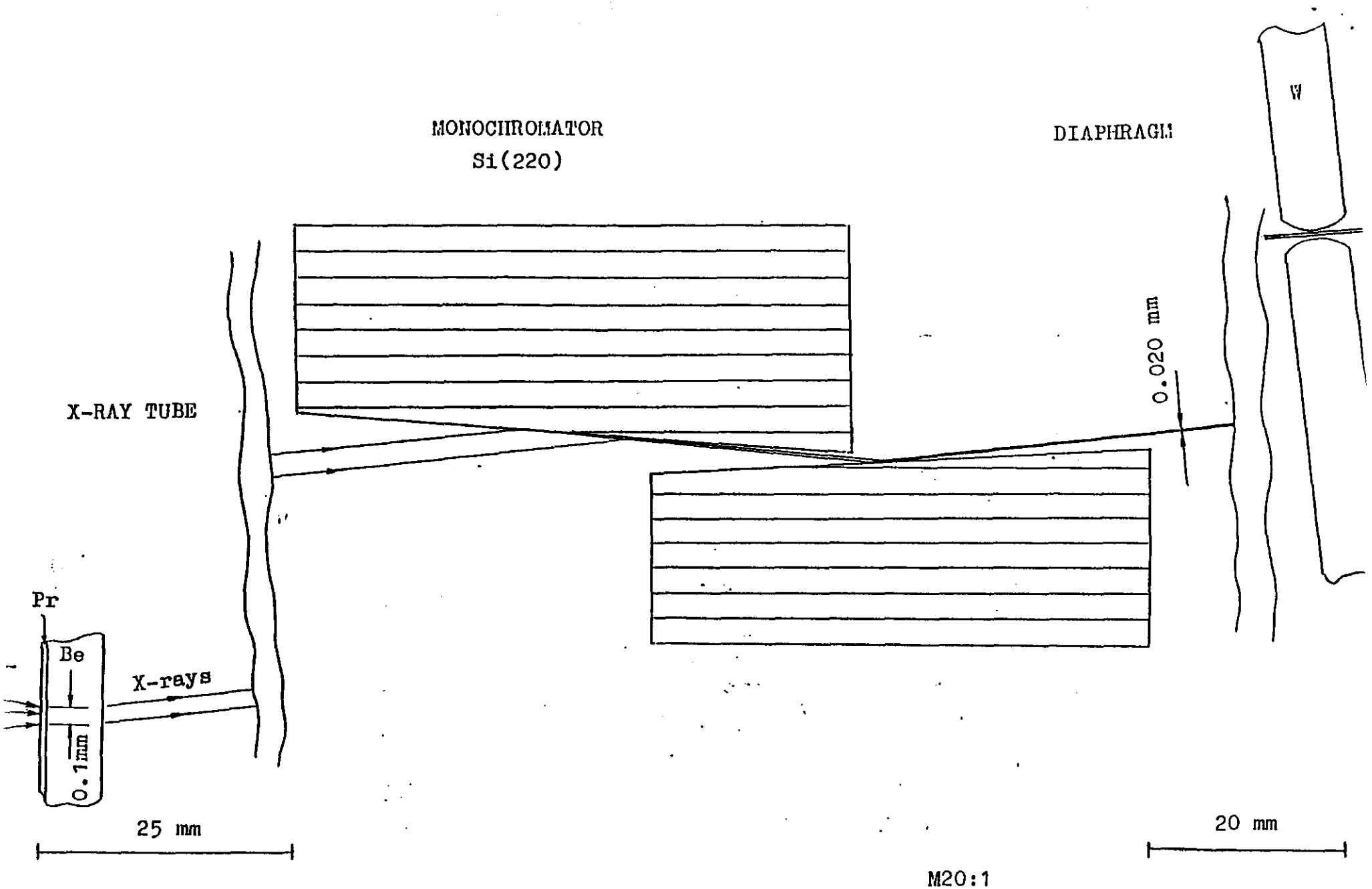
MONOCHROMATOR
Si(220)
DIAPHRAGM
W
X-RAY TUBE
0.020 mm
Pr
Be
X-rays
0.1mm
25 mm
20 mm
M20:1

Fig.4

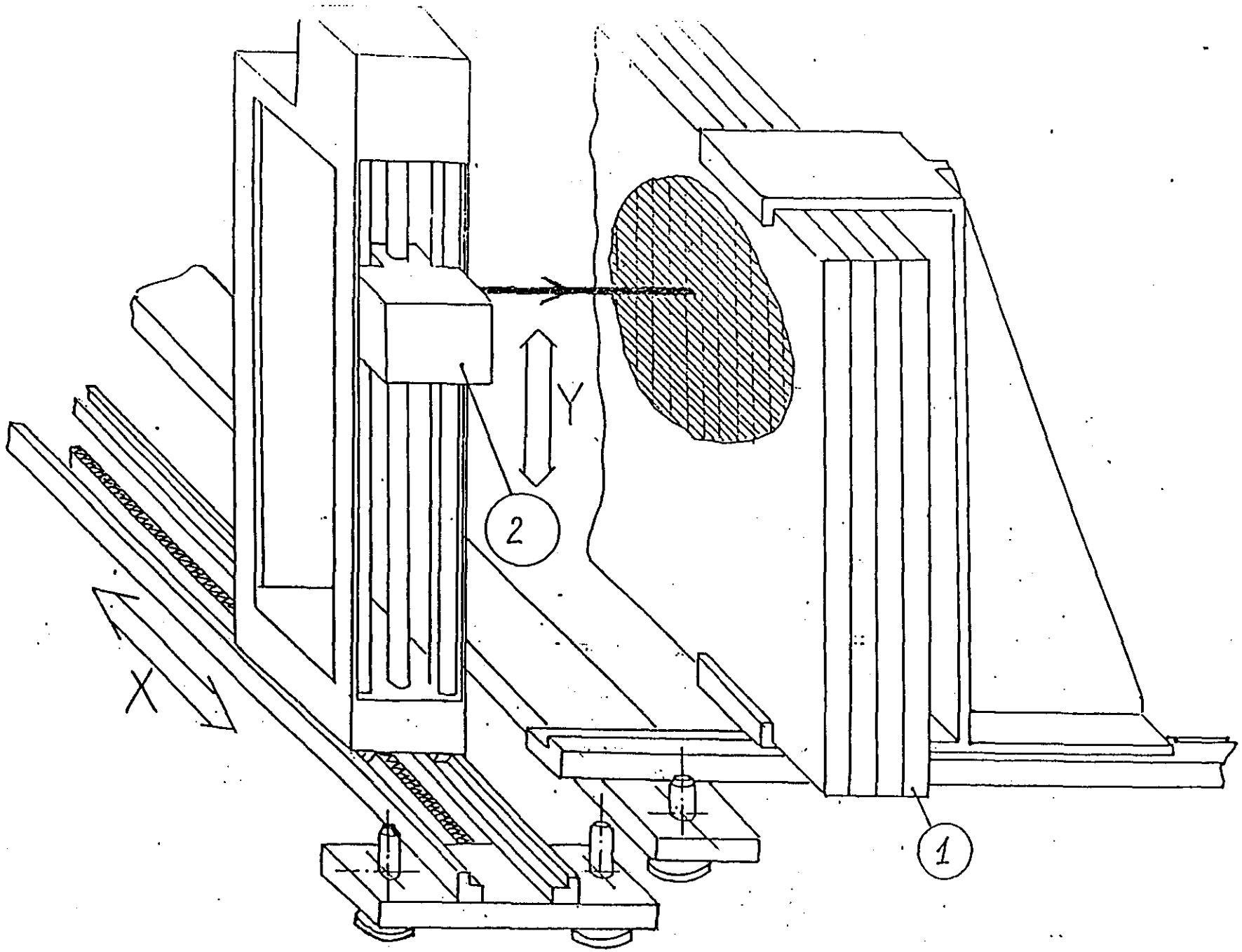

Fig.5