GEM TN-92-117
HWB-92-007

Muon Engineering Status Meeting - Draper

June 17, 1992

Abstract:

The agenda, attendees, and transparencies of the GEM Muon Engineering Status Meeting held on June 17, 1992 at Draper Laboratory are presented. Agenda items: Remarks - Frank Taylor; Overview-Draper Activities; Brief Outline of 'Cost' Presentation for Next Week's Meeting at SSCL; Prep for PAC Meeting; and Review/New Action Items.

Attendance List

ATTENDEES LIST-GEM MUON ENGINEERING MEETING 17 June 1992

NAME	ORG	TEL#	FAX#	E-MAIL
HOWARD BAKER	DRAPER	(617) 258-3411	(617) 258-1333	h baker@draper.com
RICH MARTORANA	"	258-3959	258-4238	
SCOTT WHITAKER	BU	353-8916	353-9393	SCOTT@BUPHYC
ANTHONY KONDOLEON	DRAPER	258-1537	258-4238	KONDO@DRAPER.COM
Joe Pohlen	Martin	303 971 9584	971-4238	SSCVXI :: Pohlen
Frank Nimblett	DRAPER	617-258-1393	258-1133	NIMBLET@DRAPER.COM
DICK GUSTAVSON	DRAPER	617-258-2914	617-258-1131	REG2914@DRAPER.COM
[illegible]	"	[illegible]		[illegible]
Frank Taylor	MIT	617-253-7245	617-253-7755	FET@MIT.EDU

AGENDA

GEM MUON ENGINEERING STATUS MEETING

AT DRAPER
(ROOM 2278)

3PM--17 JUNE 1992

1)	REMARKS	F. TAYLOR	5 MIN
2)	OVERVIEW-DRAPER ACTIVITIES	H. BAKER	5 MIN
3)	BRIEF OUTLINE OF 'COST' PRES FOR NEXT WEEK'S MEETING AT THE SSCL	GUSTAVSON/NIMBLETT	5 MIN
4)	PREP FOR PAC MEETING		
	A) MUON SYSTEM DESIGN	F. NIMBLETT/ET EL	
	B) MUON SYSTEM ALIGNMENT	J. PARADISO	
6)	REVIEW/NEW ACTION ITEMS	ALL	
7)	SET AGENDA FOR NEXT WEEK	ALL	
8)	ADJOURN		

H. Baker/Draper

6/17/92
HWB

OVERVIEW

NEAR TERM TASKS

I. COST REVIEW UPDATES
   1) PRESENTATION STATUS FOR 6/23-24 COST MEETING
   2) NEW INFO FROM WUEST ON RPCs/BROMBERG ON PDTs

II. BASELINE II & PAC
   1) NEW TEXT FOR MAJOR SECTIONS
   2) UPDATED MILESSTONES
   3) FLUX CONCENTRATOR AT 9.4 DEG & NONPROJECTIVE
      -NEW B-FIELD CALCULATIONS
      -NEW RESOLUTIONS SIMS
   4) BARREL-KEEP 8-8-4 CONFIG
   5) ENDCAPS-COST AND 8-8-4 CSC CONFIG
   6) UPDATE DRAWINGS OF CHAMBER CONSTRUCTION
      -REQUEST HAS BEEN MADE OF THE TECH-PROPONENTS
   7) SUPPORT STRUCTURE
      -DETAILS OF TRUSS WORK/BARRELS&END-CAPS
   8) DEPLOYMENT OF CHAMBERS IN SUPPORT STRUCTURE
      -OVERLAP/NON-OVERLAP
      -COVERAGE
      - LEVER ARM
      - MATERIAL DISTRIBUTION
   9) UPDATED TABLES
      - CHAMBER WEIGHTS
      - CHANNEL COUT
      - GAS VOLUMES
   10) ALIGNMENT SYSTEM
      - TABLE OF REQ (TOLERANCE FOR ALL DIMENTIONS
      - COMPARISON OF ALIGNMENT TECHS
      - ALIGNMENT PATHS DELINEATED ON SUPPORT STRUCTURE
      - MATRIX OF TRANSFERS
   11) UPDATED SIMULATION
      - BACKGROUNDS (WITH NEW CALORIMETER
      - TRIGGER
      - RESOLUTIONS (8-8-4 IN ENDCAPS, NEW FC)

GEM MUON System Engineering Schedule for PAC Status Report
Draper Activities

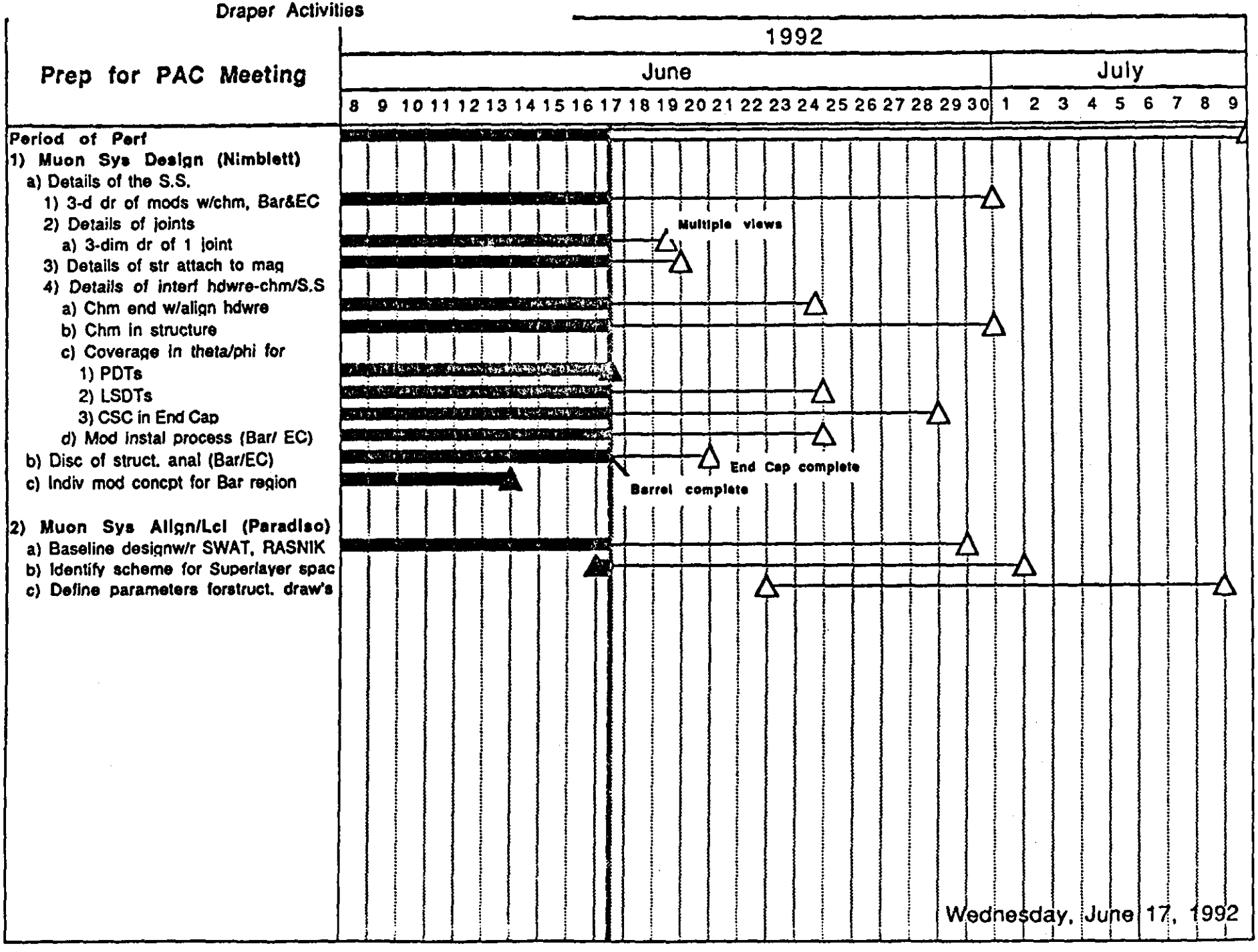

6/17/92
HWB

OVERVIEW

NEAR TERM TASKS

I. COST REVIEW UPDATES
- 1) PRESENTATION STATUS FOR 6/23-24 COST MEETING
- 2) NEW INFO FROM WUEST ON RPCs/BROMBERG ON PDTs

II. BASELINE II & PAC
- 1) NEW TEXT FOR MAJOR SECTIONS
- 2) UPDATED MILESSTONES
- 3) FLUX CONCENTRATOR AT 9.4 DEG & NONPROJECTIVE
  - -NEW B-FIELD CALCULATIONS
  - -NEW RESOLUTIONS SIMS
- 4) BARREL-KEEP 8-8-4 CONFIG
- 5) ENDCAPS-COST AND 8-8-4 CSC CONFIG
- 6) UPDATE DRAWINGS OF CHAMBER CONSTRUCTION
  - -REQUEST HAS BEEN MADE OF THE TECH-PROPONENTS
- 7) SUPPORT STRUCTURE
  - -DETAILS OF TRUSS WORK/BARRELS&END-CAPS
- 8) DEPLOYMENT OF CHAMBERS IN SUPPORT STRUCTURE
  - -OVERLAP/NON-OVERLAP
  - -COVERAGE
  - - LEVER ARM
  - - MATERIAL DISTRIBUTION
- 9) UPDATED TABLES
  - - CHAMBER WEIGHTS
  - - CHANNEL COUT
  - - GAS VOLUMES
- 10) ALIGNMENT SYSTEM
  - - TABLE OF REQ (TOLERANCE FOR ALL DIMENTIONS
  - - COMPARISON OF ALIGNMENT TECHS
  - - ALIGNMENT PATHS DELINEATED ON SUPPORT STRUCTURE
  - - MATRIX OF TRANSFERS
- 11) UPDATED SIMULATION
  - - BACKGROUNDS (WITH NEW CALORIMETER
  - - TRIGGER
  - - RESOLUTIONS (8-8-4 IN ENDCAPS, NEW FC)

Action Items, Muon Eng Status Meeting-update 6/10/92

Action Item# (5/20 mtg)	Action Item	Assignee	Due Date	Notes
5-20-1	We need interface drawings specifying stay-clear regions between magnet and support structure and calorimeter. Drawings are also needed to specify the chamber mounting concept. What support structure is needed for the barrel (graphite frame as envisioned fot the RPC.)	F. Nimblett	TBD 6/3	Nimblett to generate a list of required info. Letter to be sent on 5/28 to Harris/Sanders. Reqest info available 6/3. Som info sent. On-going to TDR.
~~5-20-2~~	~~It was suggested that the barrel chamber configuration be changed to 4:8:4 for costing. The resolution performance will also have to be evaluated for this configuration.~~	~~A. Kondoleon~~	~~5/27~~	~~Complete~~
5-20-3	The details of the chamber coverage needs to be worked out in the region between sectors. For the PDT's, how many tube layers will there be in that reqion, and what is the dead space? For the LSDT's, what is the dead space in that region? We need blow-up drawings of this corner, indicating the attachment of the chambers and the dead space.	F. Nimblett	5/27	In process-Kelsey to provide drawings
5-20-4	~~We need to get the deflection specification of the cryostat. How much out of round, stability of the length of the magnet.....Suggest that the requested information be written in a memo and sent to Mike Harris, Livermore, Mike Marx~~	~~F. Nimblett~~	~~5/28~~ ~~6/3~~	~~Draft to be presented 5/27. To be sent on 5/28. Info needed 3 Jun~~
5-20-5	~~Are there any structural members in the present space frame design which bare no load?~~	~~M. Furey~~	~~5/27~~	~~None. Complete~~
5-20-6	Reaction to Jacques Pier-Amory's proposal for installation of chambers. Practical?, Cost effective?	A. Kondoleon		On-going

These items connected

Action Item#	Action Item	Assignee	Due Date	Notes
5-20-7	What savings will result from construction of the FFS using non-tapered iron plates? What is the results of the resolution, L-angles, nonuniform magnetic field?	J. Sullivan	TBD	On-going. It appears manufactorir requires taper.
~~5-20-8~~	~~We need to review the need for removing chambers? Should this be a design goal? What is the associated cost to build in this feature?~~	~~A. Kondoleon~~	~~TBD~~ ~~6/5~~	~~For CSC mandatory. Depends upon technology. Discussions at muon mtg on 6/5; YES~~
5-20-9	~~For alignment, there is a need to specify the dynamic range needed for the straightness monitors. Photopots may not work in the B field. Need another technology.~~	~~J. Paradise~~	~~5/27~~	~~Discussions on going w/SDC 2mm dynamic raange of the quad cell baseline.~~
5-20-10	~~A decision has to be made soon about what alignment apparatus we should have for the TTR this summer. The May 22 meeting should focus on this issue.~~	~~J Paradise~~	~~5/27~~	~~Per FET, this action will only be a transfer of information.~~
5-20-11	~~The technology proponents are requested to supply updated cost information by May 22. May 27 is the deadline by which info has to be sent to SSCL.~~	~~R. Gustavson~~	~~5/27~~	~~Completed~~
5-20-12	~~A need has been indicated for a master organizational chart for the Muon sub system.~~	~~H. Baker~~	~~5/27~~ ~~6/5~~	~~1st Draft delayed to following week. Latest version shown at mtg, 6/10. Await Harris' response.~~

Action Items, Muon Eng Status Meeting-update 6/10/92

Action Item# (5-27 mtg)	Action Item	Assignee	Due Date	Notes
~~5-27-1~~	~~Provide draft input to TRD~~	~~J. Paradiso~~	~~5/29~~	~~Complete~~
5-27-2	Provide baseline drawing of alignment concept. Determine quantization.	J. Paradiso	PAC mtg	On-going
(6-10 mtg)	Following A/Is are due post PAC mtg; allow approach for mtg to proceed.			
6-10-1	Evaluate feasibility of improving theta acceptance for the LSDT chamber option.	J. Kelsey	Post PAC meeting	L. shape structural support piece is in the way. Make it smaller an if possible, a better fit with the space.
6-10-2	Chamber end gap=150mm. Send letter to Harris with copies toMarx, Deis, Johnson, Pohlen to voice concern over this and recommend that the gap stay where it is at a minimum	F. Nimblett	Post PAC meeting	
6-10-3	Explain rationale for selecting a 16-fold symmetry.	F. Nimblett	Post PAC meeting	
6-10-4	Letter Marx to indicate concern over the approach of splittin up the muon system and promoting a scenario which takes the whole endcap moun system out with the FFS, perhaps even permanently attached to the FFS.	F. Nimblett	Post PAC meeting	
no Formal A/Is for 6/17				

12

6/17/92
HWB

NOTES FOR MUON ENG STATUS MEETING

DRAPER ONLY

- NEW ACCOUNT NUMBERS WERE SENT A FEW DAYS AGO
    - USE THEM !!

- DRAFT TASK AGREEMENTS ARE ON THE WAY (OUT TOMORROW)
    - TALK TO LISA BRENNEN ABOUT CHANGING THE PMS SHEETS
    - PRETTY MUCH EVERYTHING IS NEGOTIABLE EXCEPT THE BUDGET

- TASK LEADERS TO SUBMIT TO BAKER STATUS BULLETS BY THE END OF EACH MONDAY
    - 1 PAGE-KEEP IT TOP LEVEL
        - NOTE ISSUES/CONCERNS
    - NIMBLETT TO PROVIDE ONLY A COPY OF HIS NORMAL STATUS REPORT WITH EXPLETIVES DELETED

ALL

- RECEIVED REQUEST FOR INPUTS TO HAZARD ANALYSIS REPORT (TODAY)
    - DUE TODAY
    - BAKER HAS A PROBLEM WITH THIS-
        1) NOT ON HIS LIST OF PRIORITIES
        2) NOT ON HIS SOW
        3) FET & HWB-CAN WE TALK?

Frank Nimblett/Draper

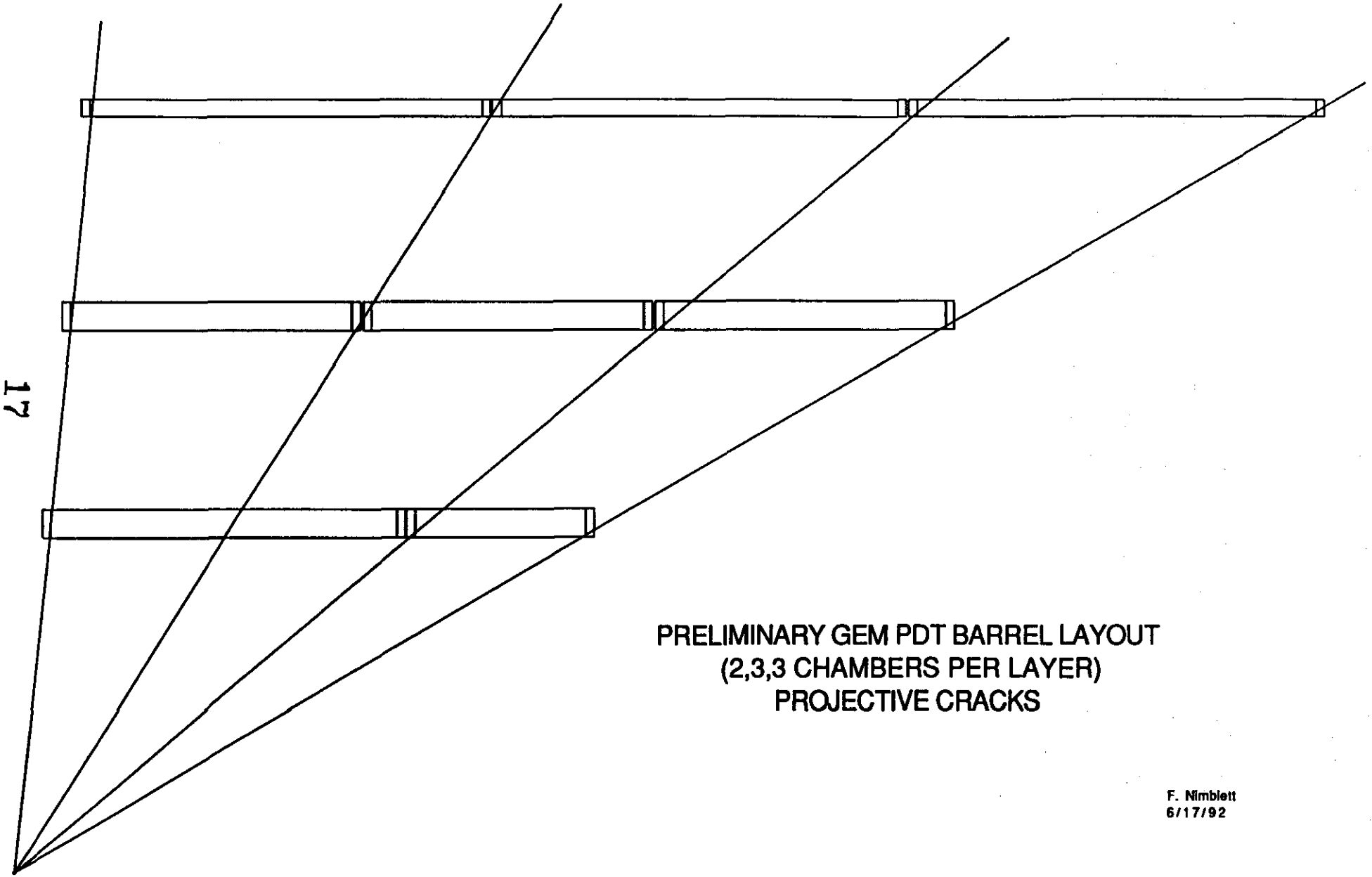

PRELIMINARY GEM PDT BARREL LAYOUT
(2,3,3 CHAMBERS PER LAYER)
PROJECTIVE CRACKS

F. Nimblett
6/17/92

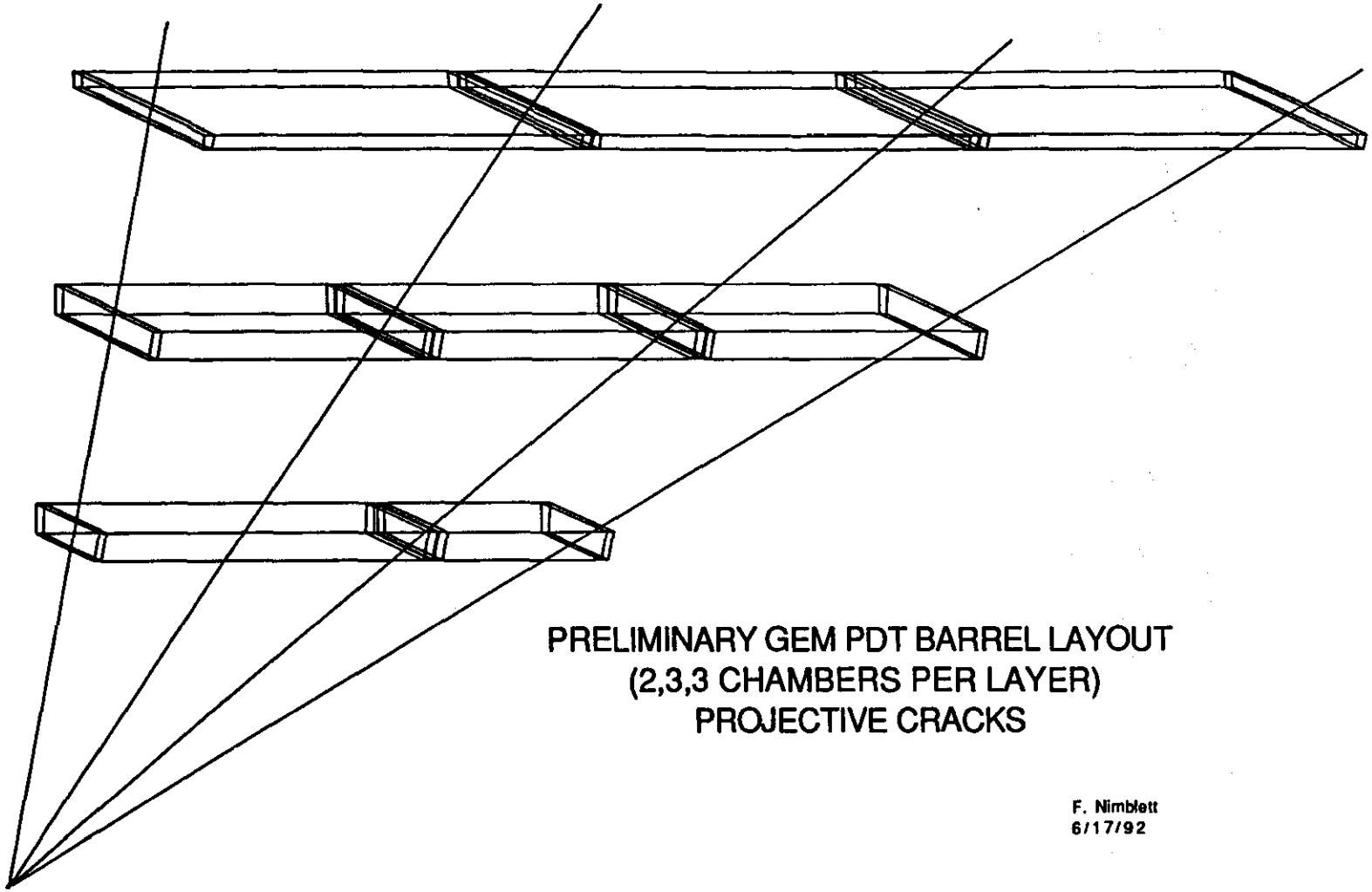

PRELIMINARY GEM PDT BARREL LAYOUT
(2,3,3 CHAMBERS PER LAYER)
PROJECTIVE CRACKS

F. Nimblett
6/17/92

Mechanics	Z-Clear	Angle Lost within barrel	Angle Lost Membrane	Angle Lost barrel/endcap	Total Lost Angle	Angle Covered Barrel	% Covered of Covered
100.00	25.00	0.1240	5.9950	1.8860	6.1190	54.7943	0.9977
125.00	25.00						
150.00	25.00						
175.00	25.00						
200.00	25.00						
225.00	25.00						
250.00	25.00						
275.00	25.00						
Membrane loss =	5.60	Degrees					

Will Have Remainder tommorow!

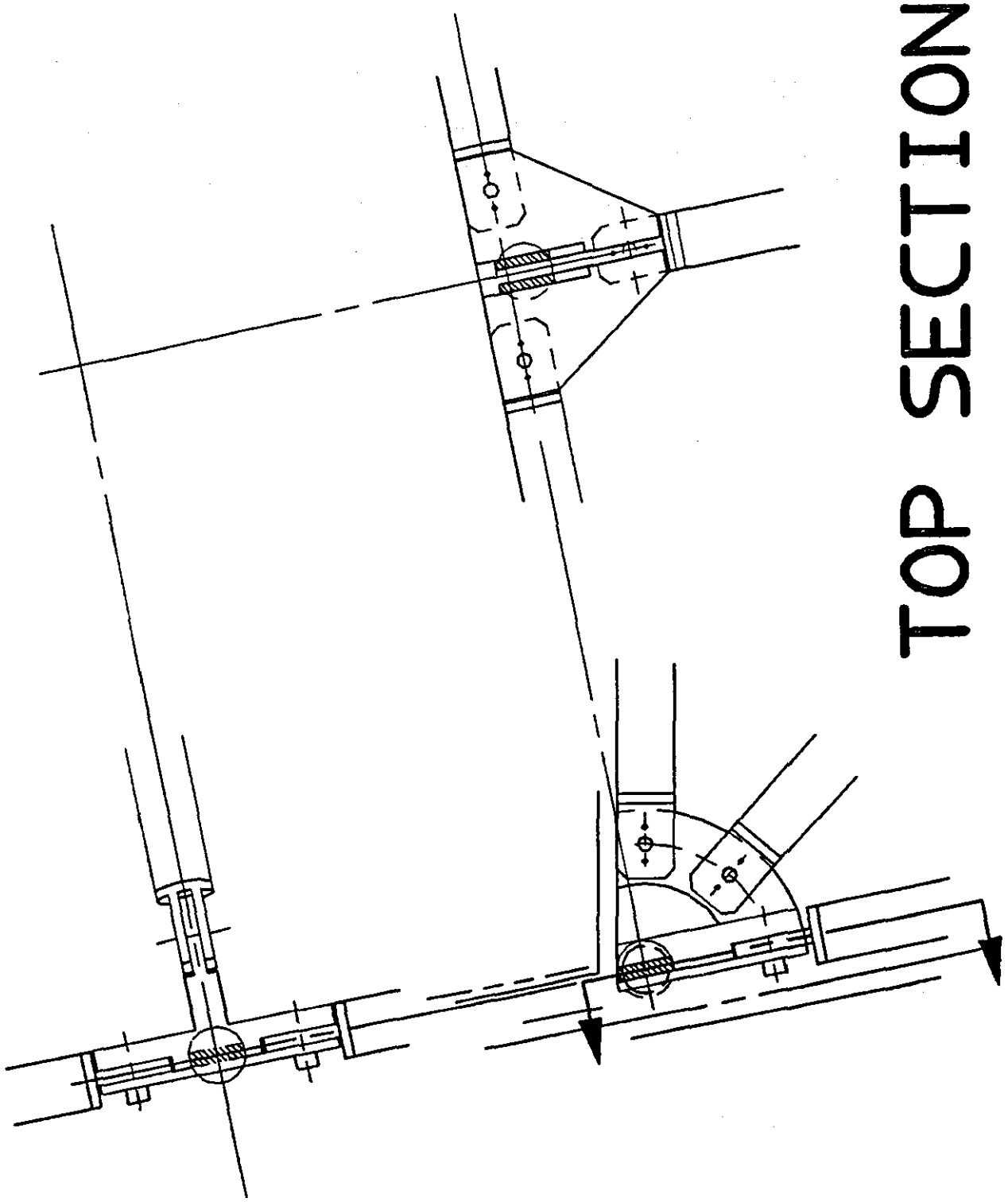
TOP SECTION

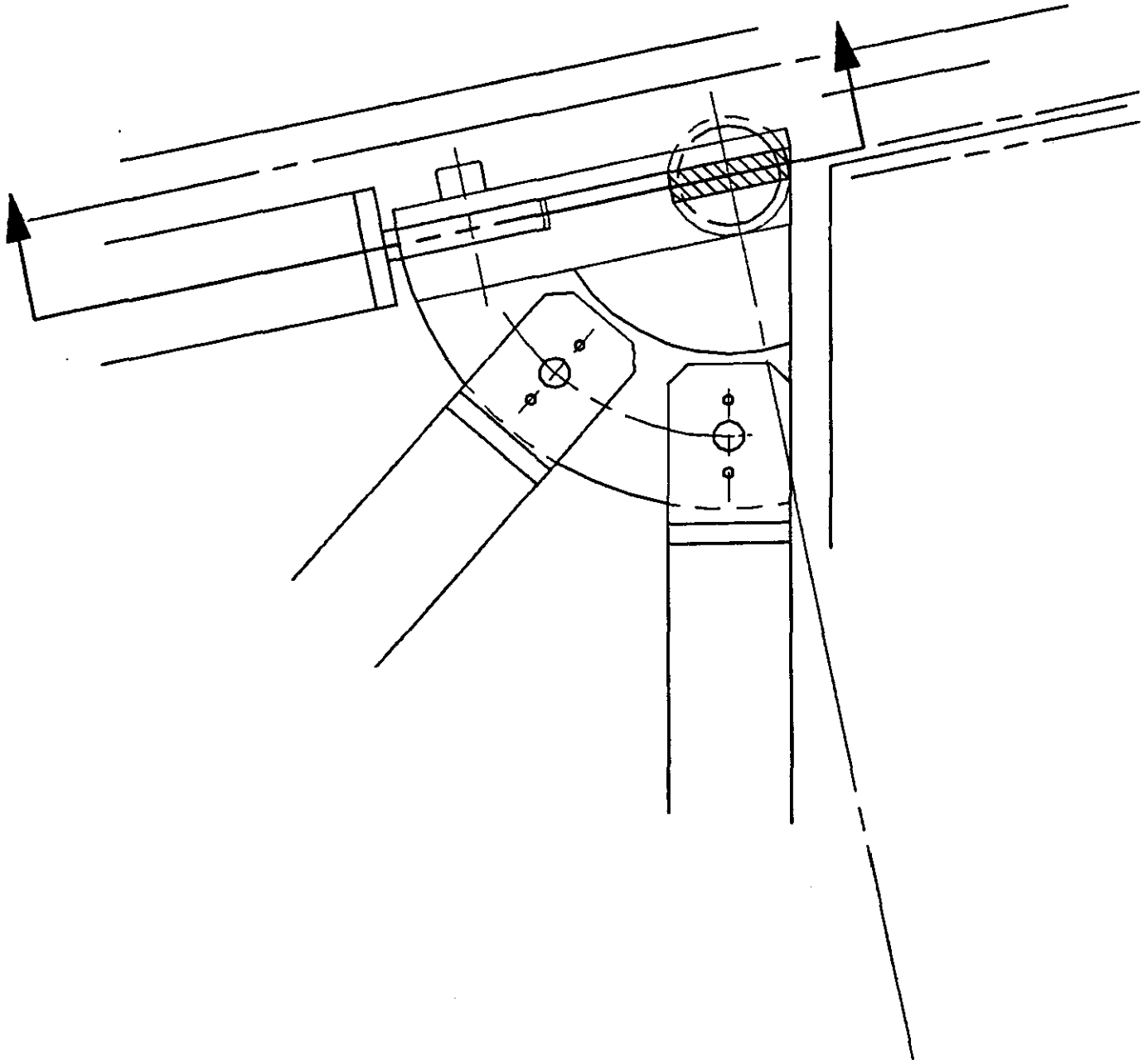

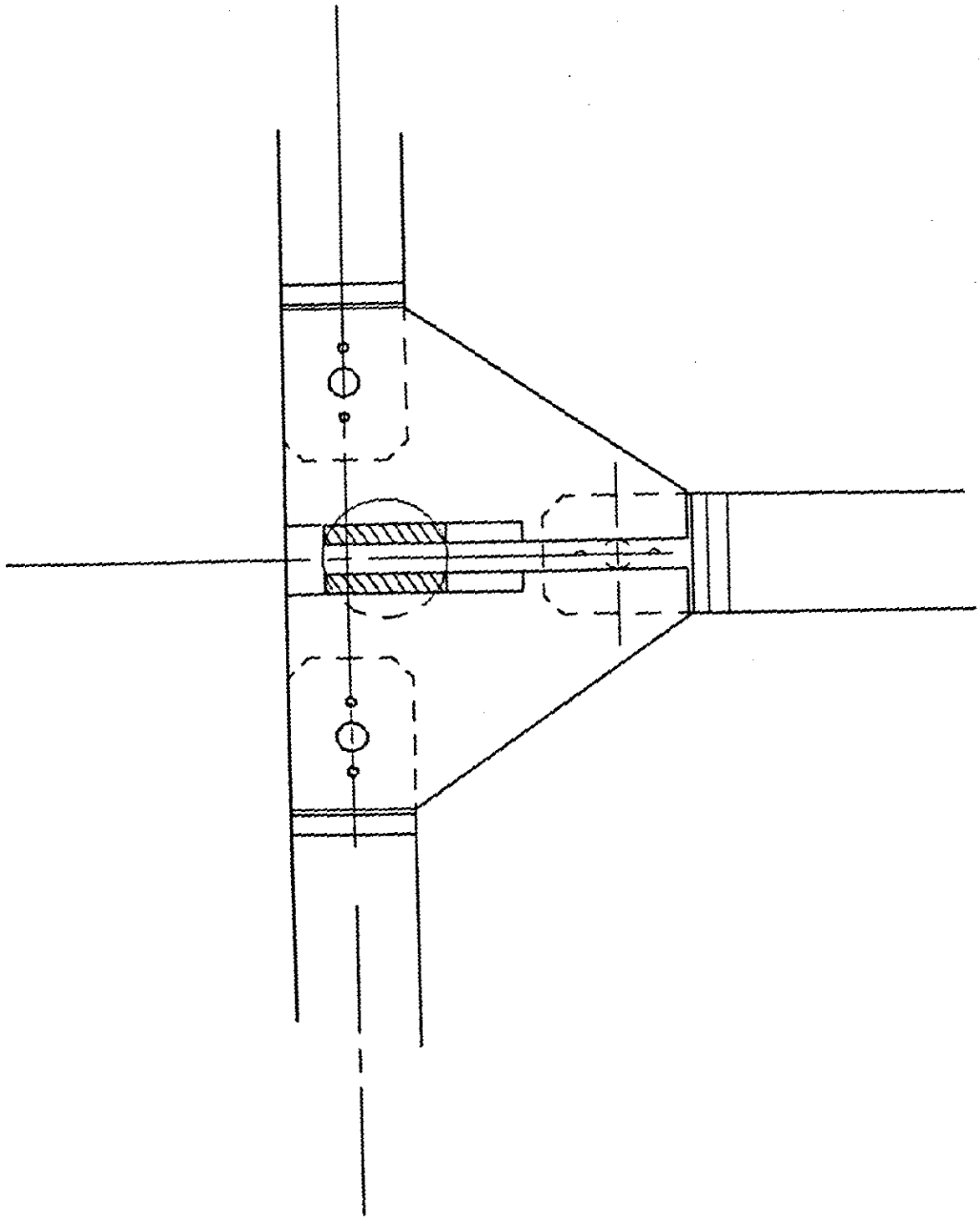

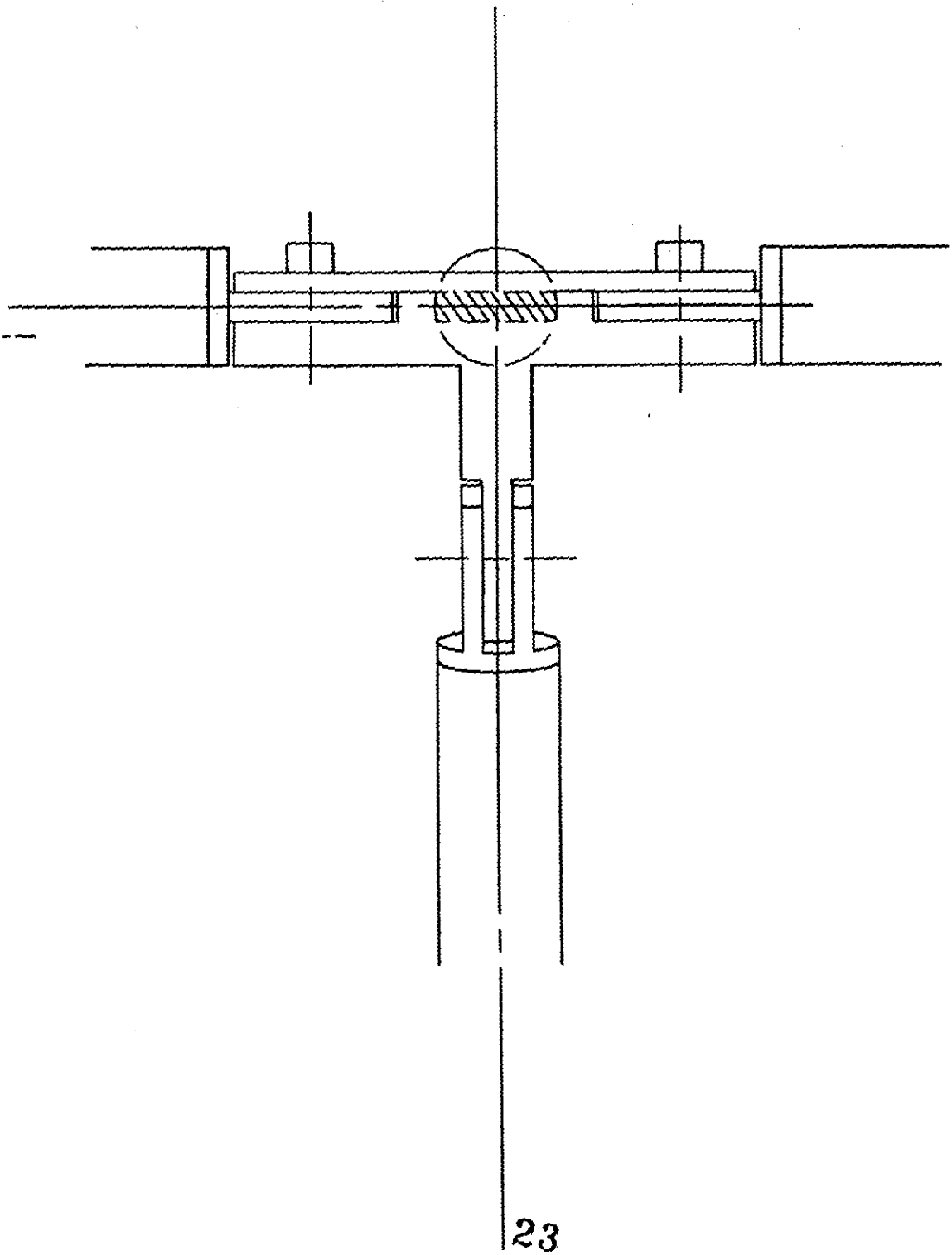
23

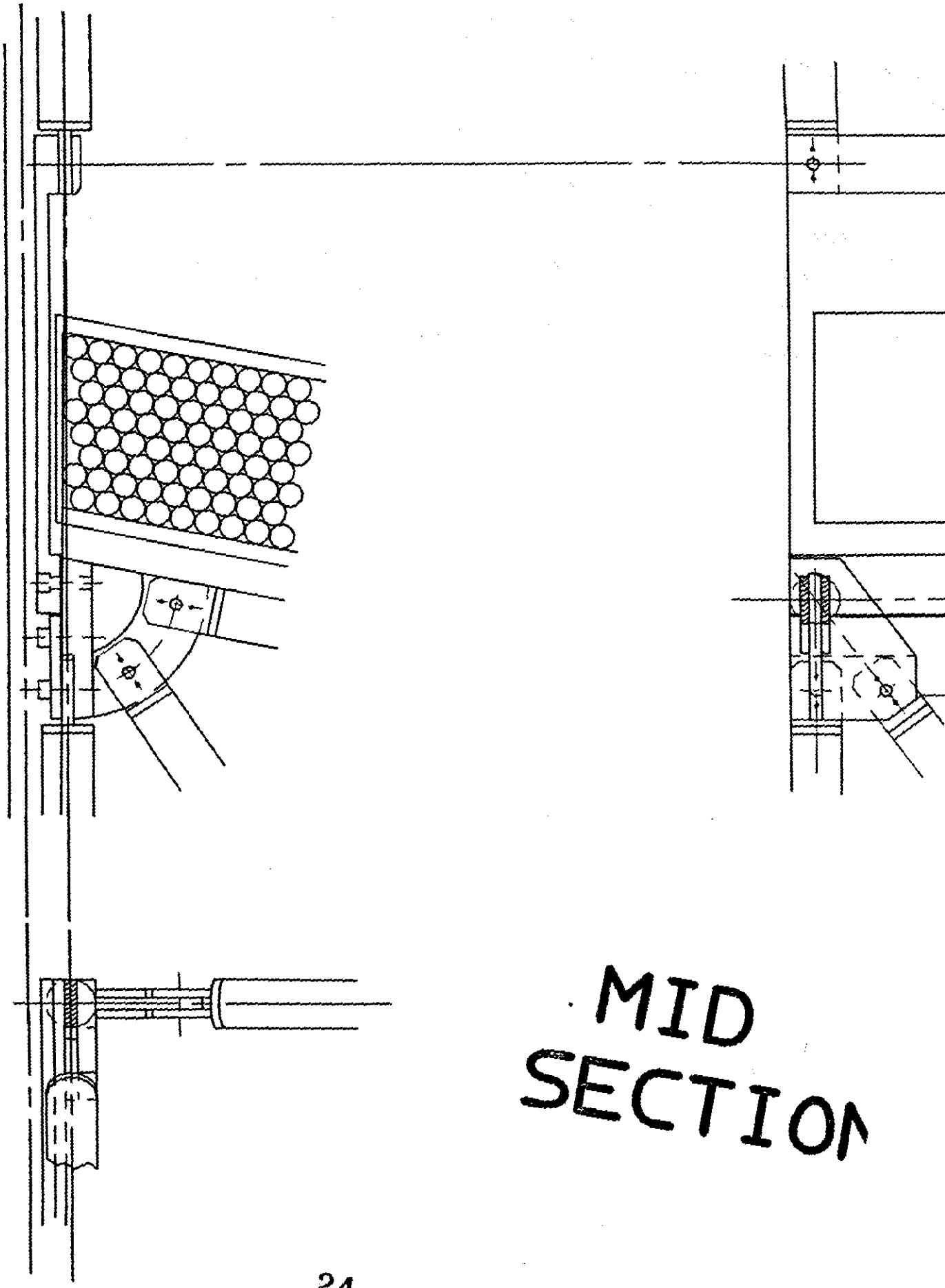
MID
SECTION

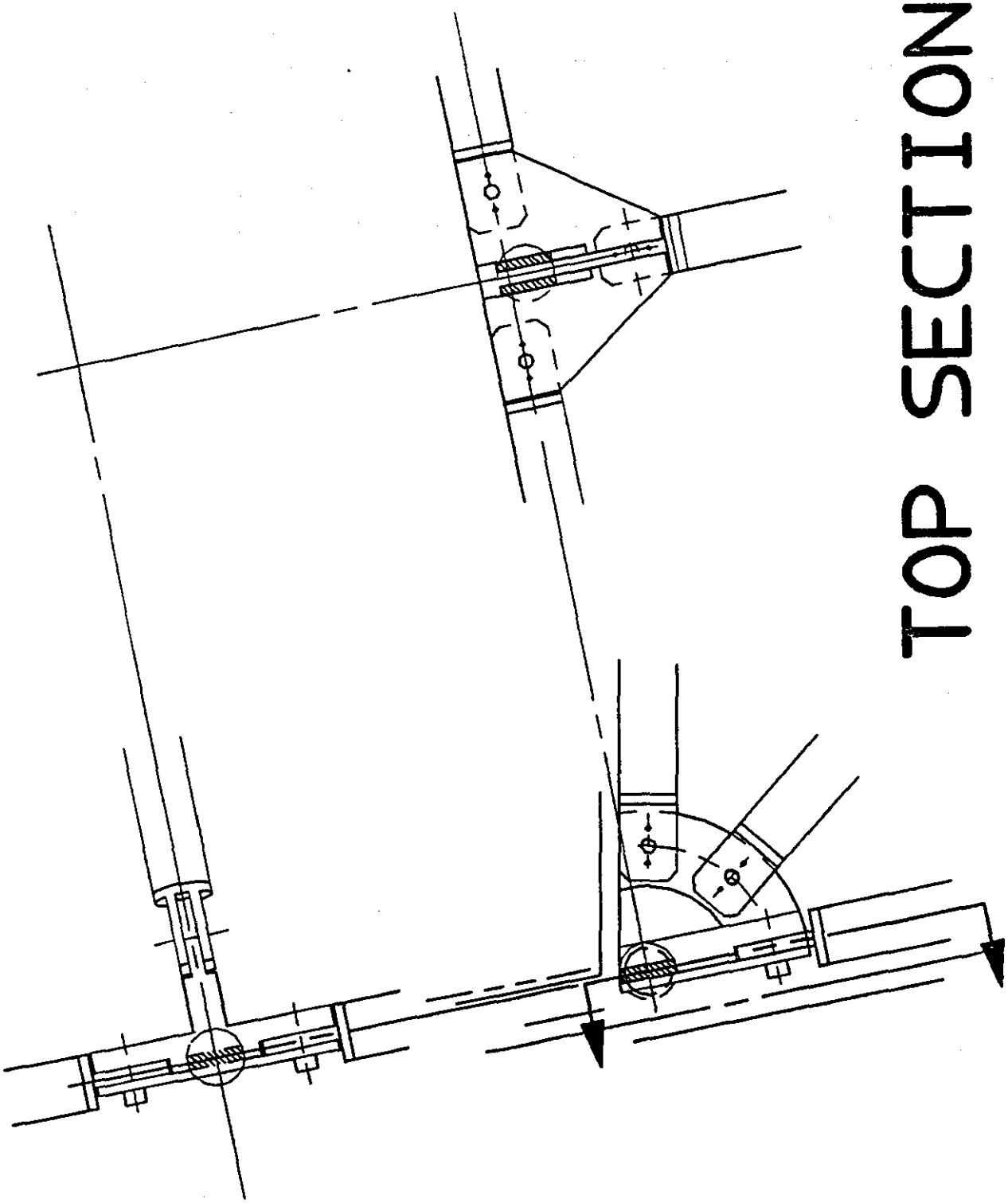

TOP SECTION

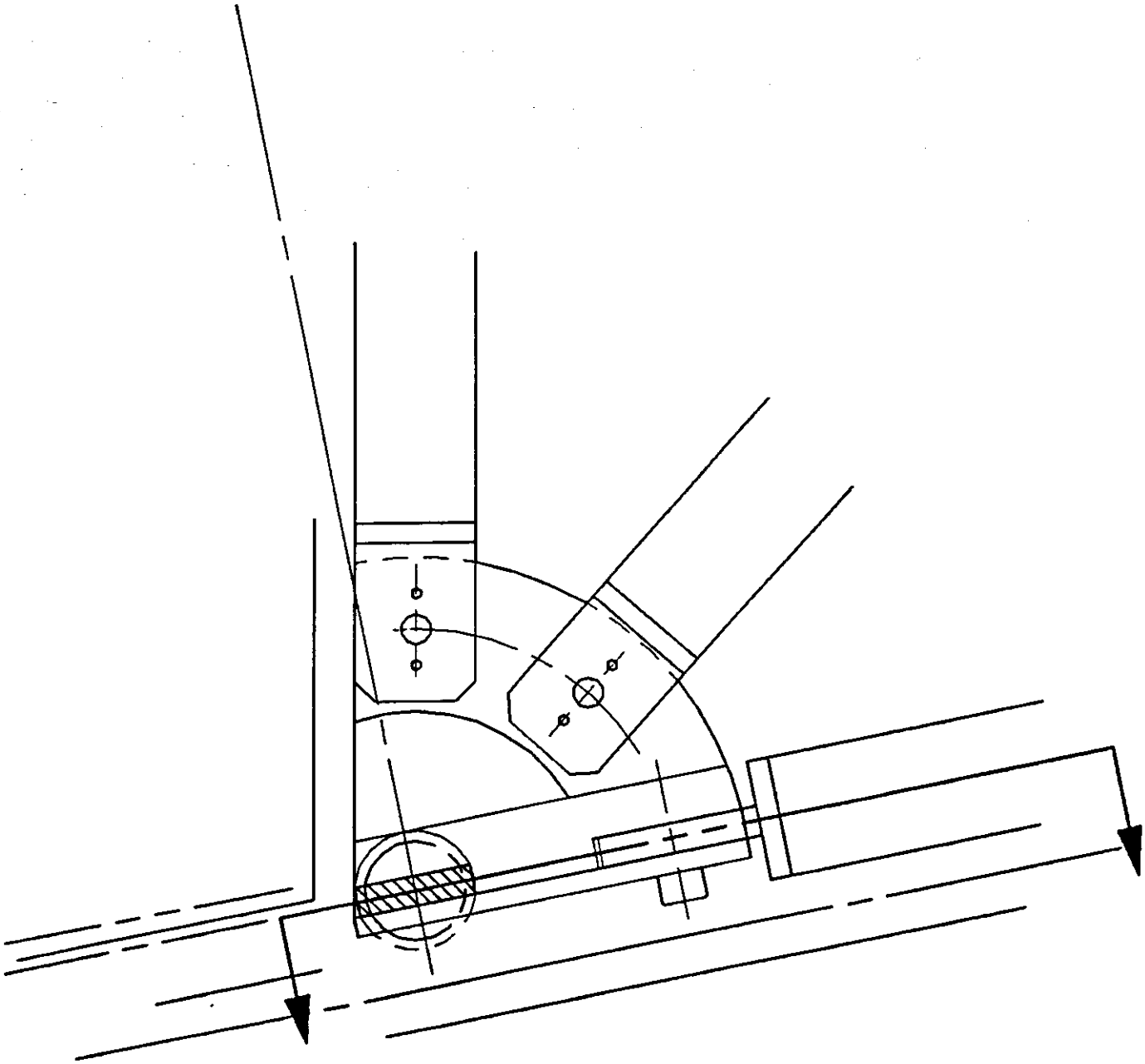

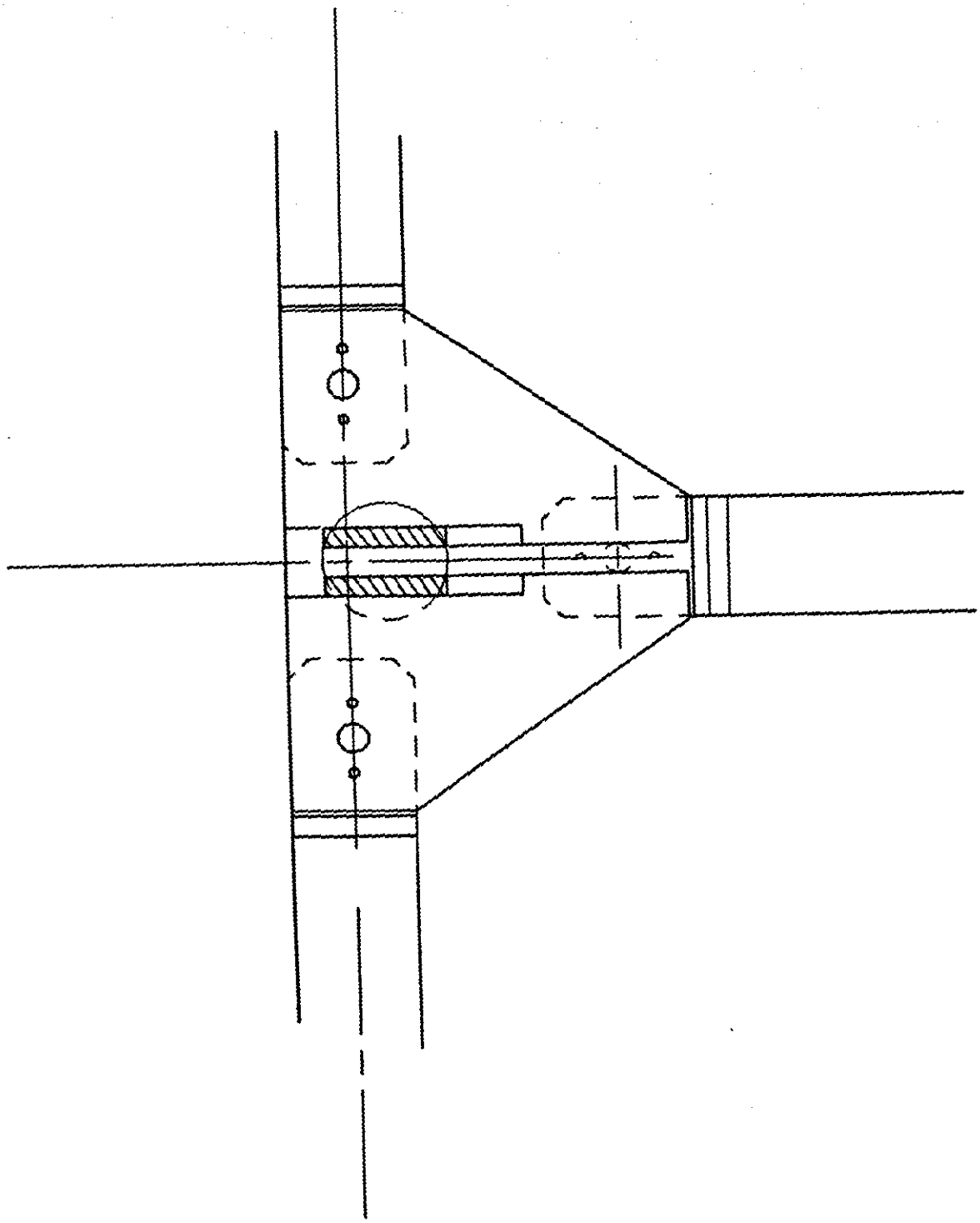

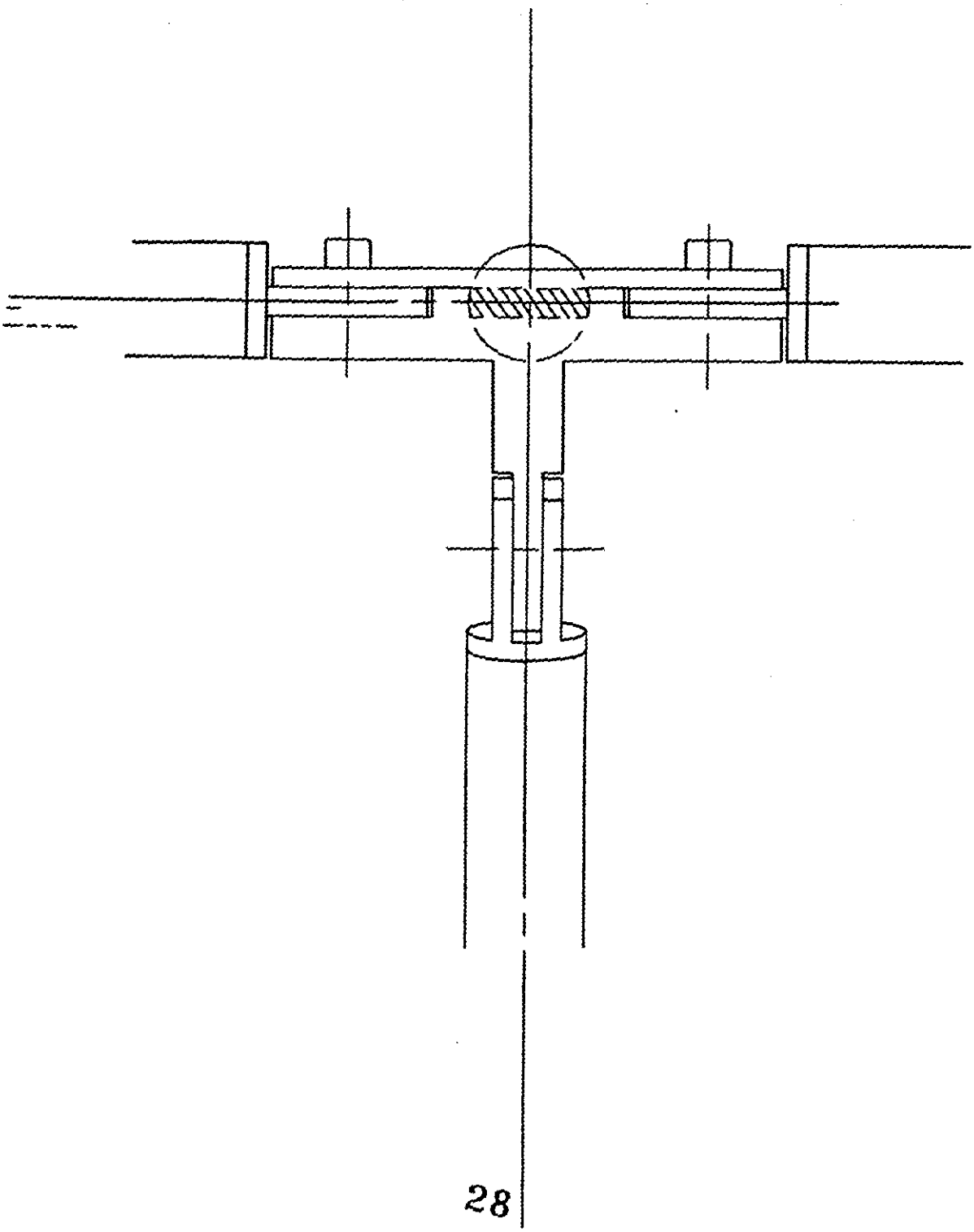

28

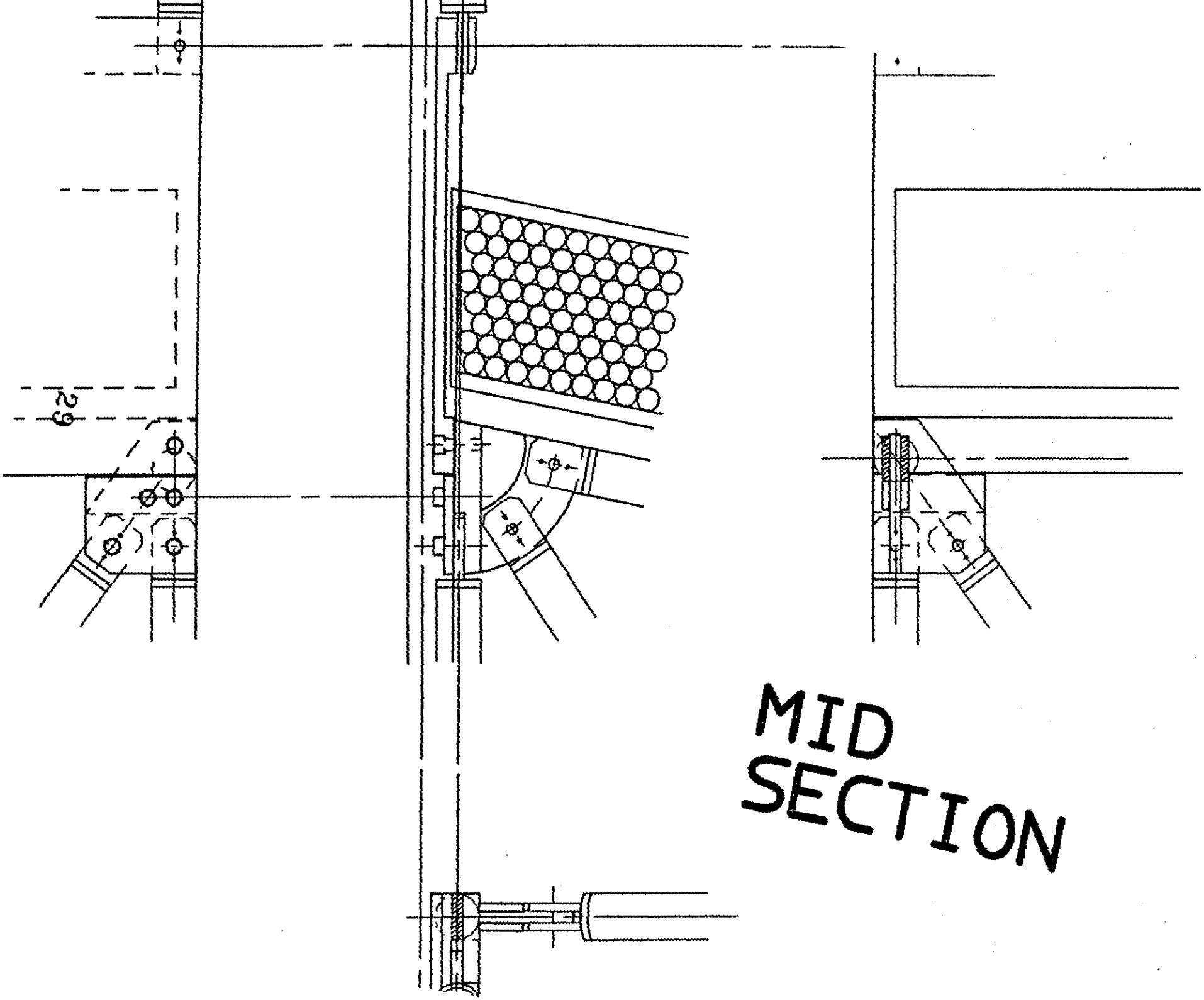
29
MID
SECTION

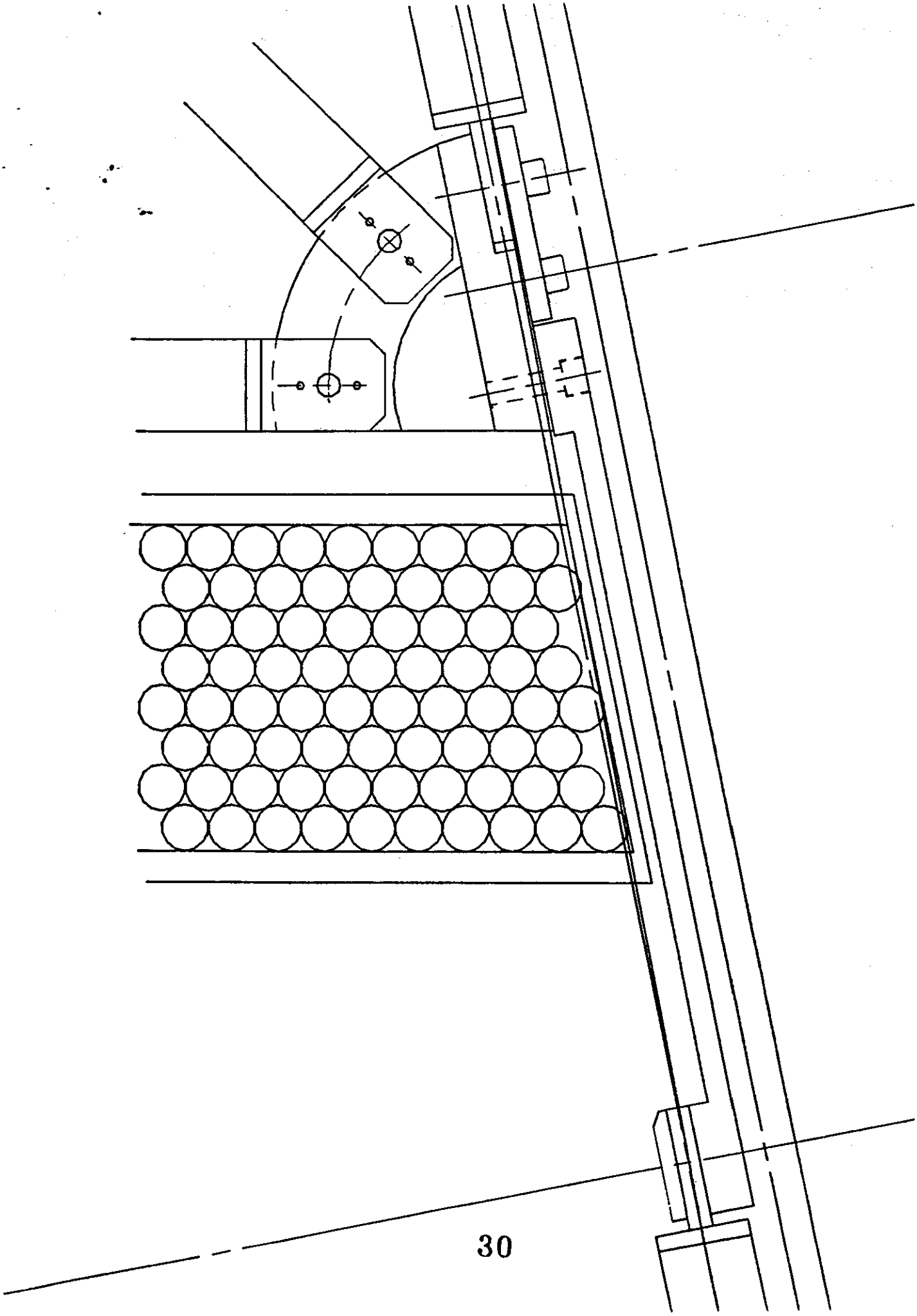

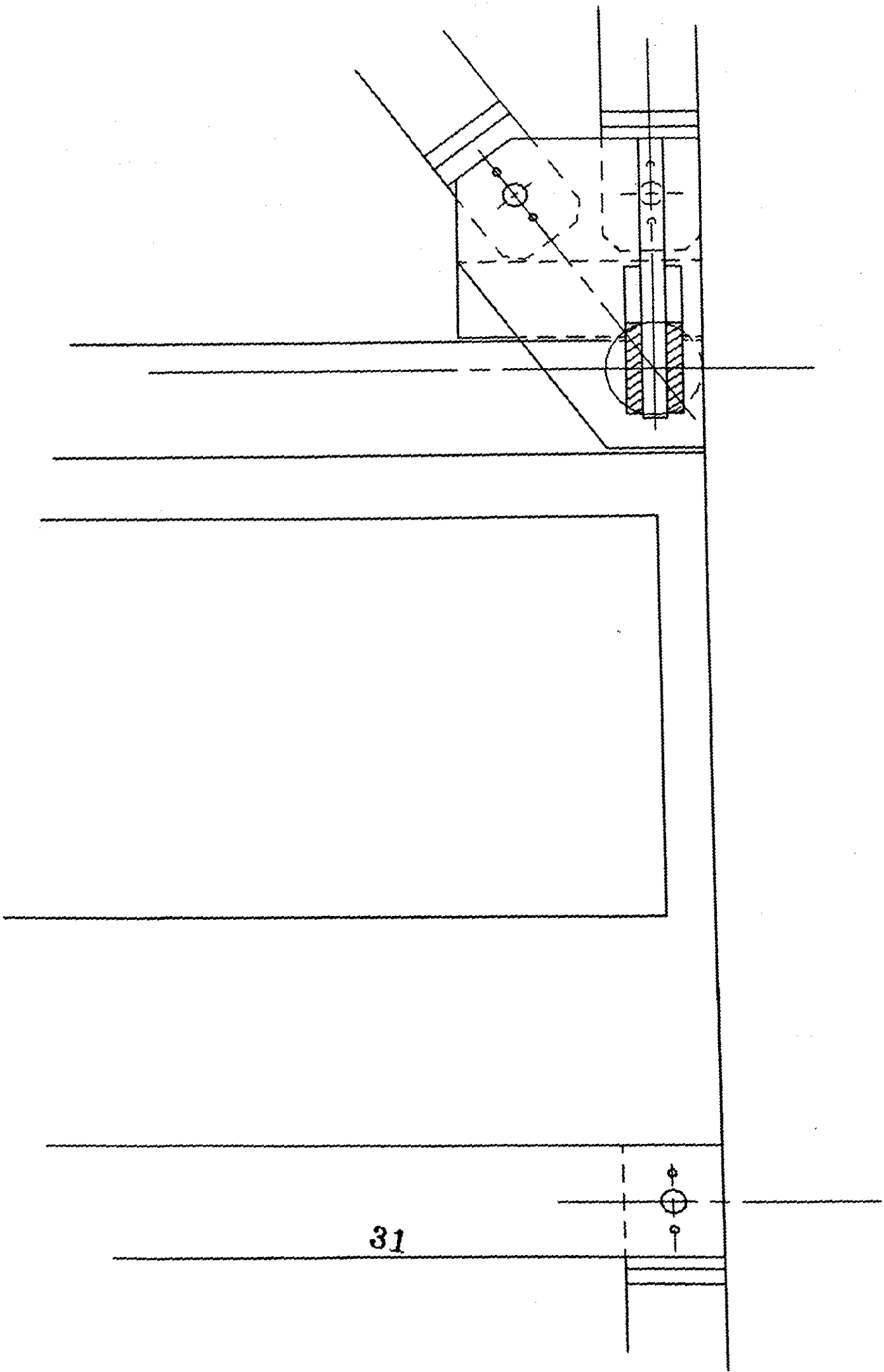
31

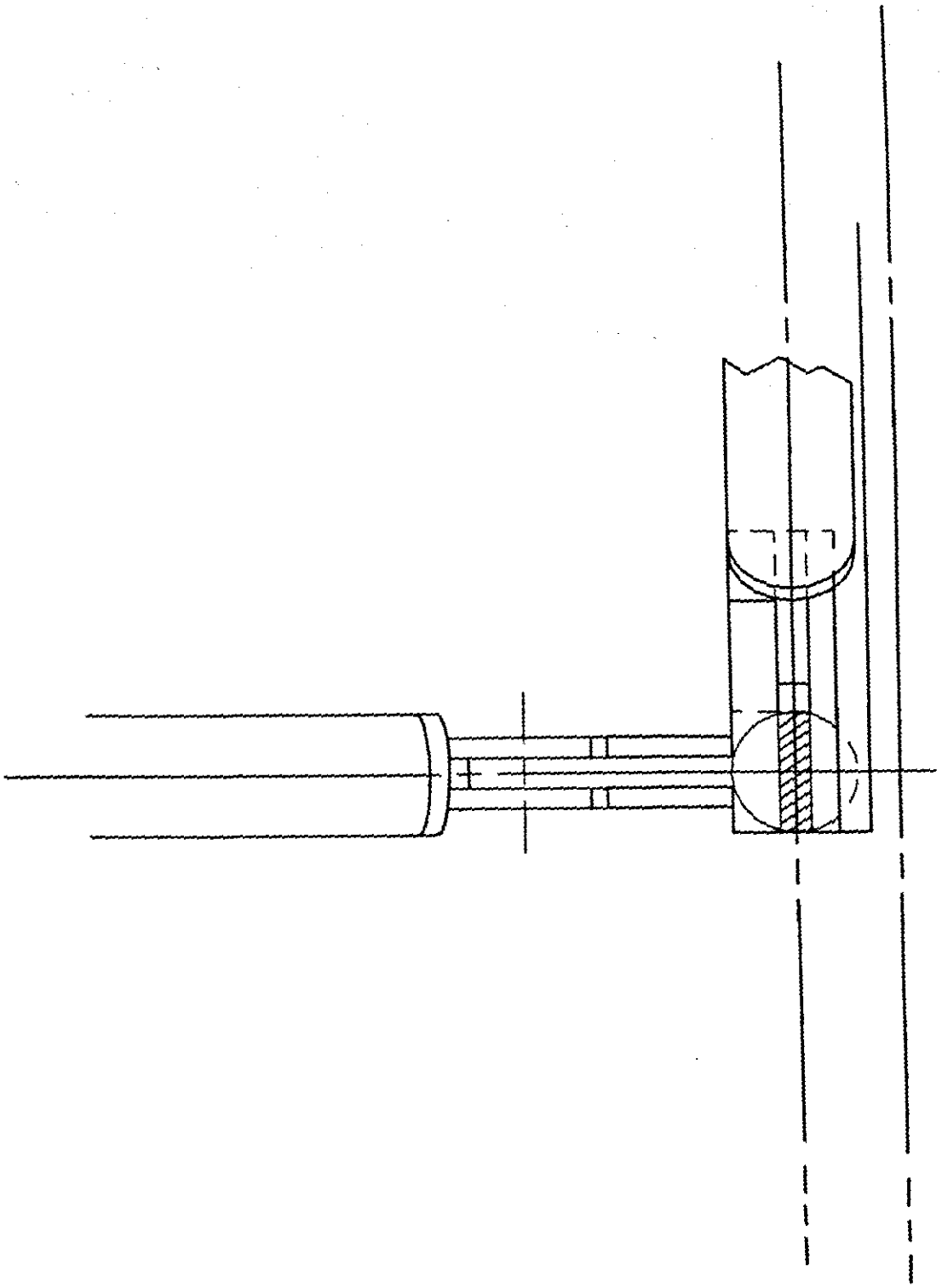

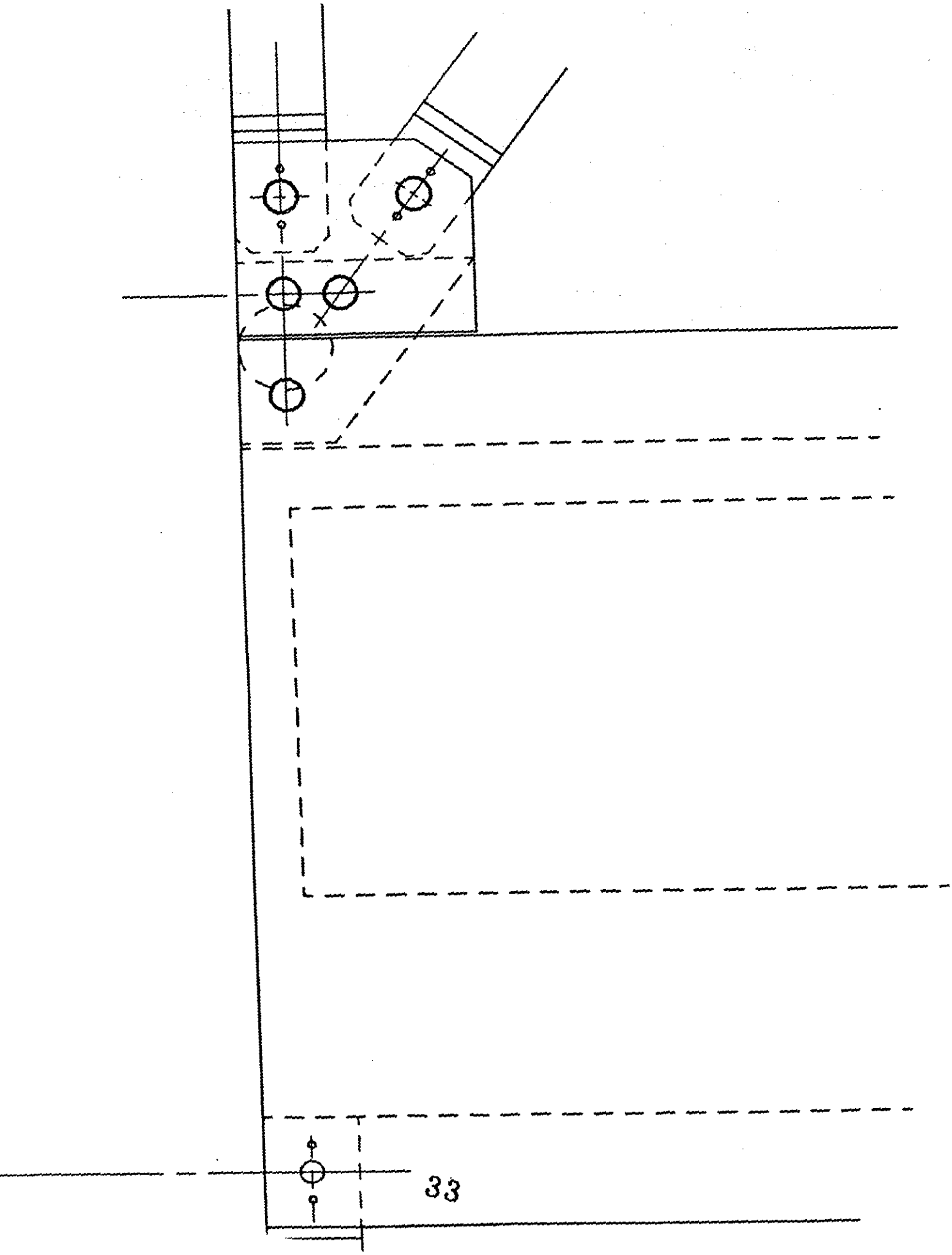
33

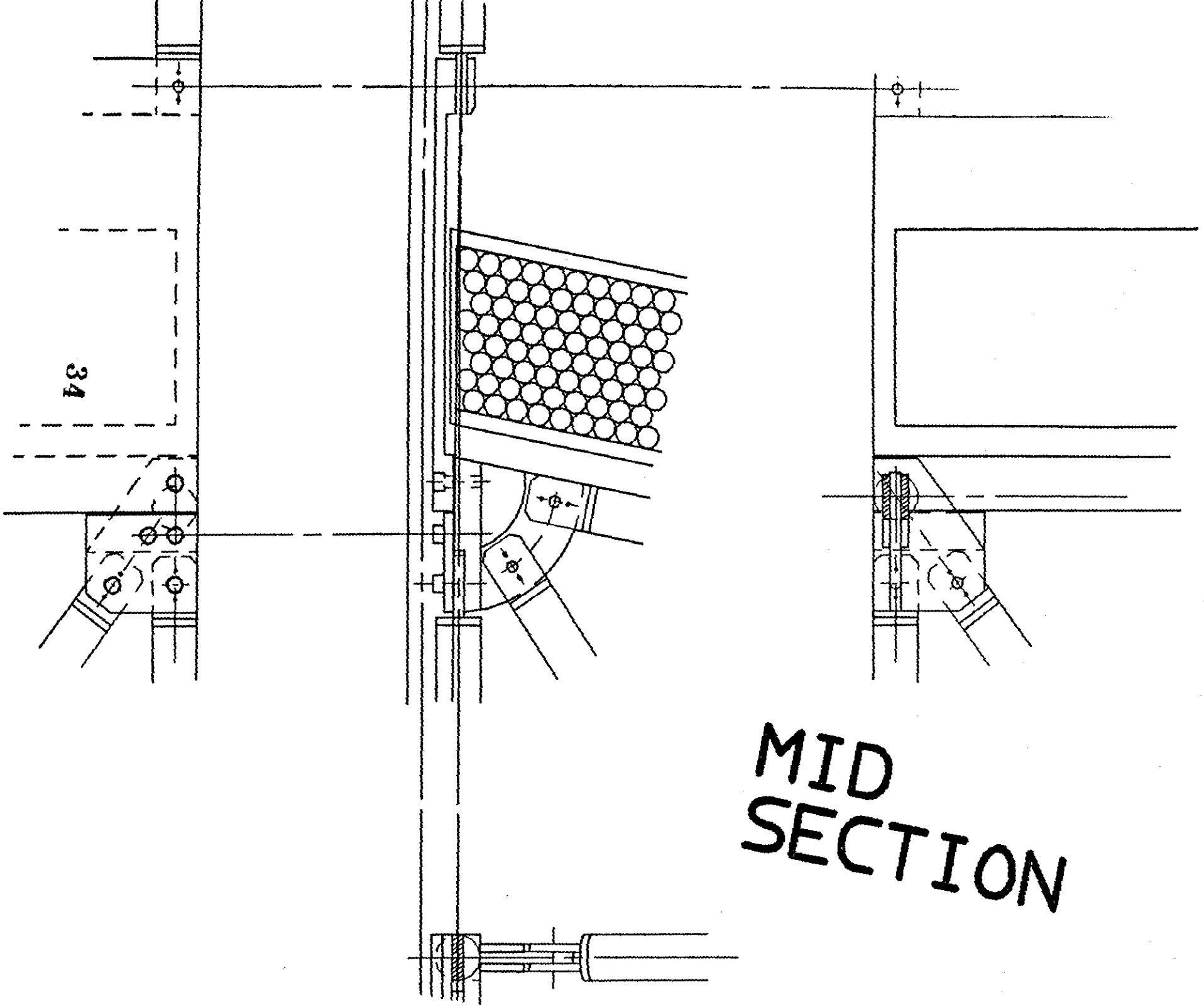
MID
SECTION

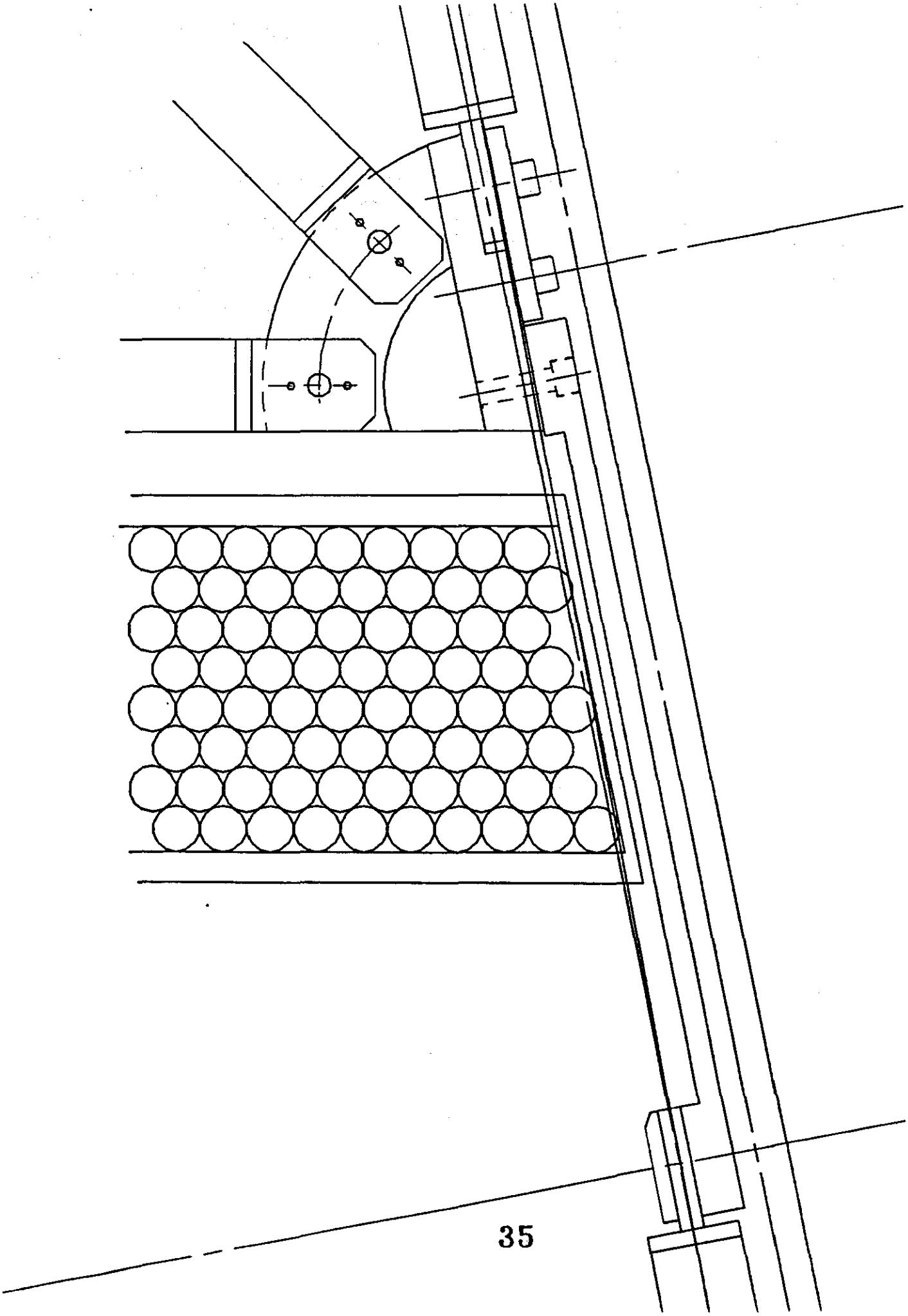

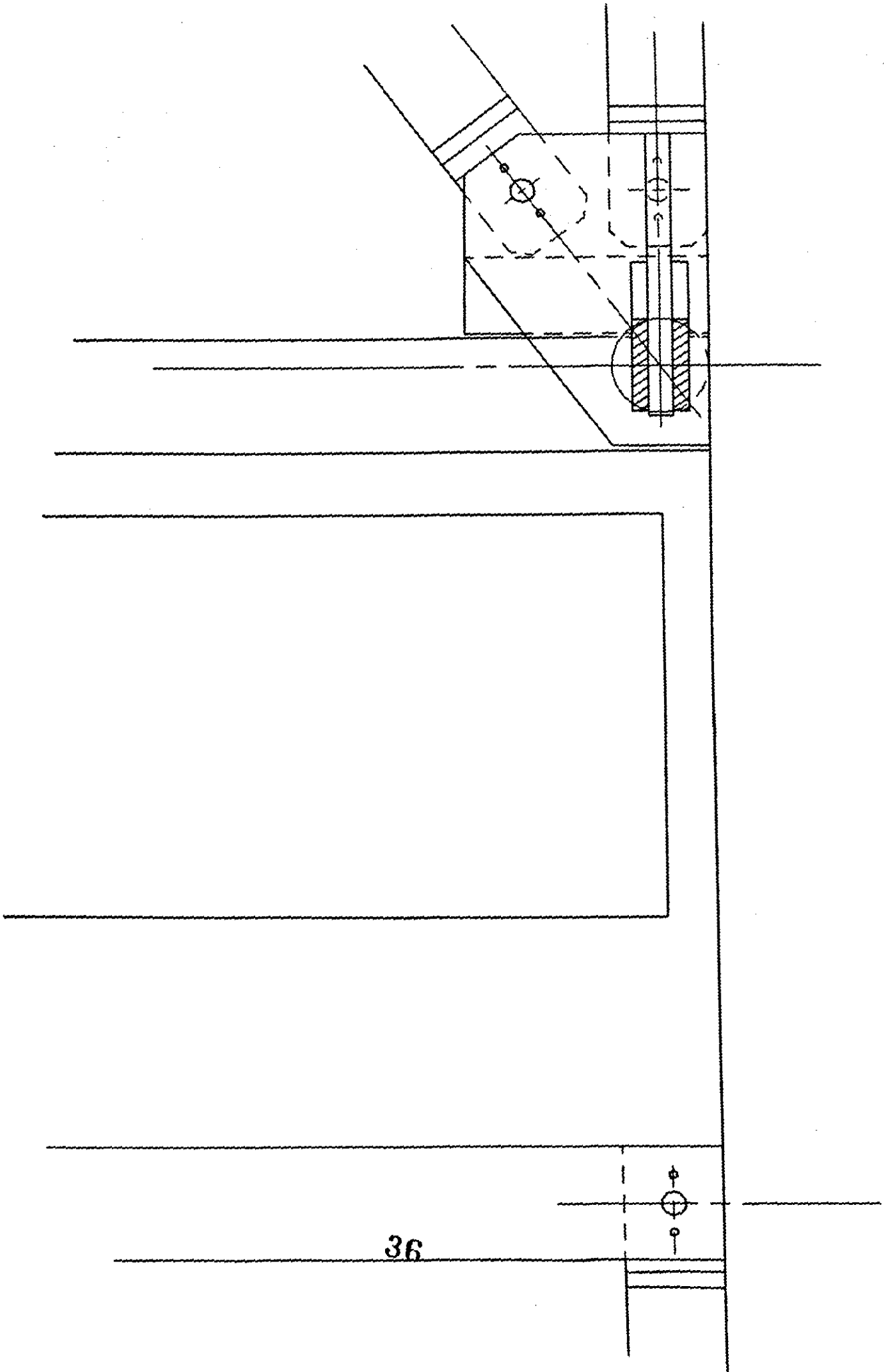

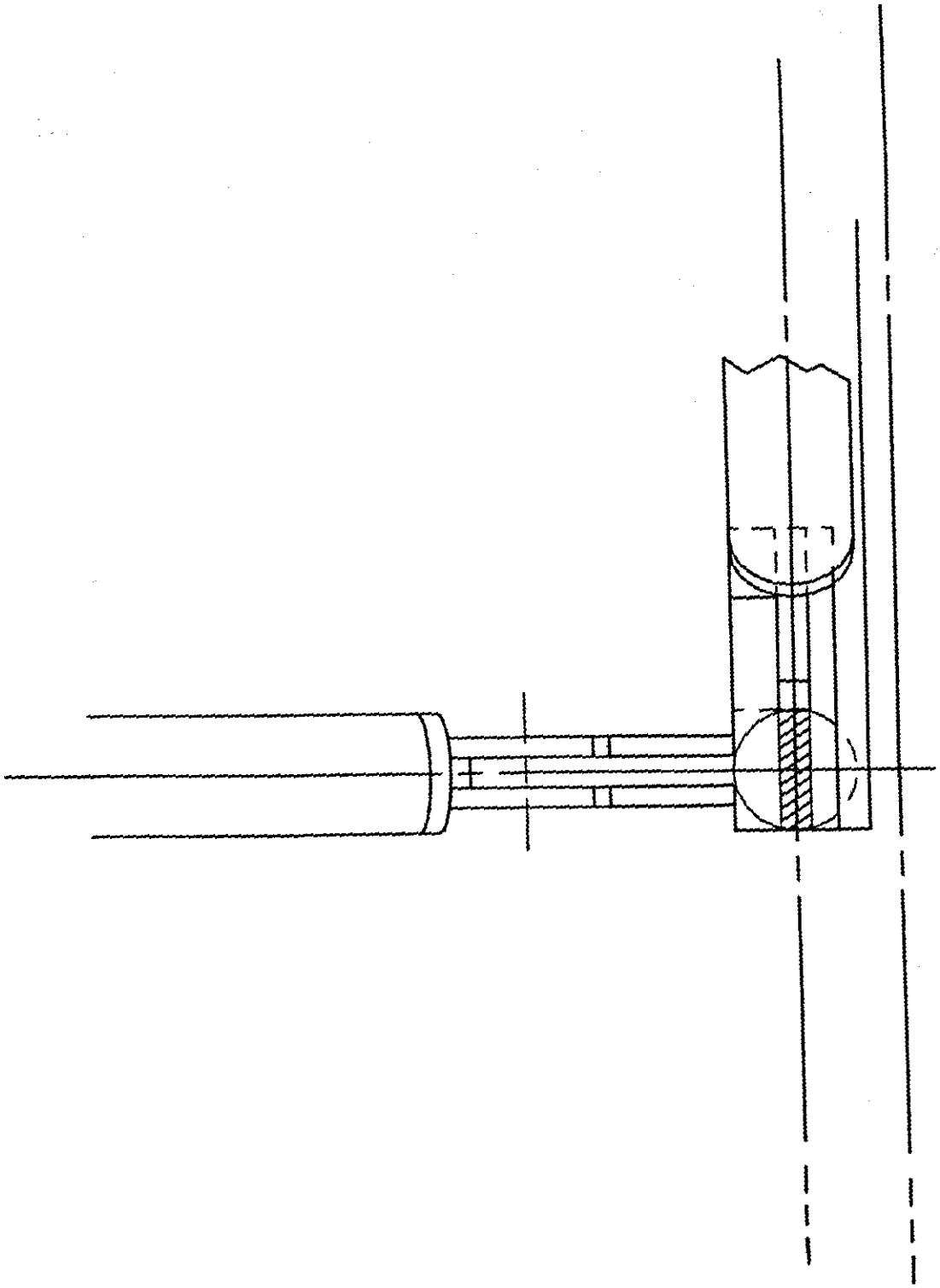

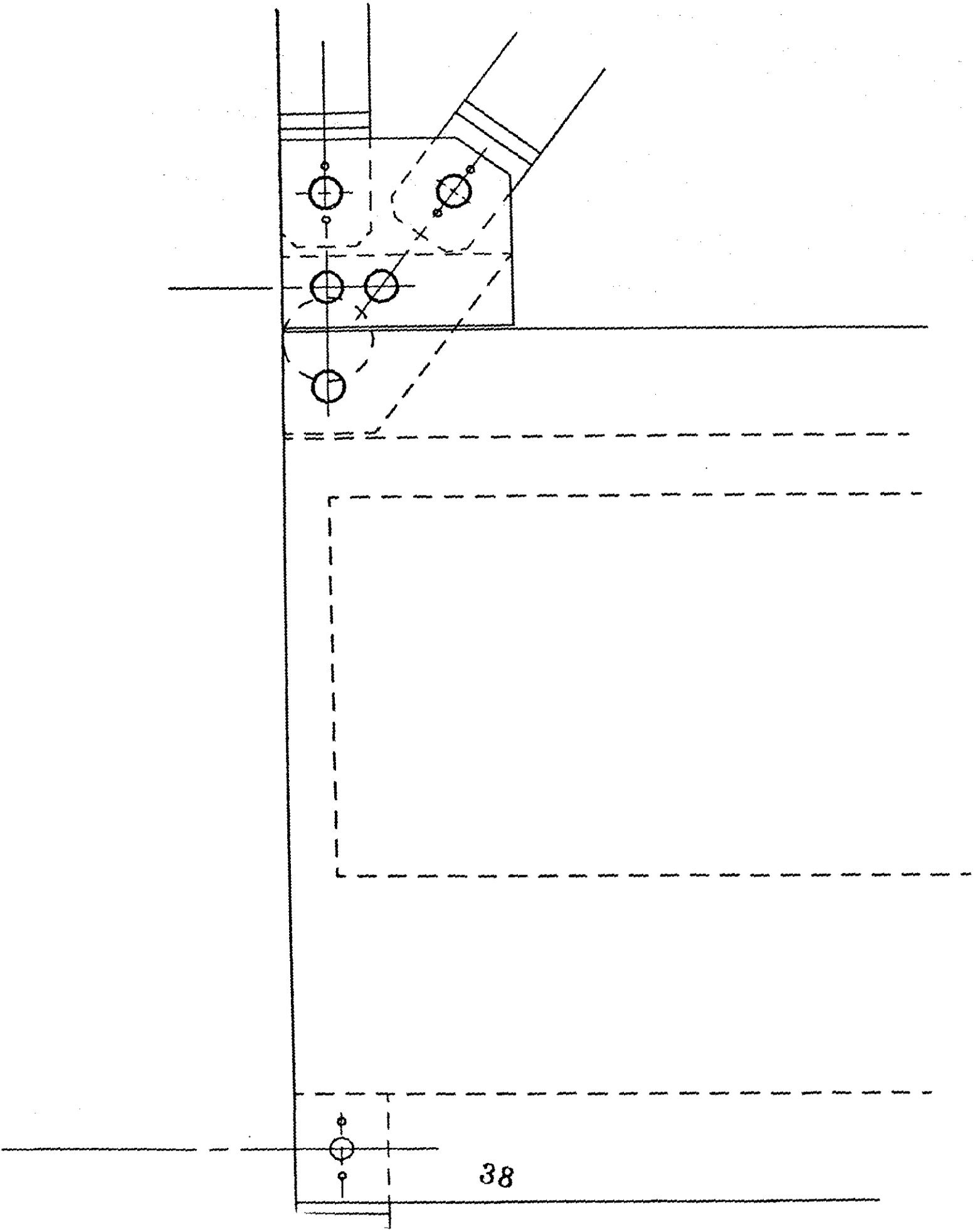
38

Mike DePiero/Draper

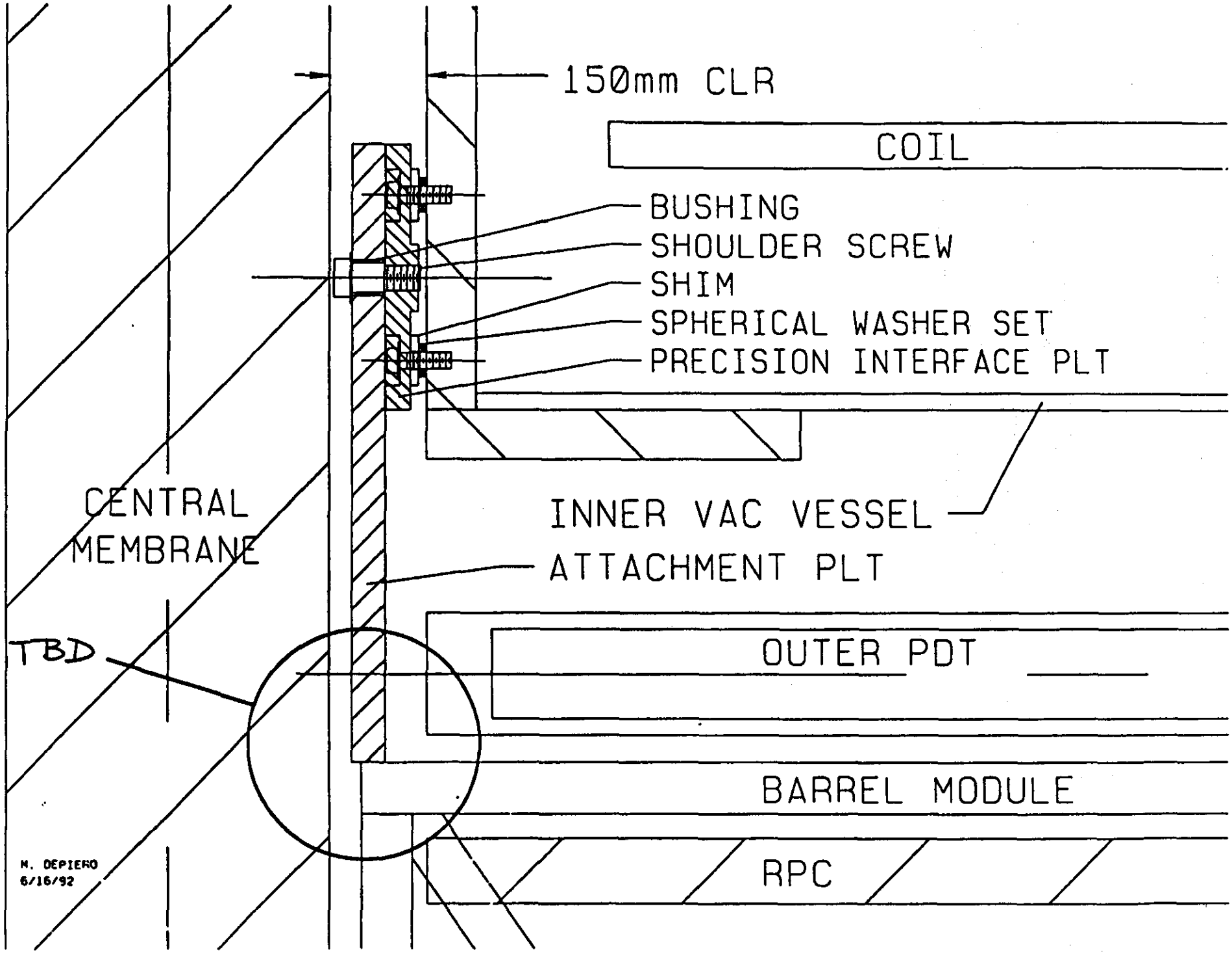
150mm CLR
COIL
BUSHING
SHOULDER SCREW
SHIM
SPHERICAL WASHER SET
PRECISION INTERFACE PLT
CENTRAL
MEMBRANE
INNER VAC VESSEL
ATTACHMENT PLT
TBD
OUTER PDT
BARREL MODULE
RPC
M. DEPIERO
6/16/92

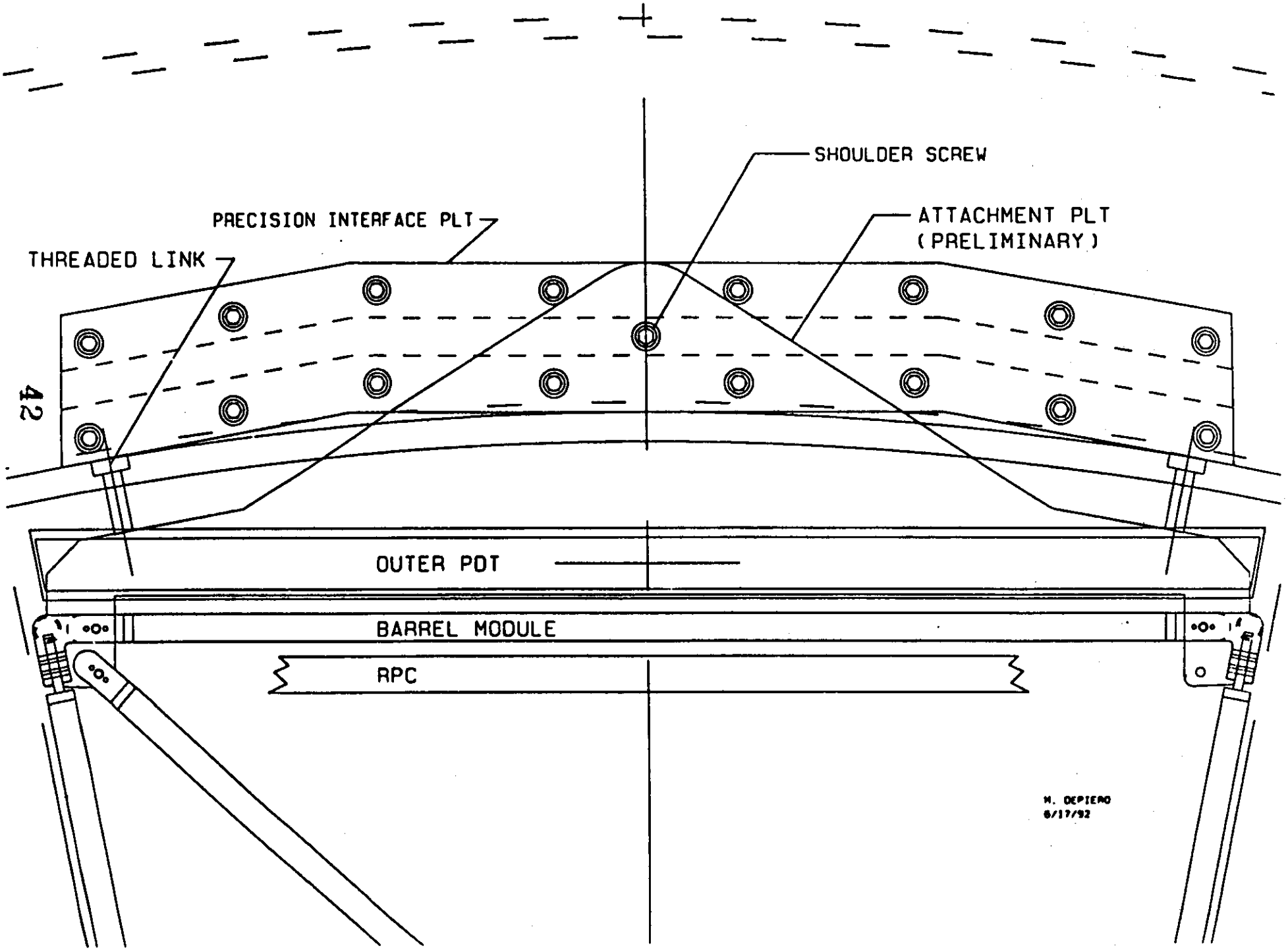
SHOULDER SCREW
PRECISION INTERFACE PLT
ATTACHMENT PLT
(PRELIMINARY)
THREADED LINK
OUTER POT
BARREL MODULE
RPC
M. DEPIERO
6/17/92

T. Kondolean/Draper

PDT & RPC CHAMBER SIZES AND VOLUMES

ITEM	DIMENSIONS
CALORIMETER OD (mm)	7200
CRYOSTAT ID (mm)	18000
INNER CLEARANCE (mm)	50.80
OUTER CLEARANCE (mm)	50.80
# OF SEGMENTS	16
ACCEPTANCE ANGLE (RAD)	0.375
ACCEPTANCE PERCENT	95.33
LEVEL TO LEVEL CENTER LINE (mm)	2,436.22

PDT CHAMBER DIM.	
LEVEL 1	
TUBES	8
TUBE DIAMETER (mm)	38.10
TUBE WALL THICKNESS (mm)	0.30
TOP COVER (mm)	25.40
BOTTOM COVER (mm)	25.40
TOTAL HEIGHT (mm)	319.84
LOWER WIDTH (mm)	1,413.09
TOP WIDTH (mm)	1,515.04
TOTAL NUMBER OF TUBES	300
TUBE LENGTH PER CHAMBER (mm)	3,000.00
TUBE VOL. PER CHAMBER (mm^3)	993910565
INSIDE N2 VOL TOTAL-PIPE (mm^3)	138552949
TOP COVER WEIGHT (gm)	11683
BOTTOM COVER WEIGHT (gm)	10897
SIDE WALL WEIGHT (2) (gm)	45477
TUBE WEIGHT (1) (gm)	301
TUBE WEIGHT TOTAL(gm)	90195
FRONT & BACK PANEL WEIGHT (gm)	263380
TOTAL CHAMBER WEIGHT (gm)	421632
LEVEL 2	
TUBES	8
TUBE DIAMETER (mm)	38.10
TUBE WALL THICKNESS (mm)	0.30
TOP COVER (mm)	25.40
BOTTOM COVER (mm)	25.40
TOTAL HEIGHT (mm)	319.84
LOWER WIDTH (mm)	2,336.29
TOP WIDTH (mm)	2,436.24
TOTAL NUMBER OF TUBES	488
TUBE LENGTH PER CHAMBER (mm)	3,600.00
TUBE VOL. PER CHAMBER (mm^3)	1940113423
INSIDE N2 VOL TOTAL-PIPE (mm^3)	289088100
TOP COVER WEIGHT (gm)	22563
BOTTOM COVER WEIGHT (gm)	21619
SIDE WALL WEIGHT (2) (gm)	54573
TUBE WEIGHT (1) (gm)	361
TUBE WEIGHT TOTAL(gm)	176061
FRONT & BACK PANEL WEIGHT (gm)	429460
TOTAL CHAMBER WEIGHT (gm)	704276

RPC ITEMS	DIMENSIONS
LEVEL 1	
WIDTH (mm)	1,515.04
LENGTH (mm)	3,000.00
GAS GAP (mm)	2
# OF GAPS	2
CHAMBER VOL (mm^3)	18180477
CHAMBER WEIGHT (gm)	41861
LEVEL 2	
WIDTH (mm)	2,436.24
LENGTH (mm)	3,600.00
GAS GAP (mm)	2
# OF GAPS	2
CHAMBER VOL (mm^3)	35110672
CHAMBER WEIGHT (gm)	80842
LEVEL 3	
WIDTH (mm)	3,336.44
LENGTH (mm)	3,600.00
GAS GAP (mm)	2
# OF GAPS	2
CHAMBER VOL (mm^3)	48044711
CHAMBER WEIGHT (gm)	110623

GAS VOLUME	METER^3
LEVEL 1 1 SEG. 2 RPCs	0.036
LEVEL 2 1 SEG. 3 RPCs	0.105
LEVEL 3 1 SEG. 4 RPCs	0.192
TOTAL PER SEG.	0.334
LEVEL 1 1 HALF	0.582
LEVEL 2 1 HALF	1.685
LEVEL 3 1 HALF	3.075
TOTAL PER HALF	5.342
LEVEL 1 TOTAL	1.164
LEVEL 2 TOTAL	3.371
LEVEL 3 TOTAL	6.150
TOTAL SYS.GAS	10.684

LEVEL 3				CHAMBER WEIGHTS	KILOS
TUBES	4			LEVEL 1 1 SEG. 2 RPCs	84
TUBE DIAMETER (mm)	38.10			LEVEL 2 1 SEG. 3 RPCs	243
TUBE WALL THICKNESS (mm)	0.30			LEVEL 3 1 SEG. 4 RPCs	442
TOP COVER (mm)	25.40			TOTAL PER SEG.	769
BOTTOM COVER (mm)	25.40			LEVEL 1 1 HALF	1340
TOTAL HEIGHT (mm)	187.87			LEVEL 2 1 HALF	3880
LOWER WIDTH (mm)	3,284.49			LEVEL 3 1 HALF	7080
TOP WIDTH (mm)	3,336.44			TOTAL PER HALF	12300
TOTAL NUMBER OF TUBES	342			LEVEL 1 TOTAL	7761
TUBE LENGTH PER CHAMBER (mm)	3,600.00			LEVEL 2 TOTAL	14160
TUBE VOL PER CHAMBER (mm^3)	1359669653			LEVEL 3 TOTAL	24600
INSIDE N2 VOL TOTAL-PIPE (mm^3)	219496269			TOTAL RPC WEIGHT	46520
TOP COVER WEIGHT (gm)	30874				
BOTTOM COVER WEIGHT (gm)	30394				
SIDE WALL WEIGHT (2) (gm)	27804				
TUBE WEIGHT (1) (gm)	361				
TUBE WEIGHT TOTAL(gm)	123387				
FRONT & BACK PANEL WEIGHT (gm)	349821				
TOTAL CHAMBER WEIGHT (gm)	562281				
PDT GAS VOLUME	METER^3				
LEVEL 1 ONE SEGMENT (2 CHAMBERS)	1.99				
LEVEL 2 ONE SEGMENT (3 CHAMBERS)	5.82				
LEVEL 3 ONE SEGMENT (4 CHAMBERS)	5.44				
TOTAL PER SEGMENT	13.25				
LEVEL 1 ONE HALF	31.81				
LEVEL 2 ONE HALF	93.13				
LEVEL 3 ONE HALF	87.02				
TOTAL PER HALF	211.95				
LEVEL 1 TOTAL	63.61				
LEVEL 2 TOTAL	186.25				
LEVEL 3 TOTAL	174.04				
TOTAL SYSTEM GAS	423.90				
PDT N2 GAS VOL.	METER^3				
LEVEL 1 ONE SEGMENT (2 CHAMBERS)	0.28				
LEVEL 2 ONE SEGMENT (3 CHAMBERS)	0.87				
LEVEL 3 ONE SEGMENT (4 CHAMBERS)	0.88				
TOTAL PER SEGMENT	2.02				
LEVEL 1 ONE HALF	4.43				
LEVEL 2 ONE HALF	13.88				
LEVEL 3 ONE HALF	14.05				
TOTAL PER HALF	32.36				
LEVEL 1 TOTAL	8.87				
LEVEL 2 TOTAL	27.75				
LEVEL 3 TOTAL	28.10				
TOTAL SYSTEM GAS	64.72				
PDT CHAMBER WEIGHTS.	KILOS				
LEVEL 1 ONE SEGMENT (2 CHAMBERS)	843				
LEVEL 2 ONE SEGMENT (3 CHAMBERS)	2113				
LEVEL 3 ONE SEGMENT (4 CHAMBERS)	2249				
TOTAL PER SEGMENT	5205				
LEVEL 1 ONE HALF	13492				
LEVEL 2 ONE HALF	33805				
LEVEL 3 ONE HALF	35986				
TOTAL PER HALF	83283				
LEVEL 1 TOTAL	26984				
LEVEL 2 TOTAL	67610				
LEVEL 3 TOTAL	71972				
TOTAL CHAMBER WEIGHTS	166567				

LSDT & RPC CHAMBER SIZES AND VOLUMES

ITEM	DIMENSIONS				
CALORIMETER OD (mm)	7200				
CRYOSTAT ID (mm)	18000				
INNER CLEARANCE (mm)	50.80				
OUTER CLEARANCE (mm)	50.80				
# OF SEGMENTS	16				
ACCEPTANCE ANGLE (RAD)	0.375				
ACCEPTANCE PERCENT	95.33				
LEVEL TO LEVEL CENTER LINE (mm)	2,406.97				
LSDT CHAMBERS				RPC ITEMS	DIMENSIONS
LEVEL 1 8 ELEMENTS					
LEVEL 1 LOWER # OF CHAMBERS	2			LEVEL 1	
# OF ELEMENTS	4			WIDTH (mm)	1,481.03
WIDTH (mm)	1,402.98			LENGTH (mm)	3,133.30
TOP COVER THICKNESS (mm)	35.00			GAS GAP (mm)	2
BOTTOM COVER THICKNESS (mm)	27.50			# OF GAPS	2
TOTAL HEIGHT (mm)	165.00			CHAMBER VOL (mm^3)	9281013
CHAMBER LENGTH (mm)	5,848.80			CHAMBER WEIGHT (gm)	42740
CHAMBER VOL. FOR LEVEL (mm^3)	692634135				
TOTAL TOP COVER WEIGHT (gm)	29065			LEVEL 2	
TOTAL BOTTOM COVER WEIGHT (gm)	22837			WIDTH (mm)	2,420.65
TOTAL END & SUPPORT WEIGHT (gm)	62503			LENGTH (mm)	3,518.33
TOTAL SIDE WALL WEIGHTS (gm)	97909			GAS GAP (mm)	2
CATHODE WEIGHTS (gm)	238961			# OF GAPS	2
TOTAL CHAMBER WEIGHTS (gm)	451274			CHAMBER VOL (mm^3)	11355546
SPACE BETWEEN LAYERS	76.20			CHAMBER WEIGHT (gm)	78440
LEVEL 1 UPPER # OF CHAMBERS	2.00			LEVEL 3	
# OF ELEMENTS	4.00			WIDTH (mm)	3,313.93
WIDTH (mm)	1,481.03			LENGTH (mm)	3,660.00
TOP COVER THICKNESS (mm)	27.50			GAS GAP (mm)	2
BOTTOM COVER THICKNESS (mm)	35.00			# OF GAPS	2
TOTAL HEIGHT (mm)	165.00			CHAMBER VOL (mm^3)	12128981
CHAMBER LENGTH (mm)	6,266.60			CHAMBER WEIGHT (gm)	111710
CHAMBER VOL. FOR LEVEL (mm^3)	786774223				
TOTAL TOP COVER WEIGHT (gm)	25829				
TOTAL BOTTOM COVER WEIGHT (gm)	32873				
TOTAL END & SUPPORT WEIGHT (gm)	65980				
TOTAL SIDE WALL WEIGHTS (gm)	104903			GAS VOLUME	METER^3
CATHODE WEIGHTS (gm)	270802			LEVEL 1 1 SEG. 2 RPCs	0.019
TOTAL CHAMBER WEIGHTS (gm)	500387			LEVEL 2 1 SEG. 3 RPCs	0.034
				LEVEL 3 1 SEG. 4 RPCs	0.049
LEVEL 2 8 ELEMENTS				TOTAL PER SEG.	0.101
LEVEL 2 LOWER # OF CHAMBERS	3			LEVEL 1 1 HALF	0.297
# OF ELEMENTS	4			LEVEL 2 1 HALF	0.545
WIDTH (mm)	2,327.96			LEVEL 3 1 HALF	0.776
TOP COVER THICKNESS (mm)	35.00			TOTAL PER HALF	1.618
BOTTOM COVER THICKNESS (mm)	27.50			LEVEL 1 TOTAL	0.594
TOTAL HEIGHT (mm)	165.00			LEVEL 2 TOTAL	1.090
CHAMBER LENGTH (mm)	10,137.00			LEVEL 3 TOTAL	1.553
CHAMBER VOL. FOR LEVEL (mm^3)	2006354669			TOTAL SYS.GAS	3.237
TOTAL TOP COVER WEIGHT (gm)	83586				

TOTAL BOTTOM COVER WEIGHT (gm)	65675			CHAMBER WEIGHTS	KILOS
TOTAL END & SUPPORT WEIGHT (gm)	103711			LEVEL 1 1 SEG. 2 RPCs	85
TOTAL SIDE WALL WEIGHTS (gm)	254540			LEVEL 2 1 SEG. 3 RPCs	235
CATHODE WEIGHTS (gm)	692924			LEVEL 3 1 SEG. 4 RPCs	447
TOTAL CHAMBER WEIGHTS (gm)	1200435			TOTAL PER SEG.	768
SPACE BETWEEN LAYERS	76.20			LEVEL 1 1 HALF	1368
				LEVEL 2 1 HALF	3765
LEVEL 2 UPPER # OF CHAMBERS	3.00			LEVEL 3 1 HALF	7149
# OF ELEMENTS	4.00			TOTAL PER HALF	12282
WIDTH (mm)	2,420.65			LEVEL 1 TOTAL	7530
TOP COVER THICKNESS (mm)	27.50			LEVEL 2 TOTAL	14299
BOTTOM COVER THICKNESS (mm)	35.00			LEVEL 3 TOTAL	24565
TOTAL HEIGHT (mm)	165.00			**TOTAL RPC WEIGHT**	46394
CHAMBER LENGTH (mm)	10,555.00				
CHAMBER VOL. FOR LEVEL (mm^3)	2180154203				
TOTAL TOP COVER WEIGHT (gm)	71106				
TOTAL BOTTOM COVER WEIGHT (gm)	90498				
TOTAL END & SUPPORT WEIGHT (gm)	107840				
TOTAL SIDE WALL WEIGHTS (gm)	265036				
CATHODE WEIGHTS (gm)	746376				
TOTAL CHAMBER WEIGHTS (gm)	1280855				
LEVEL 3 4 ELEMENTS					
# OF CHAMBERS	4				
# OF ELEMENTS	4				
WIDTH (mm)	3,313.93				
TOP COVER THICKNESS (mm)	27.50				
BOTTOM COVER THICKNESS (mm)	35.00				
TOTAL HEIGHT (mm)	165.00				
CHAMBER LENGTH (mm)	14,640.00				
CHAMBER VOL. FOR LEVEL (mm^3)	4144492271				
TOTAL TOP COVER WEIGHT (gm)	135020				
TOTAL BOTTOM COVER WEIGHT (gm)	171843				
TOTAL END & SUPPORT WEIGHT (gm)	147636				
TOTAL SIDE WALL WEIGHTS (gm)	490147				
CATHODE WEIGHTS (gm)	1426328				
TOTAL CHAMBER WEIGHTS (gm)	2370974				
LSDT GAS VOLUME	**METER^3**				
LEVEL 1 ONE SEGMENT (4 CHAMBERS)	1.48				
LEVEL 2 ONE SEGMENT (6 CHAMBERS)	4.19				
LEVEL 3 ONE SEGMENT (4 CHAMBERS)	4.14				
TOTAL PER SEGMENT	9.81				
LEVEL 1 ONE HALF	23.67				
LEVEL 2 ONE HALF	66.98				
LEVEL 3 ONE HALF	66.31				
TOTAL PER HALF	156.97				
LEVEL 1 TOTAL	47.34				
LEVEL 2 TOTAL	133.97				
LEVEL 3 TOTAL	132.62				
TOTAL SYSTEM GAS	313.93				
LSDT CHAMBER WEIGHTS.	**KILOS**				
LEVEL 1 ONE SEGMENT (4 CHAMBERS)	952				
LEVEL 2 ONE SEGMENT (6 CHAMBERS)	2481				
LEVEL 3 ONE SEGMENT (4 CHAMBERS)	2371				
TOTAL PER SEGMENT	5804				
LEVEL 1 ONE HALF	15227				
LEVEL 2 ONE HALF	39701				
LEVEL 3 ONE HALF	37936				
TOTAL PER HALF	92863				
LEVEL 1 TOTAL	30453				
LEVEL 2 TOTAL	79401				
LEVEL 3 TOTAL	75871				
TOTAL CHAMBER WEIGHTS	185726				

Marty Furey/Draper

CONDITION #1

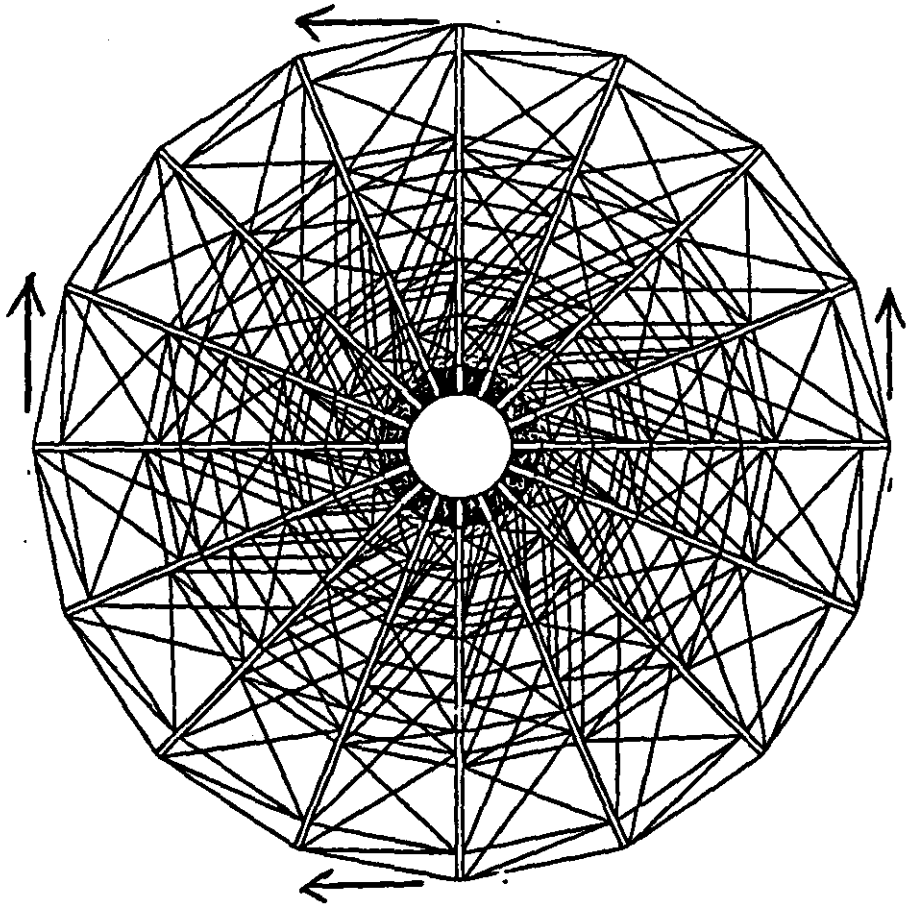

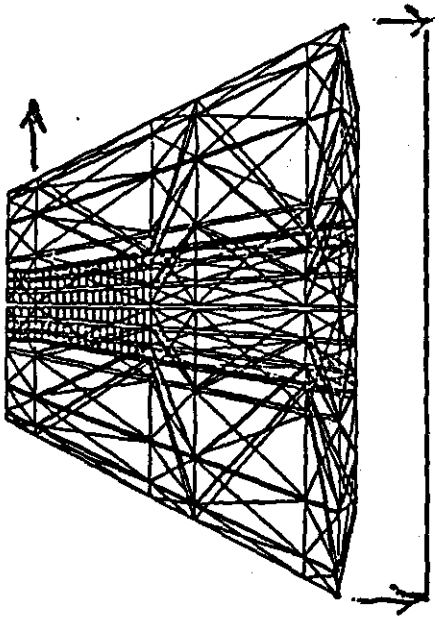

Condition #2

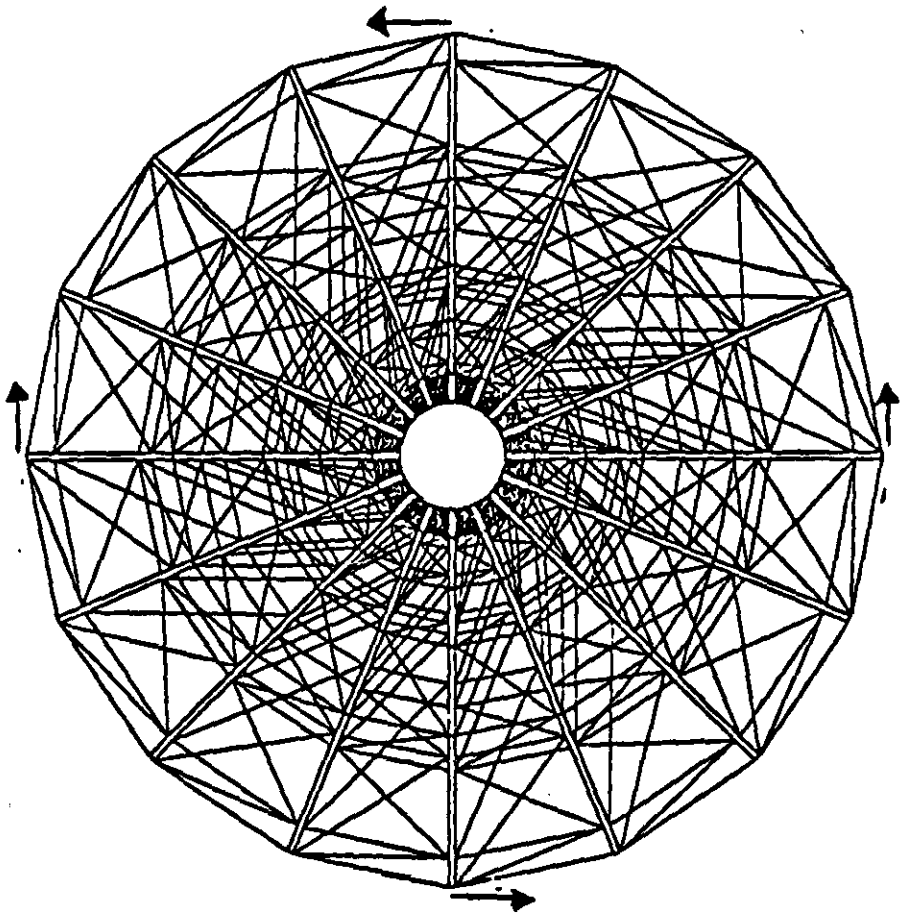

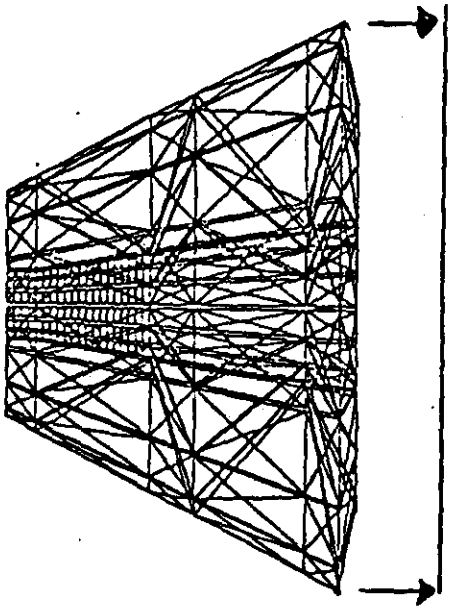

Condition #3

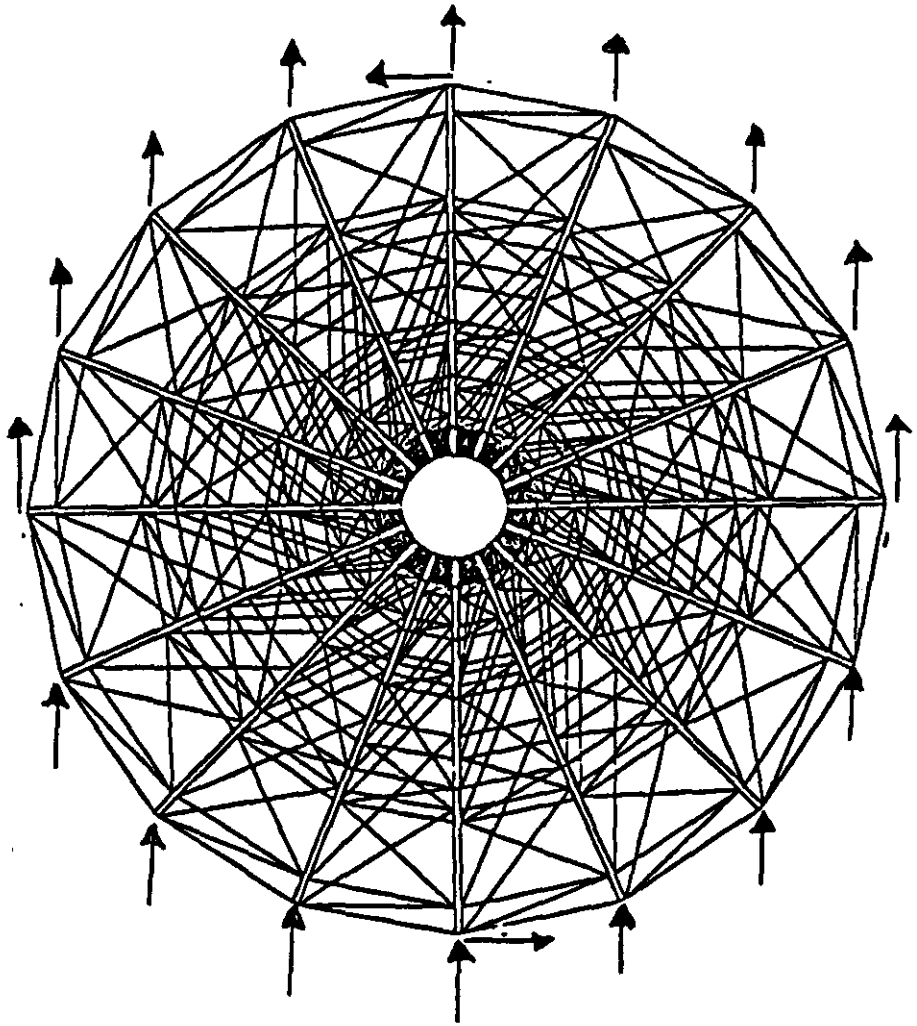

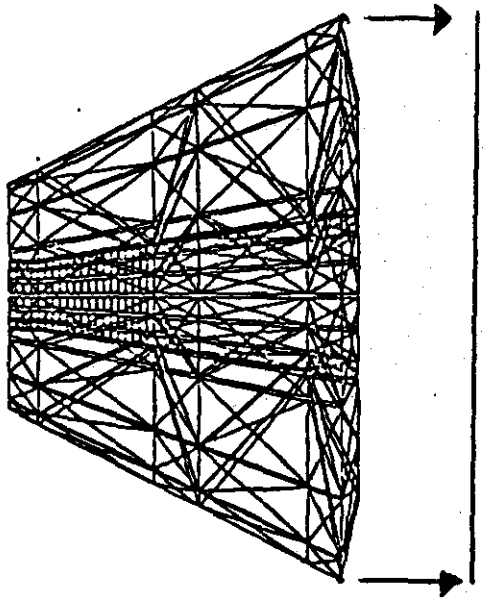

Condition #4

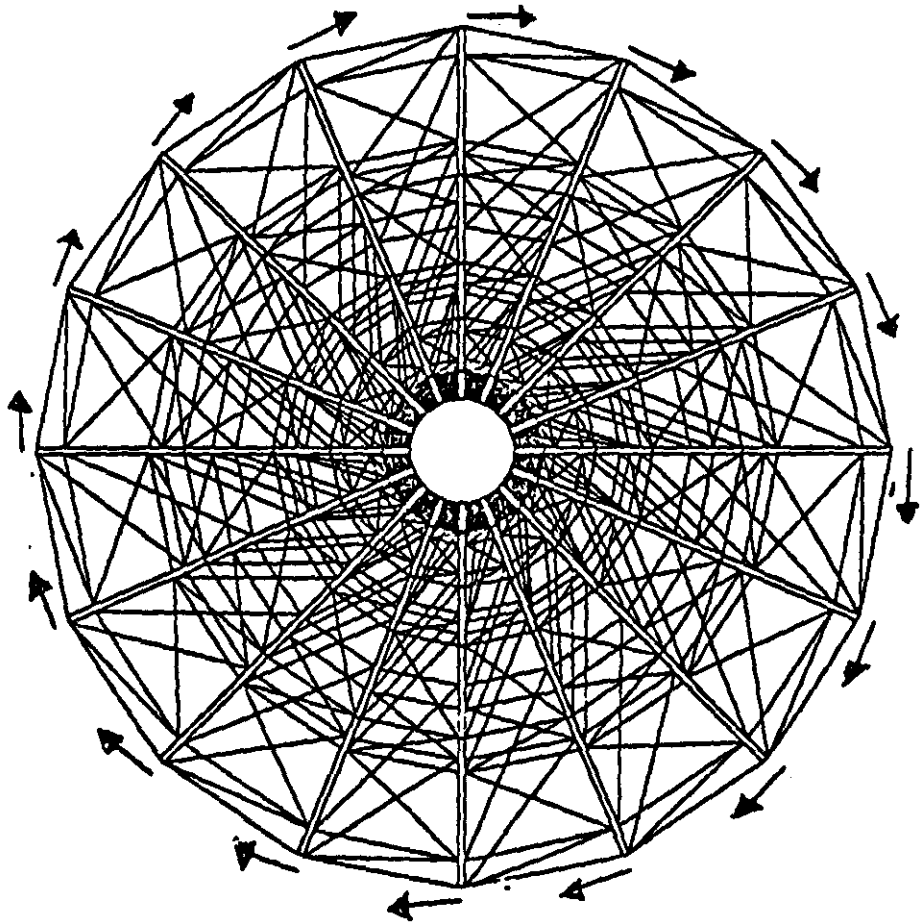

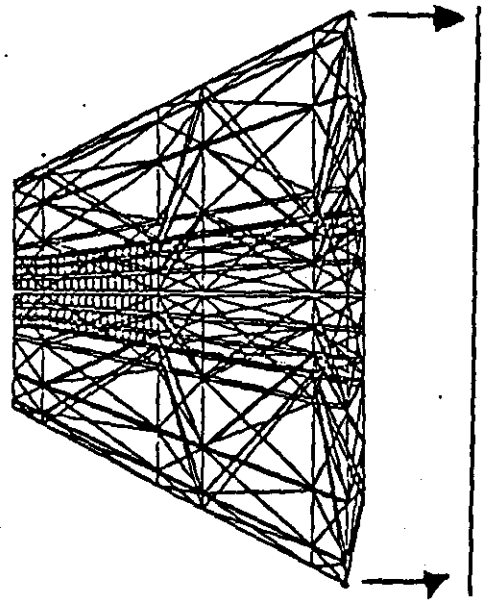

PRELIMINARY RESULTS
GEM END CAP ASSEMBLY

SUPPORT CONDITION	MAX DISPL. (mm)
COND. #1 (prev. analy'd)	5.0
COND. #2	10.0 (nodes 523 & 1099)
COND. #3	2.5 (nodes 523 & 1099)
COND. #4	T.B.D.

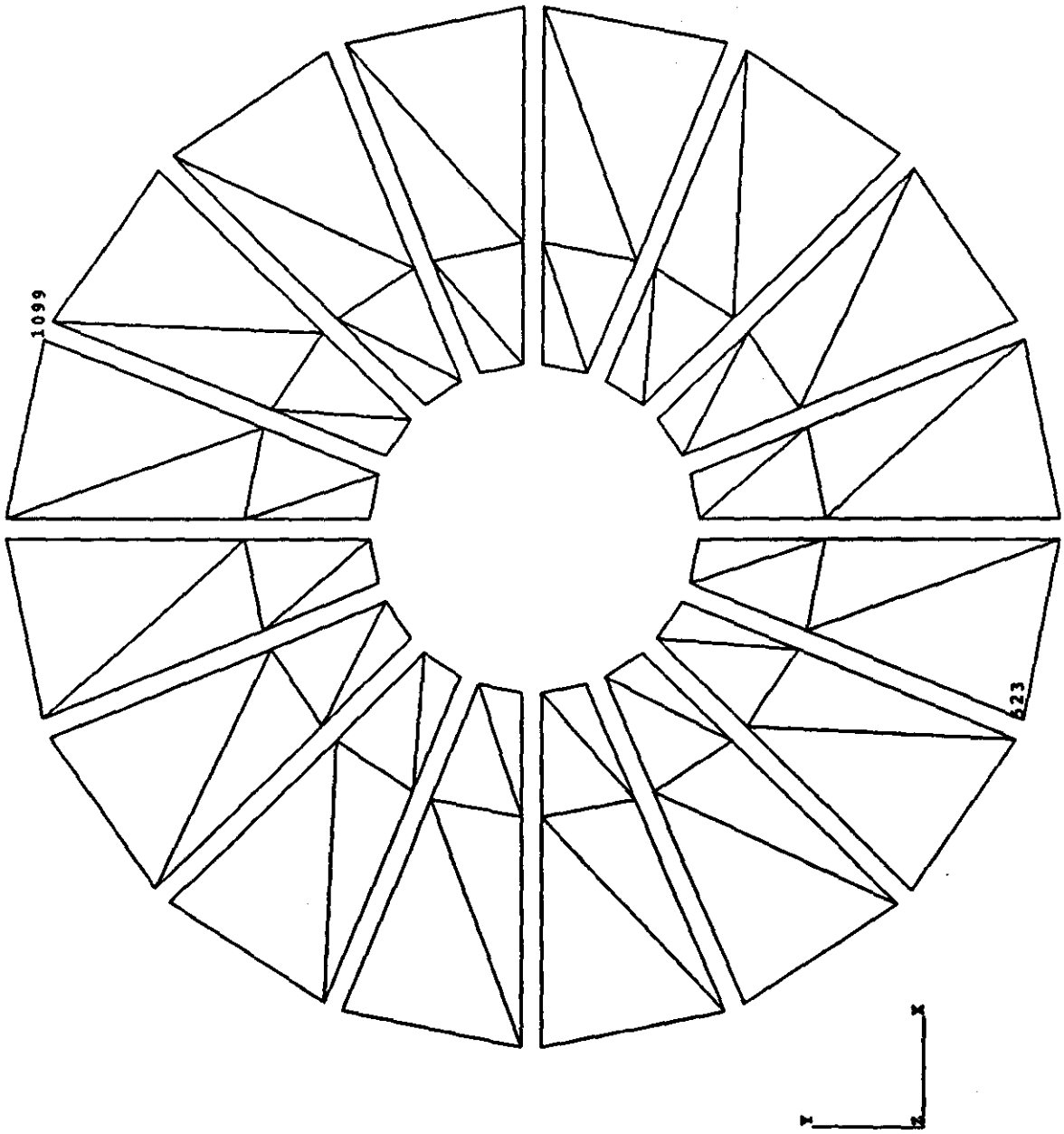
1099
623

Dick Gustavson/Draper

Design of

Cost-Effective

Manufacturing Systems

DRAPER LABORATORY

Design of Cost-Effective Manufacturing Systems

CSDL has over 12 years experience establishing assembly systems.

"Products" include commercial / industrial / military.

Methods initially intended for Manufacturing Engineers.

Some aspects revised to assist in concurrent engineering.

Primarily aimed at assembly systems, most of the fundamental ideas also apply to component fabrication systems.

A unique combination of technology and economics.

DRAPER LABORATORY

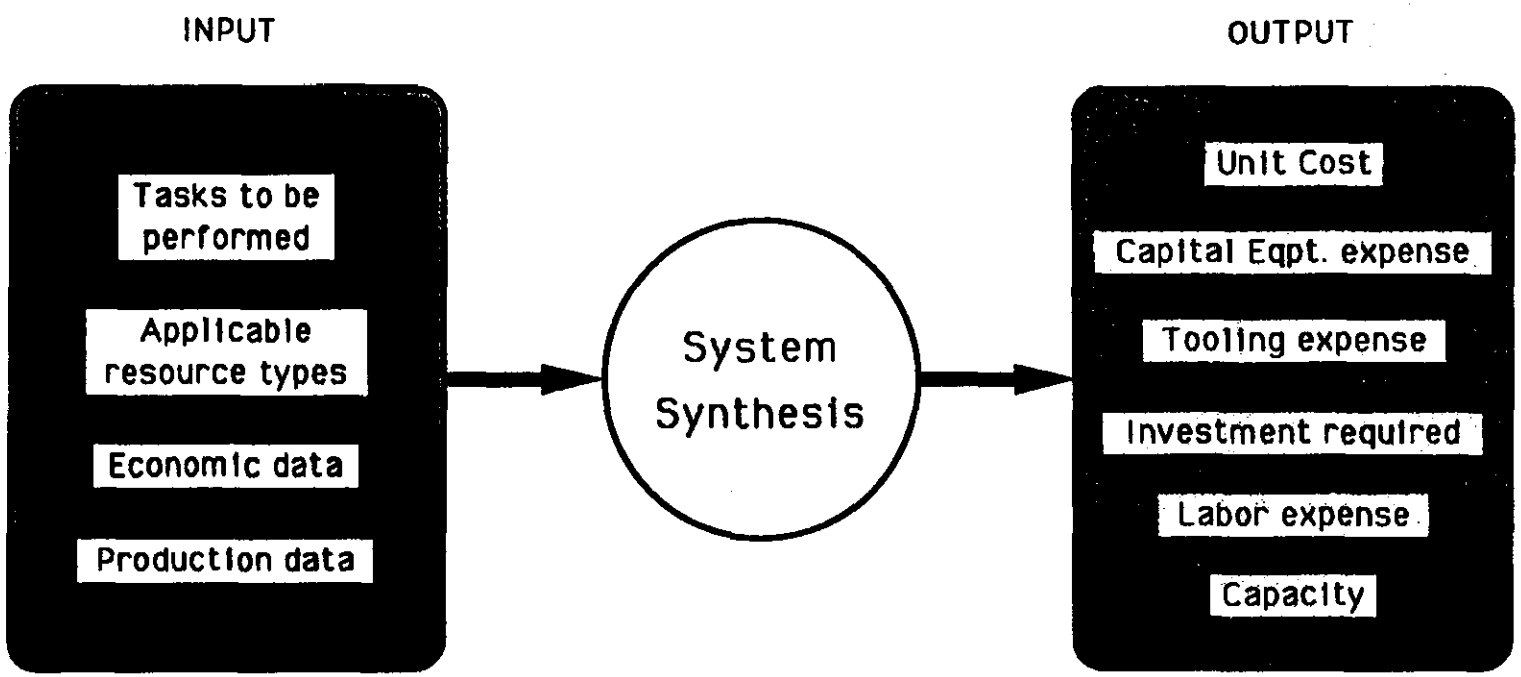

DRAPER LABORATORY

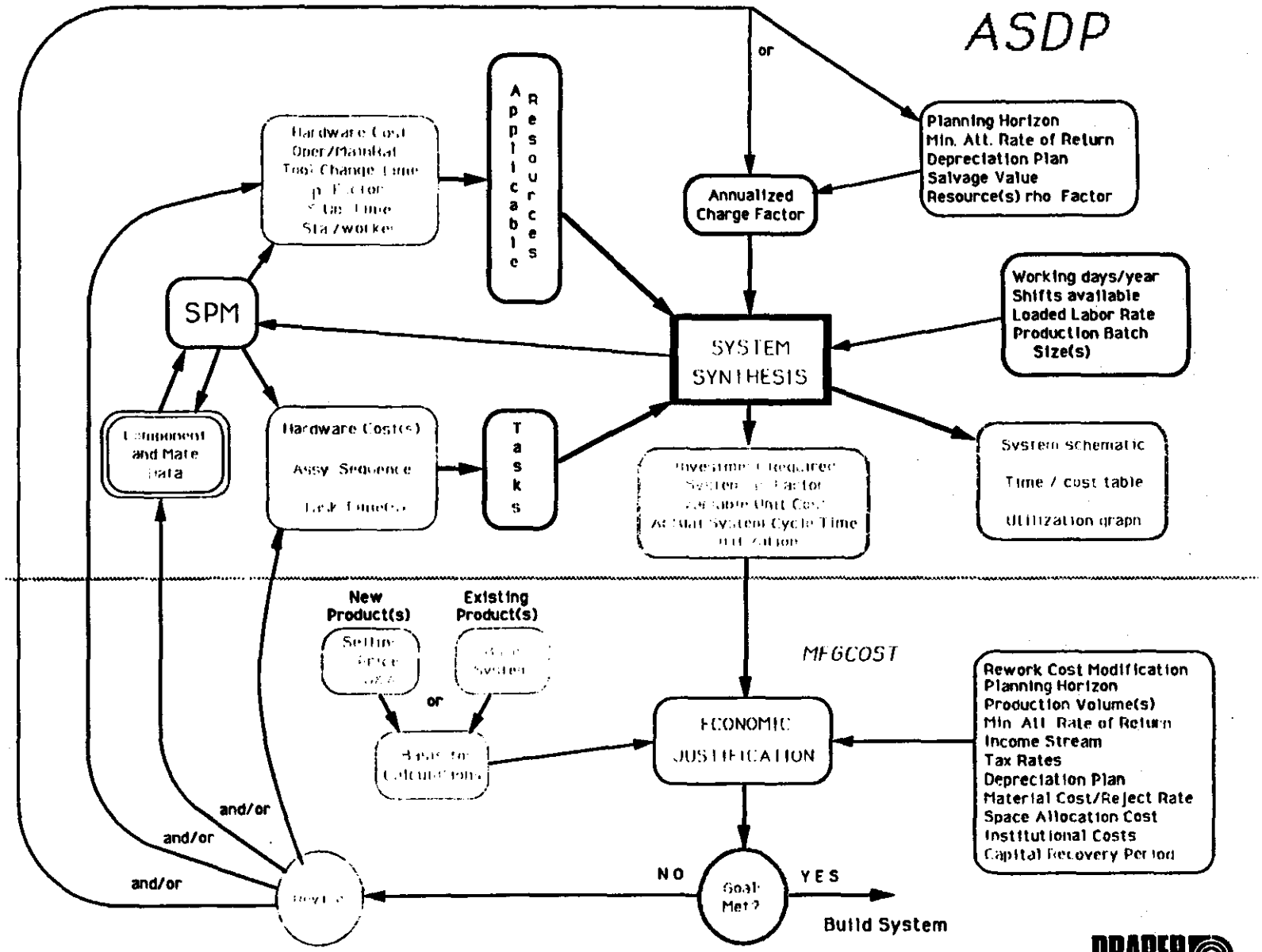

REG
05 August 1991

DRAPER LABORATORY

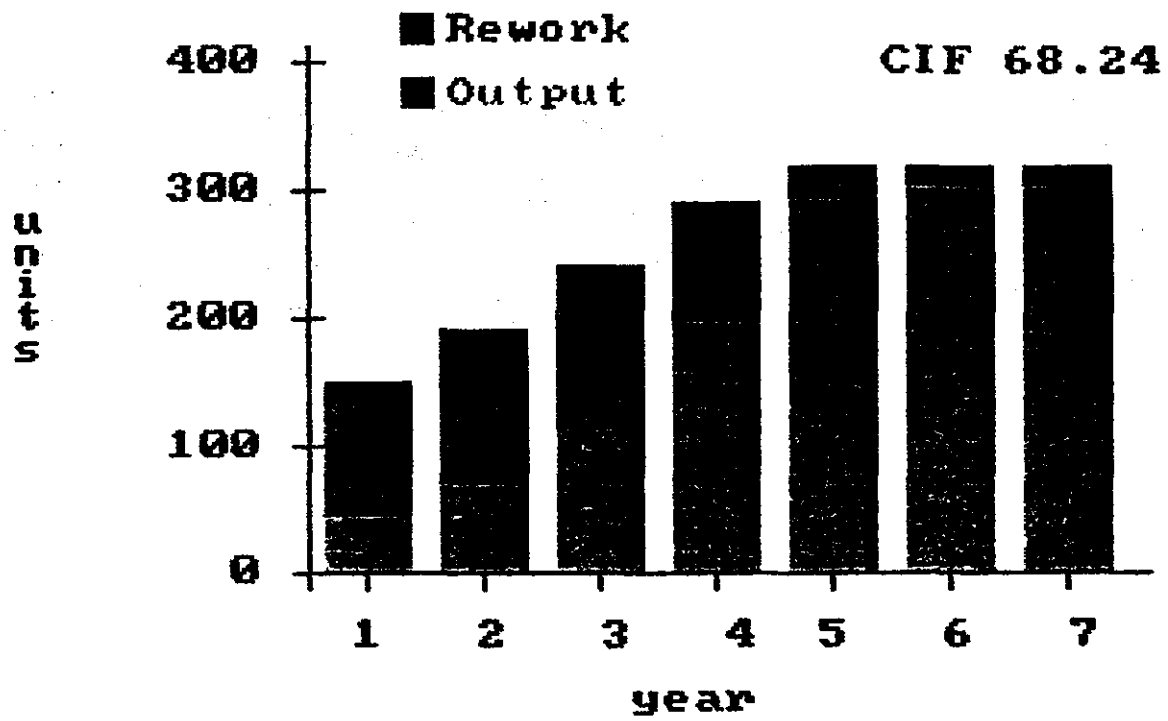
Rework
Output
CIF 68.24
400
300
200
100
0
units
1
2
3
4
5
6
7
year

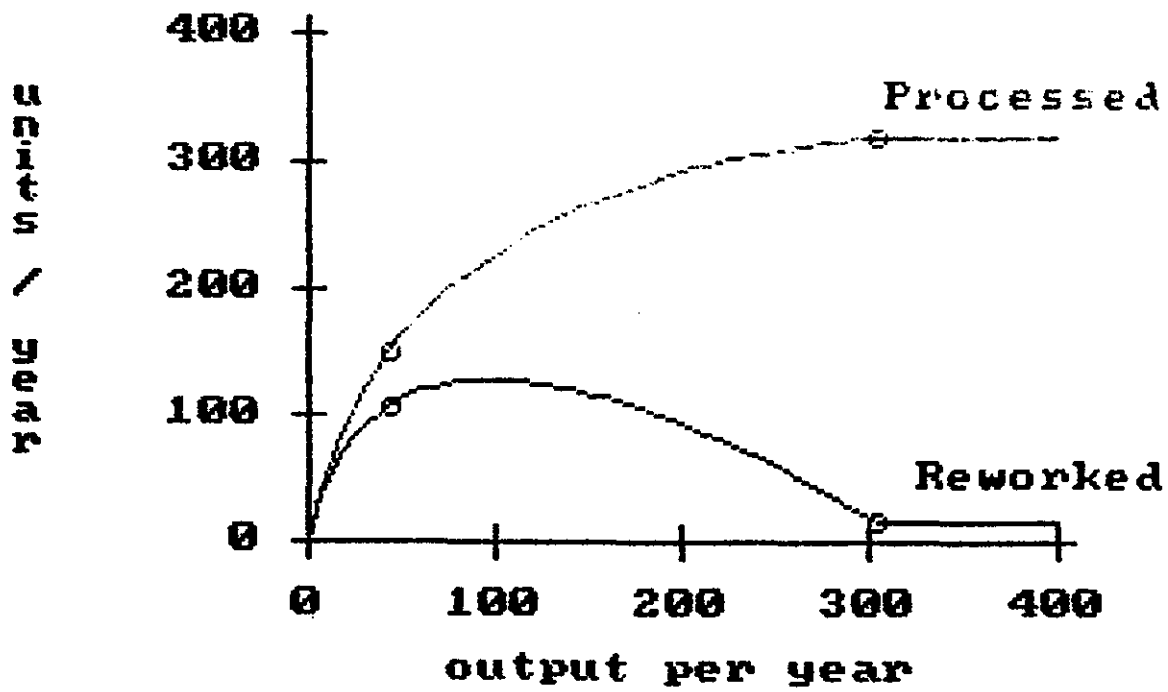
400
300
200
100
0
units / year
Processed
Reworked
0
100
200
300
400
output per year

Assembly System Design Program (ASDP)

Utilizes company economic criteria / data as well as the task / resource matrix.

General Solution

1. Table of costs and resource assignments
2. Graph of expected unit costs
3. Graph of workstation requirements
4. Graph of investment needed

Specific Solution

1. Listing of time and cost allocations
2. System schematic
3. Cost vs. batch size vs. utilization graph

DRAPER LABORATORY

Barrel

Section

Details

GEM Muon Barrel Assy.

3in O.D. tube

2in x 4in. pipe

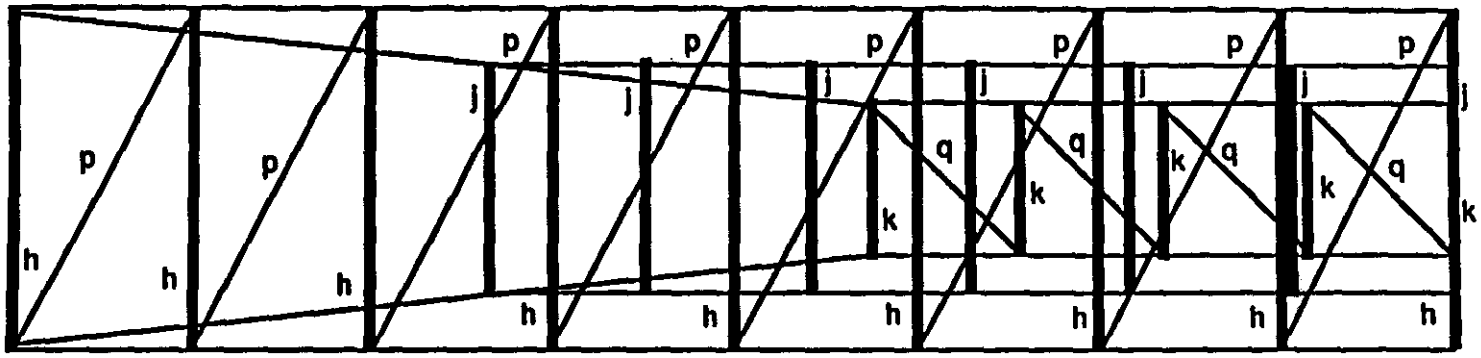

Side detail omitted

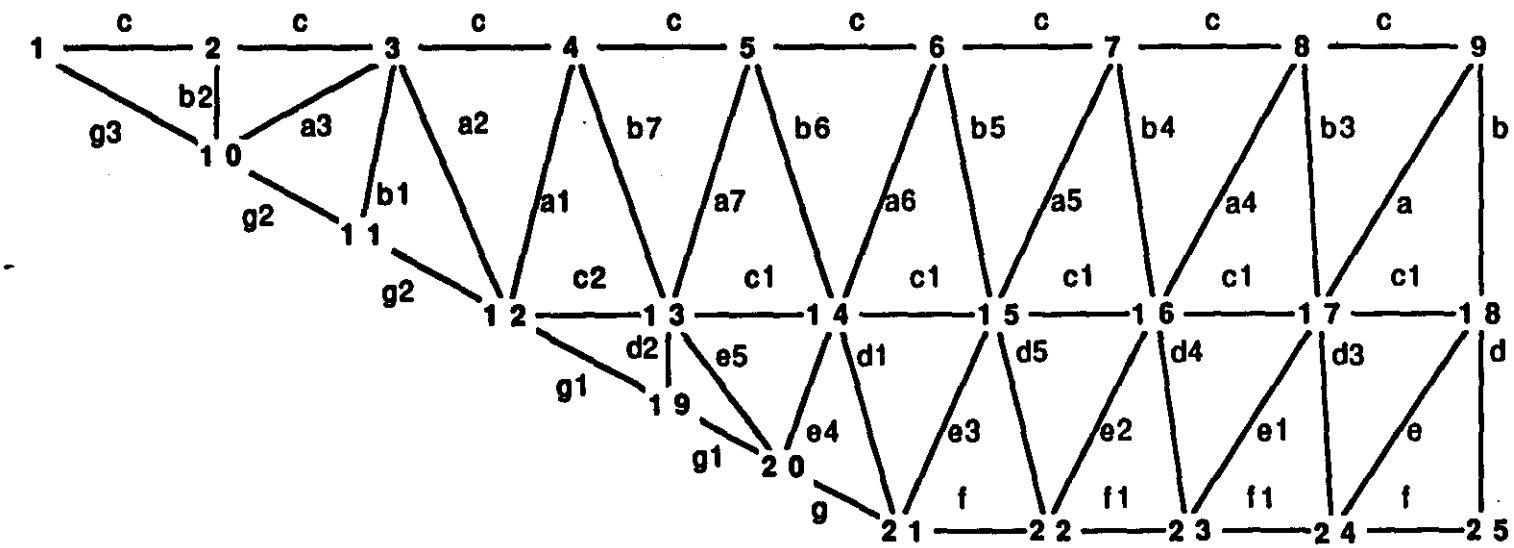

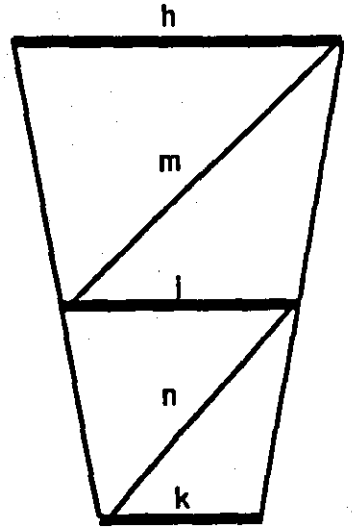

R.E. Gustavson 23 April 1992

Joint Configuration Requirements

Barrel Section

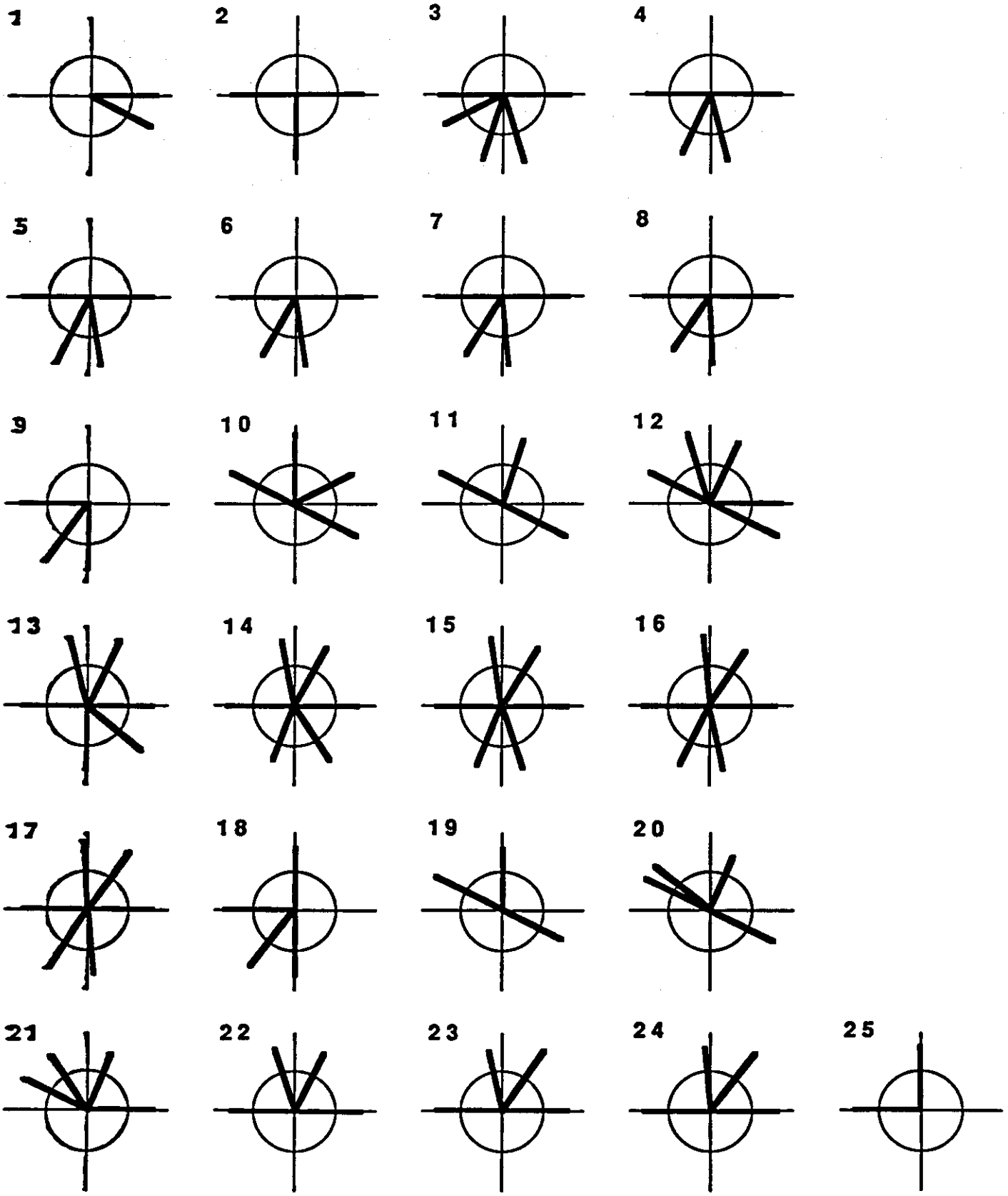

R.E. Gustavson 22 April 1992

Structure

Assembly

Procedure

Tentative Assembly Procedure - Barrel Section
Final Unit

An assembly fixture with appropriate locating pins, clamps, etc. is used.

Procedure for left side - right side is generally symmetrically opposite.

task	description	time estimate
1	Place outside half of joints 9, 18 and 25 into fixture. *(2 min. each)*	0.15 hr
2	Place outside half of joints 8, 17 and 24 into fixture.	0.15 hr
3	Place outside half of joints 7, 16 and 23 into fixture.	0.15 hr
4	Place outside half of joints 6, 15 and 22 into fixture.	0.15 hr
5	Place outside half of joints 5, 14 and 21 into fixture.	0.15 hr
6	Place outside half of joints 4, 13, 19 and 20 into fixture.	0.15 hr
7	Place outside half of joints 3, 11 and 12 into fixture.	0.15 hr
8	Place outside half of joints 1, 2 and 10 into fixture.	0.15 hr
9	Locate tubes f, d, e, c_1, b, a and c onto fixture. *(6 min. each)*	1.05 hr
10	Assemble inside half of joints 9, 18 and 25; secure with bolt. *(10 min. each)*	0.90 hr
11	Secure all clevised tube ends (9) with a bolt. *(8 min. each)*	1.80 hr
12	Locate tubes f_1, d_3, e_1, c_1, b_3, a_4 and c onto fixture.	1.05 hr

13	Assemble inside half of joints 8, 17 and 24; secure with bolt.	0.90 hr
14	Secure all clevised tube ends (14) with a bolt.	2.80 hr
15	Locate tubes f_1, d_4, e_2, c_1, b_4, a_5 and c onto fixture.	1.05 hr
16	Assemble inside half of joints 7, 16 and 23; secure with bolt.	0.90 hr
17	Secure all clevised tube ends (14) with a bolt.	2.80 hr
18	Locate tubes f_1, d_5, e_3, c_1, b_5, a_6 and c onto fixture.	1.05 hr
19	Assemble inside half of joints 6, 15 and 22; secure with bolt.	0.90 hr
20	Secure all clevised tube ends (14) with a bolt.	2.80 hr
21	Locate tubes g, d_1, e_4, c_1, b_6, a_7 and c onto fixture.	1.05 hr
22	Assemble inside half of joints 5, 14 and 21; secure with bolt.	0.90 hr
23	Secure all clevised tube ends (14) with a bolt.	2.80 hr
24	Locate tubes g_1, d_2, e_5, c_2, g_1, b_7, a_1 and c onto fixture.	1.20 hr
25	Assemble inside half of joints 4, 13, 19 and 20; secure with bolt.	1.20 hr
26	Secure all clevised tube ends (17) with a bolt.	3.40 hr
27	Locate tubes g_2, a_2, b_1, g_2, a_3 and c onto fixture.	0.90 hr
28	Assemble inside half of joints 3, 11 and 12; secure with bolt.	0.90 hr
29	Secure all clevised tube ends (13) with a bolt.	2.60 hr

30	Locate tubes g_3, b_2 and c onto fixture.	0.45 hr
31	Assemble inside half of joints 1, 2 and 10; secure with bolt.	0.90 hr
32	Secure all clevised tube ends (13) with a bolt.	2.60 hr
	TOTAL time for left half	38.10 hr
33-64	Time for right half	38.10 hr
65	Raise outer portion of both sides (in fixture which contains hydraulic actuation) to 11.25 deg. from vertical. Clamp in sector fixture.	0.50 hr
66	Locate (5) k pipes and (4) q tubes onto existing joints.	1.35 hr
67	Assemble interior clamp for joints 21, 22, 23, 24 and 25.	1.50 hr
68	Secure all clevised pipe ends (18) with a bolt.	3.60 hr
69	Locate tube n onto existing joints.	0.15 hr
70	Assemble interior clamp for joints 18 and 25	0.60 hr
71	Secure all clevised pipe ends (2) with a bolt.	0.40 hr
72	Locate (7) j pipes onto existing joints.	1.05 hr
73	Assemble interior clamp for joints 12, 13, 14, 15, 16, 17 and 18.	2.10 hr
74	Secure all clevised pipe ends (14) with a bolt.	2.80 hr
75	Locate tube m onto existing joints.	0.15 hr
76	Assemble interior clamp for joints 9 and 18.	0.60 hr

77	Secure all clevised pipe ends (2) with a bolt.	0.40 hr
78	Locate (9) h pipes and (8) p tubes onto existing joints.	2.55 hr
79	Assemble interior clamp for joints 1, 2, 3, 4, 5, 6, 7, 8 and 9.	2.70 hr
80	Secure all clevised pipe ends (34) with a bolt.	6.80 hr
	TOTAL time for consolidation	27.25 hr
	Total time to assemble structure	**103.45 hr**
		13 days

R.E. Gustavson 22 May 1992

Learning Characteristics

Assembly "System" Design

DRAPER LABORATORY

APPLICABLE TECHNOLOGY CHART

Title GEM Muon Barrel Assy. Date 23 April 1992

240	Working Days per Year	10 %	Min. Attractive Rate of Return
1	Shifts Available	2 yr	Capital Recovery Period
0 s	Station-to-Station Move Time	25	Average Loaded Labor Rate ($/h)

	Units	Days required
Production Batch Data	17	240

RESOURCE Data Set Name: MUBRLRES TASK Data Set Name: MUBRLTSK

For each resource:

- C Hardware cost ($)
- P Installed cost / Hardware cost - rho Factor
- ε Up-time expected (%)
- v Operating / Maintenance rate ($/hr)
- t_c Tool change time (sec)
- m_s Maximum stations per worker

when a resource can be used on a task:

Operation time (sec) | Tool number

Hardware cost ($)

TASK Number \ RESOURCE	MNI C: 500 P: 1.2 ε: 90 v: 3 t_c: 0 m_s: .83	KRT C: 20000 P: 1.2 ε: 90 v: 3 t_c: 0 m_s: 2	MNZ C: 500 P: 1.2 ε: 90 v: 3 t_c: 0 m_s: .83	C: P: ε: v: t_c: m_s:	C: P: ε: v: t_c: m_s:	C: P: ε: v: t_c: m_s:
1. Check Assy. stand	14400 101 60000					
2. Assemble Barrel Structure	345600 102 2000					
3. Adjust Structure	144000 103 20000					
4. Install Hardware	28800 102 2000					
5. Install (5) dummy chambers	72000 104 90000					
6. Install measuring hardware	57600 105 40000					
7. Calibrate structure	345600 106 5000					
8. Remove dummies & measuring eqpt.	129600 102 2000					
9. Move structure to module station		14400 201 0				
10. Install Muon chambers	129600 108 10000					
11 Install RPC chambers & support	129600 109 10000					

Prepared by: REG/ASK Sheet 1 of 2

APPLICABLE TECHNOLOGY CHART

Title GEM Muon Barrel Assy. Date 23 April 1992

_____ Working Days per Year

_____ Shifts Available

_____ s Station-to-Station Move Time

_____ % Min. Attractive Rate of Return

_____ yr Capital Recovery Period

_____ Average Loaded Labor Rate ($/h)

	Units	Days required
Production Batch Data		

RESOURCE Data Set Name: MUBRLRES TASK Data Set Name: MUBRLTSK

For each resource:

- C Hardware cost ($)
- P Installed cost / Hardware cost - rho Factor
- ε Up-time expected (%)
- v Operating / Maintenance rate ($/hr)
- t_c Tool change time (sec)
- m_s Maximum stations per worker

when a resource can be used on a task:

Operation time (sec) | Tool number

Hardware cost ($)

TASK Number \ RESOURCE	MN1 (C: p: ε: v: t_c: m_s:)	KRT (C: p: ε: v: t_c: m_s:)	MN2 (C: p: ε: v: t_c: m_s:)	(C: p: ε: v: t_c: m_s:)	(C: p: ε: v: t_c: m_s:)	(C: p: ε: v: t_c: m_s:)
12. Install piping & cabling	259200 110 10000					
13. Gas & Elect. test			129000 301 50000			
14. Install alignment & compensators	129000 112 10000					
15. Alignment test			172800 302 50000			
16. Move to rotation station		14400 201 0				
17. Adjust module in assigned position	115200 114 80000					
18. Remove from station	28800 115 5000					
19. Move to transport fixture	14400 116 30000					

Prepared by: REG/ASK

Sheet 2 of 2

GEM Muon Barrel Assy.

ASSEMBLY SYSTEM DESIGN 04-23-1992 17:04:15

A. S. D. P. Version 6.0

10.00% Minimum Attractive Rate of Return

2 year Capital Recovery Period

61.22% Capital Equipment Residual Value
22.22% Tooling Residual Value

25.00 Average Loaded Labor Rate ($/hr)

240 Working Days per Year

1.00 Shifts available

1 Maximum Intervening Non-assigned Tasks for any Resource

0.00 seconds Station to Station Move Time

Resource Data Set Name : MUBRLRES

Task Data Set Name : MUBRLTSK

GEM Muon Barrel Assy.

SYNTHESIZED ASSEMBLY SYSTEM 04-23-1992 17:04:40

A. S. D. P. Version 6.0

17 units in Production Batch

Unused Resource Available Time Scale Factor 1.000

240.0 Days for 1.0 Shifts; 240 Days for 1.00 Shifts

Resources

	* MN1	KRT	MN2
Avltime	365929	365929	365929
Nsta	6.0	1.0	1.0
Wrkr	7.2	0.5	1.2
Vrate	0.1200	0.1200	0.1200
Esttime	129600	14400	151200
Vrstlty	1.0	1.0	1.0

Synthesized System

Task	Resource used	Resource Cost	Variable Cost	Operation Time	Tool Change	Tool Number	Suppor Cost
1	MN1- 1	200	58058	14400.0	0.0	101	34022
2	MN1- 1	0	5440	345600	0.0	102	1134
3	MN1- 2	200	60098	144000	0.0	1103	11341
4	MN1- 2	0	453	28800.0	0.0	1102	1134
5	MN1- 2	0	1133	72000.0	0.0	1104	51033
6	MN1- 2	0	907	57600.0	0.0	1105	22681
7	MN1- 3	200	63271	345600	0.0	2106	2835
8	MN1- 4	200	59871	129600	0.0	3102	1134
9	KRT- 1	7998	24227	14400.0	0.0	201	(
10	MN1- 4	0	2040	129600	0.0	3108	567(
11	MN1- 5	200	59871	129600	0.0	4109	567(
12	MN1- 6	200	61911	259200	0.0	5110	567(
13	MN2- 1	200	59871	129600	0.0	301	1999
14	MN1- 7	200	59871	129600	0.0	6112	567(
15	MN2- 1	0	2720	172800	0.0	302	1999
16	KRT- 2	7998	24227	14400.0	0.0	1201	(

17	MN1- 8	200	59645	115200	0.0	7114	45363
18	MN1- 8	0	453	28800.0	0.0	7115	2835
19	MN1- 8	0	227	14400.0	0.0	7116	17011

Resource	Total Cost	Number used	Time used	Unit Cost Fixed	Unit Cost Variable	Number of Tasks	Number of Tools	Number of Workers
MN1	708056	8	400000	12636	29015	15	15	9.64
KRT	64449	2	16000.0	940.902	%2850.1962890625		2	0
1.00								
MN2	102780	1	336000	2364	3682	2	2	1.20
		Totals		15941	35547			11.84

0.01 Units per Hour
400000.0 seconds Cycle Time Expected
90.00 % Bottleneck Station Up-time Expected
17 units Production Capacity of this System
33.00 $/hr System Operating/Maintenance Rate

875284 Cost ($) to produce 17 units, with Unit Cost ($) 51487

System Annualized Charge Factor 0.4339

624600 ($) Total Investment required
520500 ($) for required Hardware

182100 ($) Capital equipment
338400 ($) Tooling

GEM Muon Barrel Assy.

17 Units $51487 Each 400000s Cycle Time 1.0 Shifts 1.000 AF

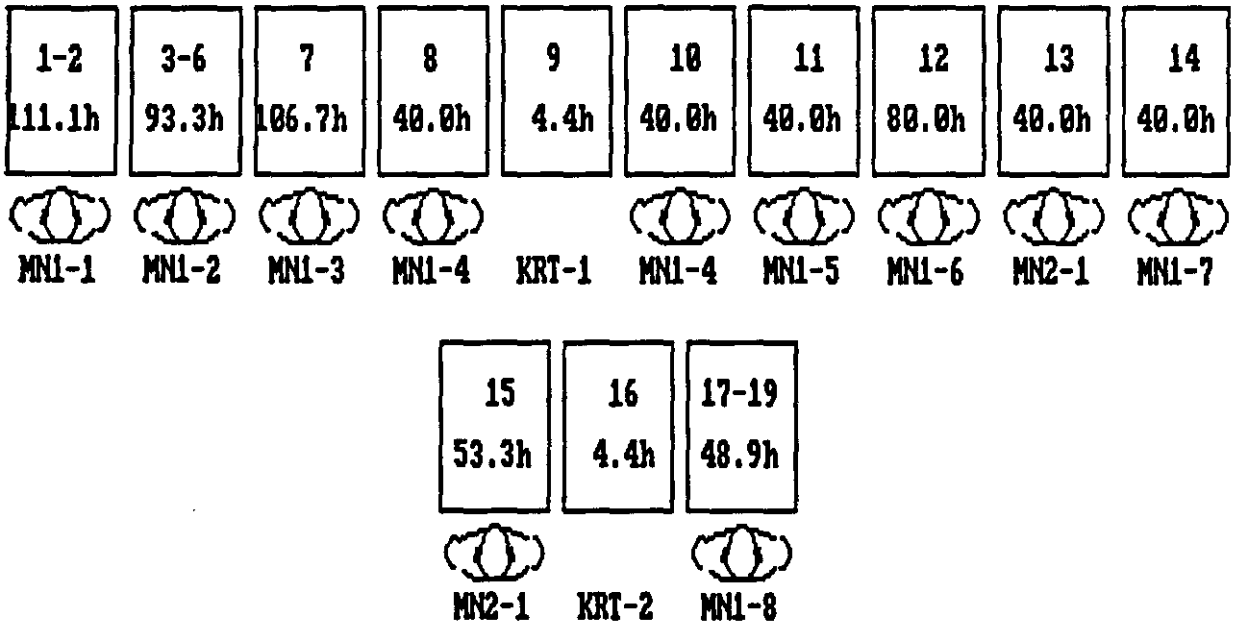

GEM Muon Barrel Assy.

SYNTHESIZED ASSEMBLY SYSTEM 04-23-1992 17:05:17

A. S. D. P. Version 6.0

17 Units in Production Batch
Actual Unit Cost ($) 51487

111.11 hours Usable Cycle Time
90.0 % Bottleneck up-time 0.01 Units/hr expected
17 units Actual Capacity of this System

624600 ($) Total Investment, rho Factor = 1.20
182100 ($) Capital equipment 338400 ($) Tooling

11.84 Workers at 25.00 $/hr required
9.00 Direct 2.84 Indirect

33.00 $/hr System Operating/Maintenance Rate

0.984 Year required for 1.0 Shift Operation
240 Days required for 0.98 Shift Operation

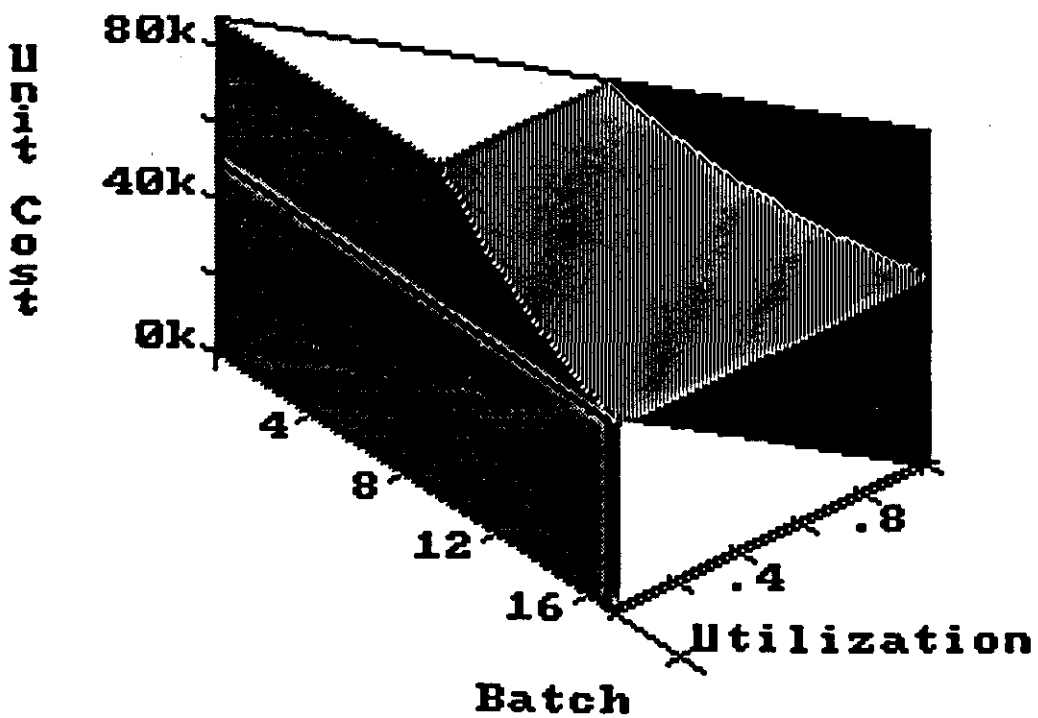

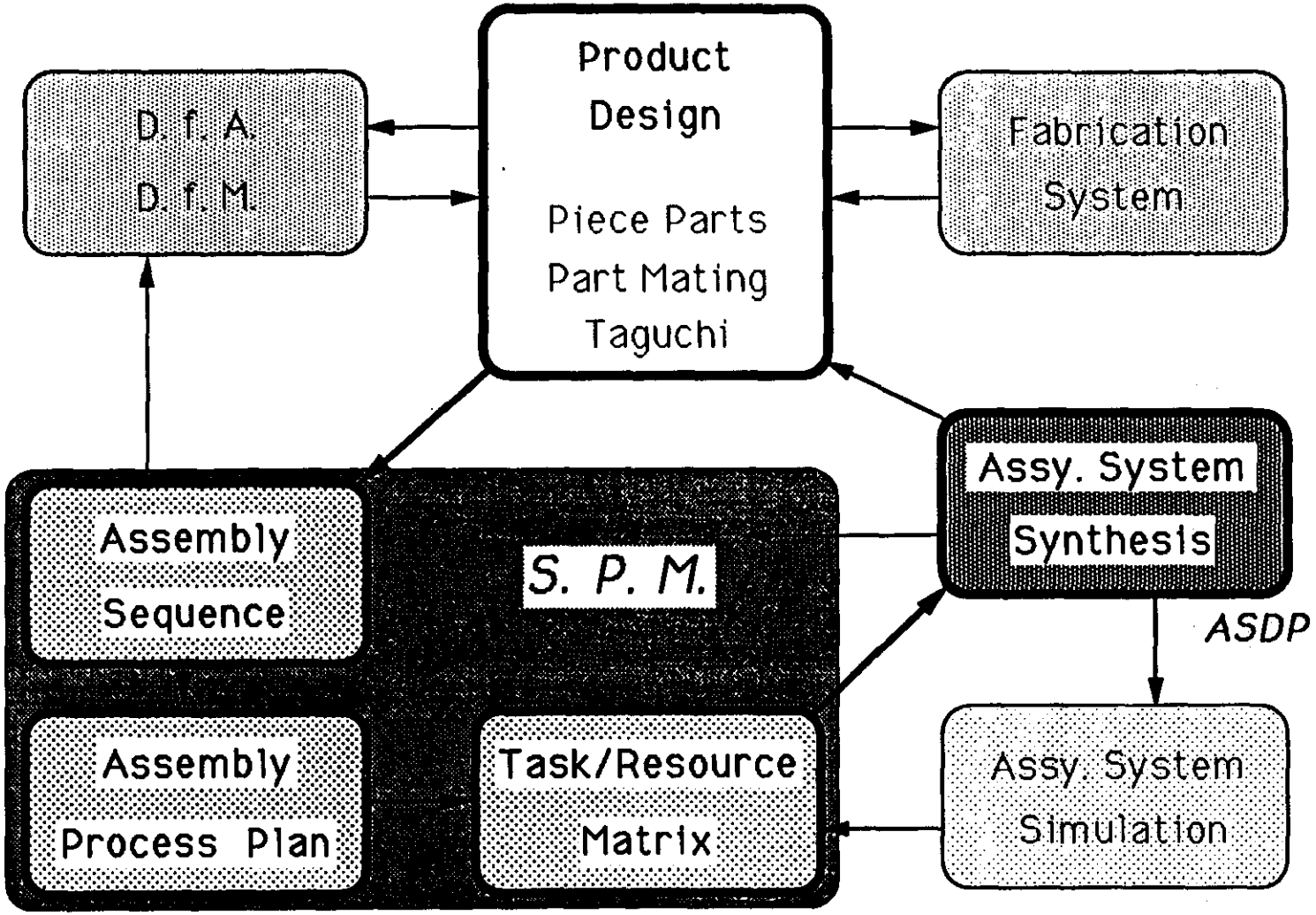

DRAPER LABORATORY

S. P. M.

Version 2.0

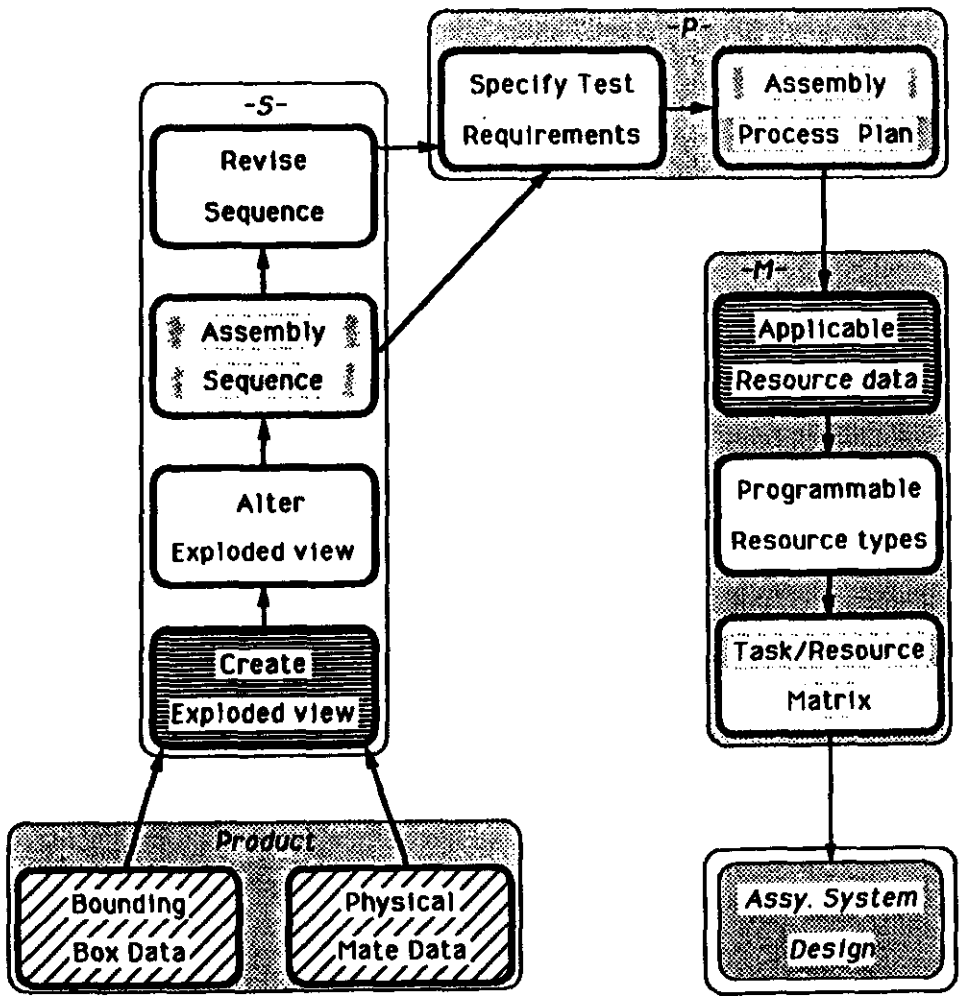

Key

- Data Base (or user input)
- User interaction required
- Intermediate result
- Major result (usually printed)

DRAPER

GEM

Muon Subsystem Cost Matrix

Revision 11

16 June 1992

DRAPER LABORATORY

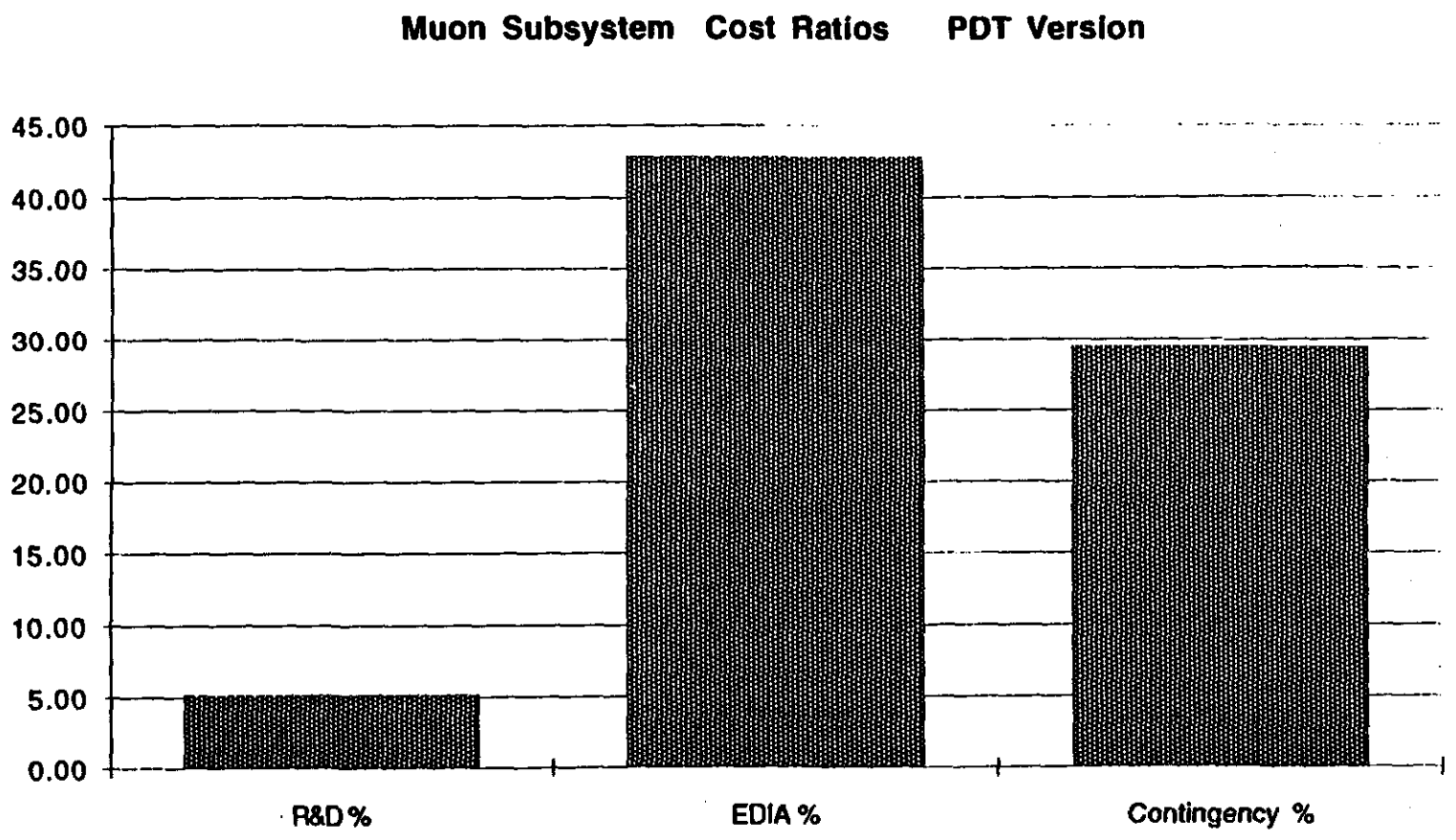
Muon Subsystem Cost Ratios PDT Version
45.00
40.00
35.00
30.00
25.00
20.00
15.00
10.00
5.00
0.00
R&D %
EDIA %
Contingency %

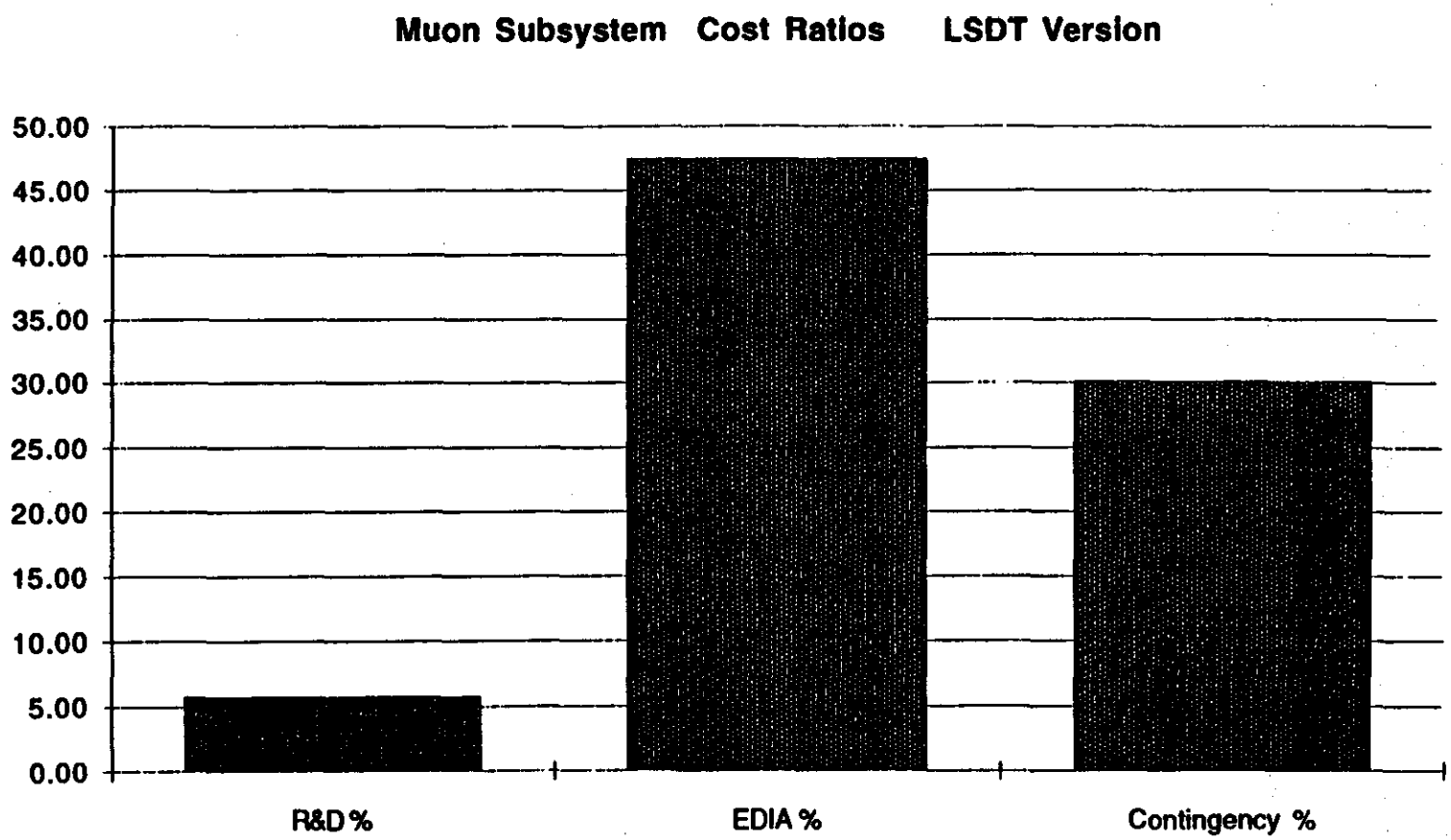
Muon Subsystem Cost Ratios LSDT Version
50.00
45.00
40.00
35.00
30.00
25.00
20.00
15.00
10.00
5.00
0.00
R&D %
EDIA %
Contingency %

Muon Subsystem Cost Summary - Rev. 11 (w/o chamber electronics) 6/16/92

WBS No.	Item	Engrg/Design	M&S	Insp/Admin	Materials	Assembly	Installation	Equipment	Sub-total	Contingency	Total
(-3.1)	Totals - PDT	10.117	3.039	10.508	21.211	18.296	2.416	7.377	72.96	20.59	93.550
(-3.2)	Totals - LSDT	10.117	3.033	10.474	17.003	17.596	2.416	7.377	68.016	19.086	87.102
03.1.1	Central Region - PDT	4.433	0.962	3.923	14.045	12.936	1.439	4.602	42.34	12.368	54.708
03.1.1.1	Installation	0.891	0.075	0.221	0.56	0	1.439	2.31	5.496	1.322	6.818
03.1.1.2	Sector Assembly	1.668	0.408	2.822	10.805	11.448	0	2.132	29.283	8.55	37.833
03.1.1.2.3	PDT chambers	0.332	0.086	0.904	8.078	6.882	0	0.355	16.637	4.949	21.586
03.1.1.2.4	RPC chambers	0.332	0.089	0.934	1.491	2.7	0	0.346	5.892	1.734	7.626
03.1.1.2.5	Structure	0.555	0.072	0.422	0.292	0.906	0	0.856	3.103	1.043	4.146
03.1.1.2.6	Alignment	0.153	0.112	0.407	0.684	0.264	0	0	1.62	0.345	1.965
03.1.1.3	Electronics	0.153	0.075	0.154	0.2	0.19	0	0	0.772	0.178	0.95
03.1.1.4	Gas Systems	1.257	0.334	0.57	2.08	0.638	0	0.16	5.039	1.618	6.657
03.1.1.5	Cooling Systems	0.464	0.07	0.156	0.4	0.66	0	0	1.75	0.7	2.45
03.2.1	Central Region - LSDT	4.433	0.96	3.889	9.837	12.236	1.439	4.602	37.396	10.864	48.26
03.2.1.1	Installation	0.891	0.075	0.221	0.56	0	1.439	2.31	5.496	1.322	6.818
03.2.1.2	Sector Assembly	1.668	0.406	2.788	6.597	10.748	0	2.132	24.339	7.046	31.385
03.2.1.2.3	LSDT chambers	0.332	0.086	0.882	3.663	6.248	0	0.355	11.566	3.428	14.994
03.2.1.2.4	RPC chambers	0.332	0.089	0.934	1.491	2.7	0	0.346	5.892	1.734	7.626
03.2.1.2.5	Structure	0.555	0.089	0.422	0.292	0.906	0	0.856	3.12	1.043	4.163
03.2.1.2.6	Alignment	0.153	0.112	0.407	0.684	0.264	0	0	1.62	0.345	1.965
03.2.1.3	Electronics	0.153	0.075	0.154	0.2	0.19	0	0	0.772	0.178	0.95
03.2.1.4	Gas Systems	1.257	0.334	0.57	2.08	0.638	0	0.16	5.039	1.618	6.657
03.2.1.5	Cooling Systems	0.464	0.07	0.156	0.4	0.66	0	0	1.75	0.7	2.45
03.1.2	End Cap Region	2.501	0.584	3.289	7.166	5.36	0.977	2.775	22.652	7.002	29.654
03.1.2.1	Installation	0.297	0.036	0.182	0.311	0	0.977	1.5	3.303	0.795	4.098
03.1.2.2	Sector Assembly	1.341	0.332	2.26	4.734	4.477	0	1.145	14.289	4.577	18.866
03.1.2.2.3	CSC chambers	0.332	0.066	0.864	3.353	3.397	0	0.042	8.074	2.906	10.98
03.1.2.2.4	Structure	0.555	0.14	0.768	0.084	0.487	0	0.453	2.487	0.772	3.259
03.1.2.2.5	Alignment	0.157	0.074	0.473	1.112	0.22	0	0	2.036	0.489	2.525
03.1.2.3	Electronics	0.155	0.017	0.142	0.631	0.119	0	0	1.064	0.245	1.309
03.1.2.4	Gas Systems	0.629	0.167	0.265	1.04	0.319	0	0.08	2.52	0.809	3.329
03.1.2.5	Cooling Systems	0.079	0.032	0.42	0.45	0.445	0	0.05	1.476	0.576	2.052
03.1.3	Project Mgmt.	0	0.435	3.296	0	0	0		3.731	0.373	4.104
13	R&D	1.791	0.754	0	0	0	0		2.545	0.509	3.054
23	Concept Design	1.392	0.3	0	0	0	0		1.692	0.338	2.03

GEM Muon Subsystem Cost Matrix

changes made for Revision 11

1. Contingencies were altered in the following way:

Group	Technical Risk	Technical Pct.	Cost Risk	Cost Pct.	Schedule Risk	Schedule Pct.	Total
PDT	8	2	6	1	8	1	30%
LSDT	8	2	6	1	8	1	30%
RPC	8	2	6	1	8	1	30%
CSC	10	2	8	1	8	1	36%
Structure	8	2	10	1	8	1	34%
Gas Systems	8	2	10	1	8	1	34%
Fixture Design	2	2	15	1	8	1	27%

2. Net change (excluding electronics): PDT: -2.71 M$, LSDT: -2.40 M$.

17 June 1992

DRAPER LABORATORY

Muon Subsystem PDT Barrel Sector Assembly

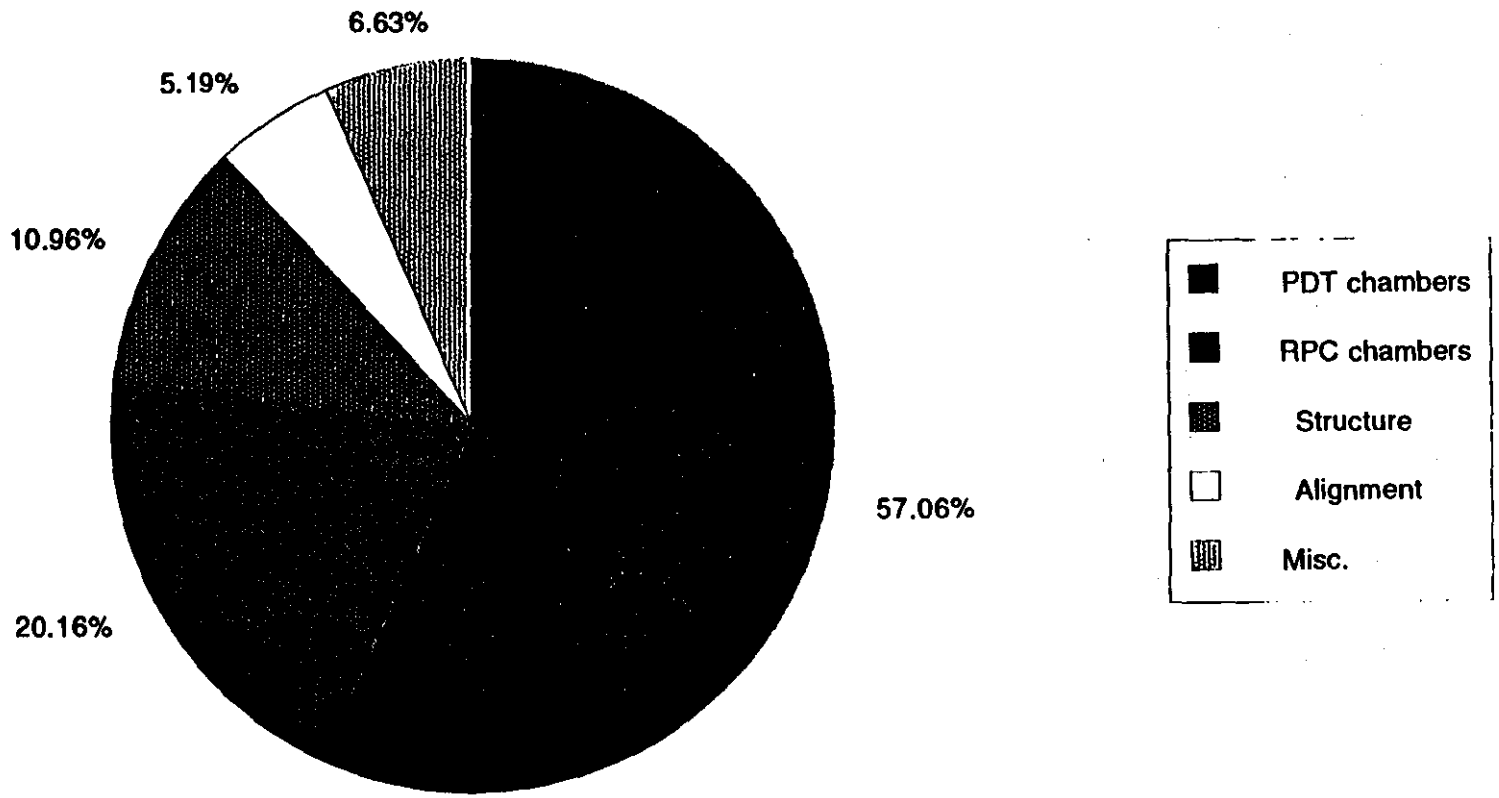

Muon Subsystem LSDT Barrel Sector Assembly

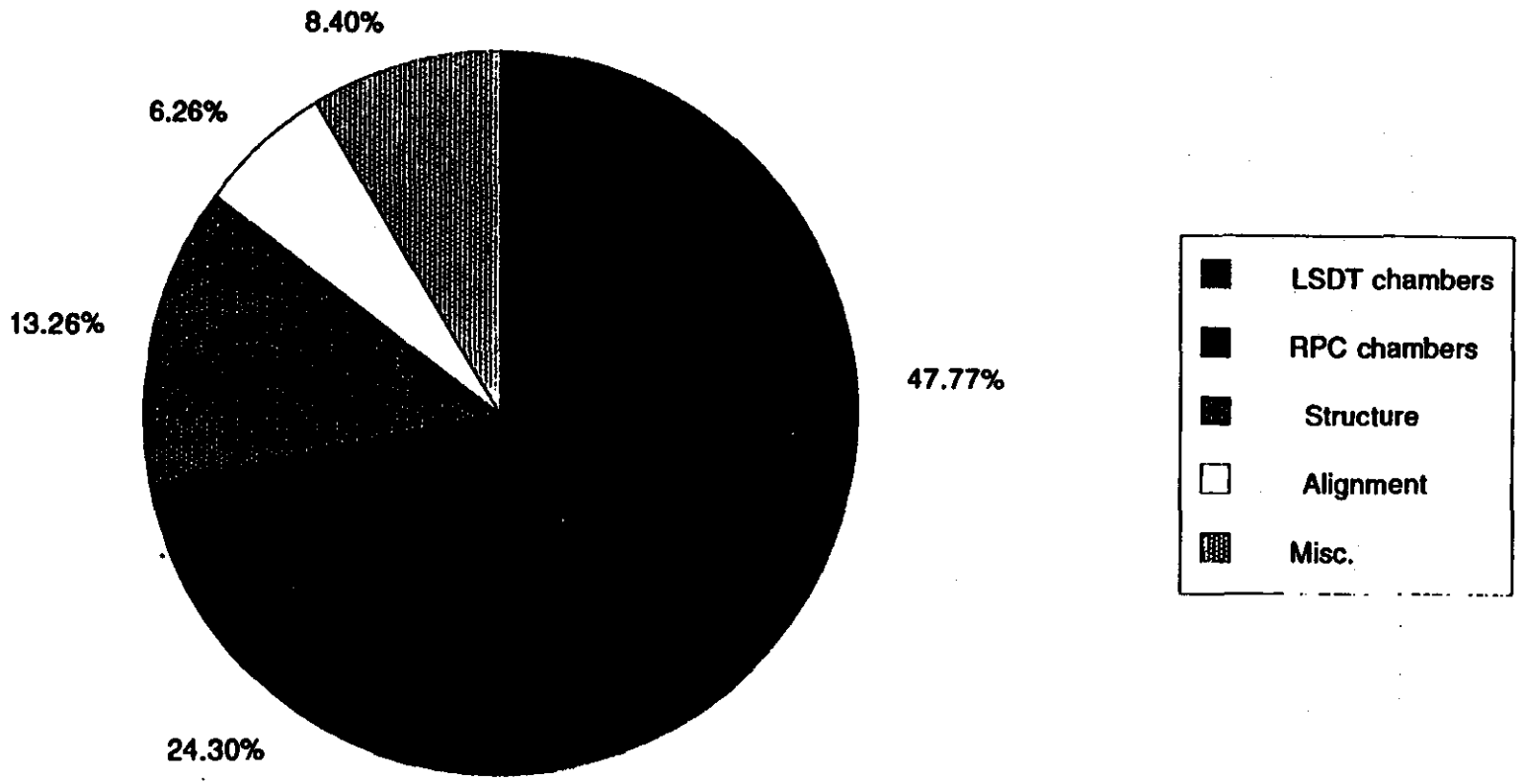

Muon Subsystem End Cap Sector Assembly

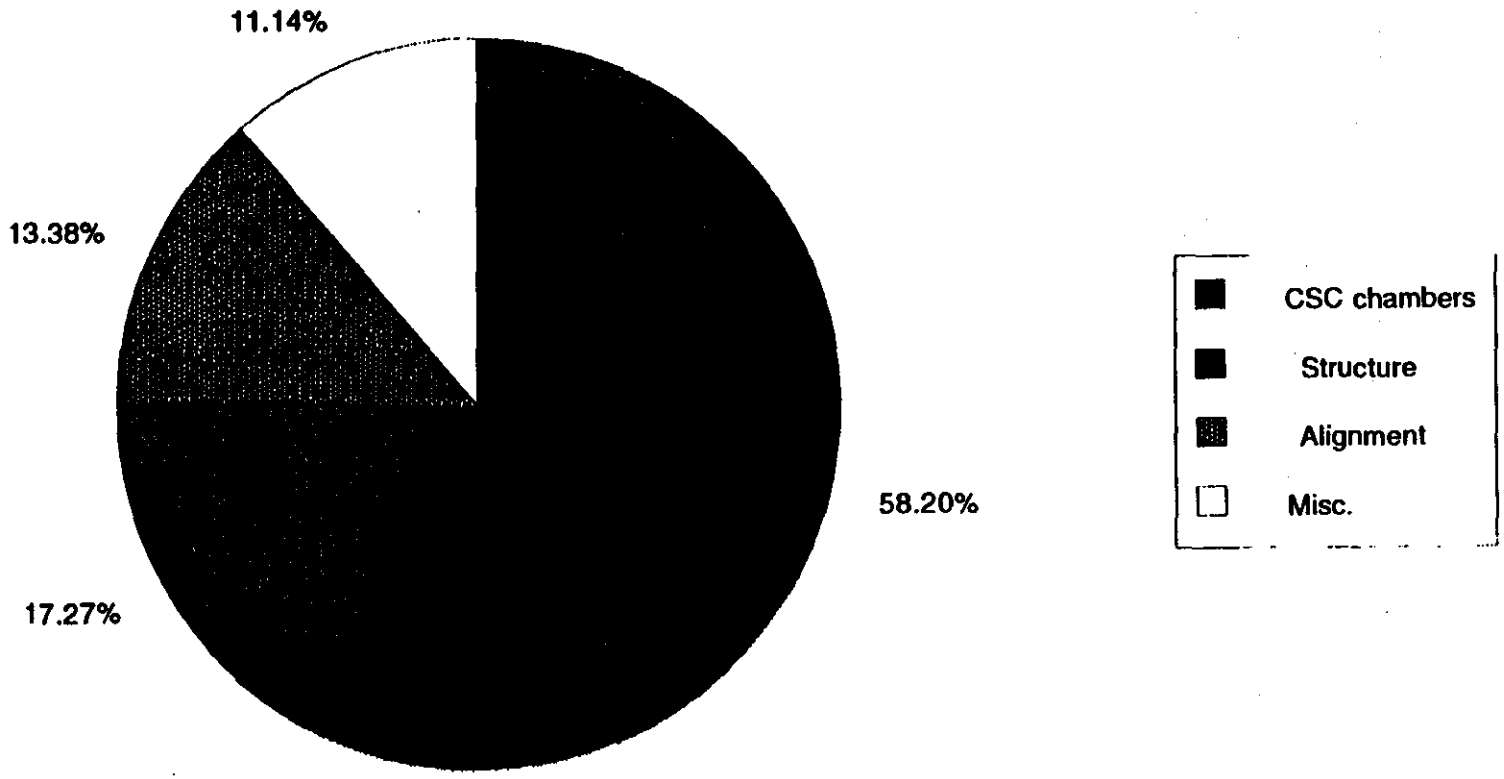

MUON SUBSYSTEM COST MATRIX Rev 11 8/16/92

		Engineering/Design			M&S	Inspection/Admin			Proc/Fab	Assembly				
		Labor	Rate	Total		Labor	Rate	Total	Material	Labor	Rate	Subtotal	Capt. Eqpt.	Tooling
WBS no.	Item	my	k$/my	k$	k$	my	k$/my	k$	k$	my	k$/my	k$	k$	k$
(-3.1)	PDT Muon Detector cost	95.2	106	10116	3035	97.7	108	10508	21211	272.2	62	16825	2391	1176
(-3.2)	LSDT Muon Detector cost	95.2	106	10116	3033	97.5	107	10474	17003	253.3	64	16086	2341	1226
					Sub-group 03.1 is used for all construction breakdown categories except those which an									
03.1 - PDT	Muon Subsys. Construction PDT	71.54	97	6933	1981	97.69	108	10508	21211	272.23	62	16825	2391	1176
03.2 - LSDT	Muon Subsys. ConstructionLSDT	71.54	97	6933	1979	97.49	107	10474	17003	253.31	64	16086	2341	1226
03.1.1-PDT	Central Region	46.04	96	4433	962	43.00	91	3923	14045	190.80	63	12028	1586	706
03.2.1-LSDT	Central Region	46.04	96	4433	960	42.80	91	3890	9837	171.88	66	11288	1536	756
03.1.1.1	Central Region Installation	9.00	99	891	75	3.51	63	221	560					
03.1.1.1.1	On-Site	0.00		0	8	1.38		95	260					
03.1.1.1.1.1	Test				0	0.00		0	10					
03.1.1.1.1.2	Mechanical Assembly				3	0.50	69	35	75					
03.1.1.1.1.3	Electrical/Electronics Assy				2	0.38	69	26	75					
03.1.1.1.1.4	Fac Prep				3	0.50	69	35	100					
03.1.1.1.2	Off-Site	9.00		891	67	2.13		126	300					
03.1.1.1.2.1	Install. Tool Fnl Dsgn, Mach, Assy	9.00	99	891	67	2.13	59	126	300					
03.1.1.2	Central Region Sector Assy-PDT	15.82	105	1668	408	30.08	94	2822	10805	172.80	62	10728	1586	546
03.2.1.2	Central Region Sector AssyLSDT	15.82	105	1668	406	29.88	93	2788	6597	153.88	65	9988	1536	596
03.1.1.2.1	On-Site	0.00		0	9	1.44		99	175	12.83	47	602	375	200
03.1.1.2.1.1	Sector Storage			0	0	0.00		0	0			0		
03.1.1.2.1.2	Test			0	3	0.56	69	39	25	1.25	52	65	100	
03.1.1.2.1.3	Assembly			0	4	0.63	69	43	100	10.83	46	498	275	200
03.1.1.2.1.4	Fac Prep			0	2	0.25	69	17	50	0.75	52	39		
03.1.1.2.2	Off-Site	3.00		297	23	0.88		55	85	2.13		25	0	0
03.1.1.2.2.1	Assy Fixt Final Dsgn, Mach, Assy	3.00	99	297	23	0.88	63	55	85	2.13	55	25		
03.1.1.2.3	Pressurized Drift Tubes	3.25	102	332	86	9.49	95	904	8078	109.87	60	6596	300	55
03.1.1.2.3.1	Off-Site	3.25		332	86	9.49		904	8078	109.87		6596	300	55
03.1.1.2.3.1.1	Shipping				2	0.23	69	16	50	0.46	107	49		
03.1.1.2.3.1.2	Test				3	0.50	133	67	28	5.66	110	623		

MUON SUBSYSTEM COST MATRIX Rev 11 6/16/92

		Engineering/Design			M&S	Inspection/Admin			Proc/Fab	Assembly				
		Labor	Rate	Total		Labor	Rate	Total	Material	Labor	Rate	Subtotal	Captl. Eqpt.	Tooling
WBS no.	Item	my	k$/my	k$	k$	my	k$/my	k$	k$	my	k$/my	k$	k$	k$
03.1.1.2.3.1.3	Assembly				14	2.25	133	299	50	20.00	98	1960	300	55
03.1.1.2.3.1.4	Facility Prep				5	0.75	133	100	0	3.75	97	364		
03.1.1.2.3.1.5	Machining, Inspection				42	5.63	72	405	7950	80.00	45	3600		
03.1.1.2.3.1.6	Final Design, Drwg/Spec Mods	3.25	102	332	20	0.13	133	17						
0.3.2.1.2.3	Limited Streamer Drift Tubes	3.25	102	332	86	9.49	93	882	3663	92.00	64	5916	250	105
03.2.1.2.3.1	Off-Site	3.25		332	86	9.49		882	3663	92.00		5916	250	105
03.2.1.2.3.1.1	Shipping				2	0.23	69	16	50	0.46	107	49		
03.2.1.2.3.1.2	Test				3	0.50	133	67	28	5.66	110	623		
03.2.1.2.3.1.3	Assembly				14	2.25	133	299	50	20.00	98	1960	250	105
03.2.1.2.3.1.4	Facility Prep				5	0.75	133	100	0	3.75	97	364		
03.2.1.2.3.1.5	Machining, Inspection				42	5.63	68	383	3535	62.13	47	2920		
03.2.1.2.3.1.6	Final Design, Drwg/Spec Mods	3.25	102	332	20	0.13	133	17						
03.1.1.2.4	Resistive Plate Counters	3.25	102	332	89	10.05	93	934	1491	32.67	78	2554	200	146
03.1.1.2.4.1	Off-Site	3.25		332	89	10.05		934	1491	32.67		2554	200	146
03.1.1.2.4.1.1	Shipping				2	0.23	133	31	50	0.46	107	49	0	
03.1.1.2.4.1.2	Test				3	0.50	133	67	0	5.50	109	600	50	
03.1.1.2.4.1.3	Assembly				14	2.25	133	299	50	4.16	113	470	150	100
03.1.1.2.4.1.4	Facility Prep				5	0.75	133	100	0	3.75	97	364		
03.1.1.2.4.1.5	Machining, Inspection				45	6.19	68	421	1391	18.80	57	1072	0	46
03.1.1.2.4.1.6	Final Design, Drwg/Spec Mods	3.25	102	332	20	0.13	133	17						
03.1.1.2.5	Sector Support Structures PDT	5.00	111	555	89	4.97	85	422	292	13.05	57	737	711	145
03.1.1.2.5.1	Off-Site	5.00		555	89	4.97		422	292	13.05		737	711	145
03.1.1.2.5.1.1	Shipping				2	0.25	69	17	20	0.50	44	22		
03.1.1.2.5.1.2	Machining, Inspection				48	3.97	75	298	272	12.55	57	715	711	145
03.1.1.2.5.1.3	Final Design, Drwg/Spec Mods	5.00	111	555	39	0.75	142	107	0	0	0	0		
03.2.1.2.5	Sector Support StructuresLSDT	5.00	111	555	87	4.77	86	410	259	12.00	56	678	711	145
03.2.1.2.5.1	Off-Site	5.00		555	87	4.77		410	259	12.00		678	711	145
03.2.1.2.5.1.1	Shipping				2	0.25	69	17	20	0.50	44	22		
03.2.1.2.5.1.2	Machining, Inspection				46	3.77	76	287	239	11.50	57	656	711	145
03.2.1.2.5.1.3	Final Design, Drwg/Spec Mods	5.00	111	555	39	0.75	142	107	0	0	0	0		
03.1.1.2.6	Alignment & Calibrtn Sys PDT	1.32	116	153	112	3.25	125	407	684	2.25	95	214	0	0
03.1.1.2.6.1	Local Chamber Alignment	0.66		77	52	1.63		204	534	1.00		95	0	0
03.1.1.2.6.1.1	Off-Site	0.66		77	52	1.63		204	534	1.00		95	0	0
03.1.1.2.6.1.1.1	Shipping				25	1.00	125	125		0.00	0	0		
03.1.1.2.6.1.1.2	Test				5	0.13	125	16		0.25	95	24		
03.1.1.2.6.1.1.3	Assembly				5	0.13	125	16		0.25	95	24		
03.1.1.2.6.1.1.4	Facility Prep				5	0.13	125	16	25	0.25	95	24		
03.1.1.2.6.1.1.5	Machining, Inspection				2	0.25	129	32	509	0.25	95	24	0	0
03.1.1.2.6.1.1.6	Final Design, Drwg/Spec Mods	0.66	116	77	10									

		Engineering/Design			M&S	Inspection/Admin			Proc/Fab	Assembly				
		Labor	Rate	Total		Labor	Rate	Total	Material	Labor	Rate	Subtotal	Captl. Eqpt.	Tooling
WBS no.	Item	my	k$/my	k$	k$	my	k$/my	k$	k$	my	k$/my	k$	k$	k$
03.2.1.2.6	Alignment & Calibrtn Sys LSDT	1	116	153	112	3	125	407	924	2	95	214	0	0
03.2.1.2.6.1	Local Chamber Alignment	0.66		77	52	1.63		204	774	1.00		95	0	0
03.2.1.2.6.1.1	Off-Site	0.66		77	52	1.63		204	774	1.00		95	0	0
03.2.1.2.6.1.1.1	Shipping				25	1.00	125	125		0.00	0	0		
03.2.1.2.6.1.1.2	Test				5	0.13	125	16		0.25	95	24		
03.2.1.2.6.1.1.3	Assembly				5	0.13	125	16		0.25	95	24		
03.2.1.2.6.1.1.4	Facility Prep				5	0.13	125	16	25	0.25	95	24		
03.2.1.2.6.1.1.5	Machining, Inspection				2	0.25	129	32	749	0.25	95	24	0	0
03.2.1.2.6.1.1.6	Final Design, Drwg/Spec Mods	0.66	116	77	10									
03.1.1.2.6.2	Global Sector/Region Monitor	0.66	116	77	60	1.63	125	203	150	1.25	95	119	0	0
03.1.1.2.6.2.1	Off-Site	0.66		77	60	1.63		203	150	1.25		119	0	0
03.1.1.2.6.2.1.1	Shipping				25	1.00	125	125		0.00	0	0		
03.1.1.2.6.2.1.2	Test				5	0.13	125	16		0.25	95	24		
03.1.1.2.6.2.1.3	Assembly				5	0.13	125	16		0.25	95	24		
03.1.1.2.6.2.1.4	Facility Prep				5	0.13	125	16	25	0.25	95	24		
03.1.1.2.6.2.1.5	Machining, Inspection				10	0.25	125	31	125	0.50	95	48		
03.1.1.2.6.2.1.6	Final Design, Drwg/Spec Mods	0.66	116	77	10									
03.1.1.3	Elctrnca/Elctr. Hrdwre - PDT	1.32	116	153	75	1.00	154	154	200	2.00	95	190	0	0
03.2.1.3	Elctrnca/Elctr. Hrdwre - LSDT	1.32	116	153	75	1.00	154	154	200	2.00	95	190	0	0
03.1.1.3.1	Pressurized Drift Tubes	0.00		0	0	0.00		0	0	0.00	0	0	0	0
03.1.1.3.1.1	Off-Site	6.46		970	1085	1.75		270	6611	0		0	0	0
03.1.1.3.1.1.1	Sense Electronics / Triggers	5.80	154	893	650	0.75	154	116	6053					
03.1.1.3.1.1.2	Calibration Electronics Des, Fab, Ship	0.66	116	77	15	0.50	154	77	250					
03.1.1.3.1.1.3	High / Low Voltage Systems	0.00	154	0	420	0.50	154	77	308					
03.2.1.3.1	Limited Streamer Drift Tubes	0.00		0	0	0.00		0	0	0.00	0	0	0	0
03.2.1.3.1.1	Off-Site	6.46		970	1085	1.75		270	5548	0		0	0	0
03.2.1.3.1.1.1	Sense Electronics / Triggers	5.80	154	893	650	0.75	154	116	5053					
03.2.1.3.1.1.2	Calibration Electronics Des, Fab, Ship	0.66	116	77	15	0.50	154	77	250					
03.2.1.3.1.1.3	High / Low Voltage Systems	0.00	154	0	420	0.50	154	77	245					
03.1.1.3.2	Resistive Plate Counters	0.00		0	0	0.00		0	0					
03.1.1.3.2.1	Off-Site	4.46		662	460	2.00		308	2092					
03.1.1.3.2.1.1	Beam Crossing / Triggers	3.80	154	585	420	1.00	154	154	1741					
03.1.1.3.2.1.2	Calibration Electronics Des, Fab, Ship	0.66	116	77	25	0.50	154	77	250					
03.1.1.3.2.1.3	High / Low Voltage Systems	0.00	154	0	15	0.50	154	77	101					
03.1.1.3.3	Align and Cal System Elec	1.32	116	153	75	1.00	154	154	200	2.00	95	190	0	0
03.1.1.3.3.1	Local Chamber Alignment	0.66		77	35	0.50		77	100	1.00		95	0	0

MUON SUBSYSTEM COST MATRIX Rev 11 6/16/92

		Engineering/Design			M&S	Inspection/Admin			Proc/Fab	Assembly				
		Labor	Rate	Total		Labor	Rate	Total	Material	Labor	Rate	Subtotal	Captl. Eqpt.	Tooling
WBS no.	Item	my	k$/my	k$	k$	my	k$/my	k$	k$	my	k$/my	k$	k$	k$
03.1.1.3.3.1.1	Off-Site Assembly, Test				25	0.50	154	77	100	1.00	95	95		
03.1.1.3.3.1.2	Final Design, Drwg/Spec Mods	0.66	116	77	10									
03.1.1.3.3.2	Global Sector/Region Monitor	0.66	116	77	40	0.50	154	77	100	1.00	95	95	0	0
03.1.1.3.3.2.1	Off-Site Assembly, Test				25	0.50	154	77	100	1.00	95	95		
03.1.1.3.3.2.2	Final Design, Drwg/Spec Mods	0.66	116	77	15									
03.1.1.4	Gas Systems - PDT	15.90	79	1257	334	7.16	80	570	2080	10.00	54	540	0	160
03.2.1.4	Gas Systems - LSDT	15.90	79	1257	334	7.16	80	570	2080	10.00	54	540	0	160
03.1.1.4.1	Pressurized Drift Tubes	7.95	79	629	167	3.58	80	285	1040	5.00	54	270	0	80
03.1.1.4.1.1	Off-Site	2.30	130	299	52	0.46	180	83	0	0.00	0	0	0	0
03.1.1.4.1.1.1	Design and Development	2.30	130	299	52	0.46	180	83	0	0.00		0		
03.1.1.4.1.2	On-Site	5.65	58	330	115	3.12	65	202	1040	5.00	54	270	0	80
03.1.1.4.1.2.1	Design and drawings	4.03	58	234	68	0.81	73	59	0	0.00		0		
03.1.1.4.1.2.2	Test Procedure development	0.46	57	26	8	0.12	73	9	0	0.00		0		
03.1.1.4.1.2.3	Safety Procedure development	0.58	60	35	10	0.12	73	9	0	0.00		0		
03.1.1.4.1.2.4	Maintenance Procedure development	0.58	60	35	10	0.12	73	9	0	0.00		0		
03.1.1.4.1.2.5	Assembly and Test	0.00		0	9	0.92	54	50	0	5.00	54	270		20
03.1.1.4.1.2.6	Procurement - Surface System	0.00		0	4	0.40	66	26	415	0.00		0		30
03.1.1.4.1.2.7	Procurement - Hall System	0.00		0	6	0.63	65	41	625	0.00		0		30
03.2.1.4.1	Limited Streamer Drift Tubes	7.95	79	629	167	3.58	80	285	1040	5.00	54	270	0	80
03.2.1.4.1.1	Off-Site	2.30	130	299	52	0.46	180	83	0	0.00	0	0	0	0
03.2.1.4.1.1.1	Design and Development	2.30	130	299	52	0.46	180	83	0	0.00	0	0		
03.2.1.4.1.2	On-Site	5.65	235	330	115	3.12	65	202	1040	5.00	54	270	0	80
03.2.1.4.1.2.1	Design and drawings	4.03	58	234	68	0.81	73	59	0	0.00	0	0		
03.2.1.4.1.2.2	Test Procedure development	0.46	57	26	8	0.12	73	9	0	0.00	0	0		
03.2.1.4.1.2.3	Safety Procedure development	0.58	60	35	10	0.12	73	9	0	0.00	0	0		
03.2.1.4.1.2.4	Maintenance Procedure development	0.58	60	35	10	0.12	73	9	0	0.00	0	0		
03.2.1.4.1.2.5	Assembly and Test	0.00		0	9	0.92	54	50	0	5.00	54	270		20
03.2.1.4.1.2.6	Procurement - Surface System	0.00		0	4	0.40	66	26	415	0.00		0		30
03.2.1.4.1.2.7	Procurement - Hall System	0.00		0	6	0.63	65	41	625	0.00		0		30
03.1.1.4.2	Resistive Plate Counters	7.95	79	629	167	3.58	80	285	1040	5.00	54	270	0	80
03.1.1.4.2.1	Off-Site	2.30	130	299	52	0.46	180	83	0	0.00	0	0	0	0
03.1.1.4.2.1.1	Design and Development	2.30	130	299	52	0.46	180	83	0	0.00	0	0		
03.1.1.4.2.2	On-Site	5.65	58	330	115	3.12	65	202	1040	5.00	54	270	0	80
03.1.1.4.2.2.1	Design and drawings	4.03	58	234	68	0.81	73	59	0	0.00	0	0		
03.1.1.4.2.2.2	Test Procedure development	0.46	57	26	8	0.12	73	9	0	0.00	0	0		
03.1.1.4.2.2.3	Safety Procedure development	0.58	60	35	10	0.12	73	9	0	0.00	0	0		
03.1.1.4.2.2.4	Maintenance Procedure development	0.58	60	35	10	0.12	73	9	0	0.00	0	0		
03.1.1.4.2.2.5	Assembly and Test	0.00		0	9	0.92	54	50	0	5.00	54	270		20

		Engineering/Design			M&S	Inspection/Admin			Proc/Fab	Assembly				
		Labor	Rate	Total		Labor	Rate	Total	Material	Labor	Rate	Subtotal	Captl. Eqpt.	Tooling
WBS no.	Item	my	k$/my	k$	k$	my	k$/my	k$	k$	my	k$/my	k$	k$	k$
03.1.1.4.2.2.6	Procurement - Surface System	0.00		0	4	0.40	66	26	415	0.00		0		30
03.1.1.4.2.2.7	Procurement - Hall System	0.00		0	6	0.63	65	41	625	0.00		0		30
03.1.1.5	Cooling Systems - PDT	4.00	116	464	70	1.25	126	156	400	6.00	95	570	0	0
03.2.1.5	Cooling Systems - LSDT	4.00	116	464	70	1.25	125	156	400	6.00	95	570	0	0
03.1.1.5.1	Pressurized Drift Tubes	2.00	116	232	35	0.63	125	78	200	3.00	95	285	0	0
03.1.1.5.1.1	Off-Site	2.00		232	35	0.63		78	200	3.00		285	0	0
03.1.1.5.1.1.1	Shipping				5	0.13	125	16		0.25	95	24		
03.1.1.5.1.1.2	Subassembly, Test				5	0.13	125	16		1.00	95	95		
03.1.1.5.1.1.3	Machining, Inspection				5	0.13	125	16		1.00	95	95		
03.1.1.5.1.1.4	Procurement				5	0.13	125	16	200	0.75	95	71		
03.1.1.5.1.1.5	Final Design, Drwg/Spec Mods	2.00	116	232	15	0.13	125	16						
03.2.1.5.1	Limited Streamer Drift Tubes	2.00	116	232	35	0.63	125	78	200	3.00	95	285	0	0
03.2.1.5.1.1	Off-Site	2.00		232	35	0.63		78	200	3.00		285	0	0
03.2.1.5.1.1.1	Shipping				5	0.13	125	16		0.25	95	24		
03.2.1.5.1.1.2	Subassembly, Test				5	0.13	125	16		1.00	95	95		
03.2.1.5.1.1.3	Machining, Inspection				5	0.13	125	16		1.00	95	95		
03.2.1.5.1.1.4	Procurement				5	0.13	125	16	200	0.75	95	71		
03.2.1.5.1.1.5	Final Design, Drwg/Spec Mods	2.00	116	232	15	0.13	125	16						
03.1.1.5.2	Resistive Plate Counters	2.00	116	232	35	0.63	125	78	200	3.00	95	285	0	0
03.1.1.5.2.1	Off-Site	2.00		232	35	0.63	154	78	200	3.00	95	285	0	0
03.1.1.5.2.1.1	Shipping				5	0.13	125	16		0.25	95	24		
03.1.1.5.2.1.2	Subassembly, Test				5	0.13	125	16		1.00	95	95		
03.1.1.5.2.1.3	Machining, Inspection				5	0.13	125	16		1.00	95	95		
03.1.1.5.2.1.4	Procurement				5	0.13	125	16	200	0.75	95	71		
03.1.1.5.2.1.5	Final Design, Drwg/Spec Mods	2.00	116	232	15	0.13	125	16						
03.1.2	End Cap Region	25.50	98	2500	584	33.29	99	3289	7166	81.43	59	4797	805	470
03.1.2.1	End Cap Region Installation	3.00	99	297	36	2.87	63	182	311					
03.1.2.1.1	On-Site	0.00		0	8	1.24		86	161					
03.1.2.1.1.1	Test				2	0.33	69	23	37					
03.1.2.1.1.2	Mechanical Assembly				2	0.33	69	23	37					
03.1.2.1.1.3	Electrical/Electronics Assembly				2	0.33	69	23	37					
03.1.2.1.1.4	Fac Prep				2	0.25	69	17	50					
03.1.2.1.2	Off-Site	3.00		297	28	1.63		96	150					
03.1.2.1.2.1	Install. Tool Final Dsgn, Mach, Assy	3.00	99	297	28	1.63	59	96	150					

MUON SUBSYSTEM COST MATRIX Rev 11 6/16/92

		Engineering/Design			M&S	Inspection/Admin			Proc/Fab	Assembly				
		Labor	Rate	Total		Labor	Rate	Total	Material	Labor	Rate	Subtotal	Captl. Eqpt.	Tooling
WBS no.	Item	my	k$/my	k$	k$	my	k$/my	k$	k$	my	k$/my	k$	k$	k$
03.1.2.2	End Cap Region Sector Assy	12.57	107	1341	332	22.58	100	2260	4734	70.93	56	3989	780	365
03.1.2.2.1	On-Site	0.00		0	9	1.44		99	175	10.33	16	160	375	200
03.1.2.2.1.1	Sector Storage					0.00		0	0			0		
03.1.2.2.1.2	Test				3	0.56	69	39	25	1.25	52	53	100	
03.1.2.2.1.3	Assembly				4	0.63	69	43	100	8.33	46	54	275	200
03.1.2.2.1.4	Facility Prep				2	0.25	69	17	50	0.75	52	53		
03.1.2.2.2	Off-Site	3.00		297	23	0.88		55	10	2.13	69	147	0	75
03.1.2.2.2.1	Assy Fixt Fnl Dsgn, Mach, Assy	3.00	99	297	23	0.88	63	55	10	2.13	69	147		75
03.1.2.2.3	Cathode Strip Chambers	3.25	102	332	86	9.49	91	864	3353	49.87	62	3116	42	0
03.1.2.2.3.1	Off-Site	3.25		332	86	9.49		864	3353	49.87		3116	42	0
03.1.2.2.3.1.1	Shipping				2	0.23	69	16	50	0.46	107	49		
03.1.2.2.3.1.2	Test				3	0.50	133	67	0	5.66	110	623	28	
03.1.2.2.3.1.3	Assembly				14	2.25	133	299	24	20.00	47	940	14	
03.1.2.2.3.1.4	Facility Prep				5	0.75	133	100	0	3.75	97	364		
03.1.2.2.3.1.5	Machining, Inspection				42	5.63	68	383	3279	20.00	57	1140		
03.1.2.2.3.1.6	Final Design, Drwg/Spec Mods	3.25	102	332	20	0.13	133							
03.1.2.2.4	Sector Support Structures	5.00	111	555	140	7.02	109	768	84	6.60	57	376	363	90
03.1.2.2.4.1	Off-Site	5.00		555	140	7.02		768	84	6.60		376	363	90
03.1.2.2.4.1.1	Shipping				25	1.00	125	125	0	0.00	0	0		
03.1.2.2.4.1.2	Test				15	1.00	125	125				0		
03.1.2.2.4.1.3	Assembly				15	1.00	125	125	0			0		
03.1.2.2.4.1.4	Facility Prep				10	0.50	125	63				0		
03.1.2.2.4.1.5	Machining, Inspection				36	2.77	81	224	84	6.60	57	376	363	90
03.1.2.2.4.1.6	Final Design, Drwg/Spec Mods	5.00	111	555	39	0.75	142	106.5				0		
03.1.2.2.5	Alignment & Calibration Sys	1.32	119	157	74	3.75	126	473	1112	2.00	95	190	0	0
03.1.2.2.5.1	Local Chamber Alignment	0.66		79	37	1.88		236	556	1.00		95	0	0
03.1.2.2.5.1.1	Off-Site	0.66		79	37	1.88		236	556	1.00		95	0	0
03.1.2.2.5.1.1.1	Shipping				25	1.00	125	125		0.00	0	0		
03.1.2.2.5.1.1.2	Test				2	0.13	125	16		0.25	95	24		
03.1.2.2.5.1.1.3	Assembly				2	0.13	125	16		0.25	95	24		
03.1.2.2.5.1.1.4	Facility Prep				2	0.13	125	16	25	0.25	95	24		
03.1.2.2.5.1.1.5	Machining, Inspection				2	0.25	129	32	531	0.25	95	24		
03.1.2.2.5.1.1.6	Final Design, Drwg/Spec Mods	0.66	119	79	4	0.25	129	32						
03.1.2.2.5.2	Global Sector/Region Monitor	0.66	119	79	37	1.88	126	236	556	1.00	0	95	0	0
03.1.2.2.5.2.1	Off-Site	0.66		79	37	1.88		236	556	1.00		95	0	0
03.1.2.2.5.2.1.1	Shipping				25	1.00	125	125		0.00	0	0		
03.1.2.2.5.2.1.2	Test				2	0.13	125	16		0.25	95	24		

		Engineering/Design			M&S	Inspection/Admin			Proc/Fab	Assembly				
		Labor	Rate	Total		Labor	Rate	Total	Material	Labor	Rate	Subtotal	Capit. Eqpt.	Tooling
WBS no.	Item	my	k$/my	k$	k$	my	k$/my	k$	k$	my	k$/my	k$	k$	k$
03.1.2.2.5.2.1.3	Assembly				2	0.13	125	16		0.25	95	24		
03.1.2.2.5.2.1.4	Facility Prep				2	0.13	125	16	25	0.25	95	24		
03.1.2.2.5.2.1.5	Machining, Inspection				2	0.25	129	32	531	0.25	95	24		
03.1.2.2.5.2.1.6	Final Design, Drwg/Spec Mods	0.66	119	79	4	0.25	129	32						
03.1.2.3	Electronics/Electronics Hardware	1.32	118	155	17	1.00	142	142	631	1.25	95	119	0	0
03.1.2.3.1	Cathode Strip Chambers	0.00		0	0	0.00	0	0	0	0.00		0	0	0
03.1.2.3.1.1	Off-Site	15.46		2381	1535	0.00	0	0	7491	0.00		0	0	0
03.1.2.3.1.1.1	Sense Electronics Design, Fab, Ship	7.00	154	1078	700				5082					
03.1.2.3.1.1.2	Triggering Electronics Des, Fab, Ship	5.50	154	847	440				1637					
03.1.2.3.1.1.3	Beam Crossing Electronics Des, Fab, Sh	2.30	154	354	390				347					
03.1.2.3.1.1.4	Calibration Electronics Des, Fab, Ship	0.66	154	102	5				100					
03.1.2.3.1.1.5	High-Voltage Systems Des, Fab, Ship	0.00	154	0	0				325					
03.1.2.3.2	Align and Cal System Elec	1.32	118	155	17	1.00	142	142	631	1.25	95	119	0	0
03.1.2.3.2.1	Local Chamber Alignment	0.66		77	6	0.25		32	531	0.25		24	0	0
03.1.2.3.2.1.1	Off-Site Assembly/Test				2	0.25	129	32	531	0.25	95	24	0	0
03.1.2.3.2.1.2	Final Design, Drwg/Spec Mods	0.66	116	77	4									
03.1.2.3.2.2	Global Sector/Region Monitor	0.66	119	79	11	0.75	146	109	100	1.00	95	95	0	0
03.1.2.3.2.2.1	Off-Site Assembly/Test				7	0.50	154	77	100	1.00	95	95		
03.1.2.3.2.2.2	Final Design, Drwg/Spec Mods	0.66	119	79	4	0.25	129	32						
03.1.2.4	Gas System	7.95	79	629	167	3.58	80	285	1040	5.00	54	270	0	80
03.1.2.4.1	Cathode Strip Chambers	7.95	79	629	167	3.58	80	285	1040	5.00	54	270	0	80
03.1.2.4.1.1	Off-Site	2.30	130	299	52	0.46	180	83	0	0.00	0	0	0	0
03.1.2.4.1.1.1	Design and Development	2.30	130	299	52	0.46	180	83	0	0.00	0	0		
03.1.2.4.1.2	On-Site	5.65	58	330	115	3.12	65	202	1040	5.00	54	270	0	80
03.1.2.4.1.2.1	Design and drawings	4.03	58	234	68	0.81	73	59	0	0.00	0	0		
03.1.2.4.1.2.2	Test Procedure development	0.46	57	26	8	0.12	73	9	0	0.00	0	0		
03.1.2.4.1.2.3	Safety Procedure development	0.58	60	35	10	0.12	73	9	0	0.00	0	0		
03.1.2.4.1.2.4	Maintenance Procedure development	0.58	60	35	10	0.12	73	9	0	0.00	0	0		
03.1.2.4.1.2.5	Assembly and Test	0.00		0	9	0.92	54	50	0	5.00	54	270		20
03.1.2.4.1.2.6	Procurement - Surface System	0.00		0	4	0.40	66	26	415	0.00		0		30
03.1.2.4.1.2.7	Procurement - Hall System	0.00		0	6	0.63	65	41	625	0.00		0		30
03.1.2.5	Cooling System	0.66	119	79	32	3.26	129	420	450	4.25	99	420	25	25
03.1.2.5.1	Cathode Strip Chambers	0.66	119	79	32	3.26	129	420	450	4.25	99	420	25	25
03.1.2.5.1.1	Off-Site	0.66		79	32	3.26		420	450	4.25		420	25	25
03.1.2.5.1.1.1	Shipping				7	0.13	125	16	0	0.00	95	0		
03.1.2.5.1.1.2	Subassembly, Test				11	1.50	133	200	100	1.75	104	182	25	25

MUON SUBSYSTEM COST MATRIX Rev 11 6/16/92

		Engineering/Design			M&S	Inspection/Admin			Proc/Fab	Assembly				
		Labor	Rate	Total		Labor	Rate	Total	Material	Labor	Rate	Subtotal	Captl. Eqpt.	Tooling
WBS no.	Item	my	k$/my	k$	k$	my	k$/my	k$	k$	my	k$/my	k$	k$	k$
03.1.2.5.1.1.3	Machining, Inspection				5	1.50	126	189	150	1.75	95	166		
03.1.2.5.1.1.4	Procurement				5	0.13	125	16	200	0.75	95	71		
03.1.2.5.1.1.5	Final Design, Drwg/Spec Mods	0.66	119	79	4	0.00		0				0		
03.1.3	Subsystem Project Mgmt.				435	21.40	154	3296						
03.1.3.1	Administration/Oversight				150	9.50	154	1463						
03.1.3.2	Resource Management				45	1.19	154	183						
03.1.3.3	ES&H Assurance				90	2.38	154	367						
03.1.3.4	Quality Assurance Program				90	3.57	154	550						
03.1.3.5	Systems Integration				30	2.38	154	367						
03.1.3.6	Subsystem Cost/Schedule Monitor				30	2.38	154	367						
13	Muon Subsystem R&D	11.63	154	1791	754									
13.1	CSC Subgroup	2.64	154	407	220									
13.2	LSDT Subgroup	3.13	154	482	144									
13.3	PDT Subgroup	1.94	154	299	203									
13.4	RPC Subgroup	1.48	154	228	148									
13.5	TTR Subgroup	2.00	154	308	6									
13.6	SCARF Subgroup	0.44	154	68	33									
23	ENG Sbgrp Concept Des, TP Prep	12.00	116	1392	300									

		Installation							Totals								
Material	Total	Labor	Rate	Subtotal	Captl. Eqpt.	Tooling	Material	Total	Labor	Material	Captl. Eqpt.	Tooling	Subtotal	Contingency		Total	Last modified
k$	k$	my	k$/my	k$	k$	k$	k$	k$	k$	k$	k$	k$	k$	Rate	Amount, k$	k$	
1470	21862	41.2	53	2168	2185	1625	248	6226	39617	25964	4576	2801	72958	28.2%	20590	93549	16-Jun-92
1510	21163	41.2	53	2168	2185	1625	248	6226	38844	21794	4526	2851	68015	28.1%	19086	87101	16-Jun-92
• specifically LSDT (03.2).																	
1470	21862	41.15	53	2168	2185	1625	248	6226	36434	24910	4576	2801	68721	29%	19743	88464	3-Jun-92
1510	21163	41.15	53	2168	2185	1625	248	6226	35661	20740	4526	2851	63778	29%	18238	82016	5-Jun-92
908	15228	23.41	54	1263	1185	1125	176	3749	21648	16091	2771	1831	42341	29%	12368	54709	3-Jun-92
948	14528	23.41	54	1263	1185	1125	176	3749	20875	11921	2721	1881	37398	29%	10864	48261	5-Jun-92
		23.41	54	1263	1185	1125	176	3749	2375	811	1185	1125	5496	24%	1322	6818	3-May-92
		13.67		747	1185	1125	89	3146	842	357	1185	1125	3509	22%	786	4295	
		3.00	71	213	60	0	76	349	213	86	60	0	359	17%	61	420	2-May-92
		3.17	50	159	1000	1000	4	2163	193	82	1000	1000	2275	23%	523	2798	2-May-92
		1.00	57	57	125	125	1	308	83	78	125	125	411	23%	95	506	2-May-92
		6.50	49	319			8	327	353	111	0	0	464	23%	107	571	6-Jan-92
		9.74		516	0	0	87	603	1533	454	0	0	1987	27%	536	2523	
		9.74	53	516			87	603	1533	454	0	0	1987	27%	536	2523	16-Jun-92
720	13580								15218	11933	1586	546	29283	29%	8550	37833	3-Jun-92
760	12880								14445	7763	1536	596	24340	29%	7046	31385	5-Jun-92
66	1243								702	250	375	200	1527	23%	347	1874	
50	50								0	50	0	0	50	15%	8	58	13-Jan-92
2	167								104	30	100	0	234	23%	54	287	2-May-92
13	986								542	117	275	200	1134	23%	261	1394	2-May-92
1	40								56	53	0	0	109	23%	25	134	10-Jan-92
3	28								377	111	0	0	488	27%	132	620	
3	28								377	111	0	0	488	27%	132	620	16-Jun-92
286	7237								7831	8450	300	55	16636	30%	4949	21585	
286	7237								7831	8450	300	55	16636	30%	4949	21585	
101	150								65	153	0	0	218	30%	65	284	16-Jun-92
7	630								689	38	0	0	727	30%	218	945	16-Jun-92

		Installation							Totals								
Material	Total	Labor	Rate	Subtotal	Captl. Eqpt.	Tooling	Material	Total	Labor	Material	Captl. Eqpt.	Tooling	Subtotal	Contingency		Total	Last modified
k$	k$	my	k$/my	k$	k$	k$	k$	k$	k$	k$	k$	k$	k$	Rate	Amount, k$	k$	
24	2339								2259	88	300	55	2702	30%	811	3513	16-Jun-92
125	489								464	130	0	0	594	23%	137	730	22-Jan-92
29	3629								4005	8021	0	0	12026	30%	3608	15634	16-Jun-92
	0								349	20	0	0	369	30%	111	479	16-Jun-92
332	6603								7129	4081	250	105	11565	30%	3428	14993	
332	6603								7129	4081	250	105	11565	30%	3428	14993	
101	150								65	153	0	0	218	30%	65	284	16-Jun-92
7	630								689	38	0	0	727	30%	218	945	16-Jun-92
24	2339								2259	88	250	105	2702	30%	811	3513	16-Jun-92
125	489								464	130	0	0	594	23%	137	730	22-Jan-92
75	2995								3303	3652	0	0	6955	30%	2086	9041	16-Jun-92
									349	20	0	0	369	30%	111	479	16-Jun-92
146	3046								3820	1726	200	146	5892	29%	1734	7626	
146	3046								3820	1726	200	146	5892	29%	1734	7626	
101	150								80	153	0	0	233	30%	70	303	16-Jun-92
7	657								666	10	50	0	726	30%	218	944	16-Jun-92
10	730								769	74	150	100	1093	30%	328	1421	16-Jun-92
5	369								464	10	0	0	474	23%	109	582	24-Jan-92
23	1141								1493	1459	0	46	2998	30%	899	3897	16-Jun-92
									349	20	0	0	369	30%	111	479	16-Jun-92
169	1762								1714	550	711	145	3120	33%	1043	4163	
169	1762								1714	550	711	145	3120	33%	1043	4163	
101	123								39	123	0	0	162	23%	37	200	12-Jan-92
68	1639								1013	388	711	145	2257	34%	767	3025	16-Jun-92
0	0								662	39	0	0	701	34%	238	939	16-Jun-92
163	1697								1643	509	711	145	3008	33%	1005	4013	
163	1697								1643	509	711	145	3008	33%	1005	4013	
101	123								39	123	0	0	162	23%	37	200	12-Jan-92
62	1574								942	347	711	145	2145	34%	729	2874	16-Jun-92
0	0								662	39	0	0	701	34%	238	939	16-Jun-92
50	264								774	846	0	0	1620	21%	345	1965	
25	120								376	611	0	0	987	22%	213	1200	
25	120								376	611	0	0	987	22%	213	1200	
25	25								125	50	0	0	175	15%	26	201	31-Jan-92
	24								39	5	0	0	44	23%	10	55	31-Jan-92
	24								39	5	0	0	44	23%	10	55	31-Jan-92
	24								39	30	0	0	69	23%	16	85	31-Jan-92
	24								56	511	0	0	567	23%	130	697	3-May-92
	0								77	10	0	0	87	23%	20	106	31-Jan-92

		Installation							Totals								
Material	Total	Labor	Rate	Subtotal	Captl. Eqpt.	Tooling	Material	Total	Labor	Material	Captl. Eqpt.	Tooling	Subtotal	Contingency		Total	Last modified
k$	k$	my	k$/my	k$	k$	k$	k$	k$	k$	k$	k$	k$	k$	Rate	Amount, k$	k$	
50	264								774	1086	0	0	1860	0	400	2260	
25	120								376	851	0	0	1227	22%	268	1495	
25	120								376	851	0	0	1227	22%	268	1495	
25	25								125	50	0	0	175	15%	26	201	31-Jan-92
	24								39	5	0	0	44	23%	10	55	31-Jan-92
	24								39	5	0	0	44	23%	10	55	31-Jan-92
	24								39	30	0	0	69	23%	16	85	31-Jan-92
0	24								56	751	0	0	807	23%	186	993	3-May-92
	0								77	10	0	0	87	23%	20	106	31-Jan-92
25	144								398	235	0	0	633	21%	132	765	
25	144								398	235	0	0	633	21%	132	765	
25	25								125	50	0	0	175	15%	26	201	31-Jan-92
	24								39	5	0	0	44	23%	10	55	31-Jan-92
	24								39	5	0	0	44	23%	10	55	31-Jan-92
	24								39	30	0	0	69	23%	16	85	31-Jan-92
	48								79	135	0	0	214	23%	49	263	16-Jun-92
	0								77	10	0	0	87	23%	20	106	31-Jan-92
0	190								497	275	0	0	772	23%	178	950	21-Apr-92
0	190								497	275	0	0	772	23%	178	950	21-Apr-92
0	0								0	0	0	0	0		0	0	
0	0								1239	7696	0	0	8935	40%	3574	12509	
									1009	6703	0	0	7712	40%	3085	10796	21-Apr-92
									154	265	0	0	419	40%	167	586	21-Apr-92
									77	728	0	0	805	40%	322	1127	21-Apr-92
0	0								0	0	0	0	0		0	0	
0	0								1239	6633	0	0	7872	40%	3149	11021	
									1009	5703	0	0	6712	40%	2685	9396	21-Apr-92
									154	265	0	0	419	40%	167	586	21-Apr-92
									77	665	0	0	742	40%	297	1039	21-Apr-92
									0	0	0	0	0		0	0	
									970	2552	0	0	3522	40%	1409	4930	
									739	2161	0	0	2900	40%	1160	4060	21-Apr-92
									154	275	0	0	429	40%	171	600	21-Apr-92
									77	116	0	0	193	40%	77	270	21-Apr-92
0	190								497	275	0	0	772	23%	178	950	
0	95								249	135	0	0	384	23%	88	472	31-Jan-92

MUON SUBSYSTEM COST MATRIX Rev 11 6/16/92

		Installation							Totals								
Material	Total	Labor	Rate	Subtotal	Captl. Eqpt.	Tooling	Material	Total	Labor	Material	Captl. Eqpt.	Tooling	Subtotal	Contingency		Total	Last modified
k$	k$	my	k$/my	k$	k$	k$	k$	k$	k$	k$	k$	k$	k$	Rate	Amount, k$	k$	
0	95								172	125	0	0	297	23%	68	365	16-Jun-92
									77	10	0	0	87	23%	20	106	31-Jan-92
0	95								249	140	0	0	389	23%	89	478	
0	95								172	125	0	0	297	23%	68	365	16-Jun-92
									77	15	0	0	92	23%	21	113	31-Jan-92
98	798								2368	2512	0	160	5040	32%	1618	6658	3-Jun-92
98	798								2368	2512	0	160	5040	32%	1618	6658	3-Jun-92
49	399	0	0	0			0	0	1184	1256	0	80	2520	32%	809	3329	3-Jun-92
0	0	0	0	0			0	0	382	52	0	0	434	28%	121	555	
0	0	0		0			0	0	382	52	0	0	434	28%	121	555	28-May-92
49	399	0	0	0			0	0	802	1204	0	80	2086	33%	688	2774	
0	0	0		0			0	0	293	68	0	0	361	28%	101	462	28-May-92
0	0	0		0			0	0	35	8	0	0	43	34%	15	58	16-Jun-92
0	0	0		0			0	0	44	10	0	0	54	34%	18	72	16-Jun-92
0	0	0		0			0	0	44	10	0	0	54	34%	18	72	16-Jun-92
49	339	0		0			0	0	320	58	0	20	398	34%	135	533	16-Jun-92
0	30	0		0			0	0	26	419	0	30	475	34%	162	637	28-May-92
	30	0		0			0	0	41	631	0	30	702	34%	239	941	28-May-92
49	399	0	0	0			0	0	1184	1256	0	80	2520	32%	809	3329	3-Jun-92
0	0	0	0	0			0	0	382	52	0	0	434	28%	121	555	
0	0	0	0	0			0	0	382	52	0	0	434	28%	121	555	28-May-92
49	399	0	0	0			0	0	802	1204	0	80	2086	33%	688	2774	
0	0	0	0	0			0	0	293	68	0	0	361	28%	101	462	28-May-92
0	0	0	0	0			0	0	35	8	0	0	43	34%	15	58	16-Jun-92
0	0	0	0	0			0	0	44	10	0	0	54	34%	18	72	16-Jun-92
0	0	0	0	0			0	0	44	10	0	0	54	34%	18	72	16-Jun-92
49	339	0	0	0			0	0	320	58	0	20	398	34%	135	533	16-Jun-92
0	30	0		0			0	0	26	419	0	30	475	34%	162	637	28-May-92
	30	0		0			0	0	41	631	0	30	702	34%	239	941	28-May-92
49	399	0.00		0			0	0	1184	1256	0	80	2520	32%	809	3329	3-Jun-92
0	0	0	0	0			0	0	382	52	0	0	434	28%	121	555	
0	0	0	0	0			0	0	382	52	0	0	434	28%	121	555	28-May-92
49	399	0	0	0			0	0	802	1204	0	80	2086	33%	688	2774	
0	0	0	0	0			0	0	293	68	0	0	361	28%	101	462	28-May-92
0	0	0	0	0			0	0	35	8	0	0	43	34%	15	58	16-Jun-92
0	0	0	0	0			0	0	44	10	0	0	54	34%	18	72	16-Jun-92
0	0	0	0	0			0	0	44	10	0	0	54	34%	18	72	16-Jun-92
49	339	0	0	0			0	0	320	58	0	20	398	34%	135	533	16-Jun-92

		Installation							Totals								
Material	Total	Labor	Rate	Subtotal	Capit. Eqpt.	Tooling	Material	Total	Labor	Material	Capit. Eqpt.	Tooling	Subtotal	Contingency		Total	Last modified
k$	k$	my	k$/my	k$	k$	k$	k$	k$	k$	k$	k$	k$	k$	Rate	Amount, k$	k$	
0	30	0		0			0	0	26	419	0	30	475	34%	162	637	28-May-92
	30	0		0			0	0	41	631	0	30	702	34%	239	941	28-May-92
90	660								1190	560	0	0	1750	40%	700	2450	
90	660								1190	560	0	0	1750	40%	700	2450	
45	330								595	280	0	0	875	40%	350	1225	
45	330								595	280	0	0	875	40%	350	1225	
5	29								39	10	0	0	49	40%	20	69	31-Jan-92
15	110								111	20	0	0	131	40%	52	183	31-Jan-92
15	110								111	20	0	0	131	40%	52	183	31-Jan-92
10	81								87	215	0	0	302	40%	121	423	31-Jan-92
									248	15	0	0	263	40%	105	368	31-Jan-92
45	330								595	280	0	0	875	40%	350	1225	
45	330								595	280	0	0	875	40%	350	1225	
5	29								39	10	0	0	49	40%	20	69	31-Jan-92
15	110								111	20	0	0	131	40%	52	183	31-Jan-92
15	110								111	20	0	0	131	40%	52	183	31-Jan-92
10	81								87	215	0	0	302	40%	121	423	31-Jan-92
									248	15	0	0	263	40%	105	368	31-Jan-92
45	330								595	280	0	0	875	40%	350	1225	
45	330								595	280	0	0	875	40%	350	1225	
5	29								39	10	0	0	49	40%	20	69	31-Jan-92
15	110								111	20	0	0	131	40%	52	183	31-Jan-92
15	110								111	20	0	0	131	40%	52	183	31-Jan-92
10	81								87	215	0	0	302	40%	121	423	31-Jan-92
									248	15	0	0	263	40%	105	368	31-Jan-92
562	6634	18	51	905	1000	500	72	2477	11491	8384	1805	970	22650	31%	7002	29651	26-May-92
		17.74	51	905	1000	500	72	2477	1383	419	1000	500	3302	24%	795	4097	
		12.83	51	654	1000	500	16	2170	740	185	1000	500	2425	23%	558	2983	
		6.00	51	306			7	313	329	46	0	0	375	23%	86	461	27-Jan-92
		1.58	50	79	1000	500	2	1581	102	41	1000	500	1643	23%	378	2021	2-May-92
		3.00	53	159			4	163	182	43	0	0	225	23%	52	276	27-Jan-92
		2.25	49	110			3	113	128	55	0	0	183	23%	42	224	27-Jan-92
		4.91	51	250	0	0	56	306	644	234	0	0	878	27%	237	1115	
		4.91	51	250			56	306	644	234	0	0	878	27%	237	1115	27-Jan-92

		Installation							Totals								
Material	Total	Labor	Rate	Subtotal	Captl. Eqpt.	Tooling	Material	Total	Labor	Material	Captl. Eqpt.	Tooling	Subtotal	Contingency		Total	Last modified
k$	k$	my	k$/my	k$	k$	k$	k$	k$	k$	k$	k$	k$	k$	Rate	Amount, k$	k$	
488	5622								7590	5554	780	365	14289	32%	4577	18866	
63	798								260	247	375	200	1082	23%	245	1326	
50	50								0	50	0	0	50	15%	8	58	13-Jan-92
2	155								92	30	100	0	222	23%	51	273	2-May-92
10	539								98	114	275	200	687	23%	158	845	2-May-92
1	54								70	53	0	0	123	23%	28	151	10-Jan-92
3	225								499	36	0	75	610	27%	165	775	
3	225								499	36	0	75	610	27%	165	775	16-Jun-92
281	3439								4311	3720	42	0	8073	36%	2906	10980	
281	3439								4311	3720	42	0	8073	36%	2906	10980	
101	150								65	153	0	0	218	36%	79	297	16-Jun-92
7	658								689	10	28	0	727	36%	262	989	16-Jun-92
24	978								1239	62	14	0	1315	36%	473	1789	16-Jun-92
125	489								464	130	0	0	594	36%	214	807	16-Jun-92
24	1164								1523	3345	0	0	4868	36%	1752	6620	16-Jun-92
									332	20	0	0	352	36%	127	478	16-Jun-92
111	940								1700	335	363	90	2488	31%	772	3260	
111	940								1700	335	363	90	2488	31%	772	3260	
75	75								125	100	0	0	225	15%	34	259	31-Jan-92
	0								125	15	0	0	140	23%	32	172	31-Jan-92
	0								125	15	0	0	140	23%	32	172	31-Jan-92
	0								63	10	0	0	73	34%	25	97	16-Jun-92
36	865								601	156	363	90	1210	34%	411	1621	16-Jun-92
									662	39	0	0	701	34%	238	939	16-Jun-92
30	220								820	1216	0	0	2036	24%	489	2525	
15	110								410	608	0	0	1018	24%	244	1262	
15	110								410	608	0	0	1018	24%	244	1262	
15	15								125	40	0	0	165	15%	25	190	31-Jan-92
	24								39	2	0	0	41	23%	10	51	31-Jan-92
	24								39	2	0	0	41	23%	10	51	31-Jan-92
	24								39	27	0	0	66	23%	15	82	31-Jan-92
	24								56	533	0	0	589	27%	159	748	16-Jun-92
	0								111	4	0	0	115	23%	26	141	31-Jan-92
15	110								410	608	0	0	1018	24%	244	1262	
15	110								410	608	0	0	1018	24%	244	1262	
15	15								125	40	0	0	165	15%	25	190	31-Jan-92
	24								39	2	0	0	41	23%	10	51	31-Jan-92

		Installation							Totals								
Material	Total	Labor	Rate	Subtotal	Captl. Eqpt.	Tooling	Material	Total	Labor	Material	Captl. Eqpt.	Tooling	Subtotal	Contingency		Total	Last modified
k$	k$	my	k$/my	k$	k$	k$	k$	k$	k$	k$	k$	k$	k$	Rate	Amount, k$	k$	
	24								39	2	0	0	41	23%	10	51	31-Jan-92
	24								39	27	0	0	66	23%	15	82	31-Jan-92
	24								56	533	0	0	589	27%	159	748	16-Jun-92
	0								111	4	0	0	115	23%	26	141	2-Dec-91
0	119								415	648	0	0	1063	23%	245	1308	21-Apr-92
0	0								0	0	0	0	0		0	0	
0	0								2381	9026	0	0	11407	40%	4563	15970	
									1078	5782	0	0	6860	40%	2744	9604	21-Apr-92
									847	2077	0	0	2924	40%	1170	4094	21-Apr-92
									354	737	0	0	1091	40%	436	1528	21-Apr-92
									102	105	0	0	207	40%	83	289	21-Apr-92
									0	325	0	0	325	40%	130	455	21-Apr-92
0	119								415	648	0	0	1063	23%	245	1308	
0	24								133	537	0	0	670	23%	154	824	
0	24								56	533	0	0	589	23%	135	724	31-Jan-92
									77	4	0	0	81	23%	19	99	31-Jan-92
	95								283	111	0	0	394	23%	91	484	
0	95								172	107	0	0	279	23%	64	343	16-Jun-92
									111	4	0	0	115	23%	26	141	31-Jan-92
49	399								1184	1256	0	80	2520	32%	809	3329	3-Jun-92
49	399			0			0	0	1184	1256	0	80	2520	32%	809	3329	3-Jun-92
0	0	0	0	0			0	0	382	52	0	0	434	28%	121	555	
0	0	0	0	0			0	0	382	52	0	0	434	28%	121	555	28-May-92
49	399	0	0	0			0	0	802	1204	0	80	2086	33%	688	2774	
0	0	0	0	0			0	0	293	68	0	0	361	28%	101	462	28-May-92
0	0	0	0	0			0	0	35	8	0	0	43	34%	15	58	16-Jun-92
0	0	0	0	0			0	0	44	10	0	0	54	34%	18	72	16-Jun-92
0	0	0	0	0			0	0	44	10	0	0	54	34%	18	72	16-Jun-92
49	339	0	0	0			0	0	320	58	0	20	398	34%	135	533	16-Jun-92
0	30	0		0			0	0	26	419	0	30	475	34%	162	637	28-May-92
	30	0		0			0	0	41	631	0	30	702	34%	239	941	28-May-92
25	495								918	507	25	25	1475	39%	576	2052	
25	495								918	507	25	25	1475	39%	576	2052	
25	495								918	507	25	25	1475	39%	576	2052	
0	0								16	7	0	0	23	40%	9	33	2-Dec-91
0	232								382	111	25	25	543	40%	217	760	2-Dec-91

MUON SUBSYSTEM COST MATRIX Rev 11 6/16/92

		Installation							Totals								
Material	Total	Labor	Rate	Subtotal	Captl. Eqpt.	Tooling	Material	Total	Labor	Material	Captl. Eqpt.	Tooling	Subtotal	Contingency		Total	Last modified
k$	k$	my	k$/my	k$	k$	k$	k$	k$	k$	k$	k$	k$	k$	Rate	Amount, k$	k$	
15	181								355	170	0	0	525	40%	210	735	2-Dec-91
10	81								87	215	0	0	302	40%	121	423	2-Dec-91
									79	4	0	0	83	23%	19	102	2-Dec-91
									3296	435	0	0	3731	10%	373	4104	
									1463	150	0	0	1613	10%	161	1774	27-Nov-91
									183	45	0	0	228	10%	23	251	27-Nov-91
									367	90	0	0	457	10%	46	502	27-Nov-91
									550	90	0	0	640	10%	64	704	27-Nov-91
									367	30	0	0	397	10%	40	436	27-Nov-91
									367	30	0	0	397	10%	40	436	27-Nov-91
									1791	754	0	0	2545	20%	509	3054	
									407	220	0	0	627	20%	125	752	31-Jan-92
									482	144	0	0	626	20%	125	751	31-Jan-92
									299	203	0	0	502	20%	100	602	31-Jan-92
									228	148	0	0	376	20%	75	451	31-Jan-92
									308	6	0	0	314	20%	63	377	31-Jan-92
									68	33	0	0	101	20%	20	121	31-Jan-92
									1392	300	0	0	1692	20%	338	2030	31-Jan-92

112