SSC LABORATORY LIBRARY
JUN 2 9 1992

GEM TN-92-114
MIT-GEM-EM-06

Fringe Field and Dipole-dipole Force Interactions in GEM

R. D. Pillsbury, Jr.

April 16, 1992

Abstract:

A force and possibly a torque are experienced by magnetizable material when placed in a magnetic field. Initial estimates of the magnitudes and directions of the forces arising from an interaction of such material with the fringe fields of the magnet for the GEM detector have been made and are described.

MIT-GEM-EM-06

Fringe Field and Dipole-dipole Force Interactions in GEM

16 April 1992

R.D. Pillsbury, Jr.

This document and all reports and memoranda in this series are intended as a record of work in progress. They are for use in informal discussions of design and fabrication alternatives. This material is subject to change and should not, therefore, be published or referred to in the open literature. Conclusions are preliminary and distribution should be strictly limited.

Plasma Fusion Center
Massachusetts Institute of Technology
Cambridge, MA 02139

MIT GEM Detector Memoranda
Approval Sheet

B.A. Smith — 5/18/92
B.A. Smith — Date
Project Engineer

A.M. Dawson — 14 May 92
A.M. Dawson — Date
Technical Editor

TO: B. A. Smith

FROM: R. D. Pillsbury, Jr.

DATE: April 16, 1992

SUBJECT: Fringe Field and Dipole-dipole Force Interactions in GEM

INTRODUCTION AND SUMMARY

A force and possibly a torque are experienced by magnetizable material when placed in a magnetic field. Initial estimates of the magnitudes and directions of the forces arising from an interaction of such material with the fringe fields of the magnet for the GEM detector have been made and are described below.

The body force densities experienced by small volumes of magnetizable material vary from less than 1 kN/m**3 to a maximum of 20 kN/m**3 (except for a small region in the vicinity of the flux concentrator where the forces are higher). In terms of the acceleration of gravity for iron at 7800 kg/m**3 the range is from 0.01 to 0.26 g's. For installed structural components such as rock bolts and I-beams, these forces appear to be a small portion of the total load carrying requirements.

ALGORITHMS

If the volume of material is small so that its influence on the local field is negligible, the body force density can be expressed as:

$$\vec{F} = (\vec{M} \cdot \vec{\nabla})\vec{B} \tag{1}$$

where $\vec{M}$ is the magnetization in the material (i.e., the dipole moment per unit volume) and $\vec{B}$ is a magnetic flux density. If the material magnetization vector is unable to align with the local magnetic field direction, the volume of magnetizable material will also experience a torque that tends to align the magnetization direction and the ambient field directions. This torque is given by:

$$\vec{T} = \vec{M} \times \vec{B} \tag{2}$$

If the material is saturated then the magnitude of the magnetization can be written as:

$$M = B_{sat}/\mu_0 \tag{3}$$

where B_{sat} is the saturation flux density for the material and μ_0 is the permeability of free space. Typical values of the saturation flux density for iron range from 1.2 to 2.0 T.

On the basis of these equations, the body force density experienced by a small magnetized body which can rotate in order that its magnetization direction is aligned with the ambient magnetic field can be written as:

$$\vec{F} = B_{sat}/\mu_0(\vec{B}/|\vec{B}| \cdot \vec{\nabla})\vec{B} \tag{4}$$

Estimates have been made of the magnitude and direction of the force density at various points in the experimental hall using equation (4) assuming a saturation magnitude of 1.5 T. These estimates are presented below.

FORCE ESTIMATES

A two-dimensional, axisymmetric, nonlinear, finite element code, MITMAP, was used to generate the magnetic field distribution for the baseline magnet concept. Equation (4) was used to calculate a distribution of the force densities in the hall assuming a 1.5 T saturation field level.

Figure 1 shows an elevation view of the experimental hall with the magnet and the flux concentrator shown. Also shown are the positions of the crane rail, the two assembly shafts and the two shafts at either end of hall. Flux lines are overlayed. The magnetic field vectors are parallel to these lines and the field magnitude is inversely proportional to the spacing.

Figure 2 shows the same elevation view with contours of constant flux density. As can be seen, the surface flux density is about 40 G. The flux density in the two end elevator and utility shafts is between 100 and 200 G.

Contours of constant body force density in kN/m**3 are shown overlayed on the hall in Figure 3. A small body of magnetizable material aligned with the local field line on one of these contours will experience that body force density shown. Figure 4 shows vectors of this force density. The length of the vector shank is proportional to the magnitude of the force. As can be seen, regions near the end of the coil and the end of flux concentrator experience the largest magnitude of the force and the direction is toward the coil or iron. The crane rail above the magnet end sees a body force density of approximately 8 kN/m**3 which in terms of the acceleration of gravity is approximately 0.012 g.

Figure 5 shows an end view of the magnet and hall at an axial or z-directed location that

is at the center of the magnet system. Shown is an outline of the hall, the crane rail, the tunnel and electronics shaft and the operations center at the surface. Overlayed are contours of constant flux density. The magnitude of the flux density in the electtronics shaft is between 50 and 200 G.

Figure 6 shows the same view with contours of constant body force density overlayed. In this view all forces are directed radially inward toward the axis of the magnet represented by the circle. The vertical I-beams that support the crane rails see a maximum loading of approximately 30 kN/m**3 and the load falls off as a function of vertical position to 5 kN/m**3. Rock bolts, if required, will see the same level of force densities.

Figures 7 and 8 show the flux density contours and the dipole-dipole force contours in a plane Z = 18 m which corresponds to the axial position of the end of the flux concentrator.

Additional analyses are under way to assess the distribution of loads on larger components such as the I-beams, crane rails, and crane cross-rails. These components may not have a local magnetization direction that aligns with the ambient field as is assumed in the preceeding analyses, but the loads found by integrating the values found using the method described in this memo should be conservative.

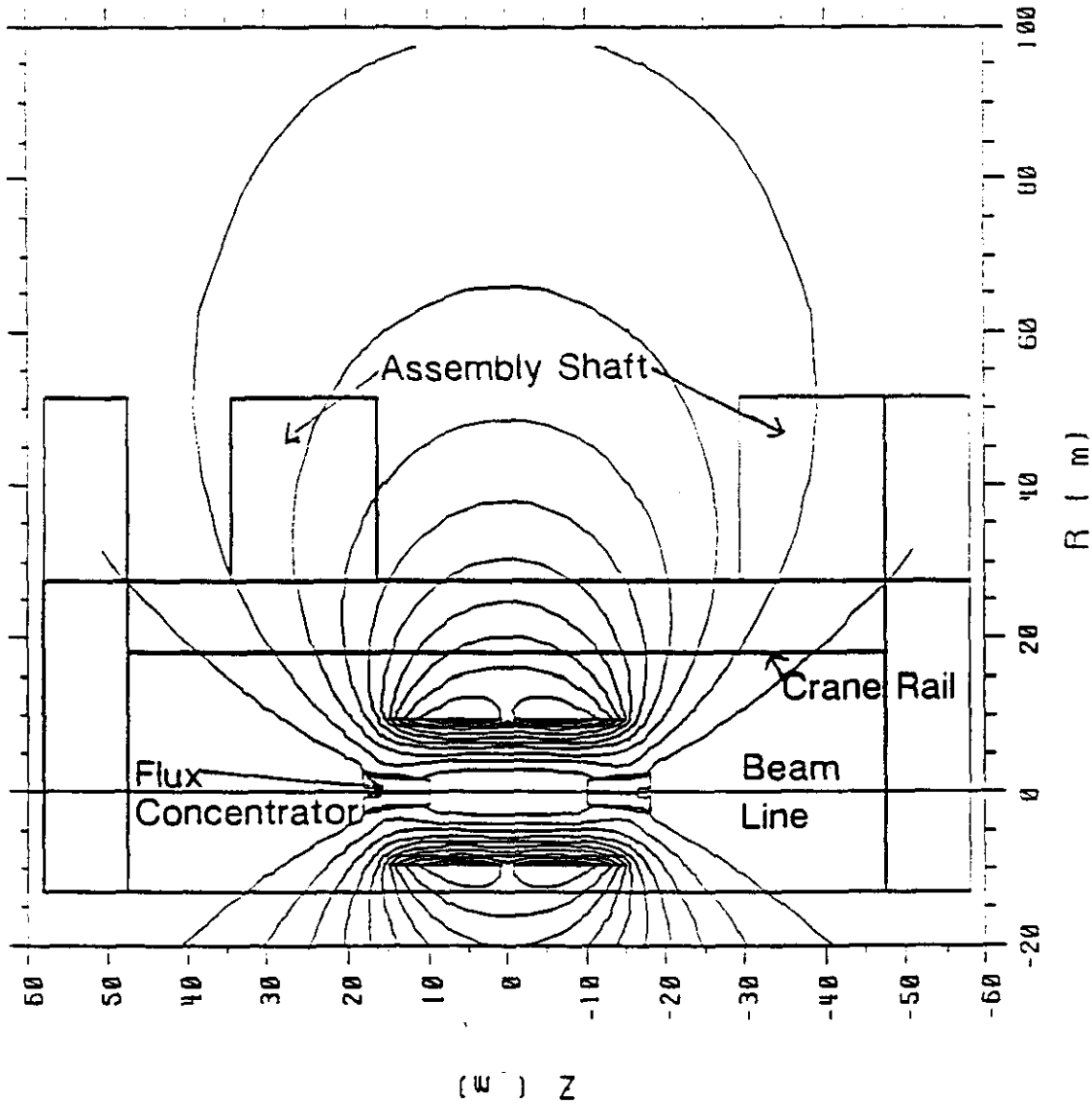

Fig. 1 – Contours of constant flux for the baseline design for GEM in the X = 0 plane overlayed on an elevation view the experimental hall and assembly and end shafts

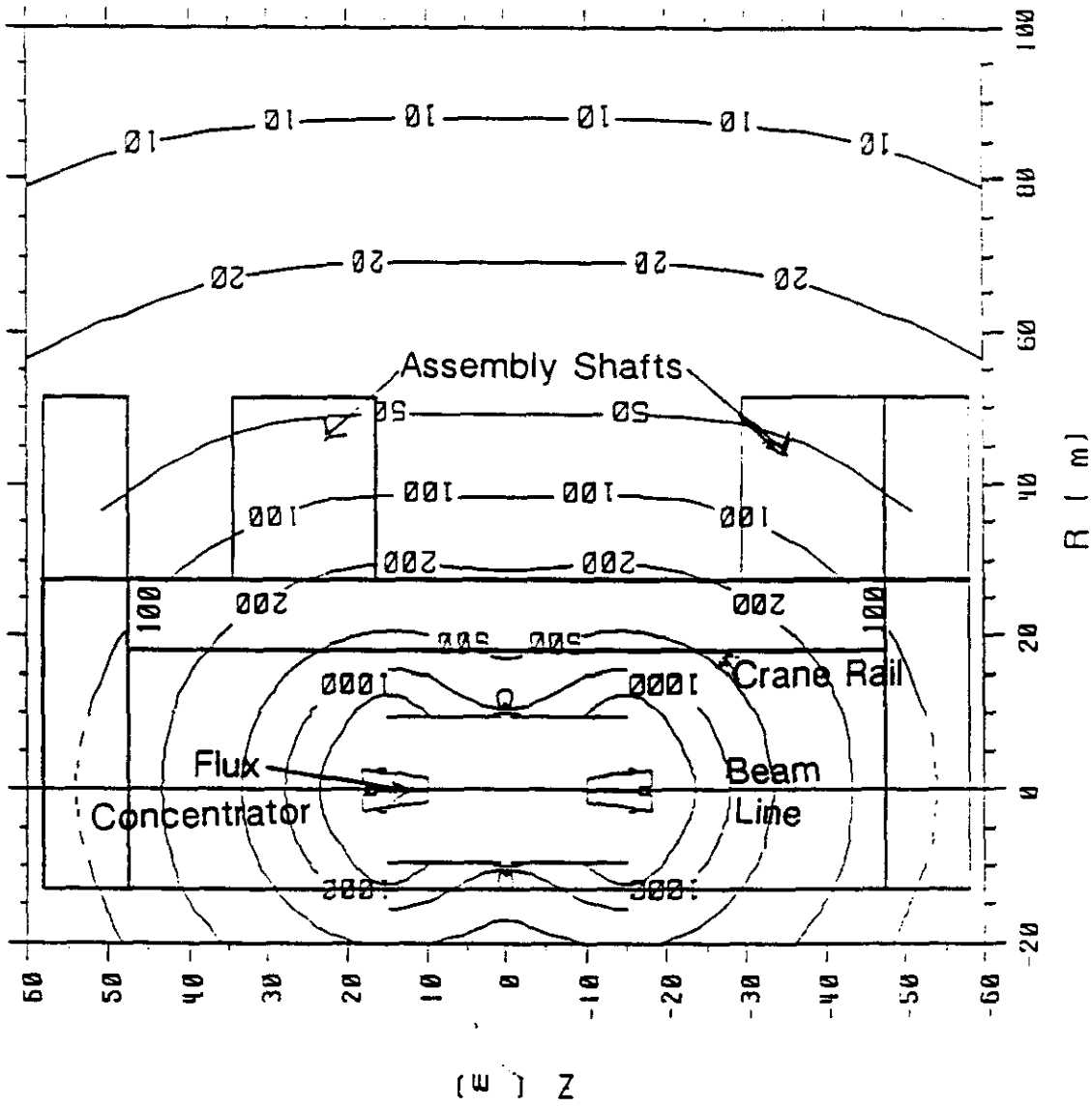

Fig. 2 – Contours of magnetic flux density in the X = 0 plane for the baseline design for GEM overlayed on an elevation view of the experimental hall and assembly and end shafts.

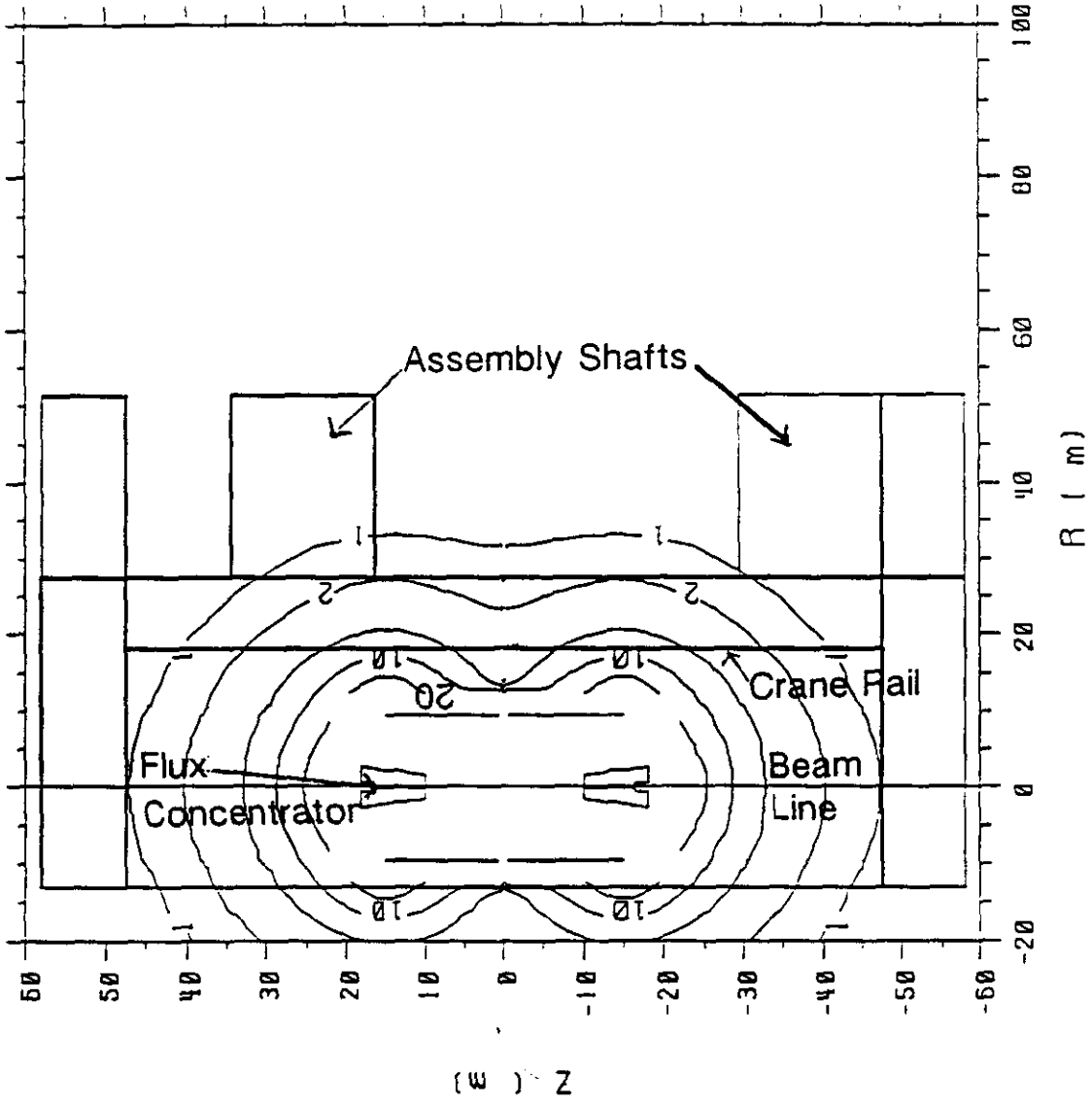

Fig. 3 – Contours of constant body force density in kN/m**3 for the baseline design for GEM. A small magnetizable body at any point along a contour will experience a body force density of the magnitude indicated. For iron at 7800 kg/m**3, 1 kN/m**3 of body force density translates to an acceleration 0.013 g's.

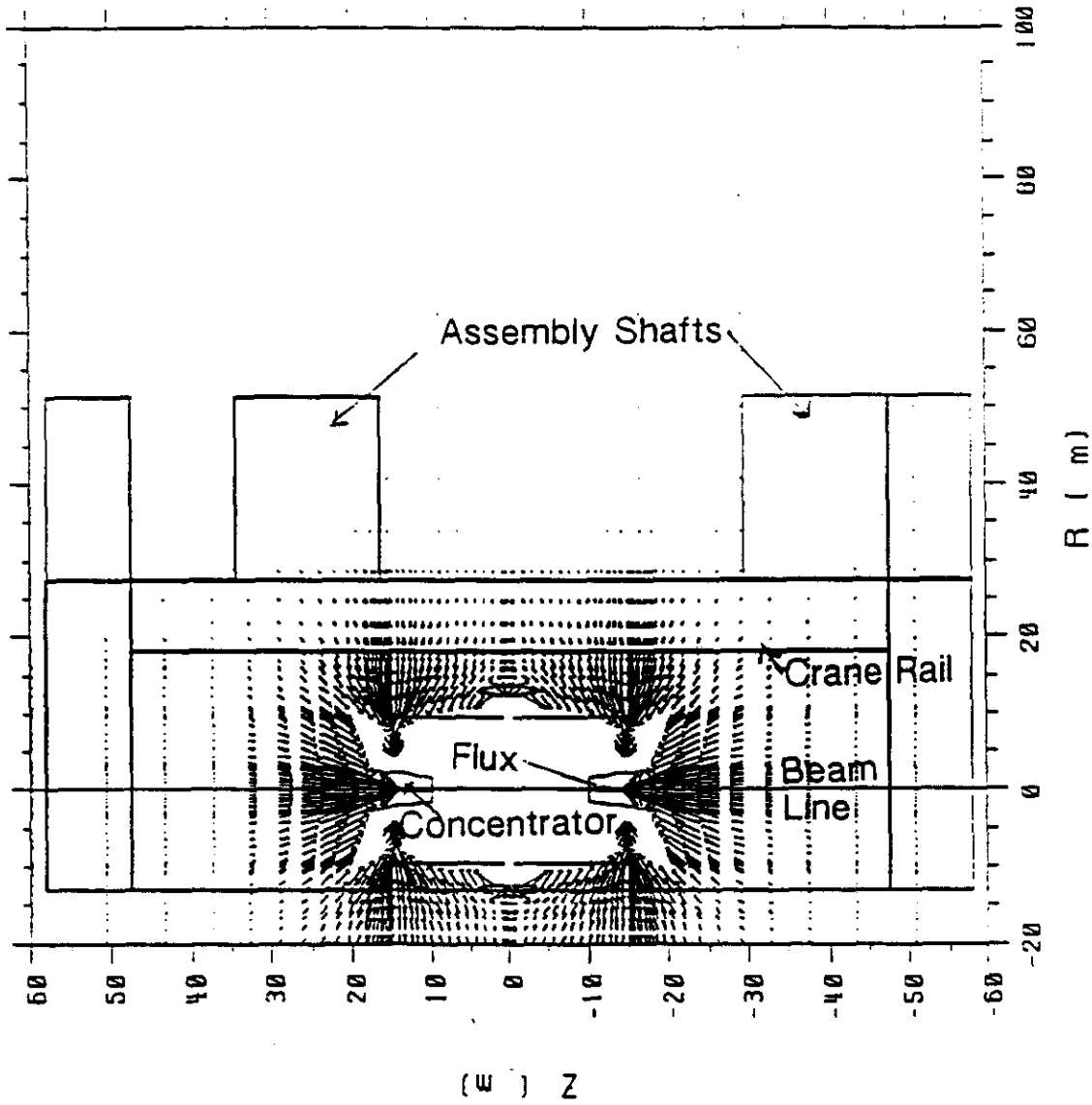

Fig. 4 – Vectors of body force density for the baseline design for GEM. The length of the vector is proportional to the force density. Forces are toward the coil or flux concentrator ends.

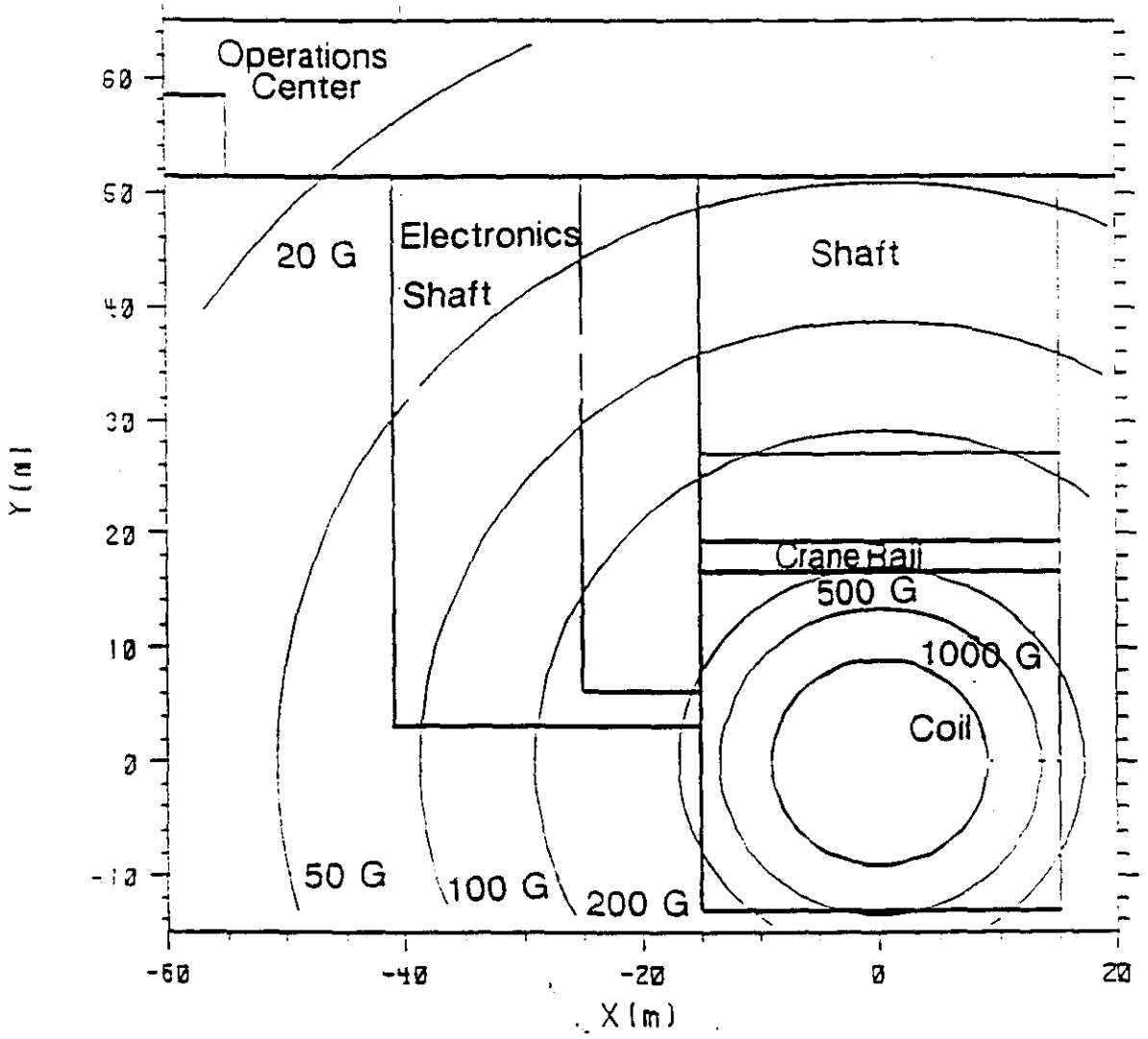

Fig. 5 – Contours of constant flux density for the baseline design for GEM in the plane of the coil center at Z = 0. Counting room flux density level is 50 to 200 G.

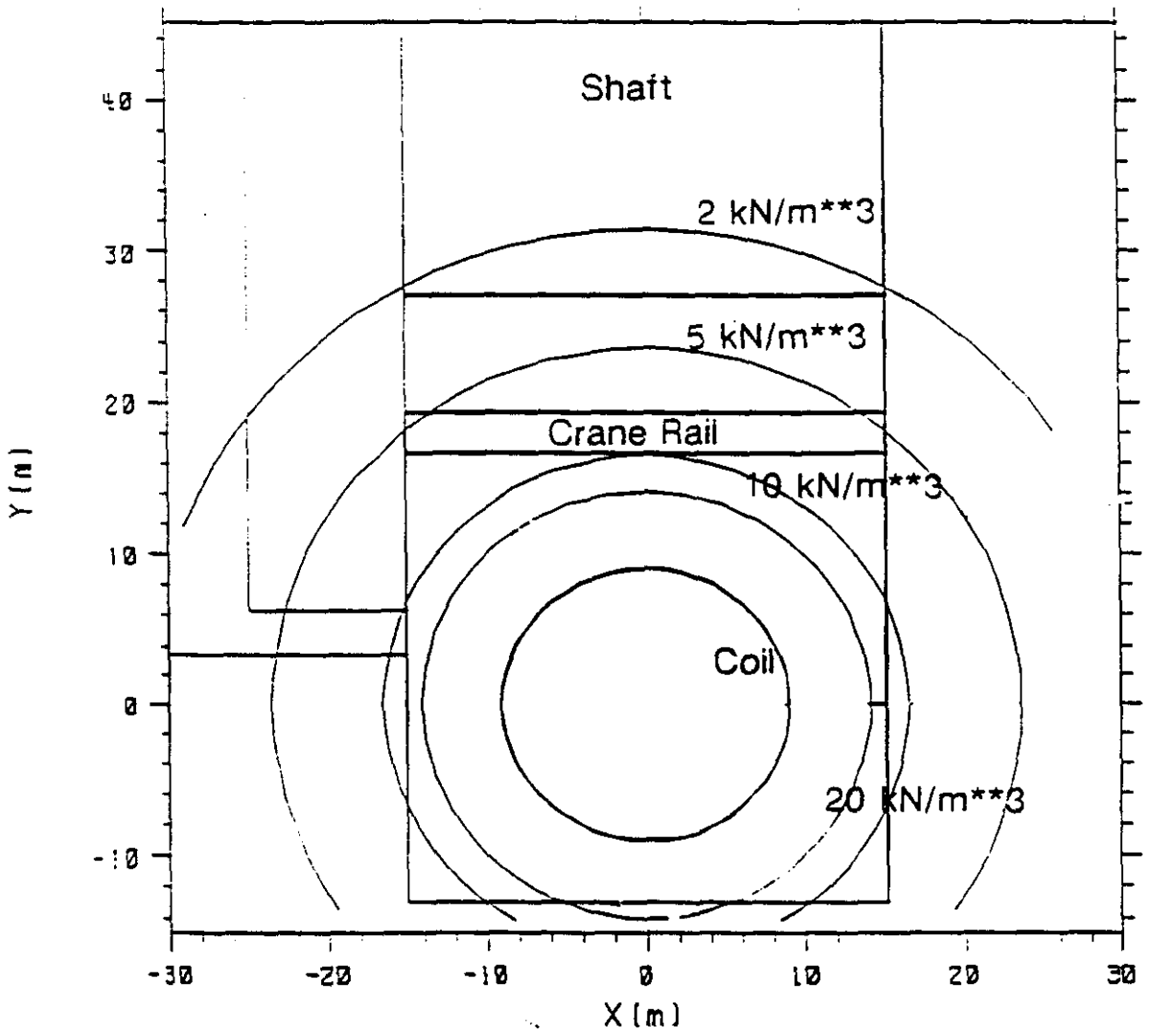

Fig. 6 – Contours of constant body force density for the baseline design for GEM in the plane of the coil center at Z = 0. A small magnetizable body at any point along a contour will experience a body force density of the magnitude indicated. For iron at 7800 kg/m**3. 1 kN/m**3 of body force density translates to an acceleration 0.013 g's.

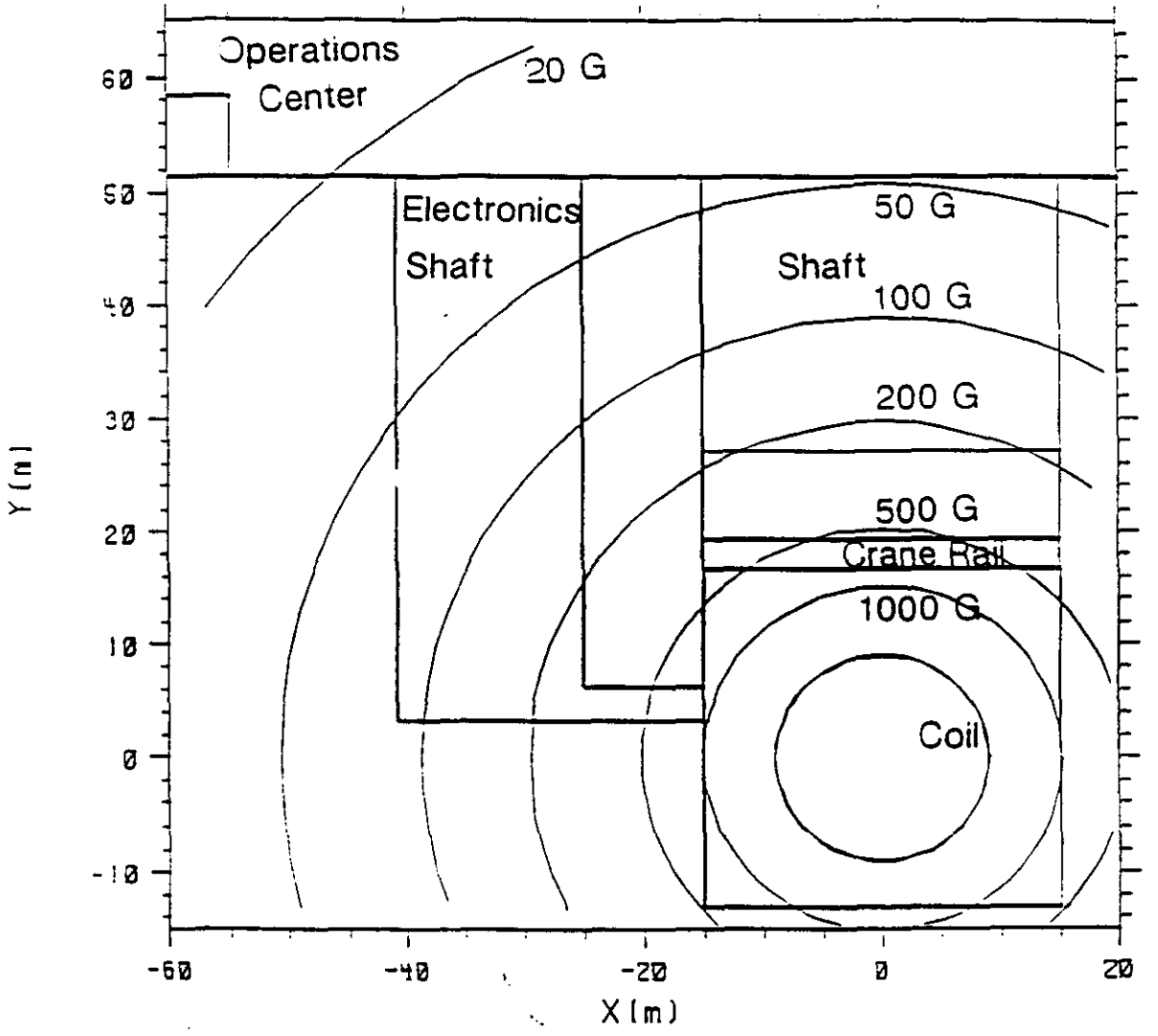

Fig. 7 – Contours of constant flux density for the baseline design for GEM in the plane through the end of the flux concentrator at Z = 18. Counting room flux density level is 50 to 200 G.

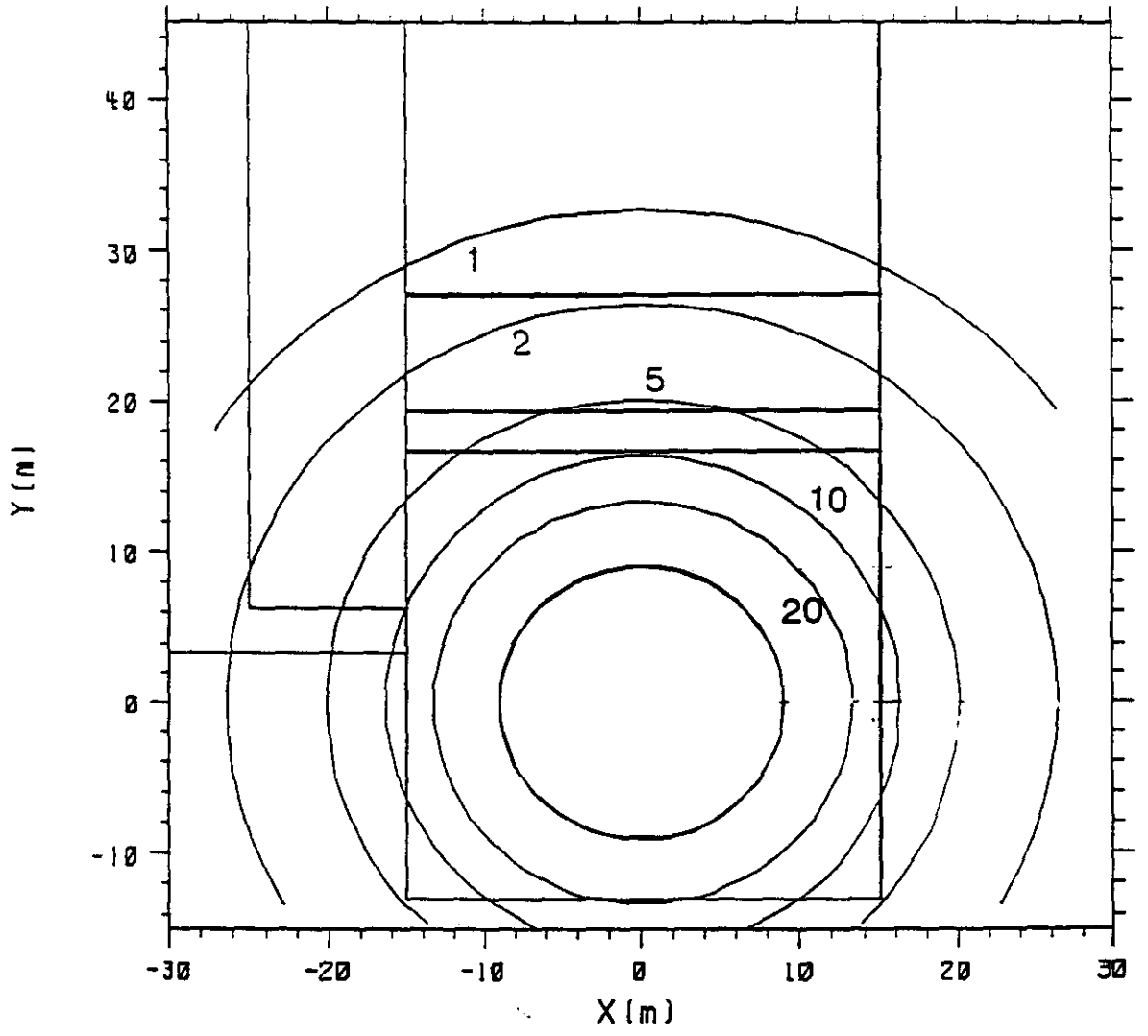

Fig. 8 – Contours of constant body force density for the baseline design for GEM in the plane through the end of the flux concentrator at Z = 18. A small magnetizable body at any point along a contour will experience a body force density of the magnitude indicated. For iron at 7800 kg/m**3, 1 kN/m**3 of body force density translates to an acceleration 0.013 g's.