SSC LABORATORY LIBRARY
JUL 1 1992

GEM TN-92-113
HWB-92-004

Muon Engineering Status Meeting - Draper

June 10, 1992

Abstract:

The agenda, attendees, and transparencies of the GEM Muon Engineering Status Meeting held on June 10, 1992 at Draper Laboratory are presented. Agenda items: Remarks - Frank Taylor; Overview-Draper Activities; Prep for PAC Meeting; Update of Cost Matrix; Design Issues; and Review/New Action Items.

AGENDA

GEM MUON ENGINEERING STATUS MEETING

AT DRAPER
(ROOM 2259)

3PM--10 JUNE 1992

1) REMARKS	FRANK TAYLOR	5 MIN
2) OVERVIEW-DRAPER ACTIVITIES	HOWARD BAKER	5 MIN
3) PREP FOR PAC MEETING		
A) MUON SYSTEM DESIGN	FRANK NIMBLETT/ET EL	
B) MUON SYSTEM ALIGNMENT (local)	JOE PARADISO	
4) UPDATE OF COST MATRIX	DICK GUSTAVSON	10 MIN
5) DESIGN ISSUES	COLEMAN JOHNSON	
6) REVIEW/NEW ACTION ITEMS	ALL	
7) SET AGENDA FOR NEXT WEEK	ALL	
8) ADJOURN	TARGET IS NO LATER THAN ~~5PM~~ 6 PM	

Attendance List

ATTENDEES LIST-GEM MUON ENGINEERING MEETING

10 June 1992

NAME	ORG	TEL#	FAX#	E-MAIL
HOWARD BAKER	DRAPER	617-258-3411	617-258-1333	hbaker@draper.com
DICK GUSTAVSON	DRAPER	617-258-2914	617-258-1131	REG2914@DRAPER.com
Jim Gorman	Draper	617-258-1514	617-258-1131	JJG1514@Draper.com
Frank Taylor	MIT	617-253-7249	[illegible]-1755	MIT LNS11 FET
MICHAEL M ZOCHA	CSDL	" " -2126	258-1131	mms2126
MIKE DIPERO	CSDL	" 258-2775	"	MDD2775
Coleman Johnson	CSDL	(214)705-1185	[illegible]	Johnsol[illegible] VX1
Jim Kelsey	MIT	617-253-2069		Kelsey@MITLNS
MARTIN FUREY	DRAPER	617-258-4662	258-1131	
Joe Poirier	Martin	303 971 9284	971-[illegible]	SSCVX1 [illegible]
Frank Nimblett	Draper	617-258-1383	258-1131	NIMBLETT@DRAPER.com
Larry Rosenson	MIT	617-253-7595	253-1755	ROSENSON@MITLNS
Joe Paradiso	Draper	617-253-2413	253-4444	neuromancer@drapv.com

H. Baker/Draper

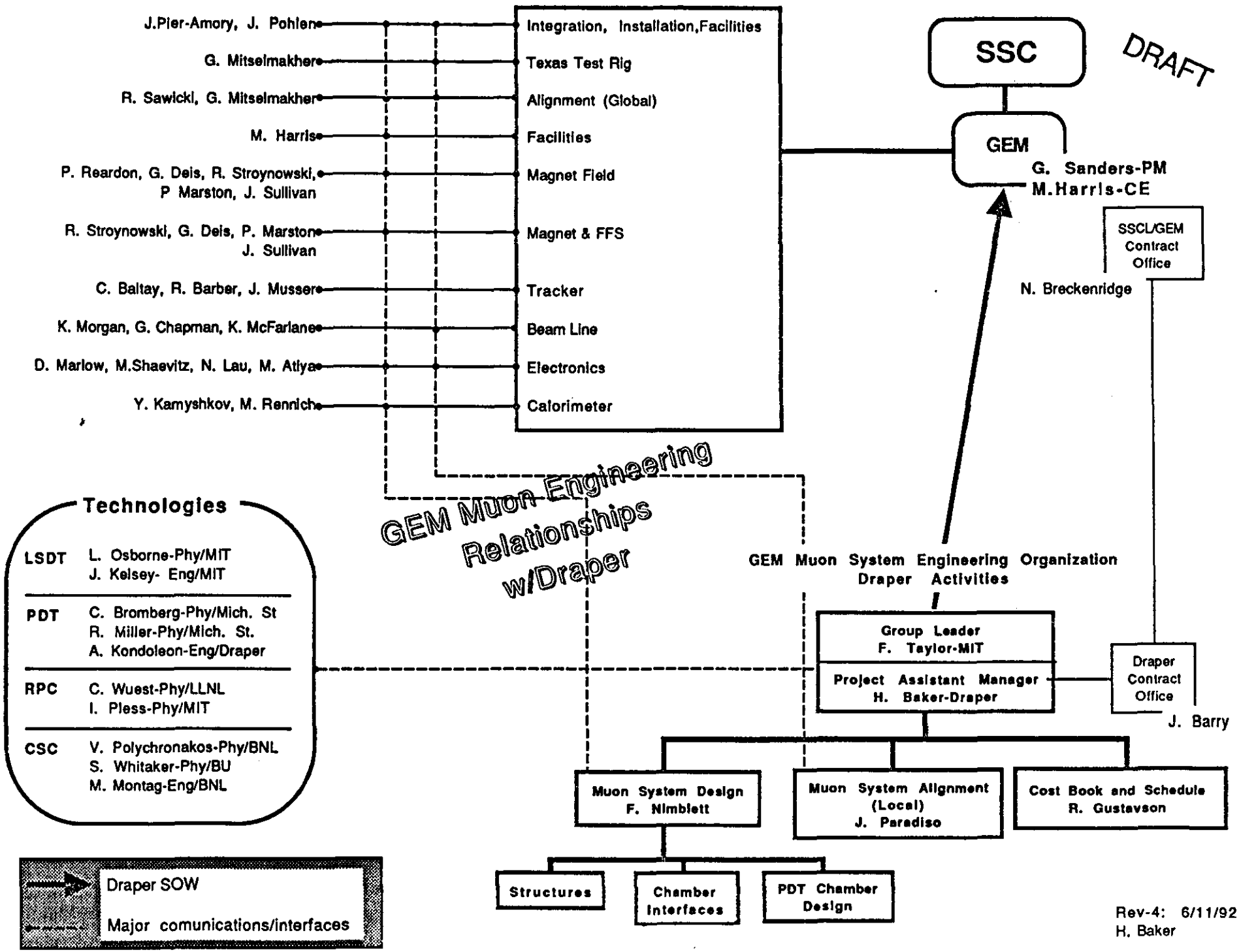
GEM Muon Engineering Relationships w/Draper
DRAFT
SSC
GEM
G. Sanders-PM
M.Harris-CE
SSCL/GEM Contract Office
N. Breckenridge
J.Pier-Amory, J. Pohlen
G. Mitselmakher
R. Sawicki, G. Mitselmakher
M. Harris
P. Reardon, G. Deis, R. Stroynowski, P Marston, J. Sullivan
R. Stroynowski, G. Deis, P. Marston, J. Sullivan
C. Baltay, R. Barber, J. Musser
K. Morgan, G. Chapman, K. McFarlane
D. Marlow, M.Shaevitz, N. Lau, M. Atiya
Y. Kamyshkov, M. Rennich
Integration, Installation,Facilities
Texas Test Rig
Alignment (Global)
Facilities
Magnet Field
Magnet & FFS
Tracker
Beam Line
Electronics
Calorimeter
Technologies
LSDT L. Osborne-Phy/MIT J. Kelsey- Eng/MIT
PDT C. Bromberg-Phy/Mich. St R. Miller-Phy/Mich. St. A. Kondoleon-Eng/Draper
RPC C. Wuest-Phy/LLNL I. Pless-Phy/MIT
CSC V. Polychronakos-Phy/BNL S. Whitaker-Phy/BU M. Montag-Eng/BNL
GEM Muon System Engineering Organization
Draper Activities
Group Leader F. Taylor-MIT
Project Assistant Manager H. Baker-Draper
Draper Contract Office
J. Barry
Muon System Design F. Nimblett
Muon System Alignment (Local) J. Paradiso
Cost Book and Schedule R. Gustavson
Structures
Chamber Interfaces
PDT Chamber Design
Draper SOW
Major comunications/interfaces
Rev-4: 6/11/92
H. Baker

GEM MUON SYSTEM ENGINEERING MASTER SCHEDULE
DRAPER ACTIVITIES

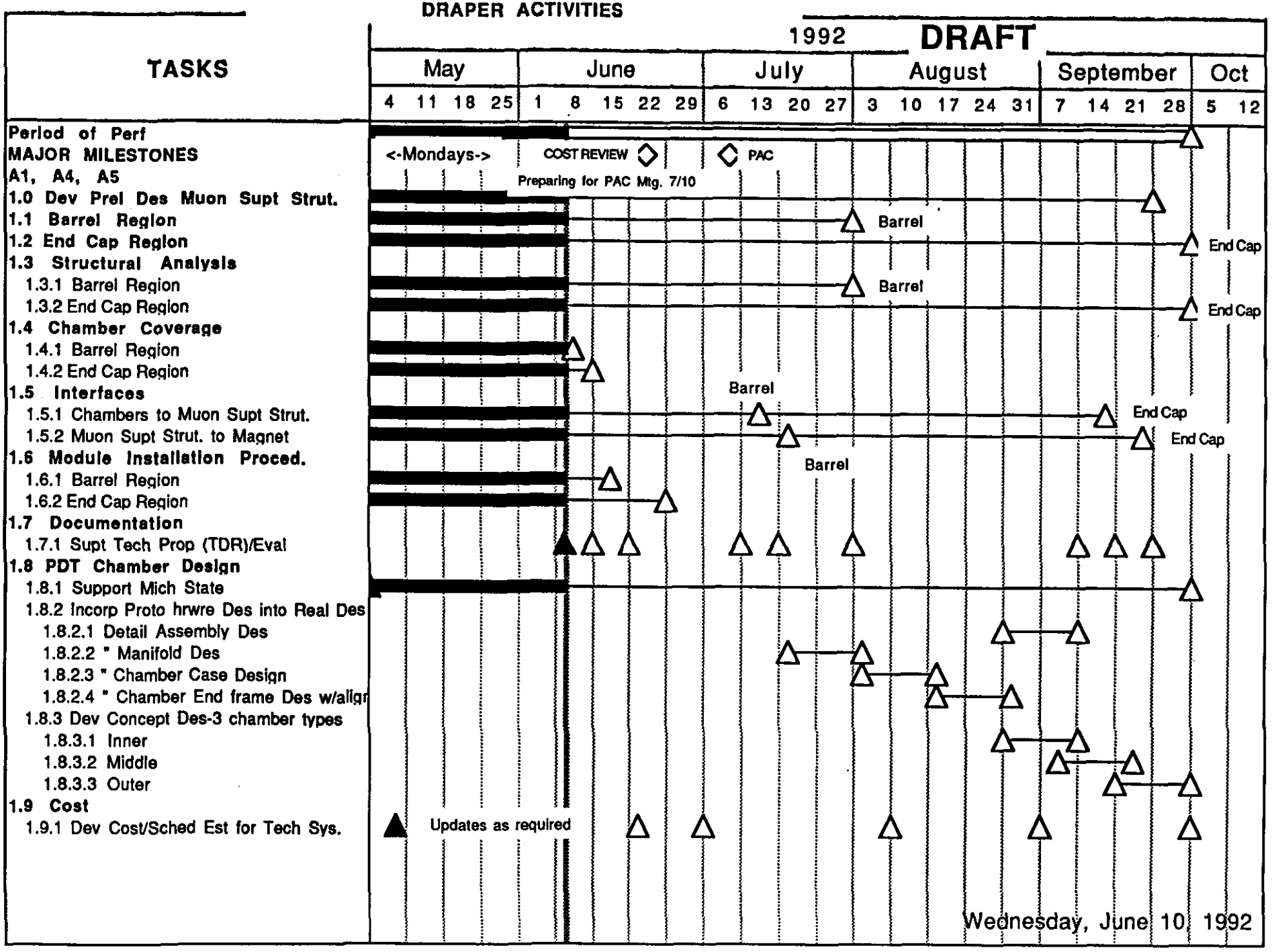

GEM MUON SYSTEM ENGINEERING MASTER SCHEDULE
DRAPER ACTIVITIES

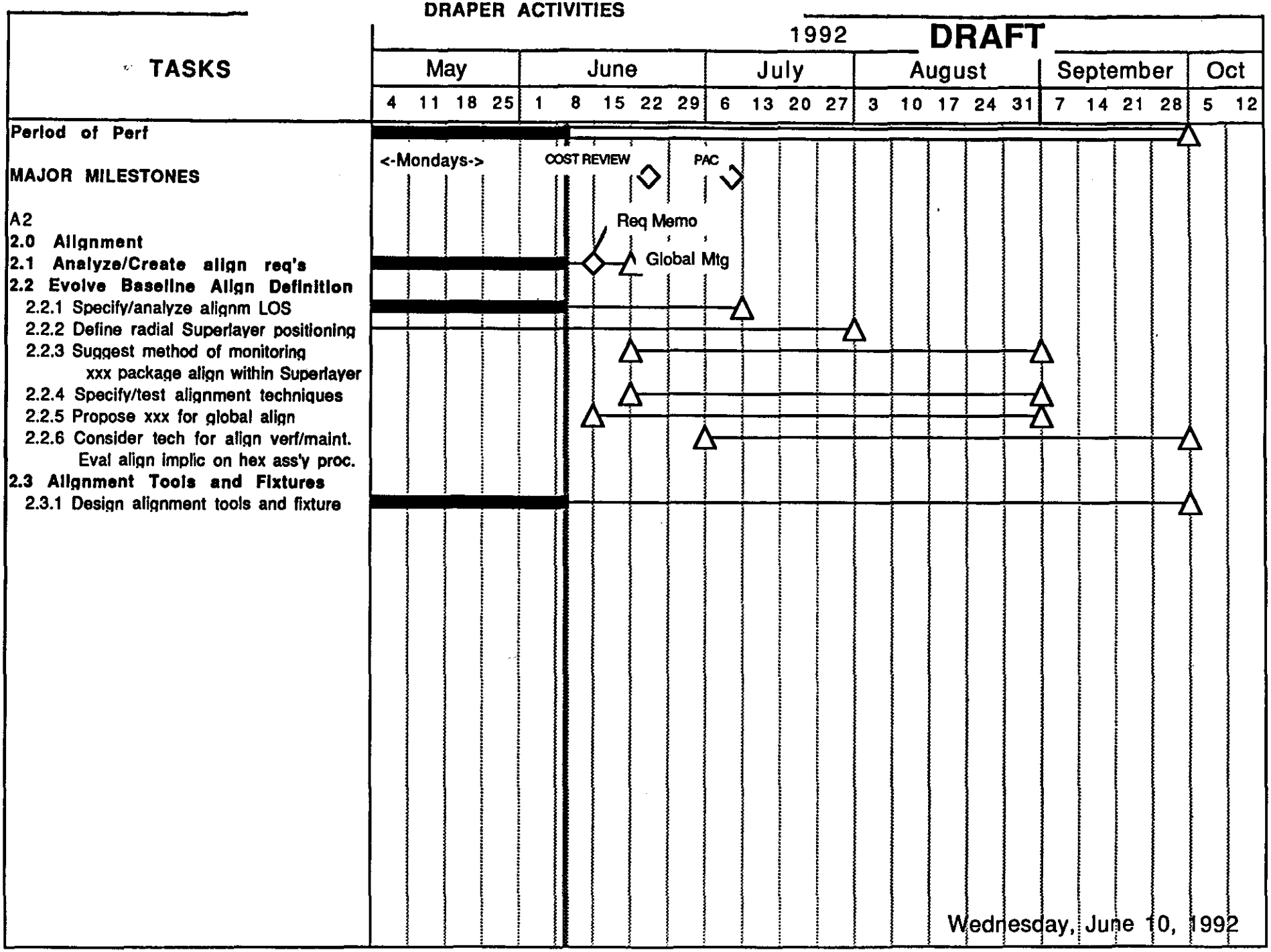

GEM MUON System Engineering Schedule for PAC Status Report
Draper Activities

DRAFT

Prep for PAC Meeting

June: 8 9 10 11 12 13 14 15 16 17 18 19 20 21 22 23 24 25 26 27 28 29 30
July: 1 2 3 4 5 6 7 8 9

Period of Perf

1) Muon Sys Design (Nimblett)
- a) Details of the S.S.
  - 1) 3-d dr of mods w/chm, Bar&EC
  - 2) Details of joints
    - a) 3-dim dr of 1 joint
  - 3) Details of str attach to mag
  - 4) Details of interf hdwre-chm/S.S
    - a) Chm end w/align hdwre
    - b) Chm in structure
    - c) Coverage in theta/phi for
      - 1) PDTs
      - 2) LSDTs
      - 3) CSC in End Cap
    - d) Mod instal process (Bar/ EC)
- b) Disc of struct. & ther anal (Bar/EC)
- c) Indiv mod concpt for Bar region

2) Muon Sys Align/Lcl (Paradiso)
- a) Baseline designw/r SWAT, RASNIK
- b) Identify scheme for Superlayer spac
- c) Define parameters forstruct. draw's

TBD

Wednesday, June 10, 1992

6/1/92 HWB
Rev 1

Preparation for July PAC Meeting

Gem Muon System Engineering/Draper Product

Details of Design

1. Muon system design
2. Muon System Alignment (Local)

1) Muon System Design (Nimblett)

a) Details (real drawings) of the support structure to include the following
   1) 3-dimensional drawings of modules with chambers, barrel region ass'y, end cap region ass'y
      (3 dimensional drawings will depend upon Draper personnel availability)
   2) Details of joints
      a) 3-D drawing of 1 joint *(same comment)*
   3) Details of structure attachment to magnet
   4) Details of interface hardware between chambers and support structure
      a) Chamber end with alignment hardware
      b) Chambers in structure
      c) Coverage in θ and ϕ for PDTs and LSDTs
      d) Module installation process (Barrel and Endcap)

b) Discussion of structural and thermal analysis for both regions

c) Individual module concept for barrel region

2) Muon System Alignment/Local (Paradiso)

a) Proposed local alignment scheme and analysis of performance
   1) Baseline alignment system will be composed of 3-point optical straightness monitors and stretched wire devices (SWAT's)
   2) Identify spacers for monitoring chamber spacing
   3) Define alignment lines-of sight, needed clearances, fixture locations, and spacers to the drawings of the muon system

FRANK NIMBLETT
8 JUNE 1992

(DRAFT)

Please review and make comment !!

GEM Muon Effort For June (Preparation for July PAC Meeting)

GENERAL BACKGROUND INFORMATION:

- MUON SYSTEM DESIGN WILL BE BASED ON THE CONCEPT OF BARREL REGION MODULES INDEPENDENTLY MOUNTED TO THE MAGNET ENDPLATES (16 MODULES PER END)
- BOTH BARREL REGION DRIFT CHAMBER OPTIONS (PDTS AND LSDTS) MUST BE REPRESENTED!
- BARREL REGION Z-MEASUREMENT & TRIGGER CHAMBERS (RPCS) MUST ALSO BE REPRESENTED FOR BOTH DRIFT CHAMBER OPTIONS.
- ENDCAP CAP MUON SYSTEM WILL BE CATHODE STRIP CHAMBERS (CSCS), WITH OVERLAP BETWEEN MODULES IN PHI (ANGLE ABOUT THE BEAMLINE) AND THETA (ANGLE FROM THE BEAMLINE).
- ENDCAP MUON SYSTEM SUPPORT WILL BE INDEPENDENT OF BARREL REGION MUON SYSTEM AND PREFERABLY A 3 POINT MOUNT FOR VERTICAL LOADS; AXIAL RESTRAINT MUST ALSO BE INCLUDED FOR STABILITY
- GEM BASELINE SPECIFICATION IS THE SOURCE OF INTERFACE INFORMATION!!
- ALL OUTPUT TO BE ILLUSTRATED IN METRIC SYSTEM!!
- ALL FIGURES TO BE PLANNED FOR 8.5 x 11 FORMAT
- ALL FIGURES, GRAPHS, TABLES WHICH ARE PRODUCED SHOULD BE FULLY LABELED AND DATED AND PRODUCED IN BOTH PAPER HARDCOPY AND TRANSPARENCY FORMAT (2 COPIES OF EACH PREFERABLE)
- ALL STRUCTURAL ANALYSIS OUTPUT SHOULD INCLUDE A BRIEF STATEMENT OF THE PROBLEM WITH BOUNDARY CONDITIONS PLUS A SUMMARY SHEET OF PERTINENT DEFLECTIONS AND OR STRESSES WHICH CAN BE RELATED TO AN UNDERSTANDABLE WELL LABELED FIGURE OR FIGURES.

DETAIL INFORMATION: (OUTPUT EXPECTED FOR JULY PAC MEETING, DUE BY JUNE 30) ----------(RESPONSIBLE PERSON)

- **BARREL REGION AND ENDCAP REGION MUON SUPPORT STRUCTURES**

  - **CHAMBER LAYOUTS FOR BOTH DRIFT CHAMBER TYPES** AS WELL AS THE RPC POSITIONS FOR EACH DRIFT CHAMBER TECHNOLOGY---- ----------**F. NIMBLETT**

  - **CHAMBER COVERAGE** FOR THE DETECTOR ----------**F. NIMBLETT**

  - **ELEVATION AND ENDVIEWS OF EACH CHAMBER OPTION** INCLUDING THE RPCS WITH APPROPRIATE STRUCTURE (PLATE IN MIDDLE CHAMBER AREA TO BE INCLUDED!!).---------- ----------**M. DEPIERO/B. BIGGIO**

  - **3D PICTURES OF CHAMBERS AND MODULES** (IDEAS / PATRAN) FOR BOTH REGIONS (ALTERNATIVE OPTION IS TO PROVIDE 3 VIEWS)------- -----**M.FUREY / T. HINES** (3D)------OR M. DEPIERO/B. BIGGIO (3 VIEWS)

  - **DETAILS OF SUPPORT STRUCTURE DESIGN** ----------**(MIKE DEPIERO & BETTY BIGGIO)**
    - OVERALL STRUCTURE (DETAILS OF TRUSS ELEMENTS (2))
    - JOINT DETAILS (AT LEAST TWO, INCLUDING PLATE JOINTS)
    - <u>DETAILS OF INTERFACE WITH MAGNET ATTACHMENT PLATE</u>
    - <u>DETAIL OF STRUCTURE / CHAMBER END / ALIGNMENT LINES OF SIGHT (CONCEPTUAL BUT TIED TO ACTUAL DRAWINGS)</u> ---------- ----------**(T. KONDOLEON/DRAFTING)**

  - **ANALYSIS OF STRUCTURE FOR BOTH REGIONS:**----------**M. FUREY**
    - **BARREL REGION ANALYSIS (INDEPENDENT MODULES WITH PLATE STRUCTURE) (DEFORMATION AND STRESS)**
    - **MAGNET ATTACHMENT PLATE**
    - **BARREL REGION INSTALLATION** CALUCULATIONS FOR MODULE, INTERFACE PLATE AND CRYOSTAT **(DEFORMATION AND STRESS)**
    - ENDCAP REGION INSTALLATION **(DEFORMATION AND STRESS).**
    - ENDCAP REGION (ASSEMBLY OF 16 MODULES WITH 3-POINT VERTICAL MOUNT AND EXTRA TRIANGULAR TRUSS) **(DEFORMATION AND STRESS).**
    - **THERMAL ANALYSIS ONLY IF EVERYTHING ELSE COVERED!**

  - **ANGULAR PHI COVERAGE DWGS.** (PDT AND LSDT)----**B. BIGGIO**

- **DETAILS OF CHAMBER / STRUCTURE INTERFACE / WITH ALIGNMENT**
  ----------(TONY KONDOLEON / DRAFTING)

  - **INNER AND OUTER CHAMBER LAYER REQUIREMENTS:**
    (FLEXURAL FEET WITH ADJUSTMENT CAPABILITY FOR LEVELING OF CHAMBERS , MANUAL LATERAL ADJUSTMENTS, LOCKS, AXIAL ADJUST / RESTRAINT ALONG WITH SOME INDICATION OF CHAMBER END CONSTRUCTION)(ALL CHAMBERS OPTIONS SHOULD BE INDICATED IN SOME SIMPLE FORM TO POINT OUT THE DIFFERENCES BETWEEN THE TECHNOLOGIES)

  - **MIDDLE CHAMBER LAYER REQUIREMENTS:**
    (FLEXURAL FEET WITH ADJUSTMENT CAPABILITY FOR LEVELING OF CHAMBERS , MANUAL LATERAL ADJUSTMENTS, NO LOCKS, AXIAL ADJUST / RESTRAINT ALONG WITH SOME INDICATION OF CHAMBER END CONSTRUCTION, LATERAL SERVO SYSTEM TO POSITION MIDDLE CHAMBER, CHAMBER WEIGHT UNLOADING SYSTEM 1) (PNEUMATIC) TO UNLOAD SERVO SYSTEM DURING ADJUSTMENT OPERATION) 2) (LONG THROW SPRING SYSTEM SO THAT THE SERVO WORKS AGAINST A SOFT SPRING)

- **BARREL REGION AND <u>ENDCAP REGION</u> MUON INSTALLATION**
  ----------M. DEPIERO

  - **INSTALLATION SEQUENCE** WITH SEVERAL <u>SIMPLE</u> VIEWS ILLUSTRATING <u>PERTINENT FIXTURING</u> FOR <u>BOTH REGIONS.</u>

  - **DETAIL ONLY CRITICAL FEATURES** AND EVEN THEN KEEP IT SIMPLE!!

  - INDICATE HOW **TRANSITION** IS MADE **BETWEEN INSTALLATION HARDWARE** AND THE **FINAL MOUNTING HARDWARE** TO THE MAGNET!!

  - INDICATE **ADJUSTMENT CONSIDERATIONS** TO PROPERLY **POSITION A BARREL MODULE IN ITS DESIRED ORIENTATION.**

  - **INDICATE MEANS OF TRANSFERRING LOAD FROM FFS TO MAGNET FOR THE "THREE-POINT MOUNT WITH AXIAL RESTRAINT" FOR THE ENDCAP STRUCTURE.**

Frank Taylor/M.I.T.

FET June 10, 1992

Muon Engineering Meeting at Draper

Face:

Cost Review June 23 - 24
BASELINE - II June 25 (some items due June 12)
PAC July 11 and 12
TDR Drafts (already late)

Needed:

(I) Cost Review Updates

(1) One hour presentation by Nimblett and Gustavson

(2) New information from Craig Wuest on RPCs
and from Carl Bromberg on PDTs

(II) For BASELINE - II and PAC

(1) New text of major sections of Baseline document

(2) Updated milestones

(3) Flux Concentrator at [9.4] degrees and nonprojective
new B-field calculations
new resolution simulations

(4) Barrel - keep 8-8-4 configuration (pattern recognition)

(5) Endcaps - cost an 8-8-4 CSC configuration
Change to 8-8-4 ? Pattern recognition may be a problem.

(6) Updated drawings of chamber construction
Request has been made of the tech-proponents

(7) Support Structure
Details of truss work - barrel and endcaps

(8) Deployment of chambers in support structure
Overlap or non-overlap?
Coverage ?
Lever arm ?
Material distribution

(9) Updated tables:
Chamber weights
Channel count
Gas volumes

(10) Alignment System:
Table of requirements (tolerance for all dimensions)
Comparison of alignment technologies
Alignment paths delineated on support structure
Matrix of transfers

(1~~2~~) Updated Simulations:
Backgrounds (with new calorimeter)
11 Trigger
Resolutions (8-8-4 in endcaps, new FC)

Frank Nimblett/Draper

Frank Nimblett
10 June 1992

Status Meeting

- Baseline Muon System configuration (decision at Eng. Meeting 02 June)
  - Independent Barrel Region Modules attached to end plate of magnet (assumes monitoring hardware to measure angular and possibly linear shifts associated with the magnet)
    - Levels to better than 0.1milliradians
    - Displacements of the order of 100 microns (TBD)
  - Endcap to be 16 modules assembled into a single structure on the FFS and then mounted to the magnet independently of the barrel region
- Initial Analysis from both Draper and LLNL are promising
  - Deformation due to point loading on cryostat wall with 4"x4" rail attached appears safe (.15" displacement. no vacuum) M. Furey
  - Angular and linear displacements of magnet Ends and FFS also appear acceptable (larger than toleranc but easily measured)
    - FFS --- Total Z Movement due to magnet .28"+ .13"
    - FFS should be considered as permanent mount !!
    - End Plates --Delta's due to magnet .04", 7 x 10^{-5} rad.
    - LOCAL MODEL --- .03", 2.3 x10^{-3} rad.
  - More detail has been requested of Joel Bowers. Hopefully enough detail can be supplied to create a polar plot of the end ring illustrating changes in angle
- Chamber End with hardware <u>Sketch</u> completed (Minimum space on ends of chambers is 200 to <u>250</u> mm)
- PDT and LSDT "F" coverage examined for the baseline spacing
  - PDTs--1st tube -- 10.73°(95.4%) ; 8tubes -- 10.32°(91.7°)
  - LSDTs-- 1st tube -- 9.74°(86.6%) ; 8tubes -- 9.62°(85.5%) <u>DOES NOT include</u> lost edges in <u>outer layer of LSDTs!!</u>

- <u>Highest NIMBLETT PRIORITY this week will be comparing chamber layout options for Theta for PDTs Coverage. Chamber layout determines structure. LSDT layout is essentially set!</u>

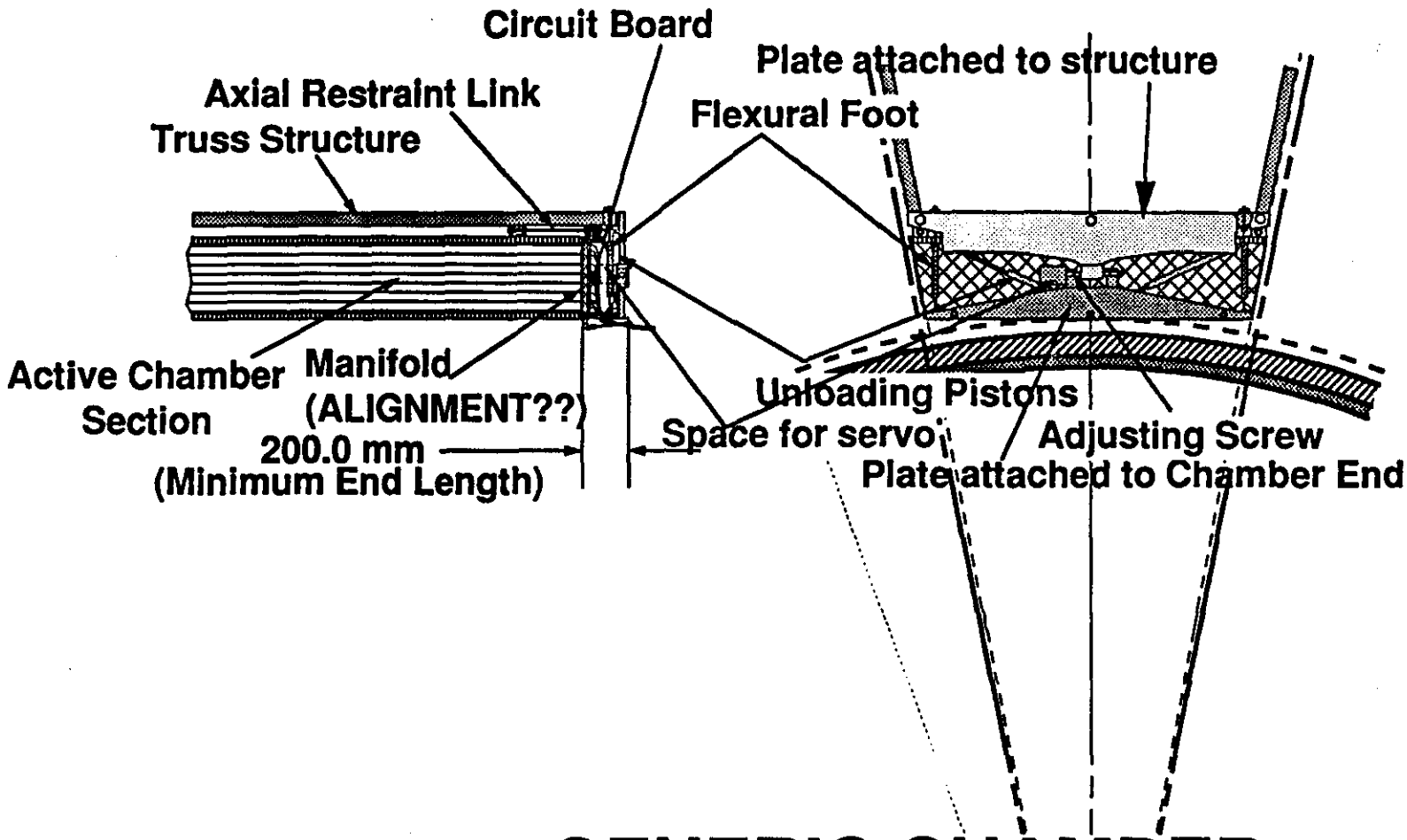

GENERIC CHAMBER ATTACHMENT HARDWARE

(ALL OPTIONS INDICATED)

RPCs Not Illustrated!!

F. NIMBLETT
DRAPER LAB.
10 JUNE 1992

rd

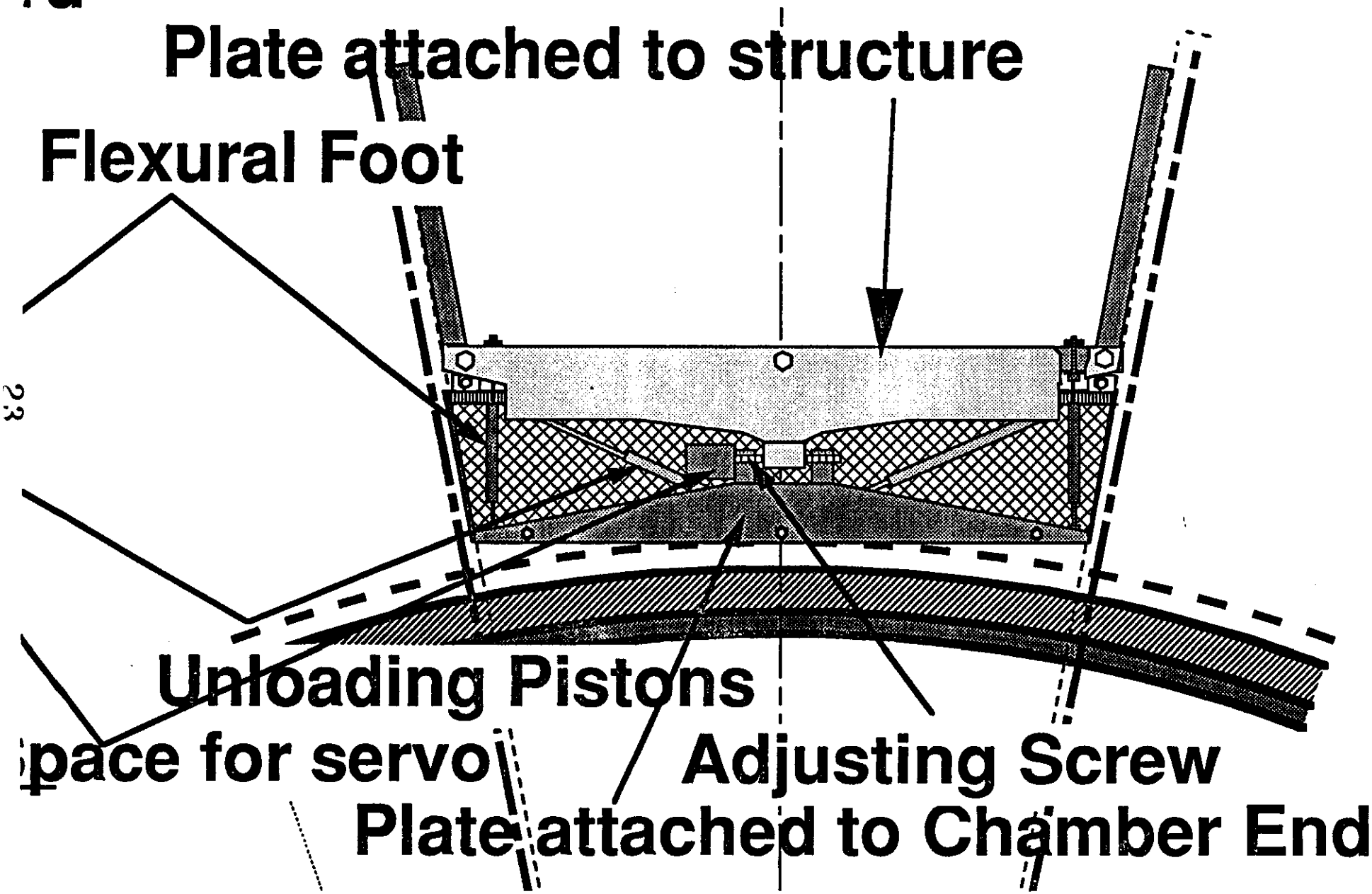
Plate attached to structure
Flexural Foot
Unloading Pistons
pace for servo
Adjusting Screw
Plate attached to Chamber End

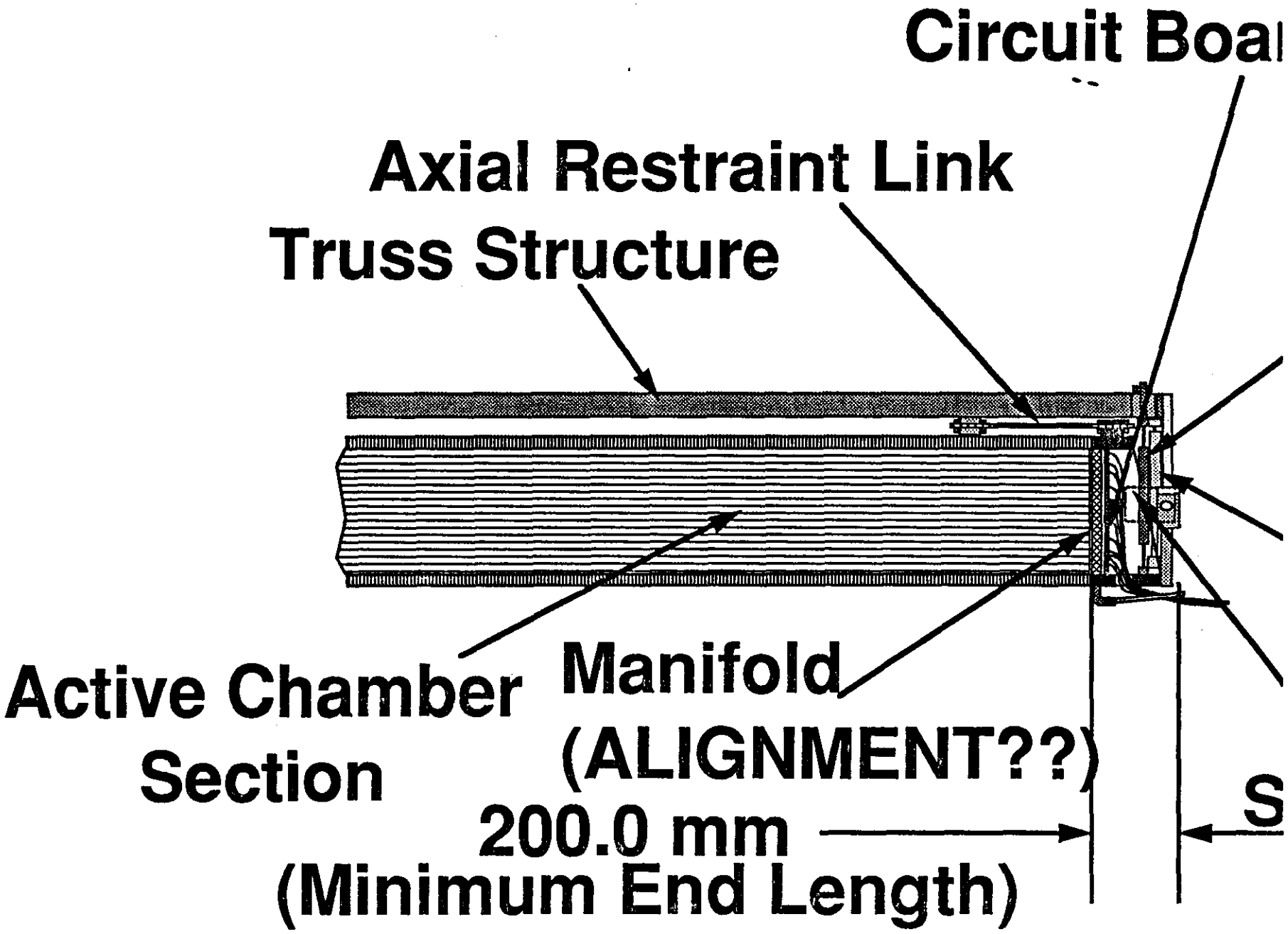
Circuit Boa
Axial Restraint Link
Truss Structure
Active Chamber
Section
Manifold
(ALIGNMENT??)
200.0 mm
(Minimum End Length)
S

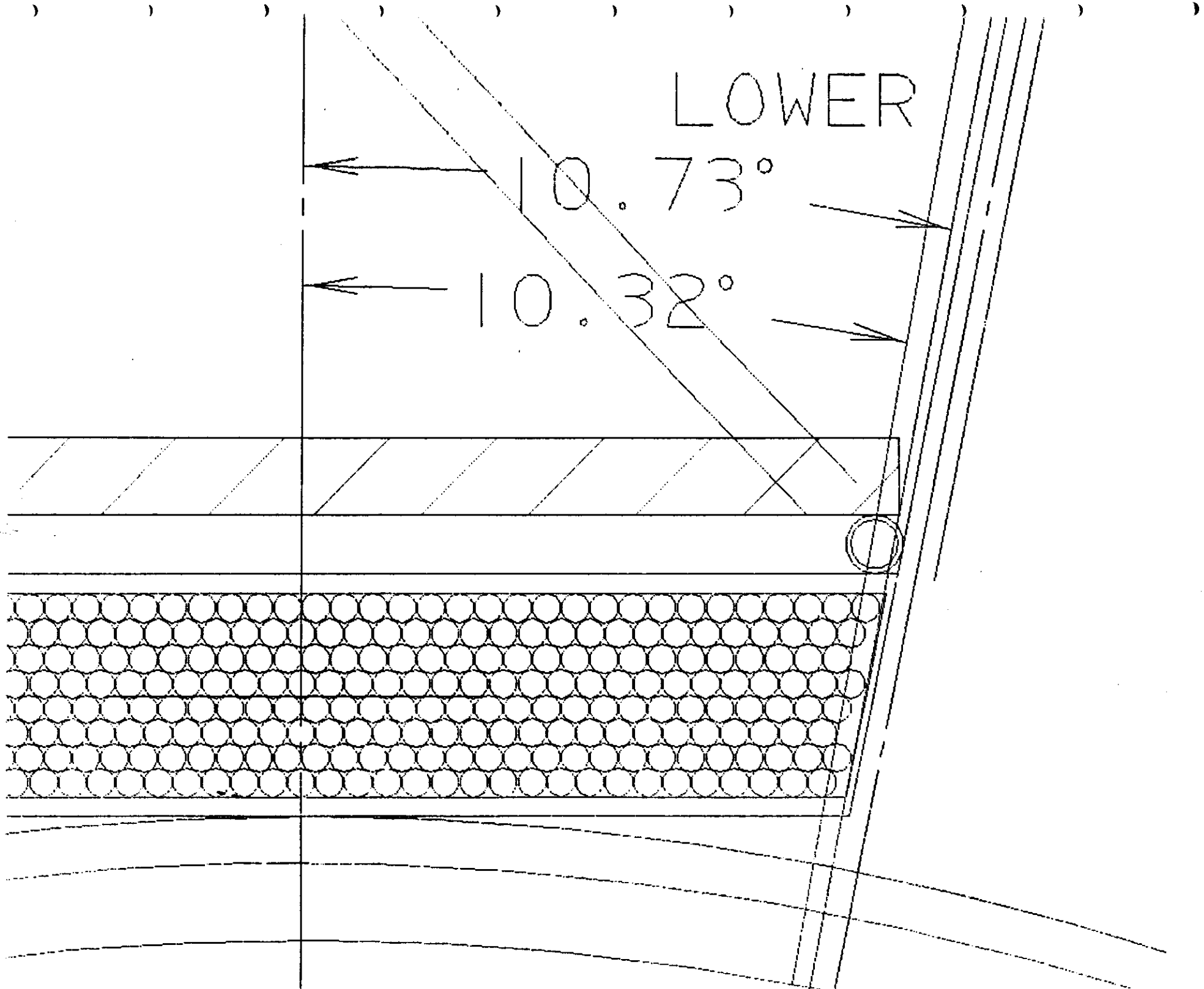
LOWER
10.73°
10.32°

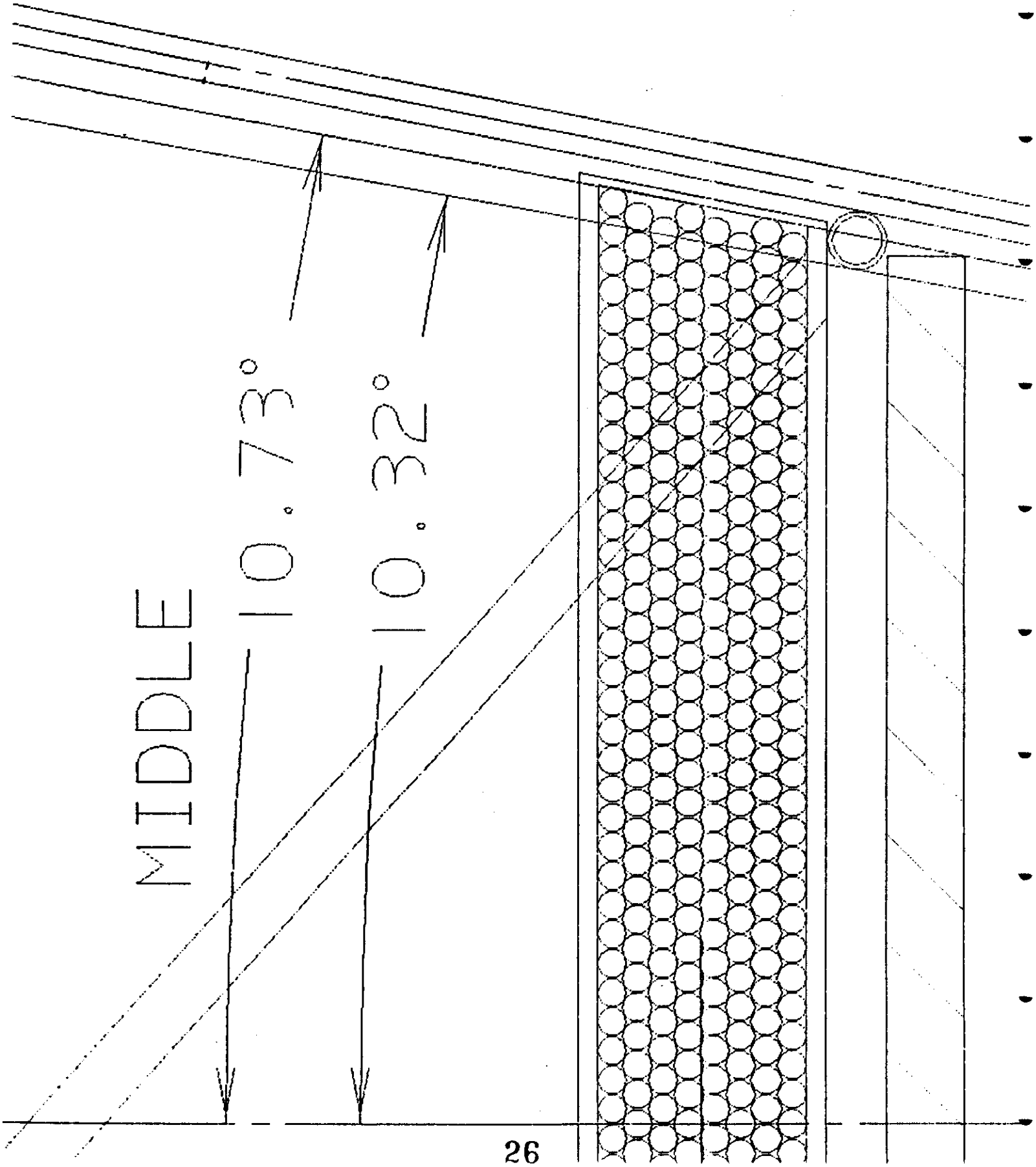
MIDDLE
10.73°
10.32°

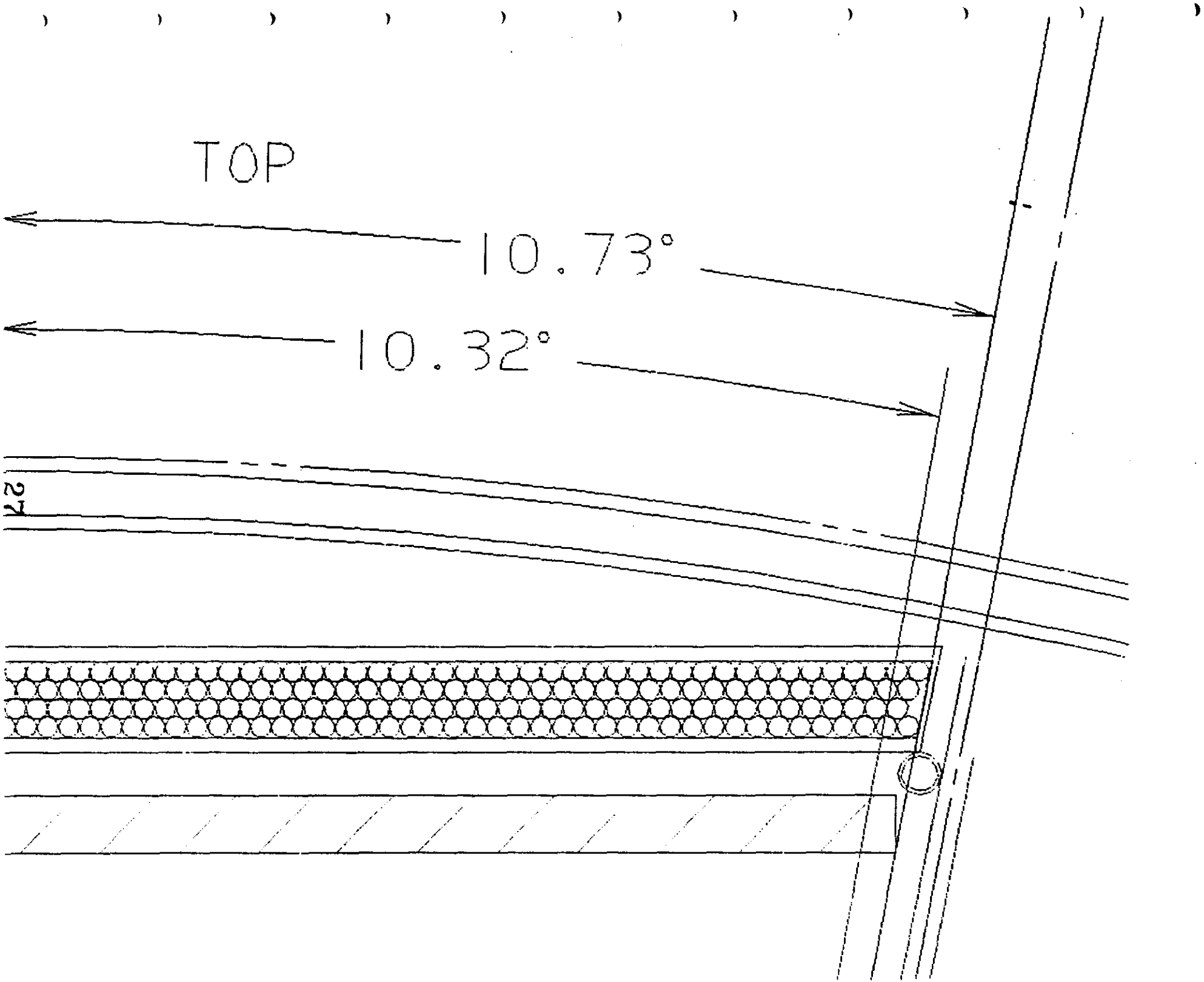
TOP
10.73°
10.32°
27

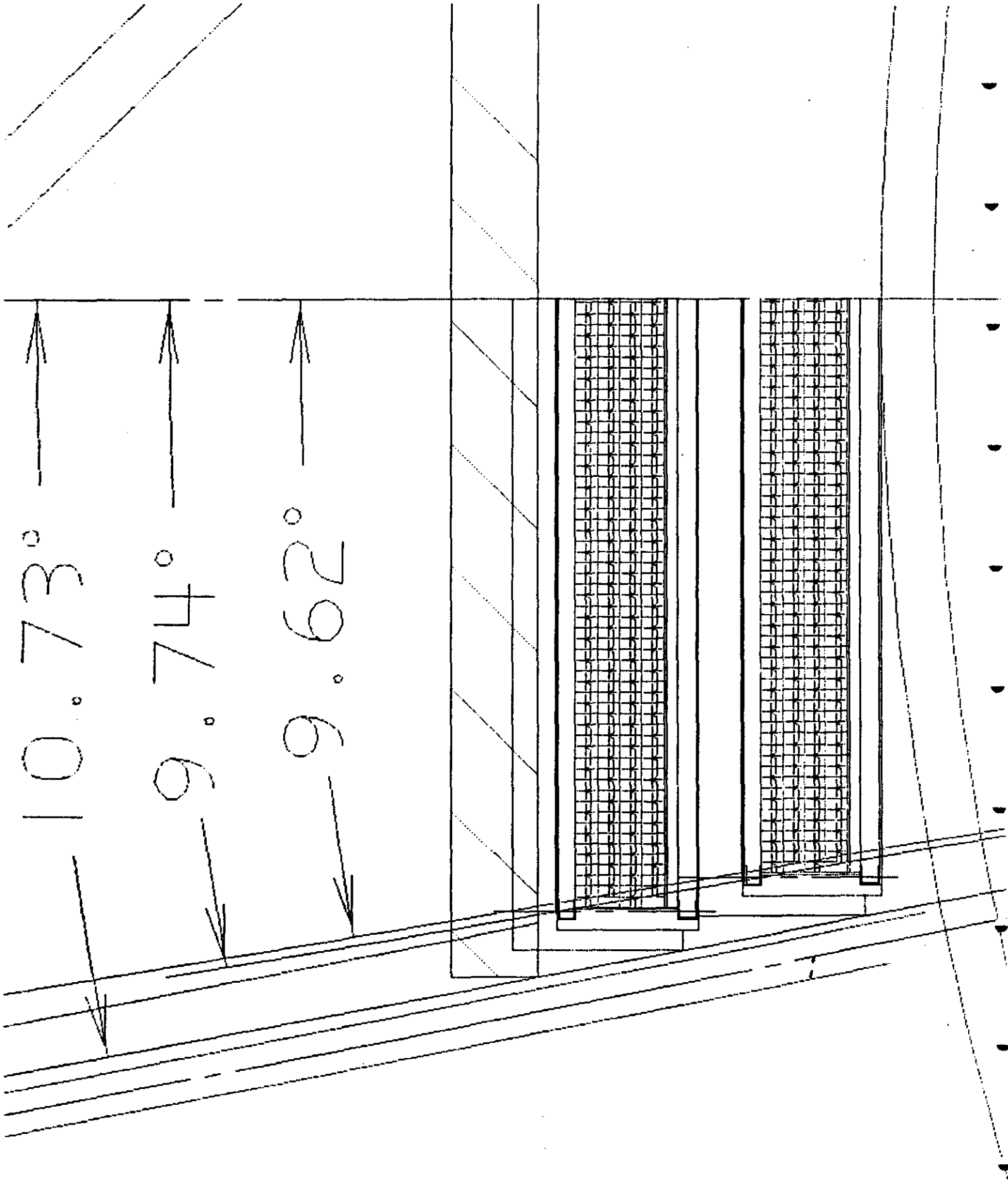
10.73°
9.74°
9.62°

Mike DePiero/Draper

DEPIERO
6/10/92

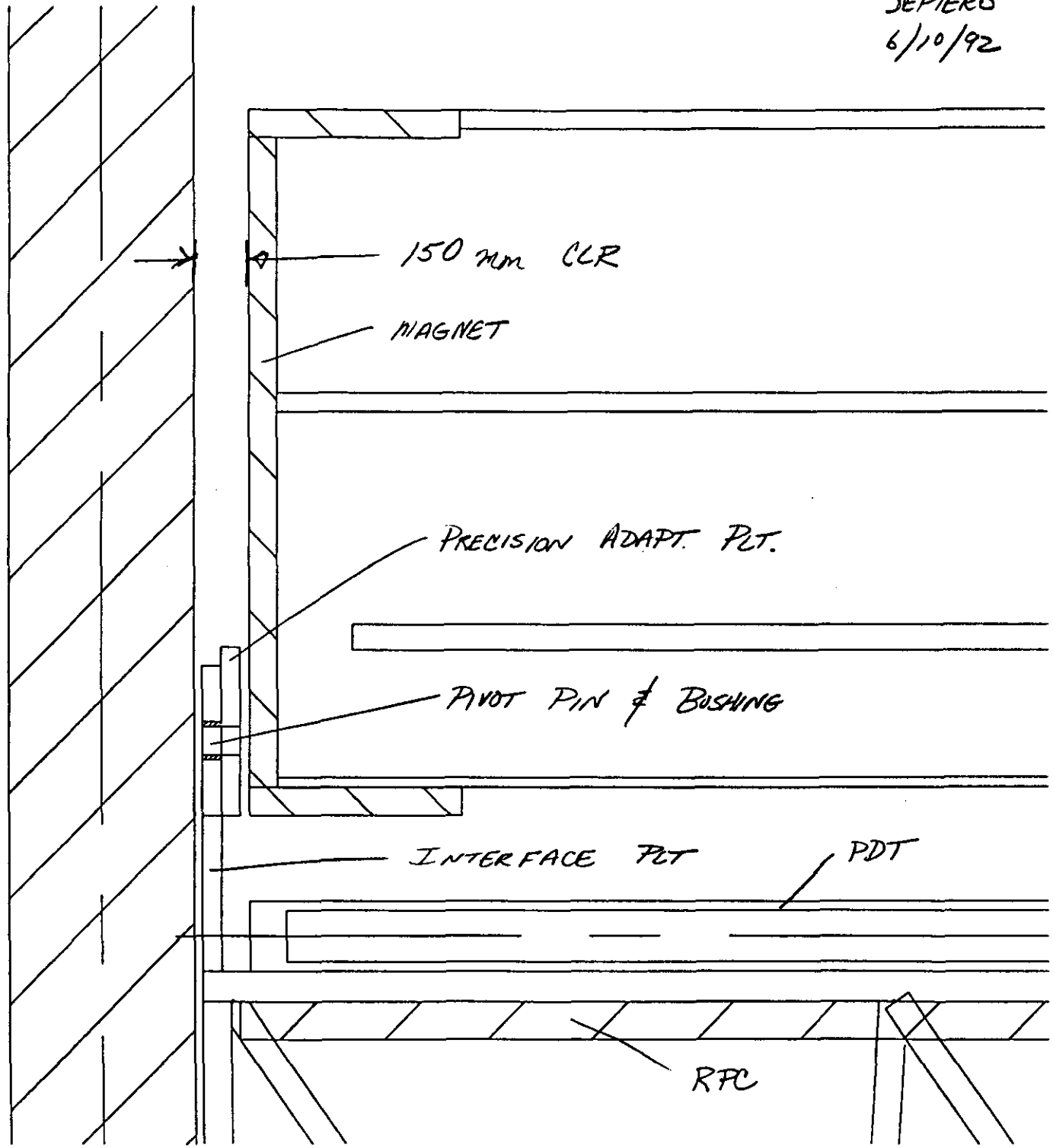

NOTE:

1. PRECISION ADAPT PLT TO MAGNET INTERFACE TBD

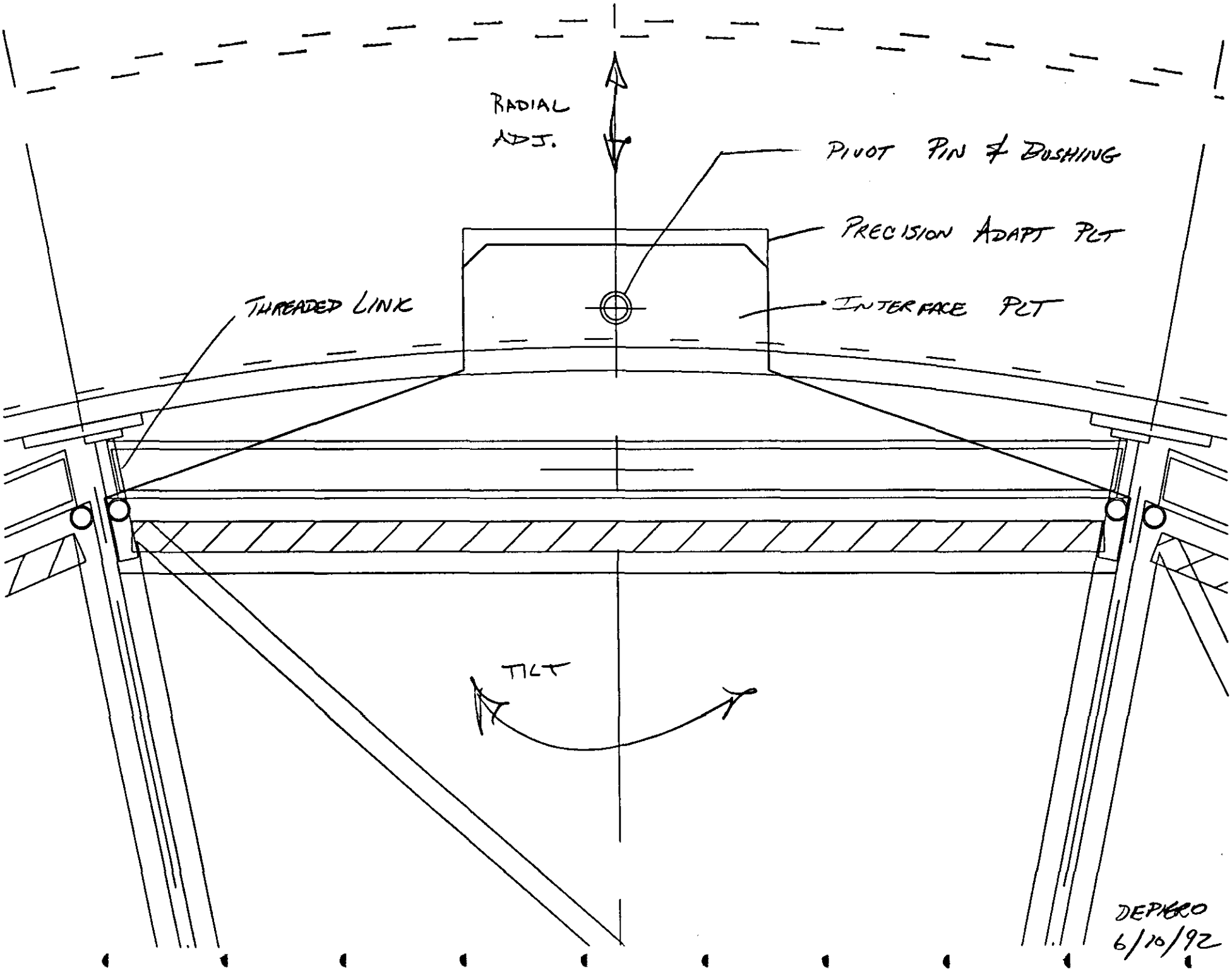
RADIAL
ADJ.
PIVOT PIN & BUSHING
PRECISION ADAPT PLT
THREADED LINK
INTERFACE PLT
TILT
DEPIERO
6/10/92

Marty Furey/Draper

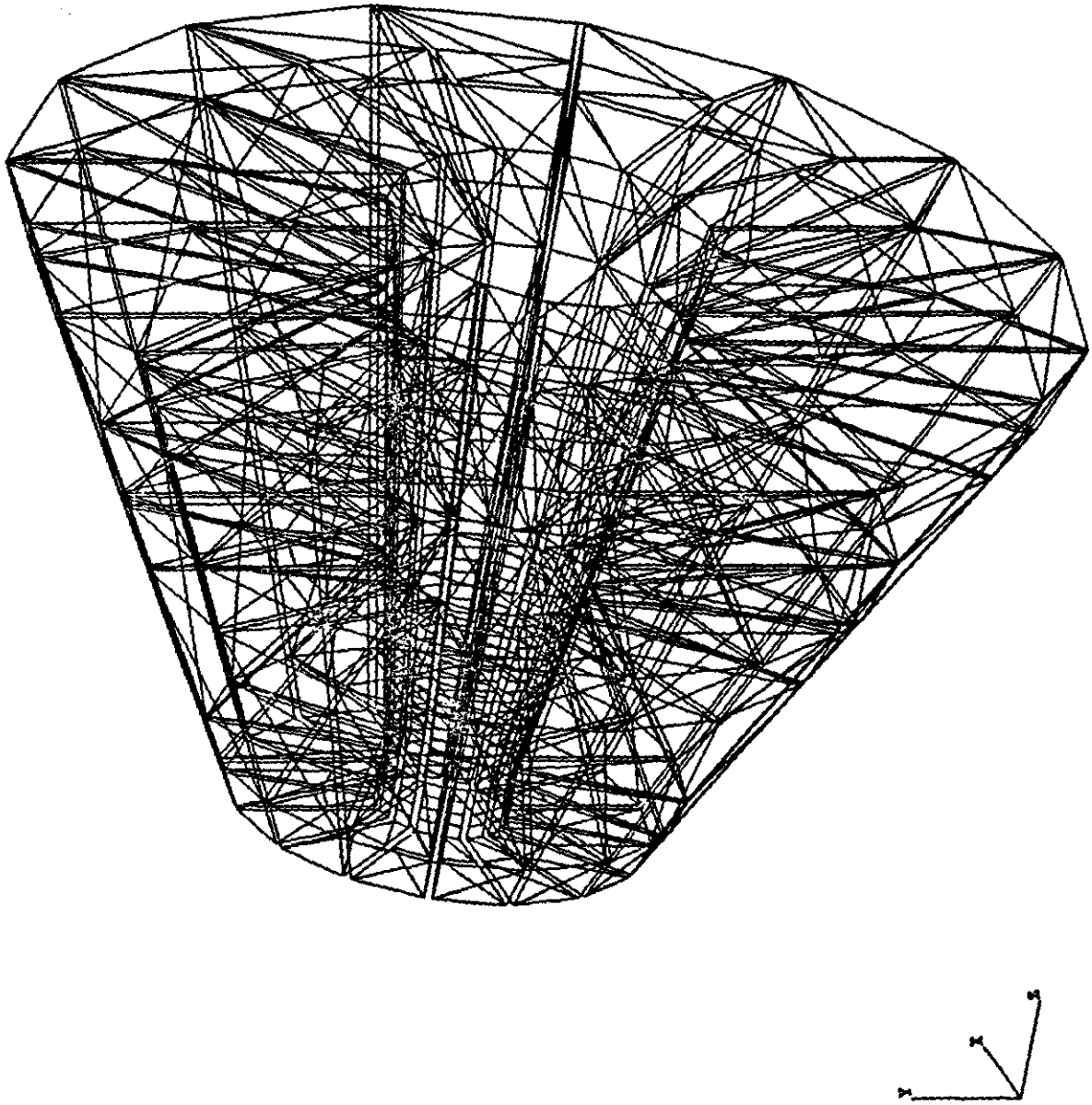

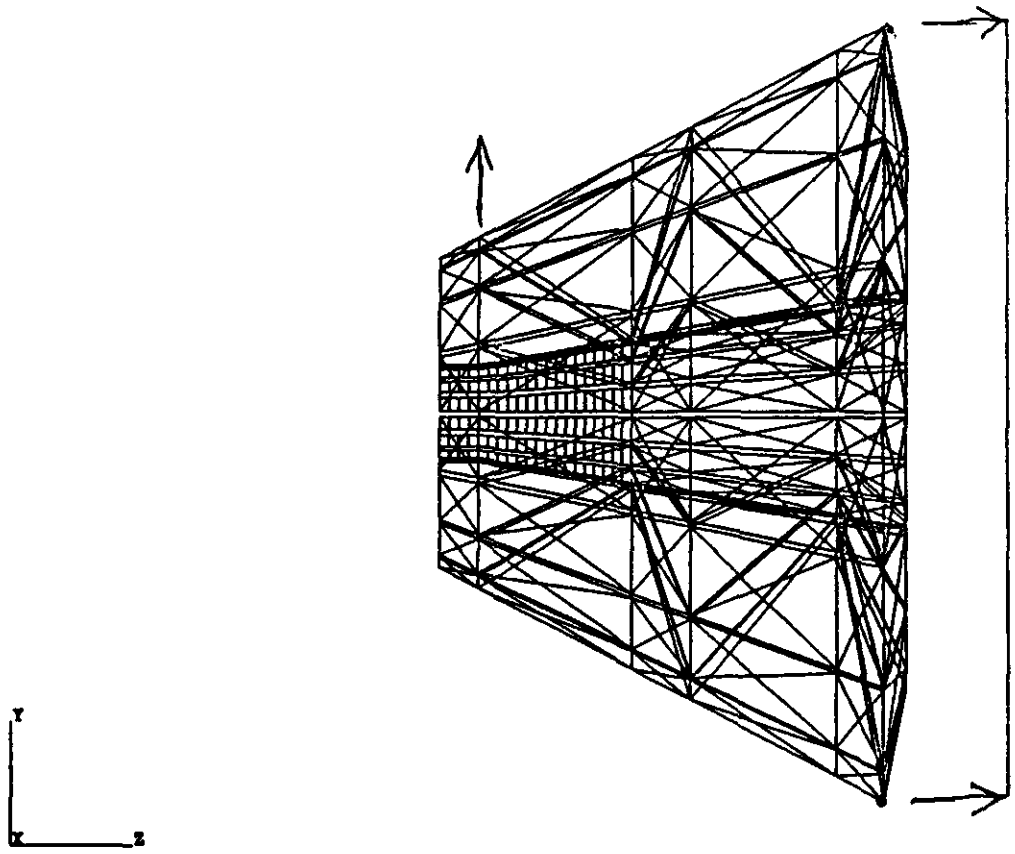

SSC END REGION ASSEMBLY, SUPPORT COND. 1
1 G LOAD IN THE -Y DIRECTION
1 G GRAVITY LOAD

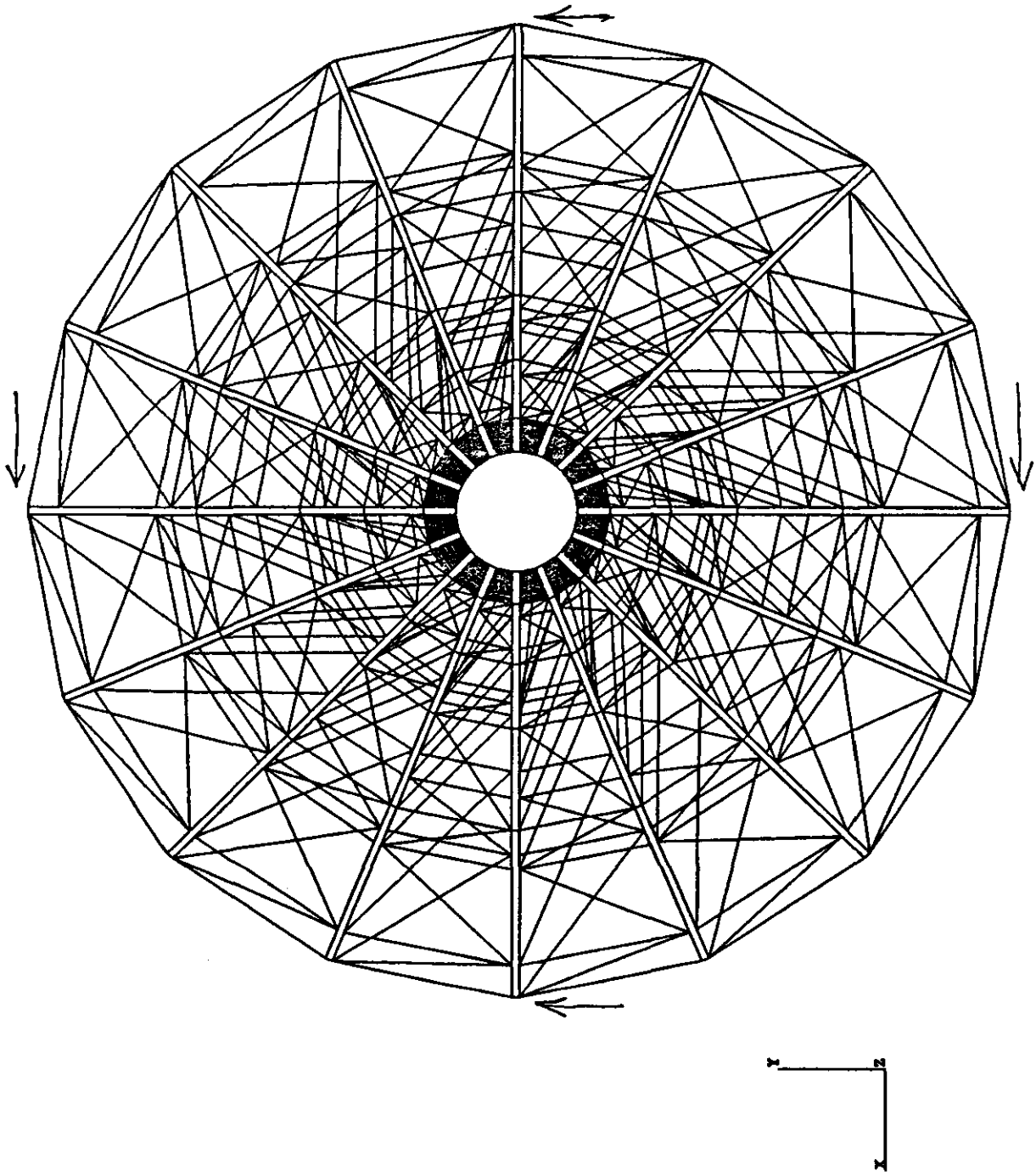
Y
Z
X

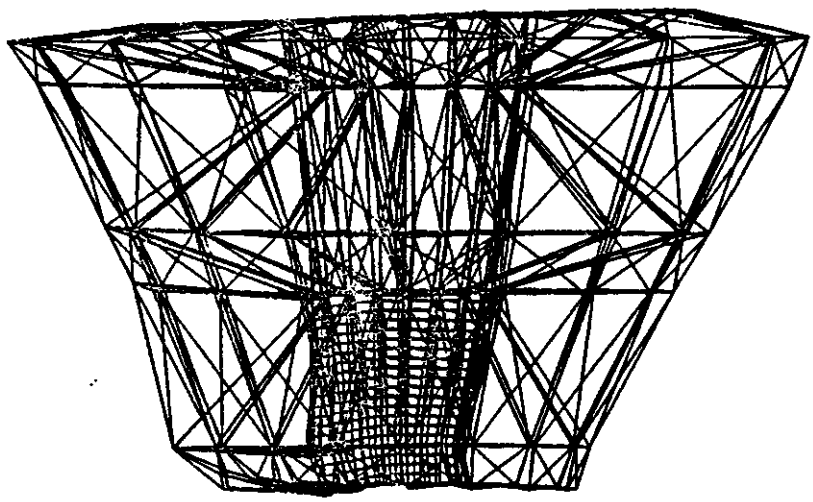

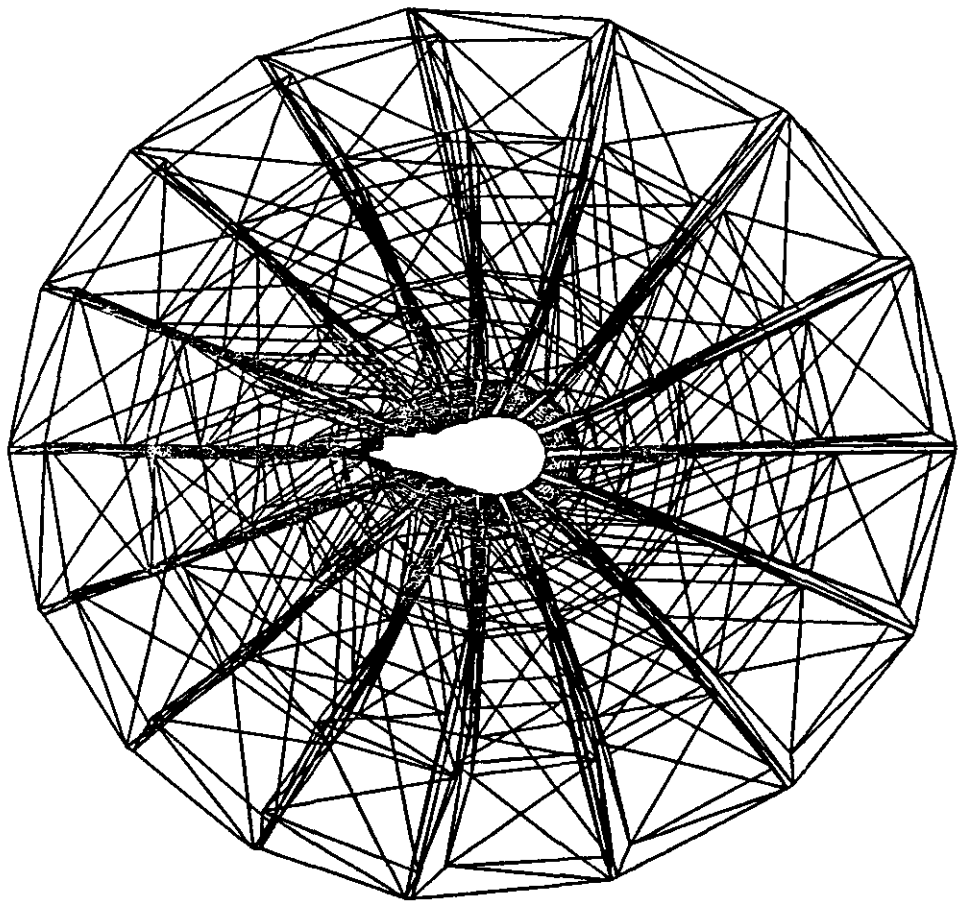

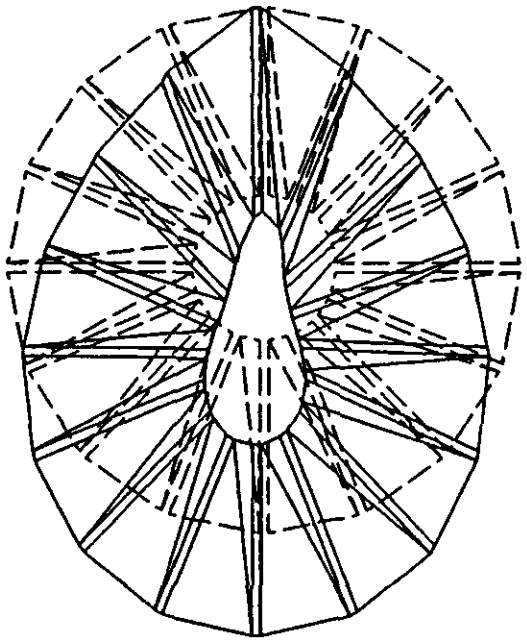

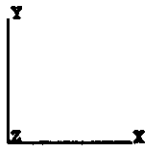

SSC END REGION ASSEMBLY, SUPPORT COND. 1
1 G LOAD IN THE -Y DIRECTION
1 G GRAVITY LOAD

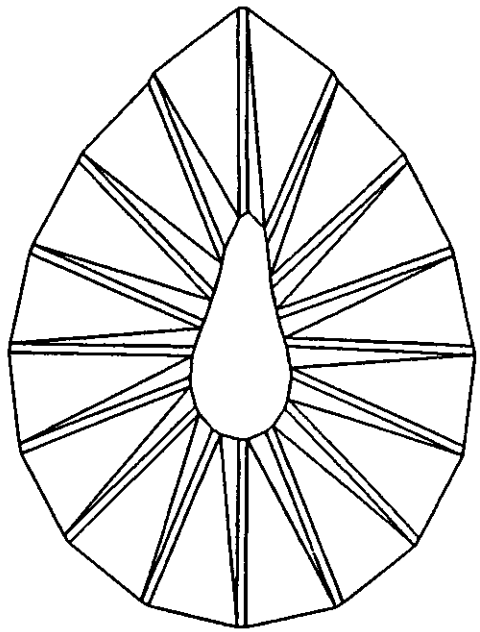

SSC END REGION ASSEMBLY, SUPPORT COND. 1
1 G LOAD IN THE -Y DIRECTION
1 G GRAVITY LOAD

Joe Paradiso

Requirement Spec: Barrel rθ

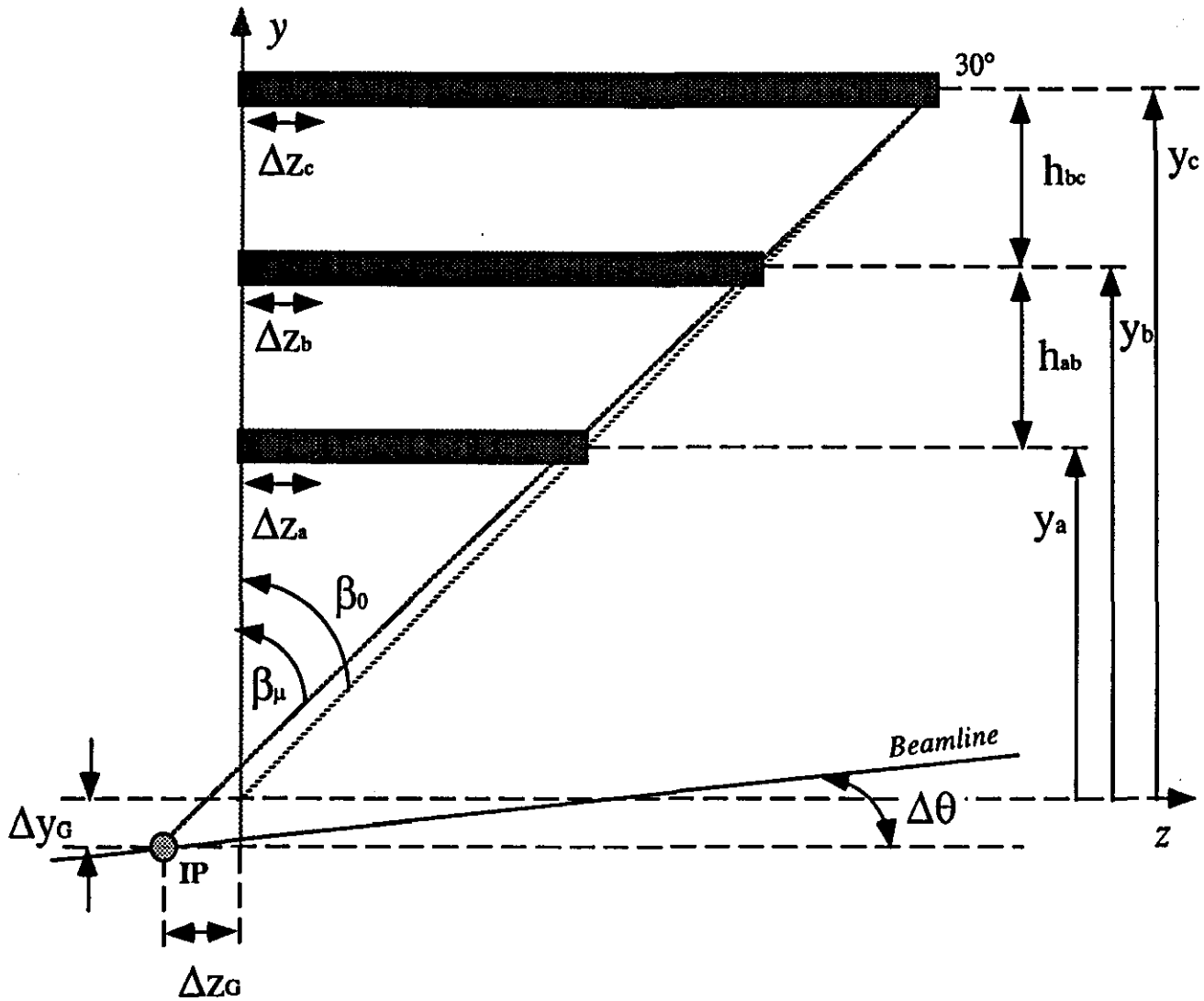

Requirement Spec: Barrel rϕ

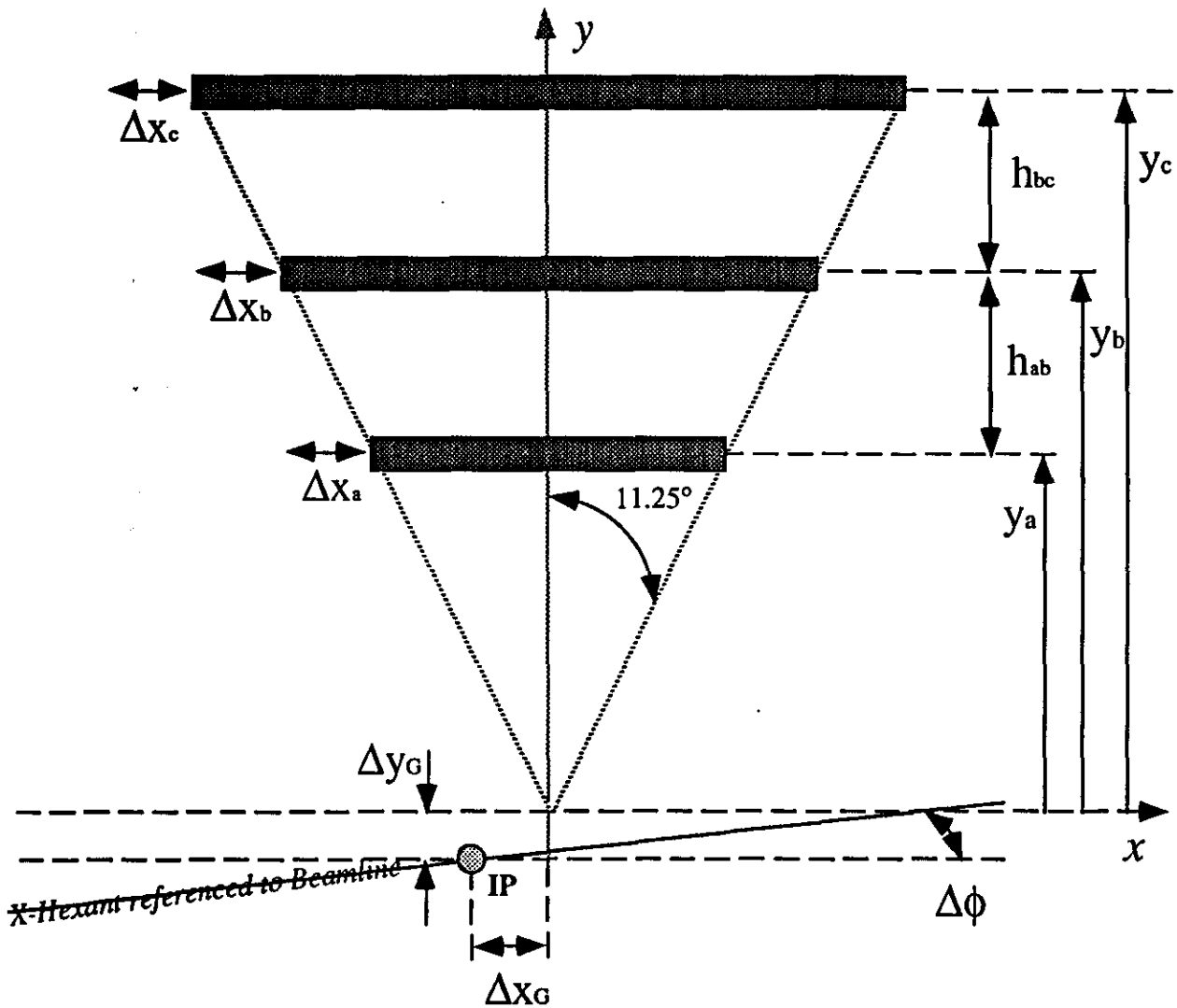

Requirement Spec: Endcaps rθ

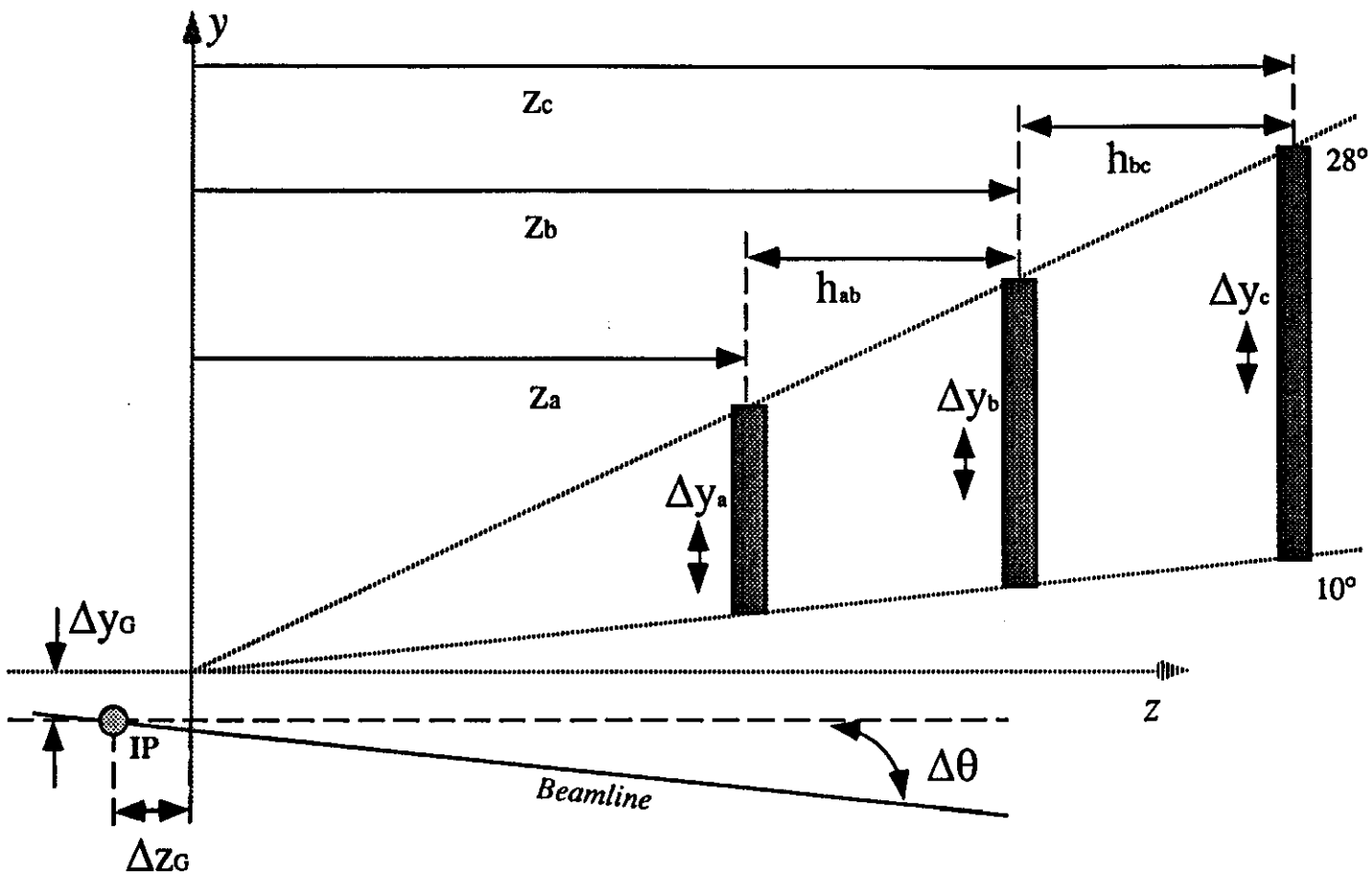

Requirement Spec: Endcaps rϕ

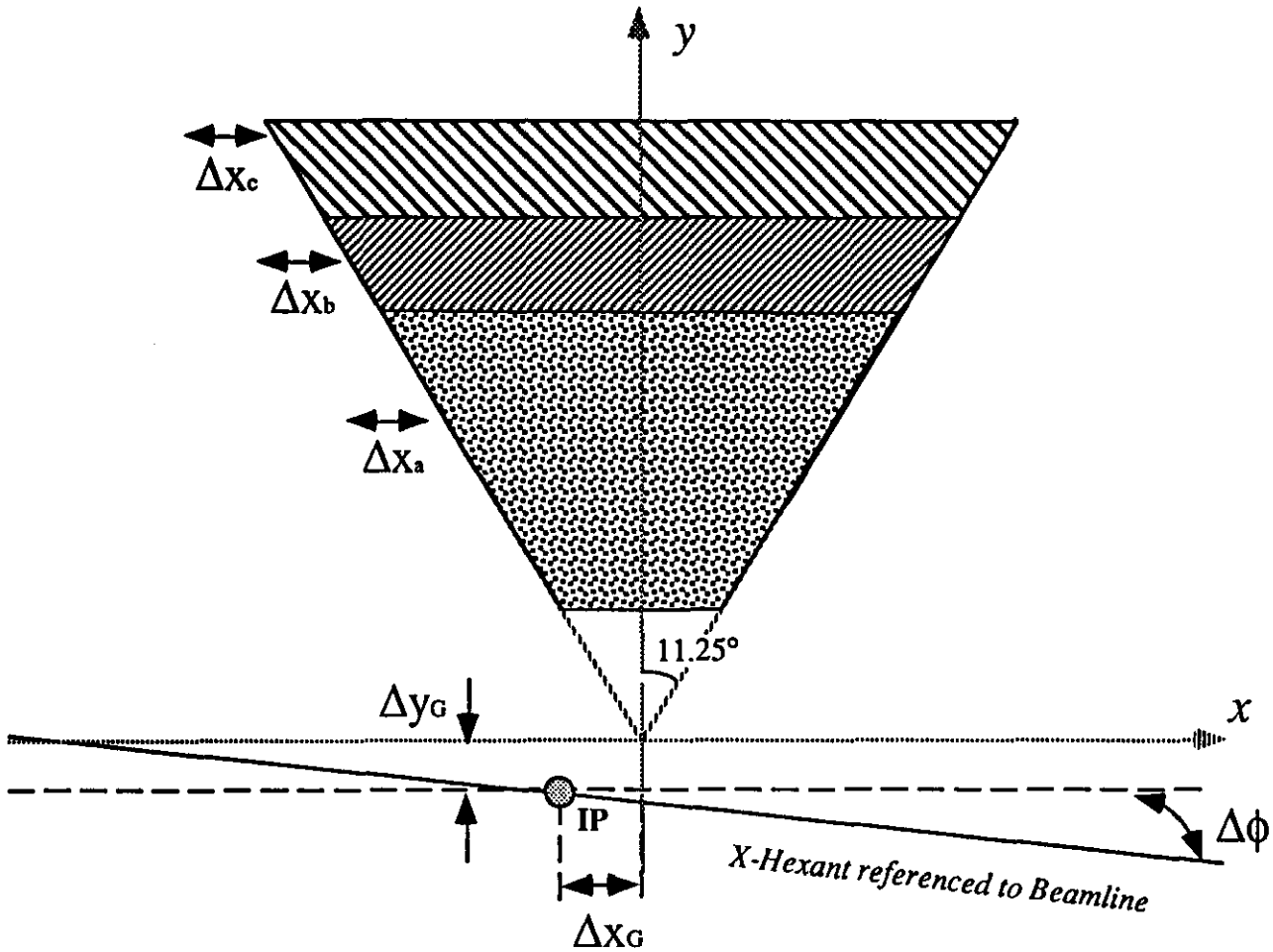

Alignment Requirements Analysis

Intrinsic Smears

- Vertex distribution along z ($\sigma = 7$ cm)
- Multiple scattering in calorimeter (2.5 m of Cu = 0.4 mr @ 500 GeV

Needed Structural Accuracy

- Dynamic range of local alignment system (assume ± 1 mm)
- Alignment of trigger roads (assume 10% of non-overlap allowed, bending roads = 2 strips wide

Precision Measurements

- Stated momentum precision in bending plane
- Align to precision of detector components (muon angle)
- Extrapolate $p_{\parallel}$ from measured angle (assuming additional 1% gives Δz, $\Delta y \approx 4$ cm)
- Mass Resolution (assuming angle contribution below $\sqrt{10}$ opening angle of 22.5° gives $\sigma_{\theta,\phi} = 3.2$ mr)

Pattern Recognition

- Muon tracking constraints (?)
- Track linking with central detector (request sent to tracker group)

Other Effects

- Line-of-sight deviation from IP: $s \approx 0.1 \sin\alpha\ \Delta y$ (mm in barrel)

Chart Up

Alignment Status

- List of requirements and formulae have been generated.

  - Tables, report now being prepared
  - Will go over with Sawicki, Gena, Vallery on Friday 12-June @ SSCL
  - Composite table (of worst-case numbers) will be entered into "global alignment" table.

- Will discuss alignment baseline scheme with above crew on 12-June.

  - Sawicki will have SWAT info, data.
  - Gena et. al. will want to discuss laser beacon??
    => Keep it a "working meeting"!!

- "TTR" fixtures for RASNIK's are now in the hands of a designer

- Just heard from CERN wire contingent:

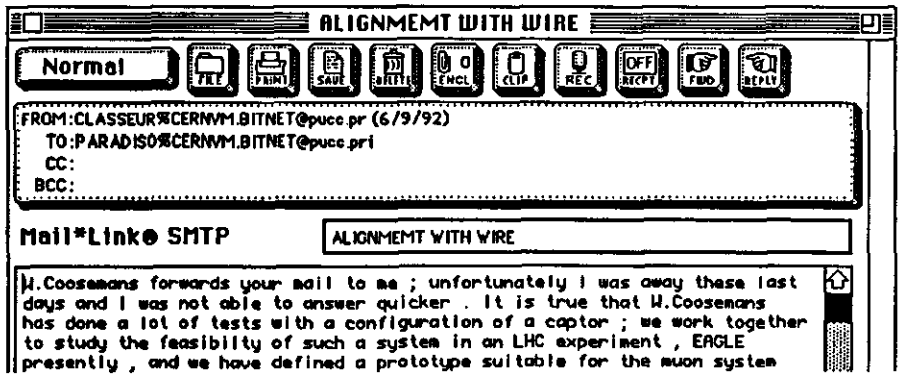

●●●

Near Future

- Perform/refine analysis of straightness monitor layout
  - Baseline designs for PAC!!
  - Endcaps, radial spacers must be better conceptualized
  - Bubble levels, etc.??

- Play with real RASNIK systems!!
  - Govingon has a setup downstairs (but no DAS!)
  - Measure sensitivity, noise for long paths; decide on lens width
  - Try to expand dynamic range
  - Examine CCD/Photodiode array

Dick Gustavson/Draper

G E M

Muon Subsystem Cost Matrix

9 June 1992

DRAPER LABORATORY

MUON SUBSYSTEM COST MATRIX Rev 10 8/10/92

		Engineering/Design			M&S	Inspection/Admin			Proc/Fab	Assembly				
		Labor	Rate	Total		Labor	Rate	Total	Material	Labor	Rate	Subtotal	Captl. Eqpt.	Tooling
WBS no.	Item	my	k$/my	k$	k$	my	k$/my	k$	k$	my	k$/my	k$	k$	k$
(-3.1)	PDT Muon Detector cost	121.6	116	14129	6115	101.4	109	11086	37405	272.2	62	16825	2391	1176
(-3.2)	LSDT Muon Detector cost	121.6	116	14129	6113	101.2	109	11052	32134	253.3	64	16086	2341	1226
					Sub-group 03.1 is used for all construction breakdown categories except those which ar									
03.1 - PDT	Muon Subsys. Construction PDT	97.92	112	10946	5061	101.44	109	11086	37405	272.23	62	16825	2391	1176
03.2 - LSDT	Muon Subsys. ConstructionLSDT	97.92	112	10946	5059	101.24	109	11052	32134	253.31	64	16086	2341	1226
03.1.1-PDT	Central Region	56.96	106	6065	2507	46.75	96	4501	22748	190.80	63	12028	1586	706
03.2.1-LSDT	Central Region	56.96	106	6065	2505	46.55	96	4467	17477	171.88	66	11288	1536	756
03.1.1.1	Central Region Installation	9.00	99	891	75	3.51	63	221	560					
03.1.1.1.1	On-Site	0.00		0	8	1.38		95	260					
03.1.1.1.1.1	Test				0	0.00		0	10					
03.1.1.1.1.2	Mechanical Assembly				3	0.50	69	35	75					
03.1.1.1.1.3	Electrical/Electronics Assy				2	0.38	69	26	75					
03.1.1.1.1.4	Fac Prep				3	0.50	69	35	100					
03.1.1.1.2	Off-Site	9.00		891	67	2.13		126	300					
03.1.1.1.2.1	Install. Tool Fnl Dsgn, Mach, Assy	9.00	99	891	67	2.13	59	126	300					
03.1.1.2	Central Region Sector Assy-PDT	15.82	105	1668	408	30.08	94	2822	10805	172.80	62	10728	1586	546
03.2.1.2	Central Region Sector AssyLSDT	15.82	105	1668	406	29.88	93	2788	6597	153.88	65	9988	1536	596
03.1.1.2.1	On-Site	0.00		0	9	1.44		99	175	12.83	47	602	375	200
03.1.1.2.1.1	Sector Storage			0	0	0.00		0	0			0		
03.1.1.2.1.2	Test			0	3	0.56	69	39	25	1.25	52	65	100	
03.1.1.2.1.3	Assembly			0	4	0.63	69	43	100	10.83	46	498	275	200
03.1.1.2.1.4	Fac Prep			0	2	0.25	69	17	50	0.75	52	39		
03.1.1.2.2	Off-Site	3.00		297	23	0.88		55	85	2.13		25	0	0
03.1.1.2.2.1	Assy Fixt Final Dsgn, Mach, Assy	3.00	99	297	23	0.88	63	55	85	2.13	55	25		
03.1.1.2.3	Pressurized Drift Tubes	3.25	102	332	86	9.49	95	904	8078	109.87	60	6596	300	55
03.1.1.2.3.1	Off-Site	3.25		332	86	9.49		904	8078	109.87		6596	300	55
03.1.1.2.3.1.1	Shipping				2	0.23	69	16	50	0.46	107	49		
03.1.1.2.3.1.2	Test				3	0.50	133	67	28	5.66	110	623		

MUON SUBSYSTEM COST MATRIX Rev 10 6/10/92

		Engineering/Design			M&S	Inspection/Admin			Proc/Fab	Assembly				
		Labor	Rate	Total		Labor	Rate	Total	Material	Labor	Rate	Subtotal	Captl. Eqpt.	Tooling
WBS no.	Item	my	k$/my	k$	k$	my	k$/my	k$	k$	my	k$/my	k$	k$	k$
03.1.1.2.3.1.3	Assembly				14	2.25	133	299	50	20.00	98	1960	300	55
03.1.1.2.3.1.4	Facility Prep				5	0.75	133	100	0	3.75	97	364		
03.1.1.2.3.1.5	Machining, Inspection				42	5.63	72	405	7950	80.00	45	3600		
03.1.1.2.3.1.6	Final Design, Drwg/Spec Mods	3.25	102	332	20	0.13	133	17						
0.3.2.1.2.3	Limited Streamer Drift Tubes	3.25	102	332	86	9.49	93	882	3663	92.00	64	5916	250	105
03.2.1.2.3.1	Off-Site	3.25		332	86	9.49		882	3663	92.00		5916	250	105
03.2.1.2.3.1.1	Shipping				2	0.23	69	16	50	0.46	107	49		
03.2.1.2.3.1.2	Test				3	0.50	133	67	28	5.66	110	623		
03.2.1.2.3.1.3	Assembly				14	2.25	133	299	50	20.00	98	1960	250	105
03.2.1.2.3.1.4	Facility Prep				5	0.75	133	100	0	3.75	97	364		
03.2.1.2.3.1.5	Machining, Inspection				42	5.63	68	383	3535	62.13	47	2920		
03.2.1.2.3.1.6	Final Design, Drwg/Spec Mods	3.25	102	332	20	0.13	133	17						
03.1.1.2.4	Realative Plate Counters	3.25	102	332	89	10.05	93	934	1491	32.67	78	2554	200	146
03.1.1.2.4.1	Off-Site	3.25		332	89	10.05		934	1491	32.67		2554	200	146
03.1.1.2.4.1.1	Shipping				2	0.23	133	31	50	0.46	107	49	0	
03.1.1.2.4.1.2	Test				3	0.50	133	67	0	5.50	109	600	50	
03.1.1.2.4.1.3	Assembly				14	2.25	133	299	50	4.16	113	470	150	100
03.1.1.2.4.1.4	Facility Prep				5	0.75	133	100	0	3.75	97	364		
03.1.1.2.4.1.5	Machining, Inspection				45	6.19	68	421	1391	18.80	57	1072	0	46
03.1.1.2.4.1.6	Final Design, Drwg/Spec Mods	3.25	102	332	20	0.13	133	17						
03.1.1.2.5	Sector Support Structures PDT	5.00	111	555	89	4.97	85	422	292	13.05	57	737	711	145
03.1.1.2.5.1	Off-Site	5.00		555	89	4.97		422	292	13.05		737	711	145
03.1.1.2.5.1.1	Shipping				2	0.25	69	17	20	0.50	44	22		
03.1.1.2.5.1.2	Machining, Inspection				48	3.97	75	298	272	12.55	57	715	711	145
03.1.1.2.5.1.3	Final Design, Drwg/Spec Mods	5.00	111	555	39	0.75	142	107	0	0	0	0		
03.2.1.2.5	Sector Support StructuresLSDT	5.00	111	555	87	4.77	86	410	259	12.00	56	678	711	145
03.2.1.2.5.1	Off-Site	5.00		555	87	4.77		410	259	12.00		678	711	145
03.2.1.2.5.1.1	Shipping				2	0.25	69	17	20	0.50	44	22		
03.2.1.2.5.1.2	Machining, Inspection				46	3.77	76	287	239	11.50	57	656	711	145
03.2.1.2.5.1.3	Final Design, Drwg/Spec Mods	5.00	111	555	39	0.75	142	107	0	0	0	0		
03.1.1.2.6	Alignment & Calibrtn Sys PDT	1.32	116	153	112	3.25	125	407	884	2.25	95	214	0	0
03.1.1.2.6.1	Local Chamber Alignment	0.66		77	52	1.63		204	534	1.00		95	0	0
03.1.1.2.6.1.1	Off-Site	0.66		77	52	1.63		204	534	1.00		95	0	0
03.1.1.2.6.1.1.1	Shipping				25	1.00	125	125		0.00	0	0		
03.1.1.2.6.1.1.2	Test				5	0.13	125	16		0.25	95	24		
03.1.1.2.6.1.1.3	Assembly				5	0.13	125	16		0.25	95	24		
03.1.1.2.6.1.1.4	Facility Prep				5	0.13	125	16	25	0.25	95	24		
03.1.1.2.6.1.1.5	Machining, Inspection				2	0.25	129	32	509	0.25	95	24	0	0
03.1.1.2.6.1.1.6	Final Design, Drwg/Spec Mods	0.66	116	77	10									

		Engineering/Design			M&S	Inspection/Admin			Proc/Fab	Assembly				
		Labor	Rate	Total		Labor	Rate	Total	Material	Labor	Rate	Subtotal	Captl. Eqpt.	Tooling
WBS no.	Item	my	k$/my	k$	k$	my	k$/my	k$	k$	my	k$/my	k$	k$	k$
03.2.1.2.6	Alignment & Calibrtn Sys LSDT	1	116	153	112	3	125	407	924	2	95	214	0	0
03.2.1.2.6.1	Local Chamber Alignment	0.66		77	52	1.63		204	774	1.00		95	0	0
03.2.1.2.6.1.1	Off-Site	0.66		77	52	1.63		204	774	1.00		95	0	0
03.2.1.2.6.1.1.1	Shipping				25	1.00	125	125		0.00	0	0		
03.2.1.2.6.1.1.2	Test				5	0.13	125	16		0.25	95	24		
03.2.1.2.6.1.1.3	Assembly				5	0.13	125	16		0.25	95	24		
03.2.1.2.6.1.1.4	Facility Prep				5	0.13	125	16	25	0.25	95	24		
03.2.1.2.6.1.1.5	Machining, Inspection				2	0.25	129	32	749	0.25	95	24	0	0
03.2.1.2.6.1.1.6	Final Design, Drwg/Spec Mods	0.66	116	77	10									
03.1.1.2.6.2	Global Sector/Region Monitor	0.66	116	77	60	1.63	125	203	150	1.25	95	119	0	0
03.1.1.2.6.2.1	Off-Site	0.66		77	60	1.63		203	150	1.25		119	0	0
03.1.1.2.6.2.1.1	Shipping				25	1.00	125	125		0.00	0	0		
03.1.1.2.6.2.1.2	Test				5	0.13	125	16		0.25	95	24		
03.1.1.2.6.2.1.3	Assembly				5	0.13	125	16		0.25	95	24		
03.1.1.2.6.2.1.4	Facility Prep				5	0.13	125	16	25	0.25	95	24		
03.1.1.2.6.2.1.5	Machining, Inspection				10	0.25	125	31	125	0.50	95	48		
03.1.1.2.6.2.1.6	Final Design, Drwg/Spec Mods	0.66	116	77	10									
03.1.1.3	Elctrnca/Elctr. Hrdwre - PDT	12.24	146	1785	1820	4.75	154	732	8903	2.00	95	190	0	0
03.2.1.3	Elctrnca/Elctr. Hrdwre - LSDT	12.24	146	1785	1820	4.75	154	732	7840	2.00	95	190	0	0
03.1.1.3.1	Pressurized Drift Tubes	6.46	150	970	1085	1.75	154	270	6611	0.00	0	0	0	0
03.1.1.3.1.1	Off-Site	6.46		970	1085	1.75		270	6611	0		0	0	0
03.1.1.3.1.1.1	Sense Electronics / Triggers	5.80	154	893	650	0.75	154	116	6053					
03.1.1.3.1.1.2	Calibration Electronics Des, Fab, Ship	0.66	116	77	15	0.50	154	77	250					
03.1.1.3.1.1.3	High / Low Voltage Systems	0.00	154	0	420	0.50	154	77	308					
03.2.1.3.1	Limited Streamer Drift Tubes	6.46	150	970	1085	1.75	154	270	5548	0.00	0	0	0	0
03.2.1.3.1.1	Off-Site	6.46		970	1085	1.75		270	5548	0		0	0	0
03.2.1.3.1.1.1	Sense Electronics / Triggers	5.80	154	893	650	0.75	154	116	5053					
03.2.1.3.1.1.2	Calibration Electronics Des, Fab, Ship	0.66	116	77	15	0.50	154	77	250					
03.2.1.3.1.1.3	High / Low Voltage Systems	0.00	154	0	420	0.50	154	77	245					
03.1.1.3.2	Resistive Plate Counters	4.46	148	662	460	2.00	154	308	2092					
03.1.1.3.2.1	Off-Site	4.46		662	460	2.00		308	2092					
03.1.1.3.2.1.1	Beam Crossing / Triggers	3.80	154	585	420	1.00	154	154	1741					
03.1.1.3.2.1.2	Calibration Electronics Des, Fab, Ship	0.66	116	77	25	0.50	154	77	250					
03.1.1.3.2.1.3	High / Low Voltage Systems	0.00	154	0	15	0.50	154	77	101					
03.1.1.3.3	Align and Cal System Elec	1.32	116	153	75	1.00	154	154	200	2.00	95	190	0	0
03.1.1.3.3.1	Local Chamber Alignment	0.66		77	35	0.50		77	100	1.00		95	0	0

MUON SUBSYSTEM COST MATRIX Rev 10 6/10/92

		Engineering/Design			M&S	Inspection/Admin			Proc/Fab	Assembly				
		Labor	Rate	Total		Labor	Rate	Total	Material	Labor	Rate	Subtotal	Captl. Eqpt.	Tooling
WBS no.	Item	my	k$/my	k$	k$	my	k$/my	k$	k$	my	k$/my	k$	k$	k$
03.1.1.3.3.1.1	Off-Site Assembly, Test				25	0.50	154	77	100	1.00	95	95		
03.1.1.3.3.1.2	Final Design, Drwg/Spec Mods	0.66	116	77	10									
03.1.1.3.3.2	Global Sector/Region Monitor	0.66	116	77	40	0.50	154	77	100	1.00	95	95	0	0
03.1.1.3.3.2.1	Off-Site Assembly, Test				25	0.50	154	77	100	1.00	95	95		
03.1.1.3.3.2.2	Final Design, Drwg/Spec Mods	0.66	116	77	15									
03.1.1.4	Gas Systems - PDT	15.90	79	1257	334	7.16	80	570	2080	10.00	54	540	0	160
03.2.1.4	Gas Systems - LSDT	15.90	79	1257	334	7.16	80	570	2080	10.00	54	540	0	160
03.1.1.4.1	Pressurized Drift Tubes	7.95	79	629	167	3.58	80	285	1040	5.00	54	270	0	80
03.1.1.4.1.1	Off-Site	2.30	130	299	52	0.46	180	83	0	0.00	0	0	0	0
03.1.1.4.1.1.1	Design and Development	2.30	130	299	52	0.46	180	83	0	0.00		0		
03.1.1.4.1.2	On-Site	5.65	58	330	115	3.12	65	202	1040	5.00	54	270	0	80
03.1.1.4.1.2.1	Design and drawings	4.03	58	234	68	0.81	73	59	0	0.00		0		
03.1.1.4.1.2.2	Test Procedure development	0.46	57	26	8	0.12	73	9	0	0.00		0		
03.1.1.4.1.2.3	Safety Procedure development	0.58	60	35	10	0.12	73	9	0	0.00		0		
03.1.1.4.1.2.4	Maintenance Procedure development	0.58	60	35	10	0.12	73	9	0	0.00		0		
03.1.1.4.1.2.5	Assembly and Test	0.00		0	9	0.92	54	50	0	5.00	54	270		20
03.1.1.4.1.2.6	Procurement - Surface System	0.00		0	4	0.40	66	26	415	0.00		0		30
03.1.1.4.1.2.7	Procurement - Hall System	0.00		0	6	0.63	65	41	625	0.00		0		30
03.2.1.4.1	Limited Streamer Drift Tubes	7.95	79	629	167	3.58	80	285	1040	5.00	54	270	0	80
03.2.1.4.1.1	Off-Site	2.30	130	299	52	0.46	180	83	0	0.00	0	0	0	0
03.2.1.4.1.1.1	Design and Development	2.30	130	299	52	0.46	180	83	0	0.00	0	0		
03.2.1.4.1.2	On-Site	5.65	235	330	115	3.12	65	202	1040	5.00	54	270	0	80
03.2.1.4.1.2.1	Design and drawings	4.03	58	234	68	0.81	73	59	0	0.00	0	0		
03.2.1.4.1.2.2	Test Procedure development	0.46	57	26	8	0.12	73	9	0	0.00	0	0		
03.2.1.4.1.2.3	Safety Procedure development	0.58	60	35	10	0.12	73	9	0	0.00	0	0		
03.2.1.4.1.2.4	Maintenance Procedure development	0.58	60	35	10	0.12	73	9	0	0.00	0	0		
03.2.1.4.1.2.5	Assembly and Test	0.00		0	9	0.92	54	50	0	5.00	54	270		20
03.2.1.4.1.2.6	Procurement - Surface System	0.00		0	4	0.40	66	26	415	0.00		0		30
03.2.1.4.1.2.7	Procurement - Hall System	0.00		0	6	0.63	65	41	625	0.00		0		30
03.1.1.4.2	Resistive Plate Counters	7.95	79	629	167	3.58	80	285	1040	5.00	54	270	0	80
03.1.1.4.2.1	Off-Site	2.30	130	299	52	0.46	180	83	0	0.00	0	0	0	0
03.1.1.4.2.1.1	Design and Development	2.30	130	299	52	0.46	180	83	0	0.00	0	0		
03.1.1.4.2.2	On-Site	5.65	58	330	115	3.12	65	202	1040	5.00	54	270	0	80
03.1.1.4.2.2.1	Design and drawings	4.03	58	234	68	0.81	73	59	0	0.00	0	0		
03.1.1.4.2.2.2	Test Procedure development	0.46	57	26	8	0.12	73	9	0	0.00	0	0		
03.1.1.4.2.2.3	Safety Procedure development	0.58	60	35	10	0.12	73	9	0	0.00	0	0		
03.1.1.4.2.2.4	Maintenance Procedure development	0.58	60	35	10	0.12	73	9	0	0.00	0	0		
03.1.1.4.2.2.5	Assembly and Test	0.00		0	9	0.92	54	50	0	5.00	54	270		20

		Engineering/Design			M&S	Inspection/Admin			Proc/Fab	Assembly				
		Labor	Rate	Total		Labor	Rate	Total	Material	Labor	Rate	Subtotal	Captl. Eqpt.	Tooling
WBS no.	Item	my	k$/my	k$	k$	my	k$/my	k$	k$	my	k$/my	k$	k$	k$
03.1.1.4.2.2.6	Procurement - Surface System	0.00		0	4	0.40	66	26	415	0.00		0		30
03.1.1.4.2.2.7	Procurement - Hall System	0.00		0	6	0.63	65	41	625	0.00		0		30
03.1.1.5	**Cooling Systems - PDT**	**4.00**	**116**	**464**	**70**	**1.25**	**126**	**156**	**400**	**6.00**	**95**	**570**	**0**	**0**
03.2.1.5	**Cooling Systems - LSDT**	**4.00**	**116**	**464**	**70**	**1.25**	**125**	**156**	**400**	**6.00**	**95**	**570**	**0**	**0**
03.1.1.5.1	**Pressurized Drift Tubes**	**2.00**	**116**	**232**	**35**	**0.63**	**125**	**78**	**200**	**3.00**	**95**	**285**	**0**	**0**
03.1.1.5.1.1	**Off-Site**	**2.00**		**232**	**35**	**0.63**		**78**	**200**	**3.00**		**285**	**0**	**0**
03.1.1.5.1.1.1	Shipping				5	0.13	125	16		0.25	95	24		
03.1.1.5.1.1.2	Subassembly, Test				5	0.13	125	16		1.00	95	95		
03.1.1.5.1.1.3	Machining, Inspection				5	0.13	125	16		1.00	95	95		
03.1.1.5.1.1.4	Procurement				5	0.13	125	16	200	0.75	95	71		
03.1.1.5.1.1.5	Final Design, Drwg/Spec Mods	2.00	116	232	15	0.13	125	16						
03.2.1.5.1	**Limited Streamer Drift Tubes**	**2.00**	**116**	**232**	**35**	**0.63**	**125**	**78**	**200**	**3.00**	**95**	**285**	**0**	**0**
03.2.1.5.1.1	**Off-Site**	**2.00**		**232**	**35**	**0.63**		**78**	**200**	**3.00**		**285**	**0**	**0**
03.2.1.5.1.1.1	Shipping				5	0.13	125	16		0.25	95	24		
03.2.1.5.1.1.2	Subassembly, Test				5	0.13	125	16		1.00	95	95		
03.2.1.5.1.1.3	Machining, Inspection				5	0.13	125	16		1.00	95	95		
03.2.1.5.1.1.4	Procurement				5	0.13	125	16	200	0.75	95	71		
03.2.1.5.1.1.5	Final Design, Drwg/Spec Mods	2.00	116	232	15	0.13	125	16						
03.1.1.5.2	**Resistive Plate Counters**	**2.00**	**116**	**232**	**35**	**0.63**	**125**	**78**	**200**	**3.00**	**95**	**285**	**0**	**0**
03.1.1.5.2.1	**Off-Site**	**2.00**		**232**	**35**	**0.63**	**154**	**78**	**200**	**3.00**	**95**	**285**	**0**	**0**
03.1.1.5.2.1.1	Shipping				5	0.13	125	16		0.25	95	24		
03.1.1.5.2.1.2	Subassembly, Test				5	0.13	125	16		1.00	95	95		
03.1.1.5.2.1.3	Machining, Inspection				5	0.13	125	16		1.00	95	95		
03.1.1.5.2.1.4	Procurement				5	0.13	125	16	200	0.75	95	71		
03.1.1.5.2.1.5	Final Design, Drwg/Spec Mods	2.00	116	232	15	0.13	125	16						
03.1.2	**End Cap Region**	**40.96**	**119**	**4881**	**2119**	**33.29**	**99**	**3289**	**14657**	**81.43**	**59**	**4797**	**805**	**470**
03.1.2.1	**End Cap Region Installation**	**3.00**	**99**	**297**	**36**	**2.87**	**63**	**182**	**311**					
03.1.2.1.1	**On-Site**	**0.00**		**0**	**8**	**1.24**		**86**	**161**					
03.1.2.1.1.1	Test				2	0.33	69	23	37					
03.1.2.1.1.2	Mechanical Assembly				2	0.33	69	23	37					
03.1.2.1.1.3	Electrical/Electronics Assembly				2	0.33	69	23	37					
03.1.2.1.1.4	Fac Prep				2	0.25	69	17	50					
03.1.2.1.2	**Off-Site**	**3.00**		**297**	**28**	**1.63**		**96**	**150**					
03.1.2.1.2.1	Install. Tool Final Dsgn, Mach, Assy	3.00	99	297	28	1.63	59	96	150					

MUON SUBSYSTEM COST MATRIX Rev 10 6/10/92

		Engineering/Design			M&S	Inspection/Admin			Proc/Fab	Assembly				
		Labor	Rate	Total		Labor	Rate	Total	Material	Labor	Rate	Subtotal	Captl. Eqpt.	Tooling
WBS no.	Item	my	k$/my	k$	k$	my	k$/my	k$	k$	my	k$/my	k$	k$	k$
03.1.2.2	End Cap Region Sector Assy	12.57	107	1341	332	22.58	100	2260	4734	70.93	56	3989	780	365
03.1.2.2.1	On-Site	0.00		0	9	1.44		99	175	10.33	16	160	375	200
03.1.2.2.1.1	Sector Storage					0.00		0	0			0		
03.1.2.2.1.2	Test				3	0.56	69	39	25	1.25	52	53	100	
03.1.2.2.1.3	Assembly				4	0.63	69	43	100	8.33	46	54	275	200
03.1.2.2.1.4	Facility Prep				2	0.25	69	17	50	0.75	52	53		
03.1.2.2.2	Off-Site	3.00		297	23	0.88		55	10	2.13	69	147	0	75
03.1.2.2.2.1	Assy Fixt Fnl Dsgn, Mach, Assy	3.00	99	297	23	0.88	63	55	10	2.13	69	147		75
03.1.2.2.3	Cathode Strip Chambers	3.25	102	332	86	9.49	91	864	3353	49.87	62	3116	42	0
03.1.2.2.3.1	Off-Site	3.25		332	86	9.49		864	3353	49.87		3116	42	0
03.1.2.2.3.1.1	Shipping				2	0.23	69	16	50	0.46	107	49		
03.1.2.2.3.1.2	Test				3	0.50	133	67	0	5.66	110	623	28	
03.1.2.2.3.1.3	Assembly				14	2.25	133	299	24	20.00	47	940	14	
03.1.2.2.3.1.4	Facility Prep				5	0.75	133	100	0	3.75	97	364		
03.1.2.2.3.1.5	Machining, Inspection				42	5.63	68	383	3279	20.00	57	1140		
03.1.2.2.3.1.6	Final Design, Drwg/Spec Mods	3.25	102	332	20	0.13	133							
03.1.2.2.4	Sector Support Structures	5.00	111	555	140	7.02	109	768	84	6.60	57	376	363	90
03.1.2.2.4.1	Off-Site	5.00		555	140	7.02		768	84	6.60		376	363	90
03.1.2.2.4.1.1	Shipping				25	1.00	125	125	0	0.00	0	0		
03.1.2.2.4.1.2	Test				15	1.00	125	125				0		
03.1.2.2.4.1.3	Assembly				15	1.00	125	125	0			0		
03.1.2.2.4.1.4	Facility Prep				10	0.50	125	63				0		
03.1.2.2.4.1.5	Machining, Inspection				36	2.77	81	224	84	6.60	57	376	363	90
03.1.2.2.4.1.6	Final Design, Drwg/Spec Mods	5.00	111	555	39	0.75	142	106.5				0		
03.1.2.2.5	Alignment & Calibration Sys	1.32	119	157	74	3.75	126	473	1112	2.00	95	190	0	0
03.1.2.2.5.1	Local Chamber Alignment	0.66		79	37	1.88		236	556	1.00		95	0	0
03.1.2.2.5.1.1	Off-Site	0.66		79	37	1.88		236	556	1.00		95	0	0
03.1.2.2.5.1.1.1	Shipping				25	1.00	125	125		0.00	0	0		
03.1.2.2.5.1.1.2	Test				2	0.13	125	16		0.25	95	24		
03.1.2.2.5.1.1.3	Assembly				2	0.13	125	16		0.25	95	24		
03.1.2.2.5.1.1.4	Facility Prep				2	0.13	125	16	25	0.25	95	24		
03.1.2.2.5.1.1.5	Machining, Inspection				2	0.25	129	32	531	0.25	95	24		
03.1.2.2.5.1.1.6	Final Design, Drwg/Spec Mods	0.66	119	79	4	0.25	129	32						
03.1.2.2.5.2	Global Sector/Region Monitor	0.66	119	79	37	1.88	126	236	556	1.00	0	95	0	0
03.1.2.2.5.2.1	Off-Site	0.66		79	37	1.88		236	556	1.00		95	0	0
03.1.2.2.5.2.1.1	Shipping				25	1.00	125	125		0.00	0	0		
03.1.2.2.5.2.1.2	Test				2	0.13	125	16		0.25	95	24		

MUON SUBSYSTEM COST MATRIX Rev 10 6/10/92

		Engineering/Design			M&S	Inspection/Admin			Proc/Fab	Assembly				
		Labor	Rate	Total		Labor	Rate	Total	Material	Labor	Rate	Subtotal	Captl. Eqpt.	Tooling
WBS no.	Item	my	k$/my	k$	k$	my	k$/my	k$	k$	my	k$/my	k$	k$	k$
03.1.2.2.5.2.1.3	Assembly				2	0.13	125	16		0.25	95	24		
03.1.2.2.5.2.1.4	Facility Prep				2	0.13	125	16	25	0.25	95	24		
03.1.2.2.5.2.1.5	Machining, Inspection				2	0.25	129	32	531	0.25	95	24		
03.1.2.2.5.2.1.6	Final Design, Drwg/Spec Mods	0.66	119	79	4	0.25	129	32						
03.1.2.3	**Electronics/Electronics Hardware**	**16.78**	**151**	**2536**	**1552**	**1.00**	**142**	**142**	**8122**	**1.25**	**95**	**119**	**0**	**0**
03.1.2.3.1	**Cathode Strip Chambers**	**15.46**	**154**	**2381**	**1535**	**0.00**	**0**	**0**	**7491**	**0.00**		**0**	**0**	**0**
03.1.2.3.1.1	**Off-Site**	**15.46**		**2381**	**1535**	**0.00**	**0**	**0**	**7491**	**0.00**		**0**	**0**	**0**
03.1.2.3.1.1.1	Sense Electronics Design, Fab, Ship	7.00	154	1078	700				5082					
03.1.2.3.1.1.2	Triggering Electronics Des, Fab, Ship	5.50	154	847	440				1637					
03.1.2.3.1.1.3	Beam Crossing Electronics Des, Fab, Sh	2.30	154	354	390				347					
03.1.2.3.1.1.4	Calibration Electronics Des, Fab, Ship	0.66	154	102	5				100					
03.1.2.3.1.1.5	High-Voltage Systems Des, Fab, Ship	0.00	154	0	0				325					
03.1.2.3.2	**Align and Cal System Elec**	**1.32**	**118**	**155**	**17**	**1.00**	**142**	**142**	**631**	**1.25**	**95**	**119**	**0**	**0**
03.1.2.3.2.1	**Local Chamber Alignment**	**0.66**		**77**	**6**	**0.25**		**32**	**531**	**0.25**		**24**	**0**	**0**
03.1.2.3.2.1.1	Off-Site Assembly/Test				2	0.25	129	32	531	0.25	95	24	0	0
03.1.2.3.2.1.2	Final Design, Drwg/Spec Mods	0.66	116	77	4									
03.1.2.3.2.2	**Global Sector/Region Monitor**	**0.66**	**119**	**79**	**11**	**0.75**	**146**	**109**	**100**	**1.00**	**95**	**95**	**0**	**0**
03.1.2.3.2.2.1	Off-Site Assembly/Test				7	0.50	154	77	100	1.00	95	95		
03.1.2.3.2.2.2	Final Design, Drwg/Spec Mods	0.66	119	79	4	0.25	129	32						
03.1.2.4	**Gas System**	**7.95**	**79**	**629**	**167**	**3.58**	**80**	**285**	**1040**	**5.00**	**54**	**270**	**0**	**80**
03.1.2.4.1	**Cathode Strip Chambers**	**7.95**	**79**	**629**	**167**	**3.58**	**80**	**285**	**1040**	**5.00**	**54**	**270**	**0**	**80**
03.1.2.4.1.1	**Off-Site**	**2.30**	**130**	**299**	**52**	**0.46**	**180**	**83**	**0**	**0.00**	**0**	**0**	**0**	**0**
03.1.2.4.1.1.1	Design and Development	2.30	130	299	52	0.46	180	83	0	0.00	0	0		
03.1.2.4.1.2	**On-Site**	**5.65**	**58**	**330**	**115**	**3.12**	**65**	**202**	**1040**	**5.00**	**54**	**270**	**0**	**80**
03.1.2.4.1.2.1	Design and drawings	4.03	58	234	68	0.81	73	59	0	0.00	0	0		
03.1.2.4.1.2.2	Test Procedure development	0.46	57	26	8	0.12	73	9	0	0.00	0	0		
03.1.2.4.1.2.3	Safety Procedure development	0.58	60	35	10	0.12	73	9	0	0.00	0	0		
03.1.2.4.1.2.4	Maintenance Procedure development	0.58	60	35	10	0.12	73	9	0	0.00	0	0		
03.1.2.4.1.2.5	Assembly and Test	0.00		0	9	0.92	54	50	0	5.00	54	270		20
03.1.2.4.1.2.6	Procurement - Surface System	0.00		0	4	0.40	66	26	415	0.00		0		30
03.1.2.4.1.2.7	Procurement - Hall System	0.00		0	6	0.63	65	41	625	0.00		0		30
03.1.2.5	**Cooling System**	**0.66**	**119**	**79**	**32**	**3.26**	**129**	**420**	**450**	**4.25**	**99**	**420**	**25**	**25**
03.1.2.5.1	**Cathode Strip Chambers**	**0.66**	**119**	**79**	**32**	**3.26**	**129**	**420**	**450**	**4.25**	**99**	**420**	**25**	**25**
03.1.2.5.1.1	**Off-Site**	**0.66**		**79**	**32**	**3.26**		**420**	**450**	**4.25**		**420**	**25**	**25**
03.1.2.5.1.1.1	Shipping				7	0.13	125	16	0	0.00	95	0		
03.1.2.5.1.1.2	Subassembly, Test				11	1.50	133	200	100	1.75	104	182	25	25

MUON SUBSYSTEM COST MATRIX Rev 10 6/10/92

		Engineering/Design			M&S	Inspection/Admin			Proc/Fab	Assembly				
		Labor	Rate	Total		Labor	Rate	Total	Material	Labor	Rate	Subtotal	Captl. Eqpt.	Tooling
WBS no.	Item	my	k$/my	k$	k$	my	k$/my	k$	k$	my	k$/my	k$	k$	k$
03.1.2.5.1.1.3	Machining, Inspection				5	1.50	126	189	150	1.75	95	166		
03.1.2.5.1.1.4	Procurement				5	0.13	125	16	200	0.75	95	71		
03.1.2.5.1.1.5	Final Design, Drwg/Spec Mods	0.66	119	79	4	0.00		0				0		
03.1.3	**Subsystem Project Mgmt.**				**435**	**21.40**	**154**	**3296**						
03.1.3.1	Administration/Oversight				150	9.50	154	1463						
03.1.3.2	Resource Management				45	1.19	154	183						
03.1.3.3	ES&H Assurance				90	2.38	154	367						
03.1.3.4	Quality Assurance Program				90	3.57	154	550						
03.1.3.5	Systems Integration				30	2.38	154	367						
03.1.3.6	Subsystem Cost/Schedule Monitor				30	2.38	154	367						
13	**Muon Subsystem R&D**	**11.63**	**154**	**1791**	**754**									
13.1	CSC Subgroup	2.64	154	407	220									
13.2	LSDT Subgroup	3.13	154	482	144									
13.3	PDT Subgroup	1.94	154	299	203									
13.4	RPC Subgroup	1.48	154	228	148									
13.5	TTR Subgroup	2.00	154	308	6									
13.6	SCARF Subgroup	0.44	154	68	33									
23	**ENG Sbgrp Concept Des, TP Prep**	**12.00**	**116**	**1392**	**300**									

		Installation							Totals								
Material	Total	Labor	Rate	Subtotal	Captl. Eqpt.	Tooling	Material	Total	Labor	Material	Captl. Eqpt.	Tooling	Subtotal	Contingency		Total	Last
k$	k$	my	k$/my	k$	k$	k$	k$	k$	k$	k$	k$	k$	k$	Rate	Amount, k$	k$	modified
1470	21862	41.2	53	2168	2185	1625	248	6226	44207	45238	4576	2801	96822	34%	32848	129670	10-Jun-92
1510	21163	41.2	53	2168	2185	1625	248	6226	43434	40005	4526	2851	90816	34%	30610	121426	10-Jun-92
• specifically LSDT (03.2).																	
1470	21862	41.15	53	2168	2185	1625	248	6226	41024	44184	4576	2801	92585	35%	32001	124586	3-Jun-92
1510	21163	41.15	53	2168	2185	1625	248	6226	40251	38951	4526	2851	86579	34%	29763	116341	5-Jun-92
908	15228	23.41	54	1263	1185	1125	176	3749	23857	26339	2771	1831	54798	36%	19462	74260	3-Jun-92
948	14528	23.41	54	1263	1185	1125	176	3749	23084	21106	2721	1881	48792	35%	17223	66015	5-Jun-92
		23.41	54	1263	1185	1125	176	3749	2375	811	1185	1125	5496	29%	1620	7116	3-May-92
		13.67		747	1185	1125	89	3146	842	357	1185	1125	3509	22%	786	4295	
		3.00	71	213	60	0	76	349	213	86	60	0	359	17%	61	420	2-May-92
		3.17	50	159	1000	1000	4	2163	193	82	1000	1000	2275	23%	523	2798	2-May-92
		1.00	57	57	125	125	1	308	83	78	125	125	411	23%	95	506	2-May-92
		6.50	49	319			8	327	353	111	0	0	464	23%	107	571	6-Jan-92
		9.74		516	0	0	87	603	1533	454	0	0	1987	42%	834	2821	
		9.74	53	516			87	603	1533	454	0	0	1987	42%	834	2821	6-Jan-92
720	13580								15218	11933	1586	546	29283	35%	10207	39490	3-Jun-92
760	12880								14445	7763	1536	596	24340	34%	8394	32734	5-Jun-92
66	1243								702	250	375	200	1527	23%	347	1874	
50	50								0	50	0	0	50	15%	8	58	13-Jan-92
2	167								104	30	100	0	234	23%	54	287	2-May-92
13	986								542	117	275	200	1134	23%	261	1394	2-May-92
1	40								56	53	0	0	109	23%	25	134	10-Jan-92
3	28								377	111	0	0	488	42%	205	694	
3	28								377	111	0	0	488	42%	205	694	10-Jan-92
286	7237								7831	8450	300	55	16636	36%	5966	22602	
286	7237								7831	8450	300	55	16636	36%	5966	22602	
101	150								65	153	0	0	218	38%	83	301	23-Jan-92
7	630								689	38	0	0	727	38%	276	1003	23-Jan-92

MUON SUBSYSTEM COST MATRIX Rev 10 6/10/92

		Installation							Totals								
Material	Total	Labor	Rate	Subtotal	Captl. Eqpt.	Tooling	Material	Total	Labor	Material	Captl. Eqpt.	Tooling	Subtotal	Contingency		Total	Last modified
k$	k$	my	k$/my	k$	k$	k$	k$	k$	k$	k$	k$	k$	k$	Rate	Amount, k$	k$	
24	2339								2259	88	300	55	2702	38%	1027	3729	22-Apr-92
125	489								464	130	0	0	594	23%	137	730	22-Jan-92
29	3629								4005	8021	0	0	12026	36%	4329	16356	2-Jun-92
	0								349	20	0	0	369	31%	114	483	22-Jan-92
332	6603								7129	4081	250	105	11565	36%	4141	15705	
332	6603								7129	4081	250	105	11565	36%	4141	15705	
101	150								65	153	0	0	218	38%	83	301	23-Jan-92
7	630								689	38	0	0	727	38%	276	1003	23-Jan-92
24	2339								2259	88	250	105	2702	38%	1027	3729	22-Jan-92
125	489								464	130	0	0	594	23%	137	730	22-Jan-92
75	2995								3303	3652	0	0	6955	36%	2504	9459	5-Jun-92
									349	20	0	0	369	31%	114	483	22-Jan-92
146	3046								3820	1726	200	146	5892	36%	2142	8034	
146	3046								3820	1726	200	146	5892	36%	2142	8034	
101	150								80	153	0	0	233	38%	88	321	24-Jan-92
7	657								666	10	50	0	726	38%	276	1002	24-Jan-92
10	730								769	74	150	100	1093	38%	415	1509	2-Jun-92
5	369								464	10	0	0	474	23%	109	582	24-Jan-92
23	1141								1493	1459	0	46	2998	38%	1139	4137	2-Jun-92
									349	20	0	0	369	31%	114	483	23-Jan-92
169	1762								1714	550	711	145	3120	37%	1161	4281	
169	1762								1714	550	711	145	3120	37%	1161	4281	
101	123								39	123	0	0	162	23%	37	200	12-Jan-92
68	1639								1013	388	711	145	2257	38%	858	3115	3-Jun-92
0	0								662	39	0	0	701	38%	266	967	2-May-92
163	1697								1643	509	711	145	3008	37%	1119	4126	
163	1697								1643	509	711	145	3008	37%	1119	4126	
101	123								39	123	0	0	162	23%	37	200	12-Jan-92
62	1574								942	347	711	145	2145	38%	815	2960	3-Jun-92
0	0								662	39	0	0	701	38%	266	967	2-May-92
50	264								774	846	0	0	1620	24%	385	2005	
25	120								376	611	0	0	987	22%	213	1200	
25	120								376	611	0	0	987	22%	213	1200	
25	25								125	50	0	0	175	15%	26	201	31-Jan-92
	24								39	5	0	0	44	23%	10	55	31-Jan-92
	24								39	5	0	0	44	23%	10	55	31-Jan-92
	24								39	30	0	0	69	23%	16	85	31-Jan-92
	24								56	511	0	0	567	23%	130	697	3-May-92
	0								77	10	0	0	87	23%	20	106	31-Jan-92

		Installation							Totals								
Material	Total	Labor	Rate	Subtotal	Captl. Eqpt.	Tooling	Material	Total	Labor	Material	Captl. Eqpt.	Tooling	Subtotal	Contingency		Total	Last
k$	k$	my	k$/my	k$	k$	k$	k$	k$	k$	k$	k$	k$	k$	Rate	Amount, k$	k$	modified
50	264								774	1086	0	0	1860	0	440	2301	
25	120								376	851	0	0	1227	22%	268	1495	
25	120								376	851	0	0	1227	22%	268	1495	
25	25								125	50	0	0	175	15%	26	201	31-Jan-92
	24								39	5	0	0	44	23%	10	55	31-Jan-92
	24								39	5	0	0	44	23%	10	55	31-Jan-92
	24								39	30	0	0	69	23%	16	85	31-Jan-92
0	24								56	751	0	0	807	23%	186	993	3-May-92
	0								77	10	0	0	87	23%	20	106	31-Jan-92
25	144								398	235	0	0	633	27%	172	806	
25	144								398	235	0	0	633	27%	172	806	
25	25								125	50	0	0	175	15%	26	201	31-Jan-92
	24								39	5	0	0	44	23%	10	55	31-Jan-92
	24								39	5	0	0	44	23%	10	55	31-Jan-92
	24								39	30	0	0	69	23%	16	85	31-Jan-92
	48								79	135	0	0	214	42%	90	304	31-Jan-92
	0								77	10	0	0	87	23%	20	106	31-Jan-92
0	190								2706	10523	0	0	13229	40%	5261	18491	21-Apr-92
0	190								2706	9460	0	0	12166	40%	4836	17002	21-Apr-92
0	0								1239	7696	0	0	8935	40%	3574	12509	
0	0								1239	7696	0	0	8935	40%	3574	12509	
									1009	6703	0	0	7712	40%	3085	10796	21-Apr-92
									154	265	0	0	419	40%	167	586	21-Apr-92
									77	728	0	0	805	40%	322	1127	21-Apr-92
0	0								1239	6633	0	0	7872	40%	3149	11021	
0	0								1239	6633	0	0	7872	40%	3149	11021	
									1009	5703	0	0	6712	40%	2685	9396	21-Apr-92
									154	265	0	0	419	40%	167	586	21-Apr-92
									77	665	0	0	742	40%	297	1039	21-Apr-92
									970	2552	0	0	3522	40%	1409	4930	
									970	2552	0	0	3522	40%	1409	4930	
									739	2161	0	0	2900	40%	1160	4060	21-Apr-92
									154	275	0	0	429	40%	171	600	21-Apr-92
									77	116	0	0	193	40%	77	270	21-Apr-92
0	190								497	275	0	0	772	36%	279	1051	
0	95								249	135	0	0	384	36%	139	522	31-Jan-92

MUON SUBSYSTEM COST MATRIX Rev 10 6/10/92

		Installation							Totals								
Material	Total	Labor	Rate	Subtotal	Captl. Eqpt.	Tooling	Material	Total	Labor	Material	Captl. Eqpt.	Tooling	Subtotal	Contingency		Total	Last modified
k$	k$	my	k$/my	k$	k$	k$	k$	k$	k$	k$	k$	k$	k$	Rate	Amount, k$	k$	
0	95								172	125	0	0	297	40%	119	416	31-Jan-92
									77	10	0	0	87	23%	20	106	31-Jan-92
0	95								249	140	0	0	389	38%	140	528	
0	95								172	125	0	0	297	40%	119	416	31-Jan-92
									77	15	0	0	92	23%	21	113	31-Jan-92
98	798								2368	2512	0	160	5040	33%	1673	6712	3-Jun-92
98	798								2368	2512	0	160	5040	33%	1673	6712	3-Jun-92
49	399	0	0	0			0	0	1184	1256	0	80	2520	33%	836	3356	3-Jun-92
0	0	0	0	0			0	0	382	52	0	0	434	28%	121	555	
0	0	0		0			0	0	382	52	0	0	434	28%	121	555	28-May-92
49	399	0	0	0			0	0	802	1204	0	80	2086	34%	715	2801	
0	0	0		0			0	0	293	68	0	0	361	28%	101	462	28-May-92
0	0	0		0			0	0	35	8	0	0	43	39%	17	60	28-May-92
0	0	0		0			0	0	44	10	0	0	54	39%	21	74	28-May-92
0	0	0		0			0	0	44	10	0	0	54	39%	21	74	28-May-92
49	339	0		0			0	0	320	58	0	20	398	39%	155	553	28-May-92
0	30	0		0			0	0	26	419	0	30	475	34%	162	637	28-May-92
	30	0		0			0	0	41	631	0	30	702	34%	239	941	28-May-92
49	399	0	0	0			0	0	1184	1256	0	80	2520	33%	836	3356	3-Jun-92
0	0	0	0	0			0	0	382	52	0	0	434	28%	121	555	
0	0	0	0	0			0	0	382	52	0	0	434	28%	121	555	28-May-92
49	399	0	0	0			0	0	802	1204	0	80	2086	34%	715	2801	
0	0	0	0	0			0	0	293	68	0	0	361	28%	101	462	28-May-92
0	0	0	0	0			0	0	35	8	0	0	43	39%	17	60	28-May-92
0	0	0	0	0			0	0	44	10	0	0	54	39%	21	74	28-May-92
0	0	0	0	0			0	0	44	10	0	0	54	39%	21	74	28-May-92
49	339	0	0	0			0	0	320	58	0	20	398	39%	155	553	28-May-92
0	30	0		0			0	0	26	419	0	30	475	34%	162	637	28-May-92
	30	0		0			0	0	41	631	0	30	702	34%	239	941	28-May-92
49	399	0.00		0			0	0	1184	1256	0	80	2520	33%	836	3356	3-Jun-92
0	0	0	0	0			0	0	382	52	0	0	434	28%	121	555	
0	0	0	0	0			0	0	382	52	0	0	434	28%	121	555	28-May-92
49	399	0	0	0			0	0	802	1204	0	80	2086	34%	715	2801	
0	0	0	0	0			0	0	293	68	0	0	361	28%	101	462	28-May-92
0	0	0	0	0			0	0	35	8	0	0	43	39%	17	60	28-May-92
0	0	0	0	0			0	0	44	10	0	0	54	39%	21	74	28-May-92
0	0	0	0	0			0	0	44	10	0	0	54	39%	21	74	28-May-92
49	339	0	0	0			0	0	320	58	0	20	398	39%	155	553	28-May-92

		Installation							Totals								
Material	Total	Labor	Rate	Subtotal	Captl. Eqpt.	Tooling	Material	Total	Labor	Material	Captl. Eqpt.	Tooling	Subtotal	Contingency		Total	Last
k$	k$	my	k$/my	k$	k$	k$	k$	k$	k$	k$	k$	k$	k$	Rate	Amount, k$	k$	modified
0	30	0		0			0	0	26	419	0	30	475	34%	162	637	28-May-92
	30	0		0			0	0	41	631	0	30	702	34%	239	941	28-May-92
90	660								1190	560	0	0	1750	40%	700	2450	
90	660								1190	560	0	0	1750	40%	700	2450	
45	330								595	280	0	0	875	40%	350	1225	
45	330								595	280	0	0	875	40%	350	1225	
5	29								39	10	0	0	49	40%	20	69	31-Jan-92
15	110								111	20	0	0	131	40%	52	183	31-Jan-92
15	110								111	20	0	0	131	40%	52	183	31-Jan-92
10	81								87	215	0	0	302	40%	121	423	31-Jan-92
									248	15	0	0	263	40%	105	368	31-Jan-92
45	330								595	280	0	0	875	40%	350	1225	
45	330								595	280	0	0	875	40%	350	1225	
5	29								39	10	0	0	49	40%	20	69	31-Jan-92
15	110								111	20	0	0	131	40%	52	183	31-Jan-92
15	110								111	20	0	0	131	40%	52	183	31-Jan-92
10	81								87	215	0	0	302	40%	121	423	31-Jan-92
									248	15	0	0	263	40%	105	368	31-Jan-92
45	330								595	280	0	0	875	40%	350	1225	
45	330								595	280	0	0	875	40%	350	1225	
5	29								39	10	0	0	49	40%	20	69	31-Jan-92
15	110								111	20	0	0	131	40%	52	183	31-Jan-92
15	110								111	20	0	0	131	40%	52	183	31-Jan-92
10	81								87	215	0	0	302	40%	121	423	31-Jan-92
									248	15	0	0	263	40%	105	368	31-Jan-92
582	6634	18	51	905	1000	500	72	2477	13872	17410	1805	970	34057	36%	12166	46223	26-May-92
		17.74	51	905	1000	500	72	2477	1383	419	1000	500	3302	28%	926	4229	
		12.83	51	654	1000	500	16	2170	740	185	1000	500	2425	23%	558	2983	
		6.00	51	306			7	313	329	46	0	0	375	23%	86	461	27-Jan-92
		1.58	50	79	1000	500	2	1581	102	41	1000	500	1643	23%	378	2021	2-May-92
		3.00	53	159			4	163	182	43	0	0	225	23%	52	276	27-Jan-92
		2.25	49	110			3	113	128	55	0	0	183	23%	42	224	27-Jan-92
		4.91	51	250	0	0	56	306	644	234	0	0	878	42%	369	1246	
		4.91	51	250			56	306	644	234	0	0	878	42%	369	1246	27-Jan-92

MUON SUBSYSTEM COST MATRIX Rev 10 6/10/92

		Installation							Totals								
Material	Total	Labor	Rate	Subtotal	Captl. Eqpt.	Tooling	Material	Total	Labor	Material	Captl. Eqpt.	Tooling	Subtotal	Contingency		Total	Last modified
k$	k$	my	k$/my	k$	k$	k$	k$	k$	k$	k$	k$	k$	k$	Rate	Amount, k$	k$	
488	5622								7590	5554	780	365	14289	35%	4973	19261	
63	798								260	247	375	200	1082	23%	245	1326	
50	50								0	50	0	0	50	15%	8	58	13-Jan-92
2	155								92	30	100	0	222	23%	51	273	2-May-92
10	539								98	114	275	200	687	23%	158	845	2-May-92
1	54								70	53	0	0	123	23%	28	151	10-Jan-92
3	225								499	36	0	75	610	42%	256	867	
3	225								499	36	0	75	610	42%	256	867	10-Jan-92
281	3439								4311	3720	42	0	8073	37%	2954	11027	
281	3439								4311	3720	42	0	8073	37%	2954	11027	
101	150								65	153	0	0	218	38%	83	301	2-May-92
7	658								689	10	28	0	727	38%	276	1003	23-Jan-92
24	978								1239	62	14	0	1315	38%	500	1815	2-May-92
125	489								464	130	0	0	594	23%	137	730	22-Jan-92
24	1164								1523	3345	0	0	4868	38%	1850	6718	2-May-92
									332	20	0	0	352	31%	109	460	22-Jan-92
111	940								1700	335	363	90	2488	34%	852	3339	
111	940								1700	335	363	90	2488	34%	852	3339	
75	75								125	100	0	0	225	15%	34	259	31-Jan-92
	0								125	15	0	0	140	23%	32	172	31-Jan-92
	0								125	15	0	0	140	23%	32	172	31-Jan-92
	0								63	10	0	0	73	38%	28	100	31-Jan-92
36	865								601	156	363	90	1210	38%	460	1669	3-Jun-92
									662	39	0	0	701	38%	266	967	2-May-92
30	220								820	1216	0	0	2036	33%	666	2701	
15	110								410	608	0	0	1018	33%	333	1351	
15	110								410	608	0	0	1018	33%	333	1351	
15	15								125	40	0	0	165	15%	25	190	31-Jan-92
	24								39	2	0	0	41	23%	10	51	31-Jan-92
	24								39	2	0	0	41	23%	10	51	31-Jan-92
	24								39	27	0	0	66	23%	15	82	31-Jan-92
	24								56	533	0	0	589	42%	247	836	3-May-92
	0								111	4	0	0	115	23%	26	141	31-Jan-92
15	110								410	608	0	0	1018	33%	333	1351	
15	110								410	608	0	0	1018	33%	333	1351	
15	15								125	40	0	0	165	15%	25	190	31-Jan-92
	24								39	2	0	0	41	23%	10	51	31-Jan-92

		Installation							Totals								
Material	Total	Labor	Rate	Subtotal	Captl. Eqpt.	Tooling	Material	Total	Labor	Material	Captl. Eqpt.	Tooling	Subtotal	Contingency		Total	Last
k$	k$	my	k$/my	k$	k$	k$	k$	k$	k$	k$	k$	k$	k$	Rate	Amount, k$	k$	modified
	24								39	2	0	0	41	23%	10	51	31-Jan-92
	24								39	27	0	0	66	23%	15	82	31-Jan-92
	24								56	533	0	0	589	42%	247	836	31-Jan-92
	0								111	4	0	0	115	23%	26	141	2-Dec-91
0	119								2796	9674	0	0	12470	39%	4855	17325	21-Apr-92
0	0								2381	9026	0	0	11407	40%	4563	15970	
0	0								2381	9026	0	0	11407	40%	4563	15970	
									1078	5782	0	0	6860	40%	2744	9604	21-Apr-92
									847	2077	0	0	2924	40%	1170	4094	21-Apr-92
									354	737	0	0	1091	40%	436	1528	21-Apr-92
									102	105	0	0	207	40%	83	289	21-Apr-92
									0	325	0	0	325	40%	130	455	21-Apr-92
0	119								415	648	0	0	1063	27%	292	1355	
0	24								133	537	0	0	670	23%	154	824	
0	24								56	533	0	0	589	23%	135	724	31-Jan-92
									77	4	0	0	81	23%	19	99	31-Jan-92
	95								283	111	0	0	394	35%	138	532	
0	95								172	107	0	0	279	40%	112	391	31-Jan-92
									111	4	0	0	115	23%	26	141	31-Jan-92
49	399								1184	1256	0	80	2520	33%	836	3356	3-Jun-92
49	399			0			0	0	1184	1256	0	80	2520	33%	836	3356	3-Jun-92
0	0	0	0	0			0	0	382	52	0	0	434	28%	121	555	
0	0	0	0	0			0	0	382	52	0	0	434	28%	121	555	28-May-92
49	399	0	0	0			0	0	802	1204	0	80	2086	34%	715	2801	
0	0	0	0	0			0	0	293	68	0	0	361	28%	101	462	28-May-92
0	0	0	0	0			0	0	35	8	0	0	43	39%	17	60	28-May-92
0	0	0	0	0			0	0	44	10	0	0	54	39%	21	74	28-May-92
0	0	0	0	0			0	0	44	10	0	0	54	39%	21	74	28-May-92
49	339	0	0	0			0	0	320	58	0	20	398	39%	155	553	28-May-92
0	30	0		0			0	0	26	419	0	30	475	34%	162	637	28-May-92
	30	0		0			0	0	41	631	0	30	702	34%	239	941	28-May-92
25	495								918	507	25	25	1475	39%	576	2052	
25	495								918	507	25	25	1475	39%	576	2052	
25	495								918	507	25	25	1475	39%	576	2052	
0	0								16	7	0	0	23	40%	9	33	2-Dec-91
0	232								382	111	25	25	543	40%	217	760	2-Dec-91

MUON SUBSYSTEM COST MATRIX Rev 10 6/10/92

		Installation							Totals								
Material	Total	Labor	Rate	Subtotal	Captl. Eqpt.	Tooling	Material	Total	Labor	Material	Captl. Eqpt.	Tooling	Subtotal	Contingency		Total	Last modified
k$	k$	my	k$/my	k$	k$	k$	k$	k$	k$	k$	k$	k$	k$	Rate	Amount, k$	k$	
15	181								355	170	0	0	525	40%	210	735	2-Dec-91
10	81								87	215	0	0	302	40%	121	423	2-Dec-91
									79	4	0	0	83	23%	19	102	2-Dec-91
									3296	435	0	0	3731	10%	373	4104	
									1463	150	0	0	1613	10%	161	1774	27-Nov-91
									183	45	0	0	228	10%	23	251	27-Nov-91
									367	90	0	0	457	10%	46	502	27-Nov-91
									550	90	0	0	640	10%	64	704	27-Nov-91
									367	30	0	0	397	10%	40	436	27-Nov-91
									367	30	0	0	397	10%	40	436	27-Nov-91
									1791	754	0	0	2545	20%	509	3054	
									407	220	0	0	627	20%	125	752	31-Jan-92
									482	144	0	0	626	20%	125	751	31-Jan-92
									299	203	0	0	502	20%	100	602	31-Jan-92
									228	148	0	0	376	20%	75	451	31-Jan-92
									308	6	0	0	314	20%	63	377	31-Jan-92
									68	33	0	0	101	20%	20	121	31-Jan-92
									1392	300	0	0	1692	20%	338	2030	31-Jan-92

Muon Subsystem Cost Summary - Rev. 10 (w/o chamber electronics) 8/10/92

WBS No.	Item	Engrg/Design	M&S	Insp/Admin	Materials	Assembly	Installation	Equipment	Sub-total	Contingency	Total
(-3.1)	Totals - PDT	10.117	3.035	10.508	21.211	18.296	2.416	7.377	72.96	23.302	96.262
(-3.2)	Totals - LSDT	10.117	3.033	10.474	17.003	17.596	2.416	7.377	68.016	21.489	89.505
03.1.1	Central Region - PDT	4.433	0.962	3.923	14.045	12.936	1.439	4.602	42.34	14.479	56.819
03.1.1.1	Installation	0.891	0.075	0.221	0.56	0	1.439	2.31	5.496	1.62	7.116
03.1.1.2	Sector Assembly	1.668	0.408	2.822	10.805	11.448	0	2.132	29.283	10.207	39.49
03.1.1.2.3	PDT chambers	0.332	0.086	0.904	8.078	6.882	0	0.355	16.637	5.966	22.603
03.1.1.2.4	RPC chambers	0.332	0.089	0.934	1.491	2.7	0	0.346	5.892	2.142	8.034
03.1.1.2.5	Structure	0.555	0.072	0.422	0.292	0.906	0	0.856	3.103	1.161	4.264
03.1.1.2.6	Alignment	0.153	0.112	0.407	0.684	0.264	0	0	1.62	0.385	2.005
03.1.1.3	Electronics	0.153	0.075	0.154	0.2	0.19	0	0	0.772	0.279	1.051
03.1.1.4	Gas Systems	1.257	0.334	0.57	2.08	0.638	0	0.16	5.039	1.673	6.712
03.1.1.5	Cooling Systems	0.464	0.07	0.156	0.4	0.66	0	0	1.75	0.7	2.45
03.2.1	Central Region - LSDT	4.433	0.96	3.889	9.837	12.236	1.439	4.602	37.396	12.666	50.062
03.2.1.1	Installation	0.891	0.075	0.221	0.56	0	1.439	2.31	5.496	1.62	7.116
03.2.1.2	Sector Assembly	1.668	0.406	2.788	6.597	10.748	0	2.132	24.339	8.394	32.733
03.2.1.2.3	LSDT chambers	0.332	0.086	0.882	3.663	6.248	0	0.355	11.566	4.141	15.707
03.2.1.2.4	RPC chambers	0.332	0.089	0.934	1.491	2.7	0	0.346	5.892	2.142	8.034
03.2.1.2.5	Structure	0.555	0.089	0.422	0.292	0.906	0	0.856	3.12	1.161	4.281
03.2.1.2.6	Alignment	0.153	0.112	0.407	0.684	0.264	0	0	1.62	0.385	2.005
03.2.1.3	Electronics	0.153	0.075	0.154	0.2	0.19	0	0	0.772	0.279	1.051
03.2.1.4	Gas Systems	1.257	0.334	0.57	2.08	0.638	0	0.16	5.039	1.673	6.712
03.2.1.5	Cooling Systems	0.464	0.07	0.156	0.4	0.66	0	0	1.75	0.7	2.45
03.1.2	End Cap Region	2.501	0.584	3.289	7.166	5.36	0.977	2.775	22.652	7.603	30.255
03.1.2.1	Installation	0.297	0.036	0.182	0.311	0	0.977	1.5	3.303	0.926	4.229
03.1.2.2	Sector Assembly	1.341	0.332	2.26	4.734	4.477	0	1.145	14.289	4.973	19.262
03.1.2.2.3	CSC chambers	0.332	0.086	0.864	3.353	3.397	0	0.042	8.074	2.954	11.028
03.1.2.2.4	Structure	0.555	0.14	0.768	0.084	0.487	0	0.453	2.487	0.852	3.339
03.1.2.2.5	Alignment	0.157	0.074	0.473	1.112	0.22	0	0	2.036	0.666	2.702
03.1.2.3	Electronics	0.155	0.017	0.142	0.631	0.119	0	0	1.064	0.292	1.356
03.1.2.4	Gas Systems	0.629	0.167	0.285	1.04	0.319	0	0.08	2.52	0.836	3.356
03.1.2.5	Cooling Systems	0.079	0.032	0.42	0.45	0.445	0	0.05	1.476	0.576	2.052
03.1.3	Project Mgmt.	0	0.435	3.296	0	0	0		3.731	0.373	4.104
13	R&D	1.791	0.754	0	0	0	0		2.545	0.509	3.054
23	Concept Design	1.392	0.3	0	0	0	0		1.692	0.338	2.03

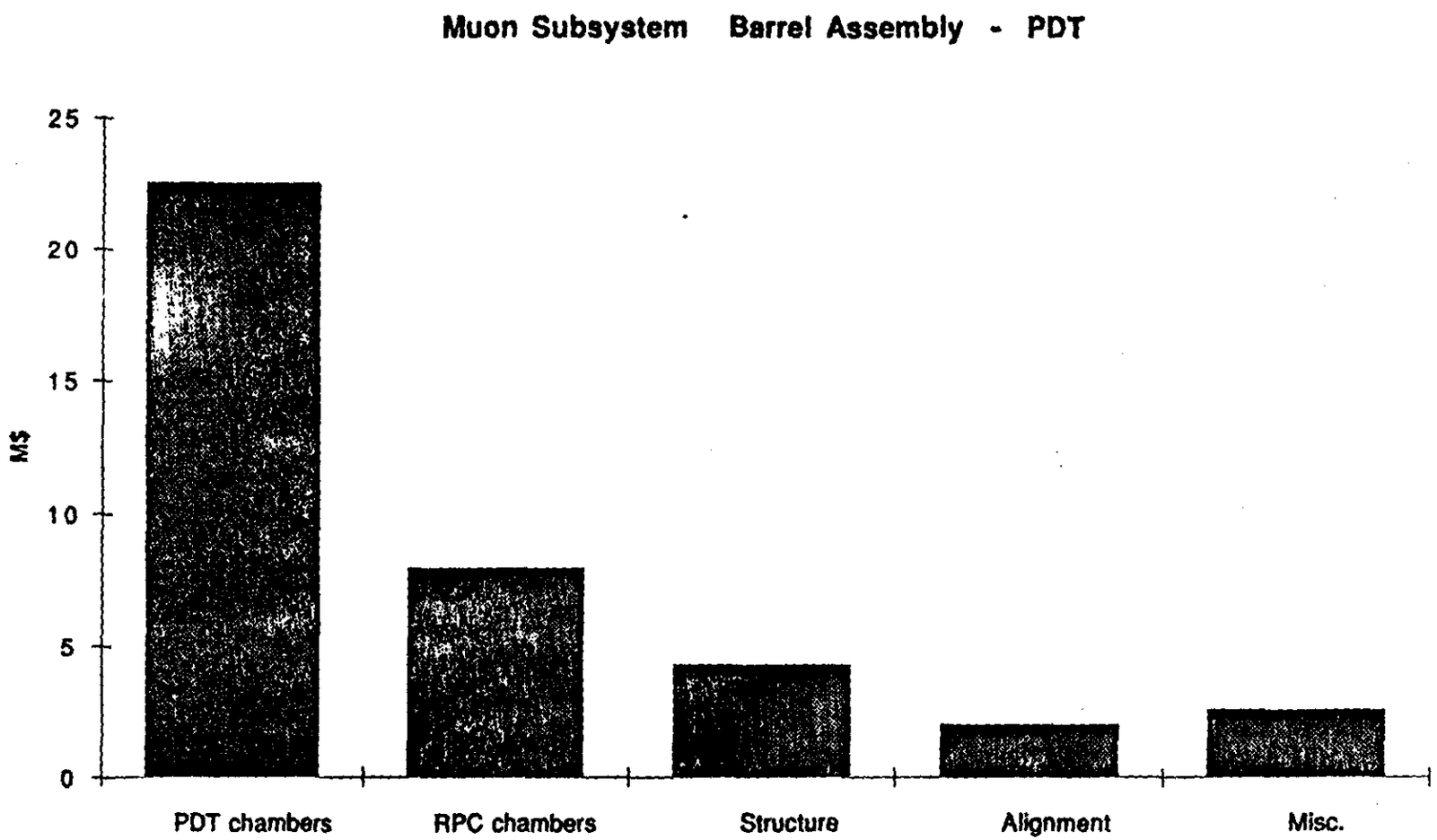
Muon Subsystem Barrel Assembly - PDT
M$
25
20
15
10
5
0
PDT chambers
RPC chambers
Structure
Alignment
Misc.

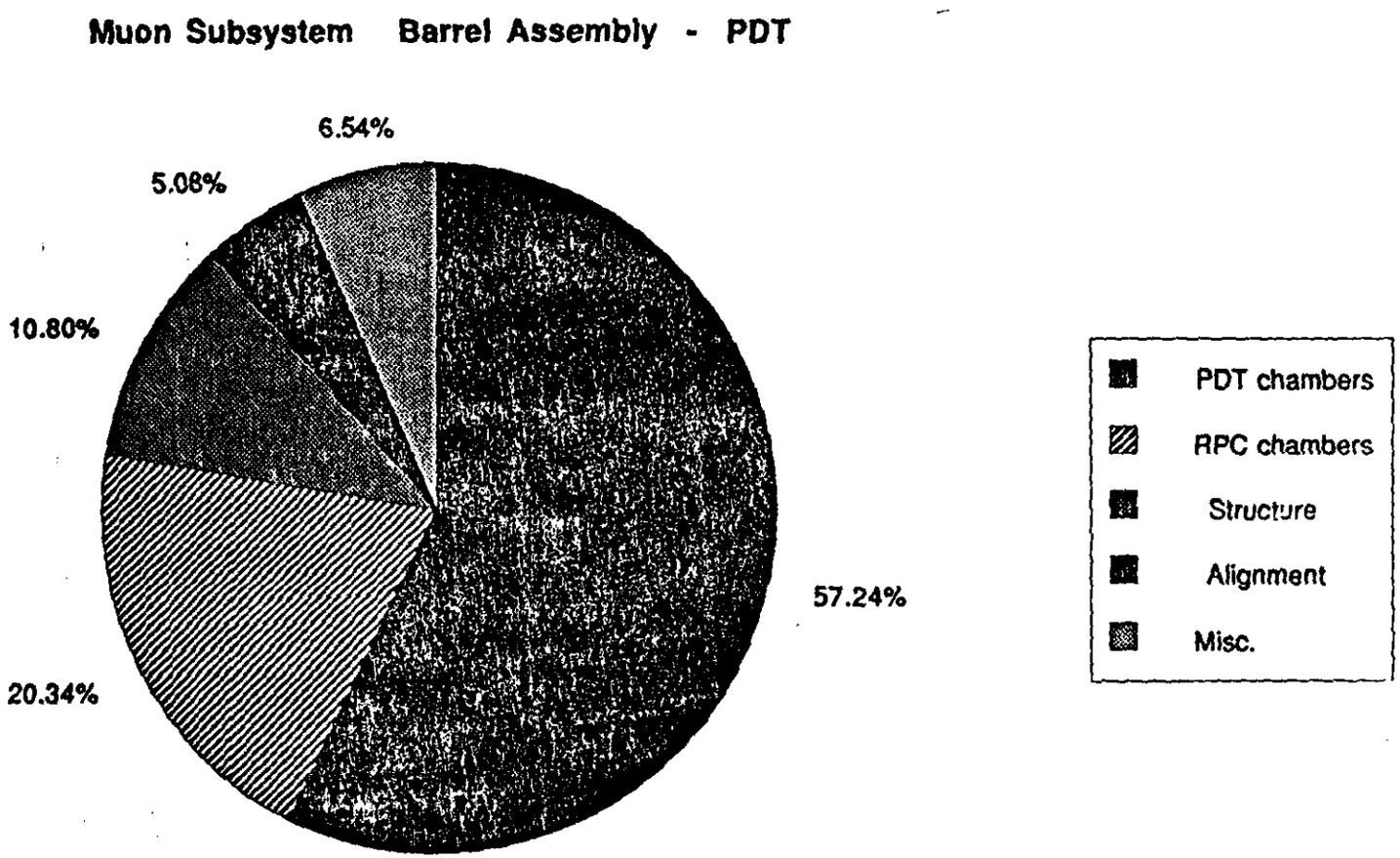
Muon Subsystem Barrel Assembly - PDT
6.54%
5.08%
10.80%
20.34%
57.24%
PDT chambers
RPC chambers
Structure
Alignment
Misc.

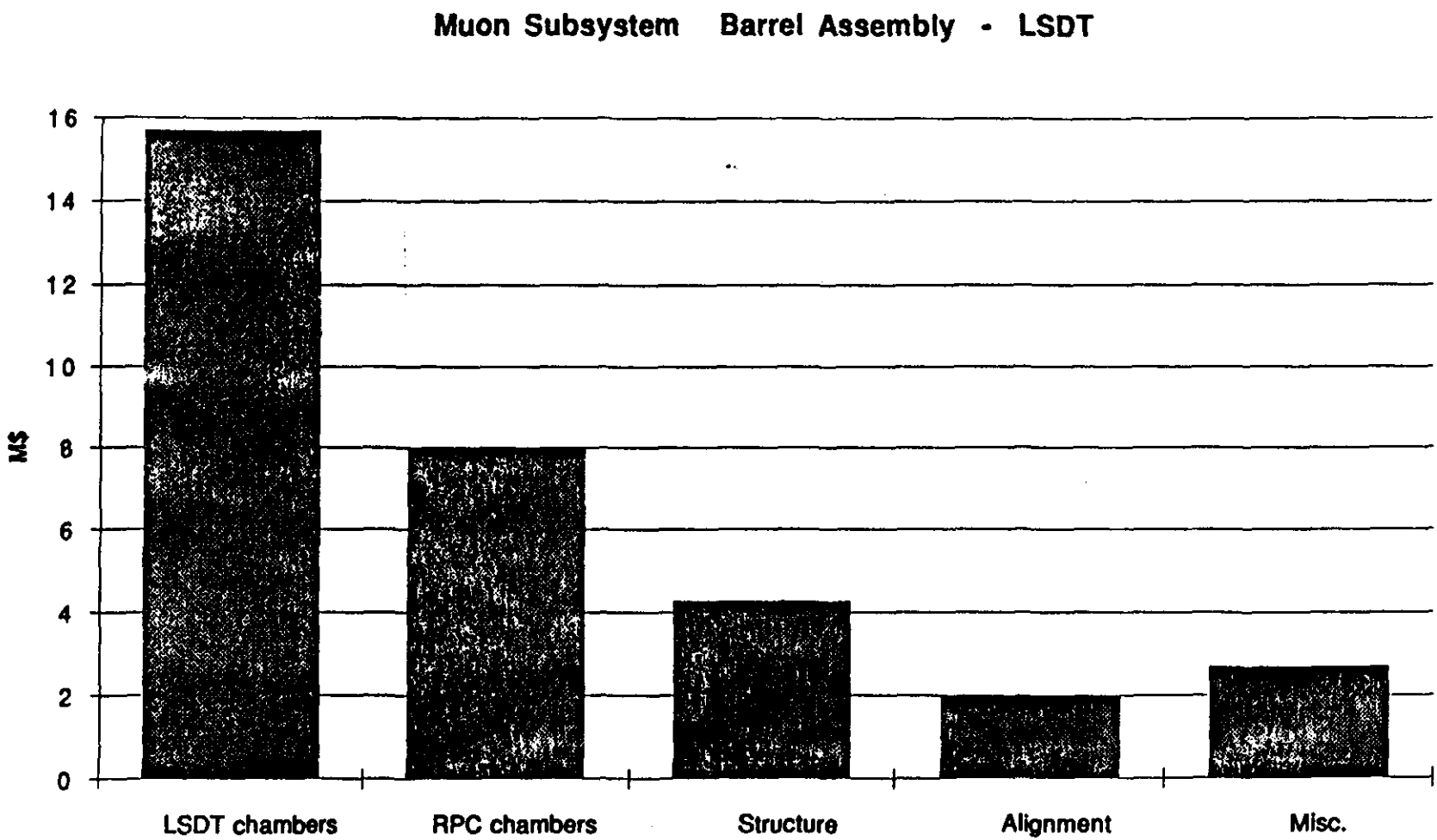
Muon Subsystem Barrel Assembly - LSDT
M$
16
14
12
10
8
6
4
2
0
LSDT chambers
RPC chambers
Structure
Alignment
Misc.

Muon Subsystem Barrel Assembly - LSDT

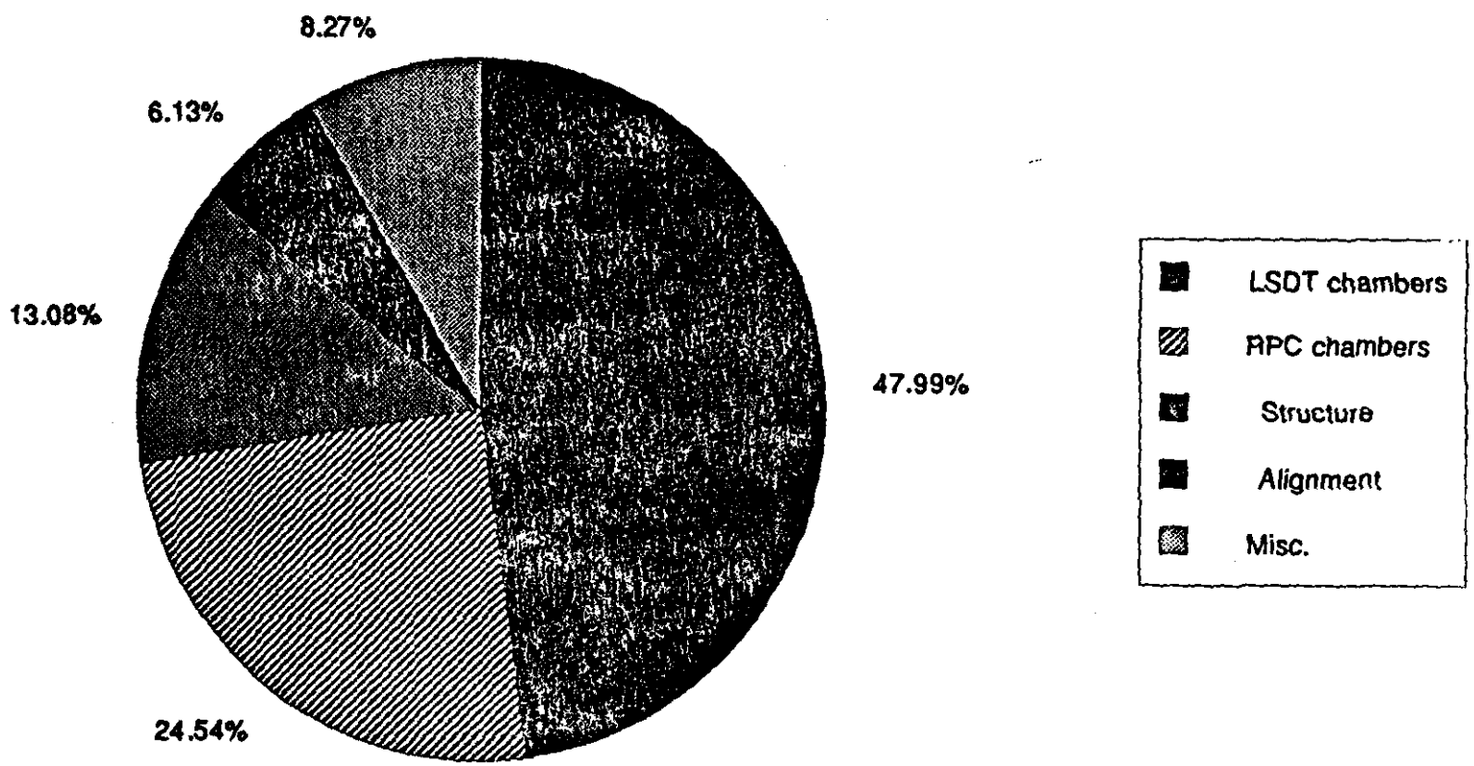

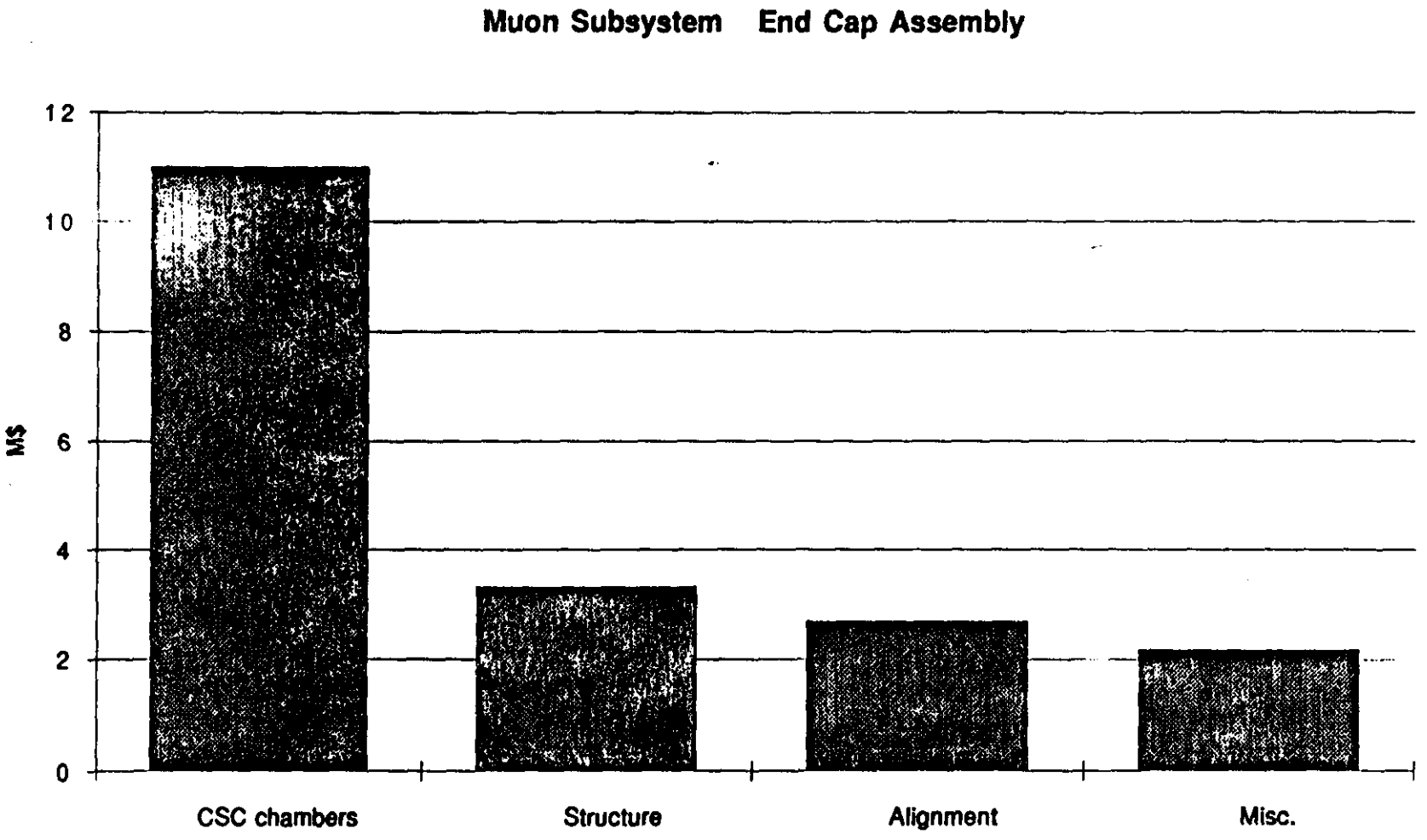
Muon Subsystem End Cap Assembly
M$
12
10
8
6
4
2
0
CSC chambers
Structure
Alignment
Misc.

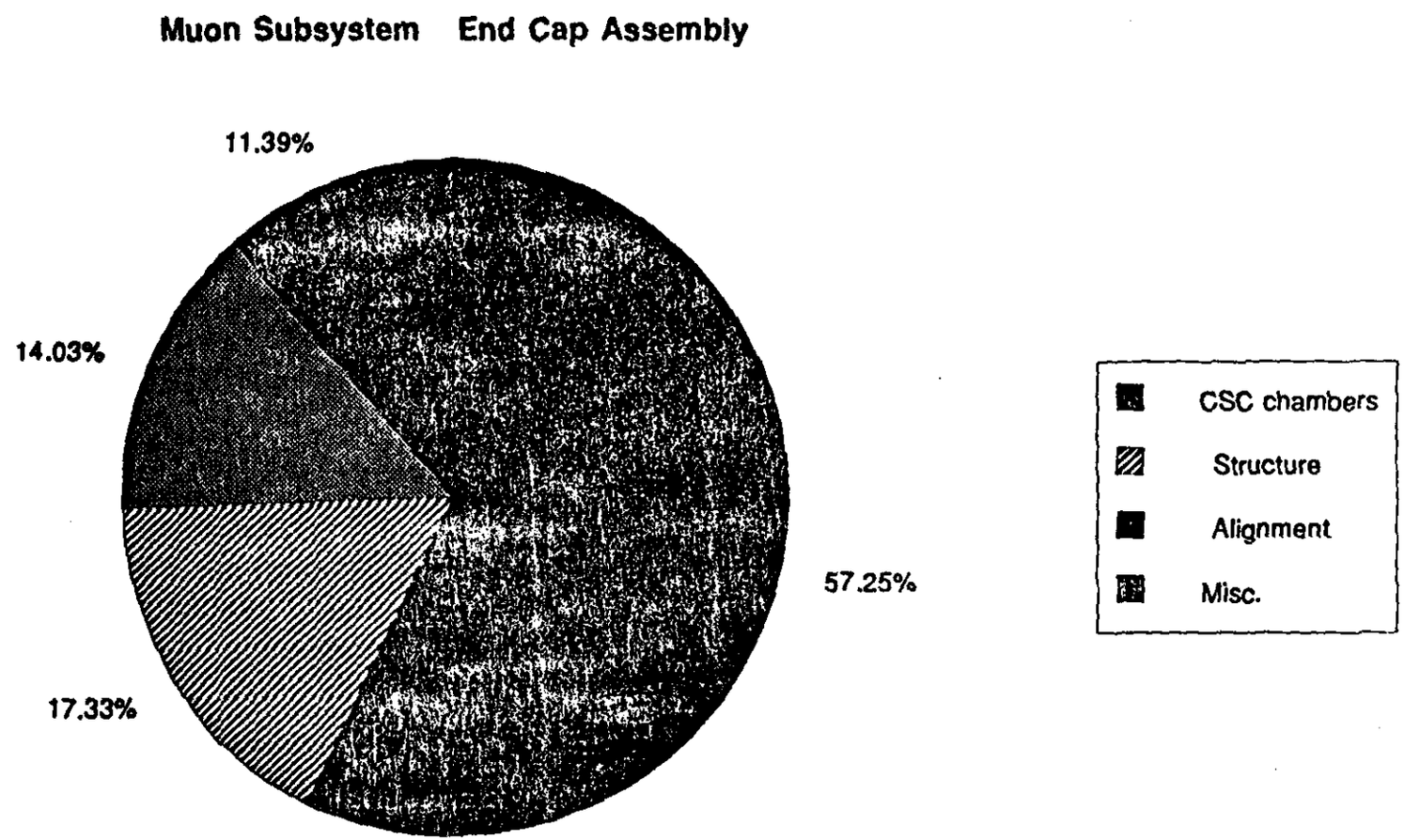
Muon Subsystem End Cap Assembly
11.39%
14.03%
17.33%
57.25%
CSC chambers
Structure
Alignment
Misc.

Muon Subsystem Cost Summary - Rev. 10 (with electronics) 8/10/92

WBS No.	Item	Engrg/Design	M&S	Insp/Admin	Materials	Assembly	Installation	Equipment	Sub-total	Contingency	Total
(-3.1)	Totals - PDT	14.13	6.115	11.086	37.405	18.296	2.416	7.377	96.825	32.847	129.672
(-3.2)	Totals - LSDT	14.13	6.113	11.052	32.134	17.596	2.416	7.377	90.818	30.609	121.427
03.1.1	Central Region - PDT	6.065	2.507	4.501	22.748	12.936	1.439	4.602	54.798	19.461	74.259
03.1.1.1	Installation	0.891	0.075	0.221	0.56	0	1.439	2.31	5.496	1.62	7.116
03.1.1.2	Sector Assembly	1.668	0.408	2.822	10.805	11.448	0	2.132	29.283	10.207	39.49
03.1.1.3	Electronics	1.785	1.62	0.732	8.903	0.19	0	0	13.23	5.261	18.491
03.1.1.4	Gas Systems	1.257	0.334	0.57	2.08	0.638	0	0.16	5.039	1.673	6.712
03.1.1.5	Cooling Systems	0.464	0.07	0.156	0.4	0.66	0	0	1.75	0.7	2.45
03.2.1	Central Region - LSDT	6.065	2.505	4.467	17.477	12.236	1.439	4.602	48.791	17.223	66.014
03.2.1.1	Installation	0.891	0.075	0.221	0.56	0	1.439	2.31	5.496	1.62	7.116
03.2.1.2	Sector Assembly	1.668	0.406	2.788	8.597	10.748	0	2.132	24.339	8.394	32.733
03.2.1.3	Electronics	1.785	1.62	0.732	7.84	0.19	0	0	12.167	4.836	17.003
03.2.1.4	Gas Systems	1.257	0.334	0.57	2.08	0.638	0	0.16	5.039	1.673	6.712
03.2.1.5	Cooling Systems	0.464	0.07	0.156	0.4	0.66	0	0	1.75	0.7	2.45
03.1.2	End Cap Region	4.882	2.119	3.289	14.657	5.36	0.977	2.775	34.059	12.166	46.225
03.1.2.1	Installation	0.297	0.036	0.182	0.311	0	0.977	1.5	3.303	0.926	4.229
03.1.2.2	Sector Assembly	1.341	0.332	2.26	4.734	4.477	0	1.145	14.289	4.973	19.262
03.1.2.3	Electronics	2.536	1.552	0.142	8.122	0.119	0	0	12.471	4.855	17.326
03.1.2.4	Gas Systems	0.629	0.167	0.285	1.04	0.319	0	0.08	2.52	0.836	3.356
03.1.2.5	Cooling Systems	0.079	0.032	0.42	0.45	0.445	0	0.05	1.476	0.576	2.052
03.1.3	Project Mgmt.	0	0.435	3.296	0	0	0		3.731	0.373	4.104
13	R&D	1.791	0.754	0	0	0	0		2.545	0.509	3.054
23	Concept Design	1.392	0.3	0	0	0	0		1.692	0.338	2.03

Coleman Johnson/SSCL

Coleman Sotherland

GEM DETECTOR LAYOUT
WITH SCINTILLATOR CALORIMETER
OPTION 6

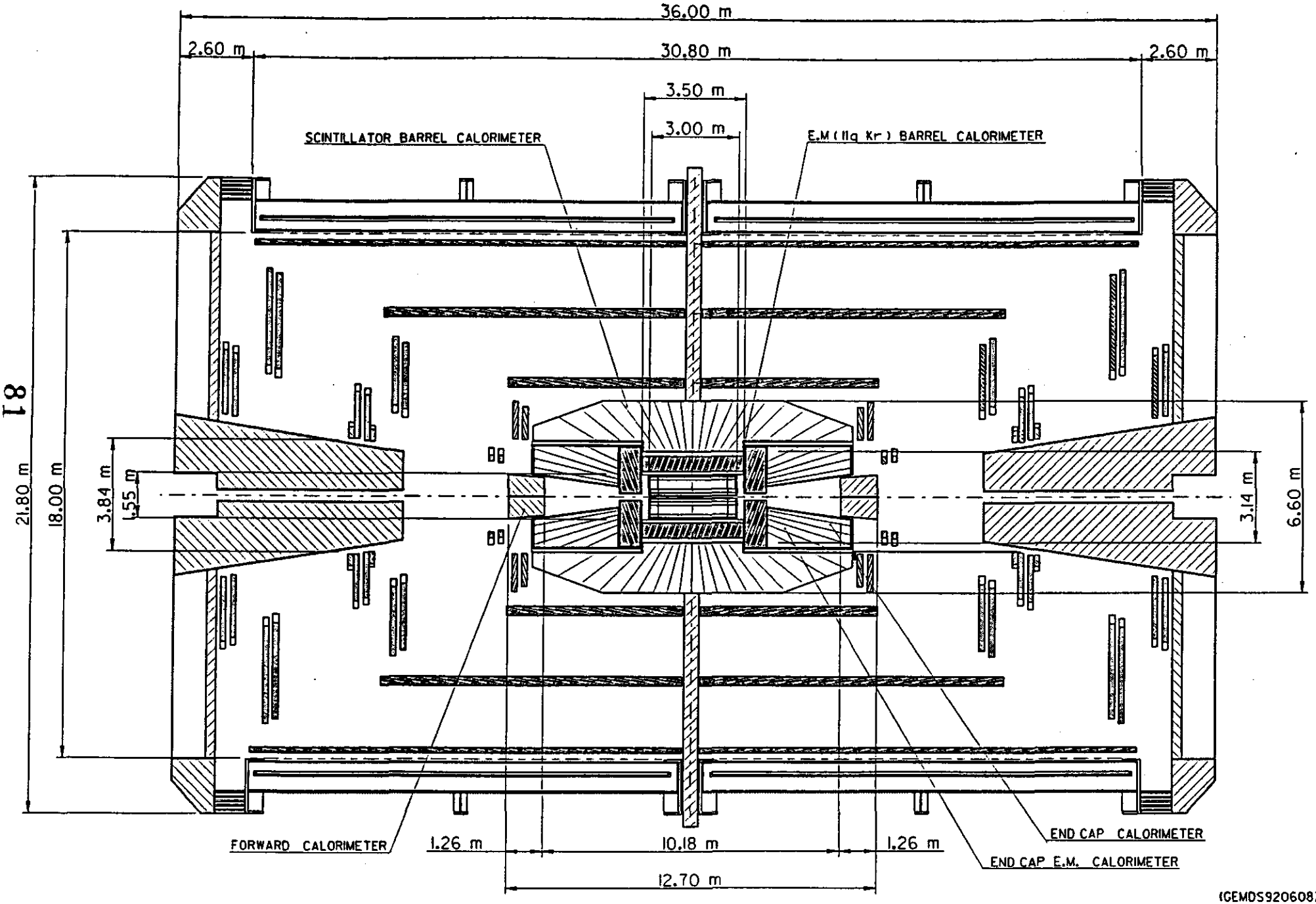

(GEMDS920608ZC)

GEM DETECTOR LAYOUT
WITH SCINTILLATOR CALORIMETER
OPTION 5

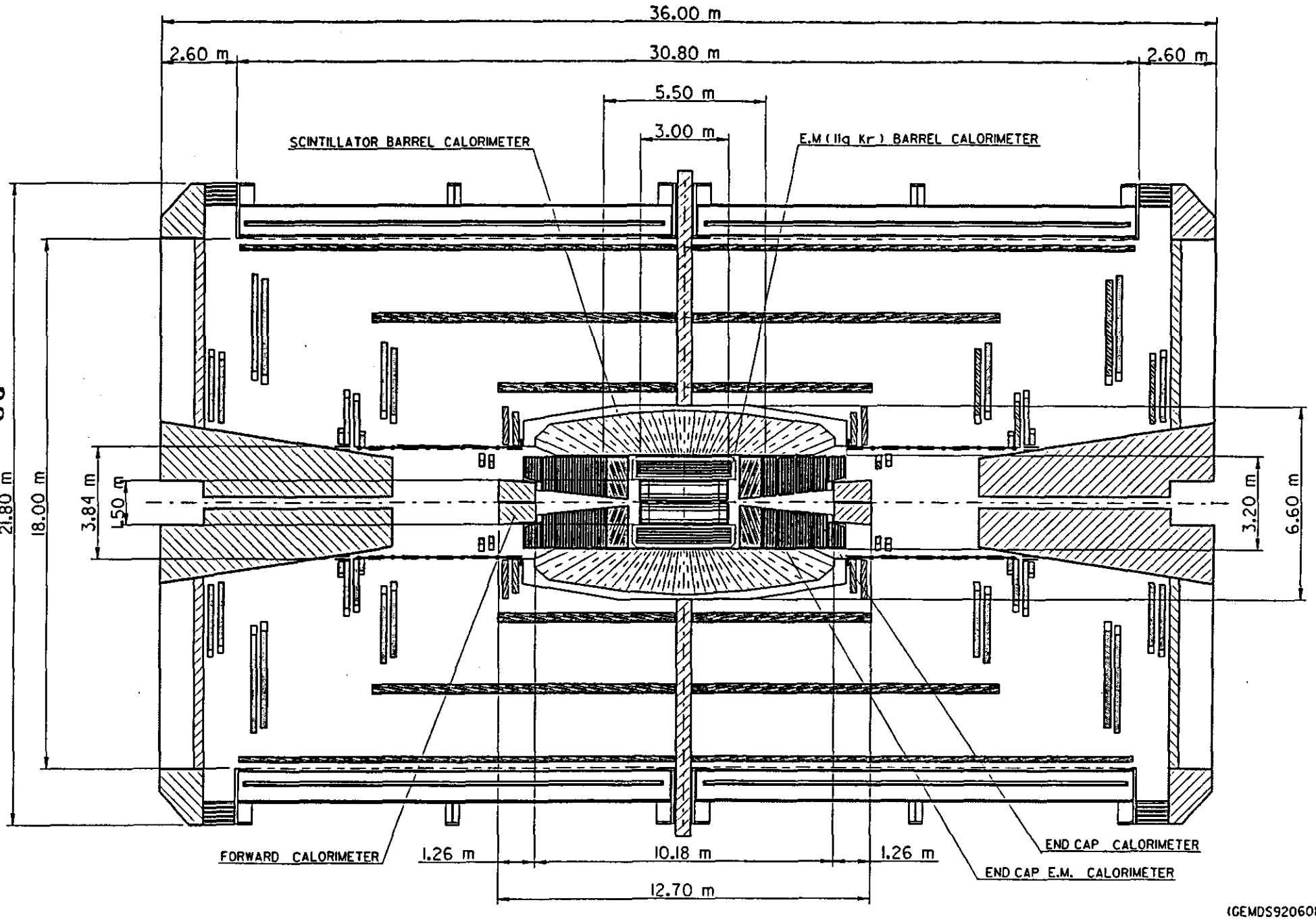

(GEMDS920608ZC)

GEM DETECTOR LAYOUT
WITH SCINTILLATOR CALORIMETER
OPTION 5a

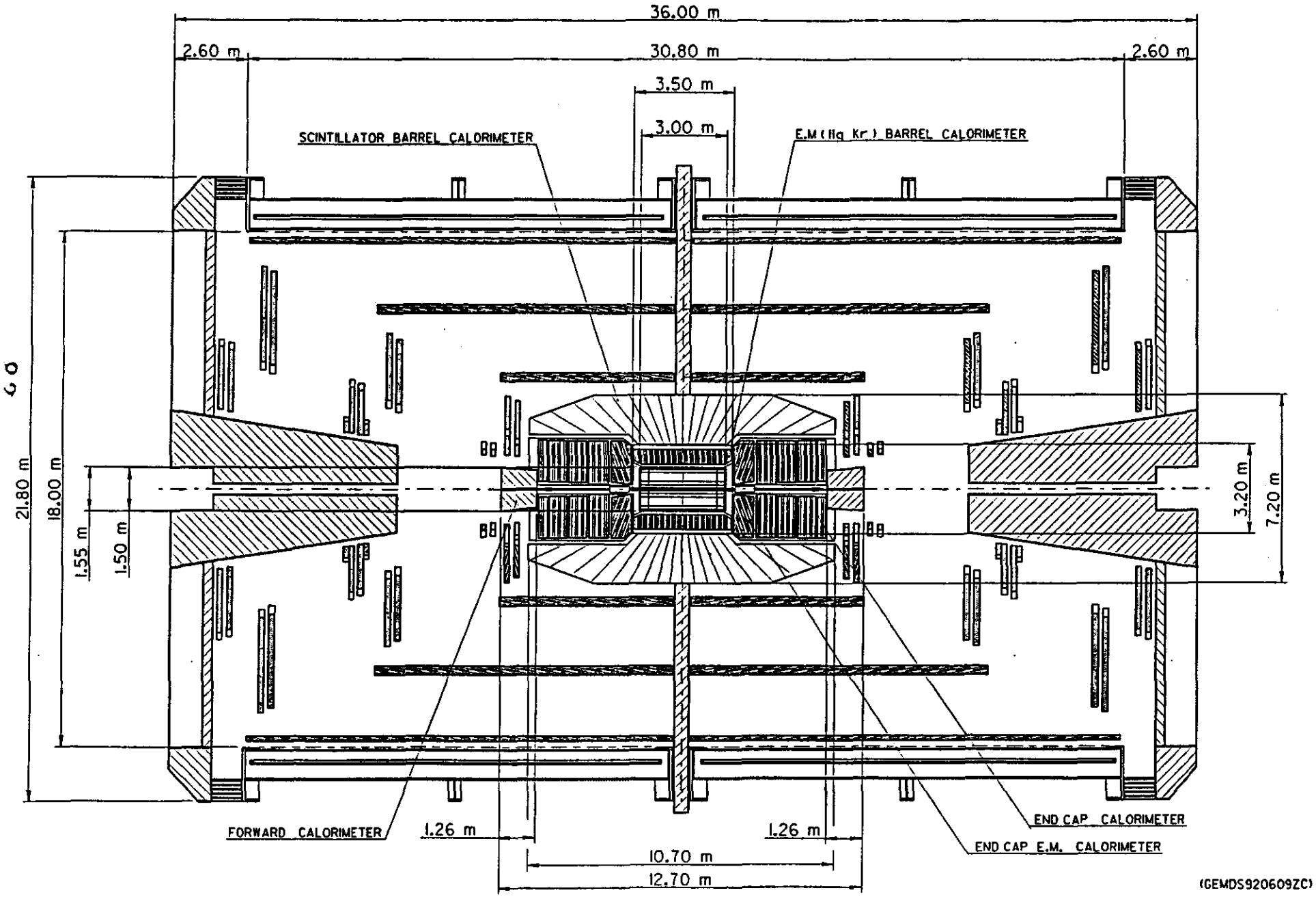

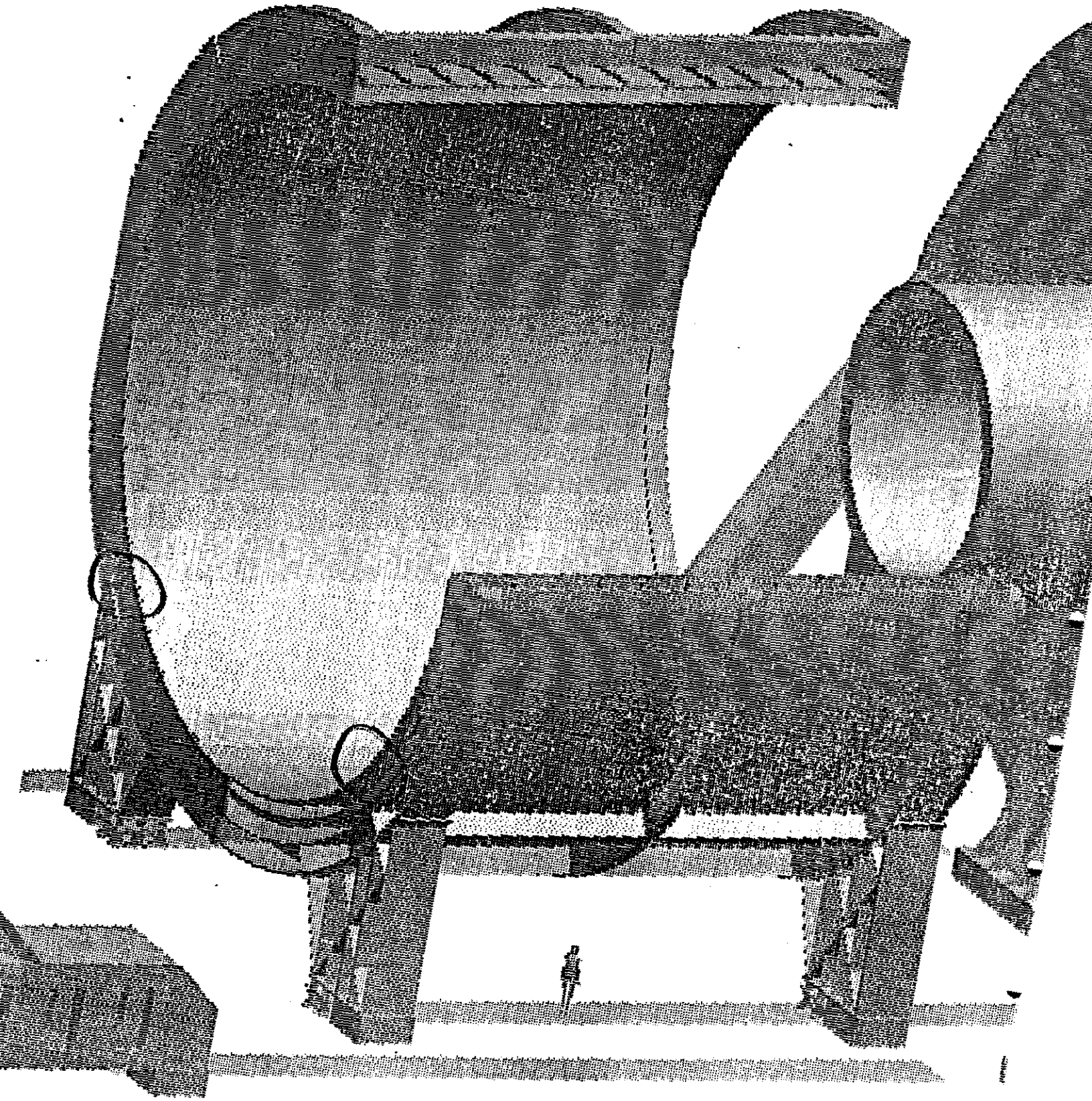

PHASE 7 - 8

TEST MAGNET SYSTEMS
MAP MAGNET FIELD

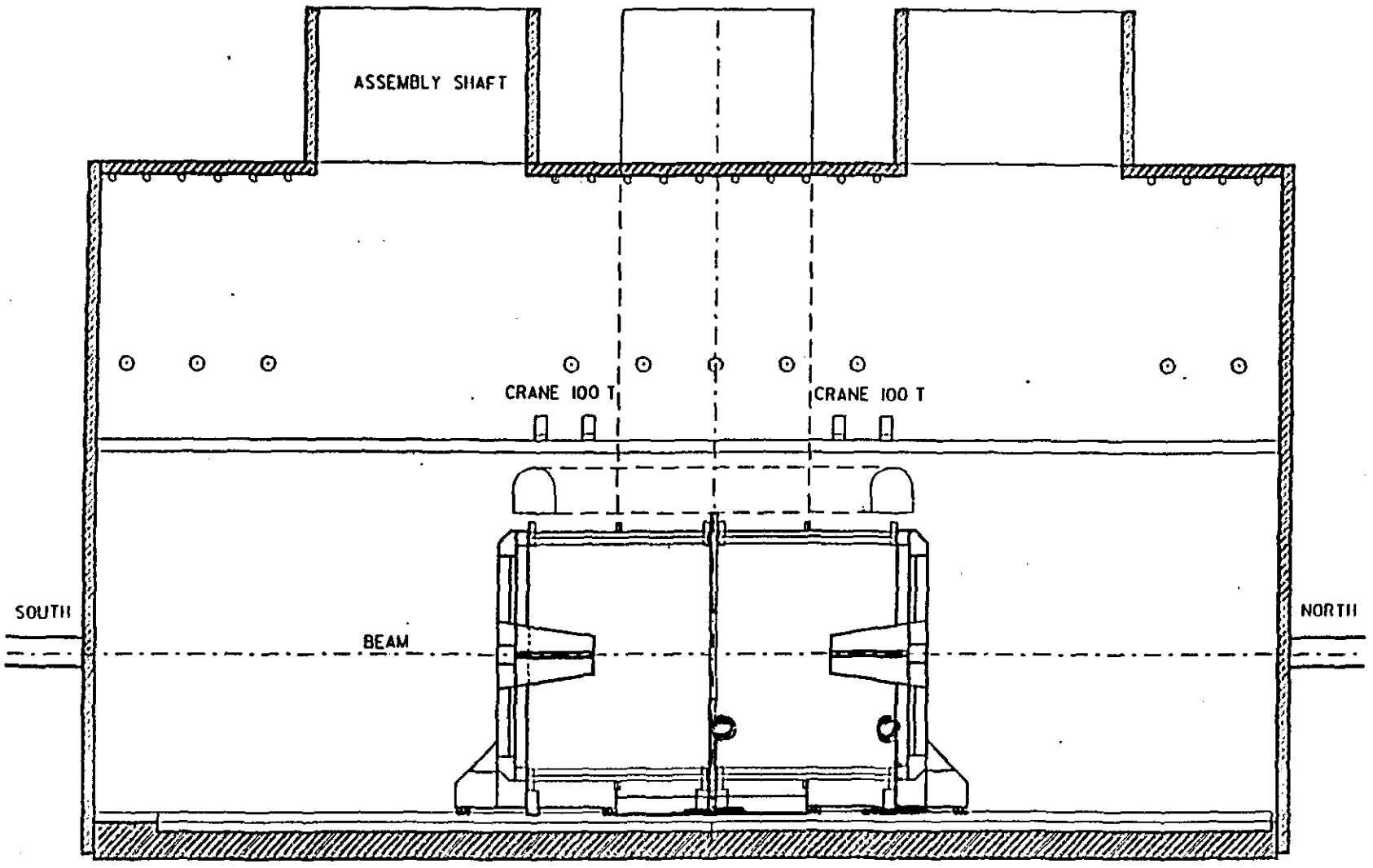

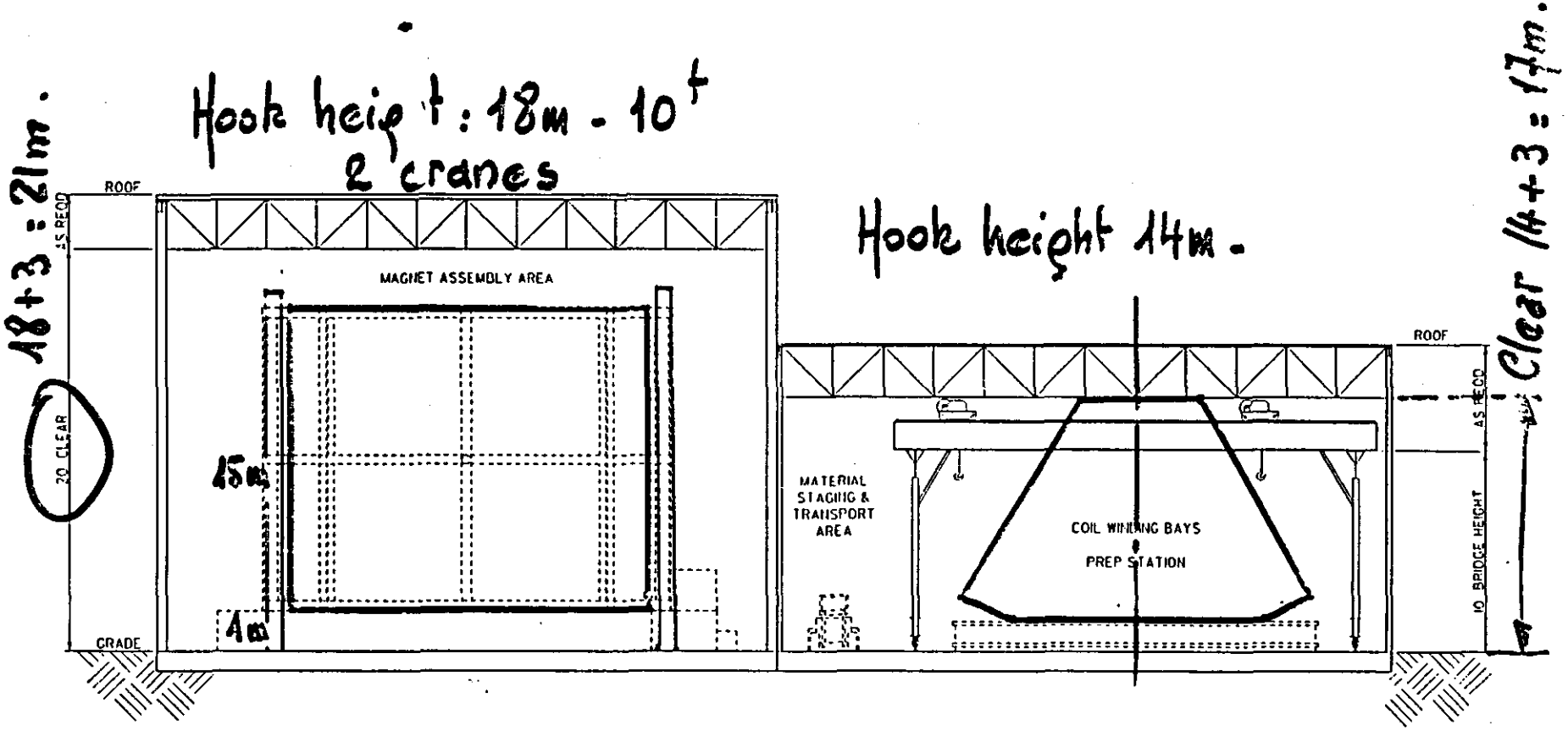

SECTION A-A

DIMENSIONS ARE SHOWN IN METERS UNLESS NOTED OTHERWISE.

THIS IS A CAD GENERATED DRAWING. DO NOT MAKE MANUAL REVISIONS OR ALTERATIONS.

DRAWN: H HAZLETT	PHYSICS RESEARCH DIVISION	SSC	GEM EXPERIMENTAL FACILITIES
T PROSAPIO		CONTRACT NUMBER DE-AC35-89ER40486	COIL WINDING AND MAGNET ASSEMBLY BUILDINGS
			SECTION A-A
			DATE 04-21-92 · SIZE C · DRAWING NUMBER GCD-000207

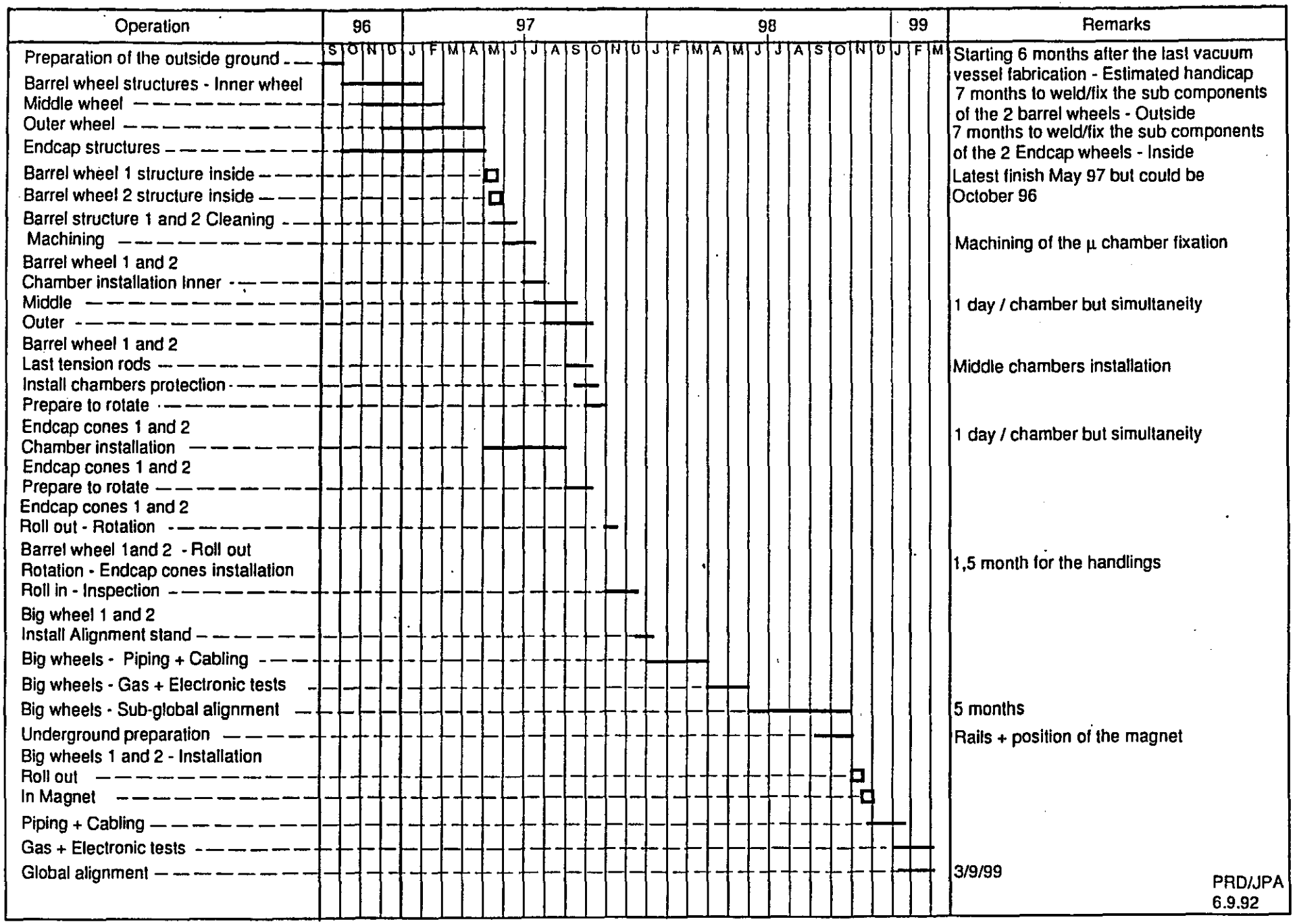

Some operations could appear short but we started with 6 months of estimated handicap

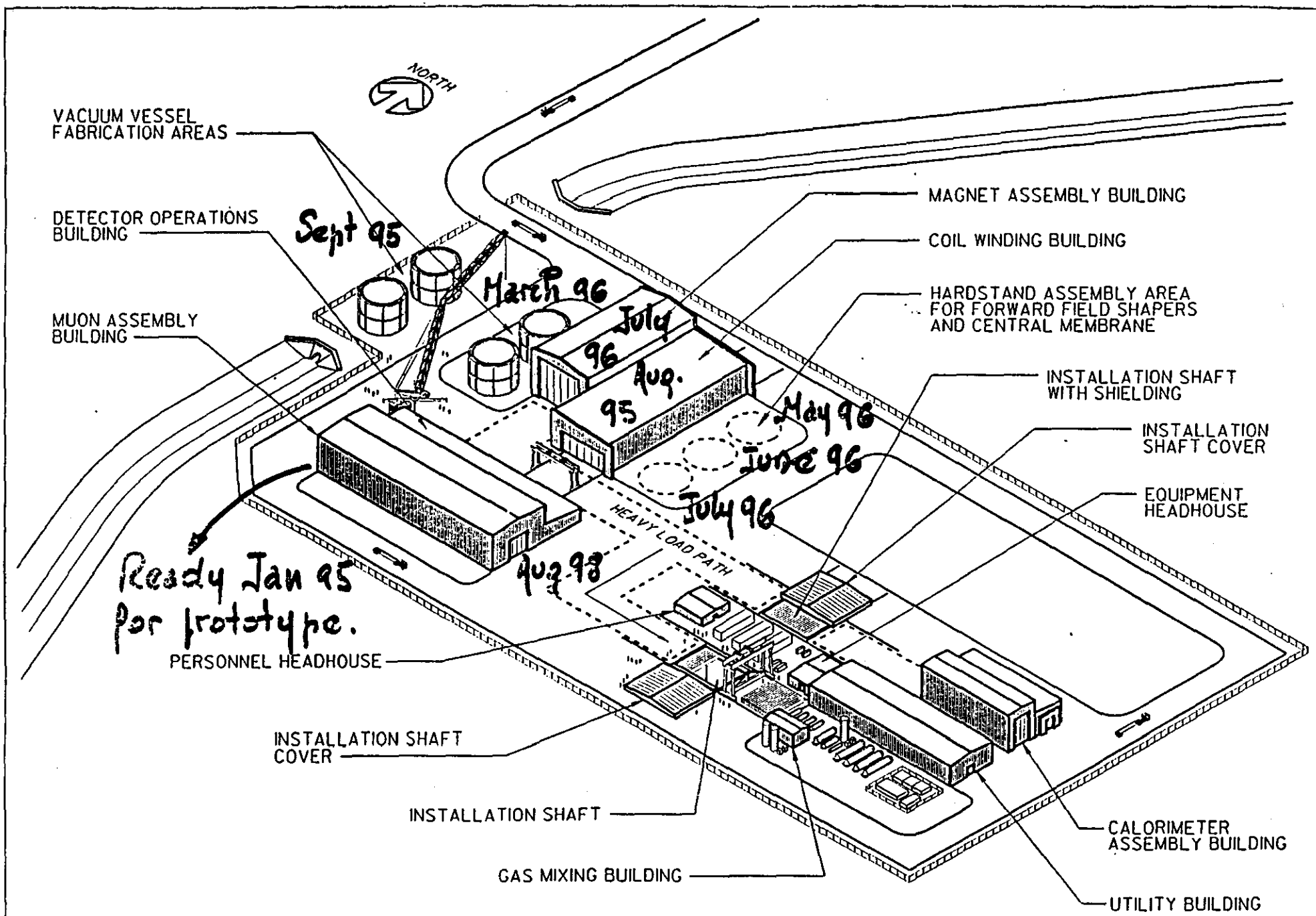

IR-5 SITE

TVP/klh/hh - 5/14/92 - CC0000187

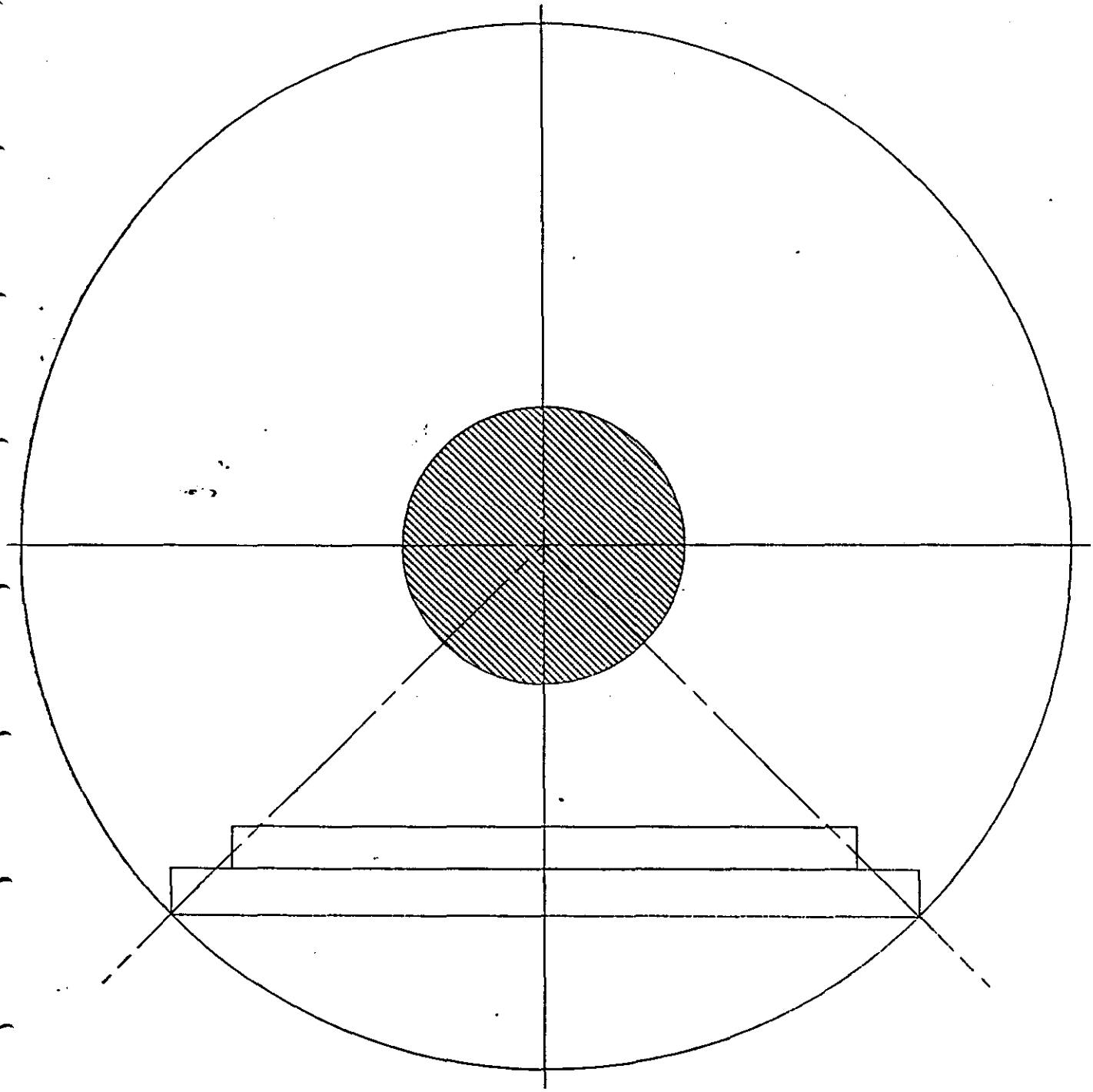

Measure of the sliding paths deformation under magnetic field

Membrane side : 140 t
+ 25 t

FFS side 70 t
+ 35 t

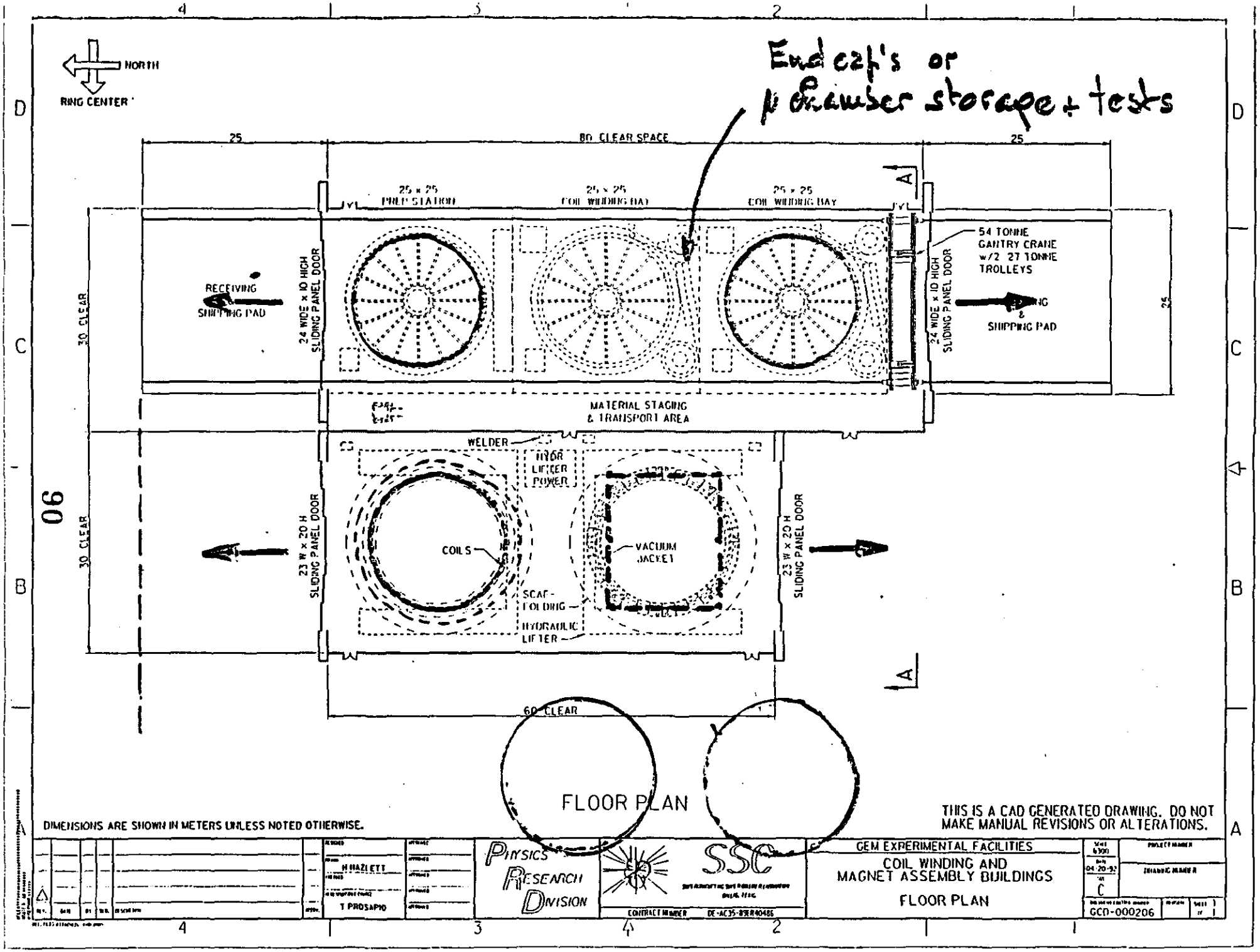
End cap's or
μ chamber storage + tests
NORTH
RING CENTER
25
80 CLEAR SPACE
25
25 x 25
PREP STATION
25 x 25
COIL WINDING BAY
25 x 25
COIL WINDING BAY
54 TONNE
GANTRY CRANE
w/2 27 TONNE
TROLLEYS
RECEIVING
SHIPPING PAD
24 WIDE x 10 HIGH
SLIDING PANEL DOOR
30 CLEAR
MATERIAL STAGING
& TRANSPORT AREA
WELDER
HYDR
LIFTER
POWER
COILS
VACUUM
JACKET
SCAF-
FOLDING
HYDRAULIC
LIFTER
23 W x 20 H
SLIDING PANEL DOOR
60 CLEAR
FLOOR PLAN
DIMENSIONS ARE SHOWN IN METERS UNLESS NOTED OTHERWISE.
THIS IS A CAD GENERATED DRAWING. DO NOT
MAKE MANUAL REVISIONS OR ALTERATIONS.
H HAZLETT
T PROSAPIO
PHYSICS
RESEARCH
DIVISION
SSC
CONTRACT NUMBER DE-AC35-89ER40486
GEM EXPERIMENTAL FACILITIES
COIL WINDING AND
MAGNET ASSEMBLY BUILDINGS
FLOOR PLAN
04-20-92
C
GCD-000206

Big wheel alignment
Bittel + Budczy.

Scaffolding coverage
Access to each chamber

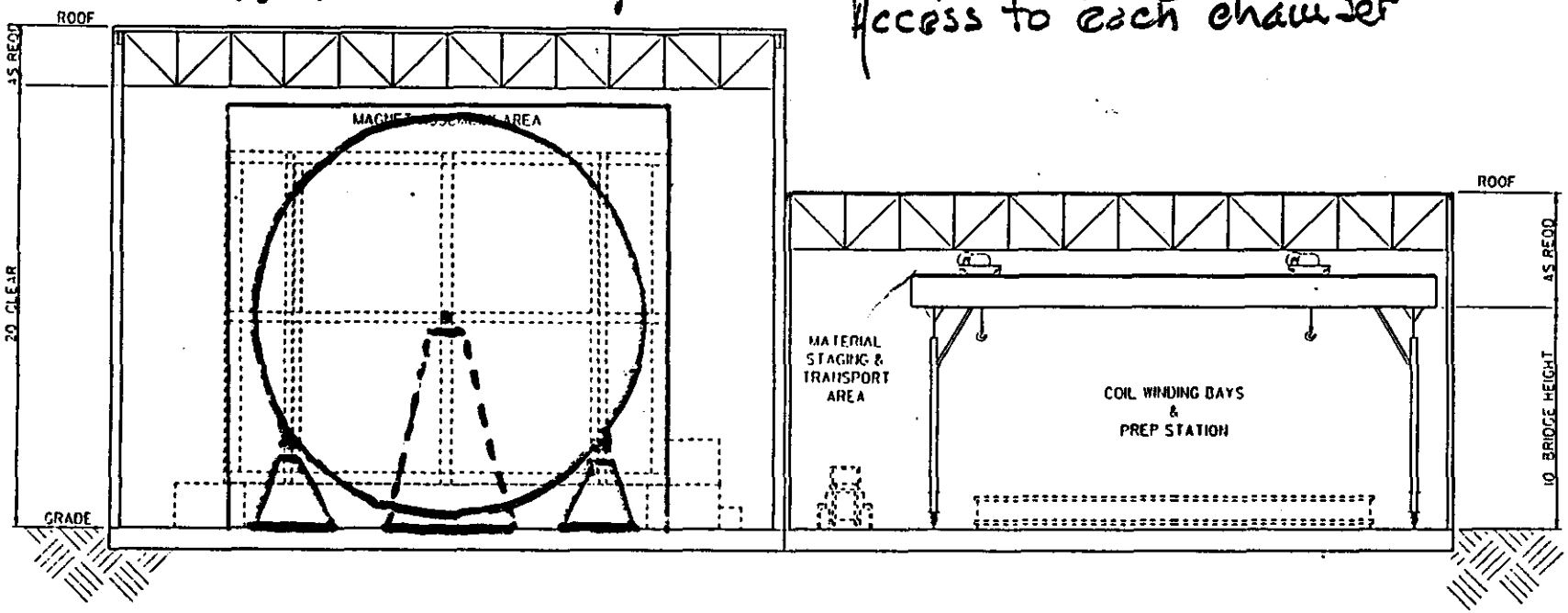

SECTION A-A

DIMENSIONS ARE SHOWN IN METERS UNLESS NOTED OTHERWISE.

THIS IS A CAD GENERATED DRAWING. DO NOT MAKE MANUAL REVISIONS OR ALTERATIONS.

H HAZLETT	PHYSICS RESEARCH DIVISION	SSC	GEM EXPERIMENTAL FACILITIES
T PROSAPIO		CONTRACT NUMBER DE-AC35-87ER40496	COIL WINDING AND MAGNET ASSEMBLY BUILDINGS
			SECTION A-A

SIZE 650 | DATE 04-20-92 | SIZE C | PROJECT NUMBER | DRAWING NUMBER GCD-000207 | SHEET 1 OF 1

91

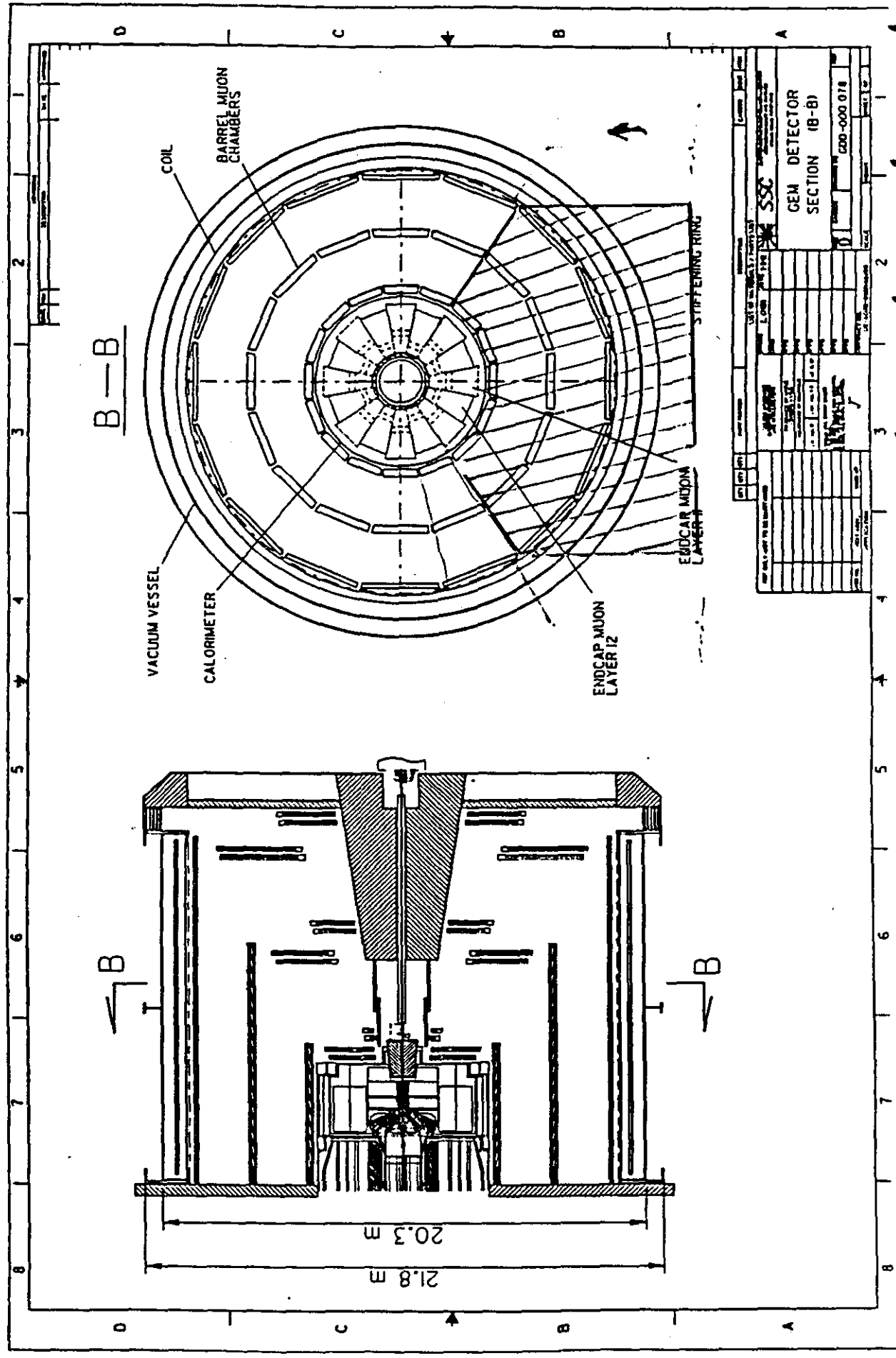
B — B
COIL
BARREL MUON CHAMBERS
STIFFENING RING
VACUUM VESSEL
CALORIMETER
ENDCAP MUON LAYER 12
ENDCAP MUON LAYER 11
B
B
20.3 m
21.8 m
GEM DETECTOR SECTION (B-B)
SSC
G00-000 018

PHASE 14

INSTALL MUON [redacted]

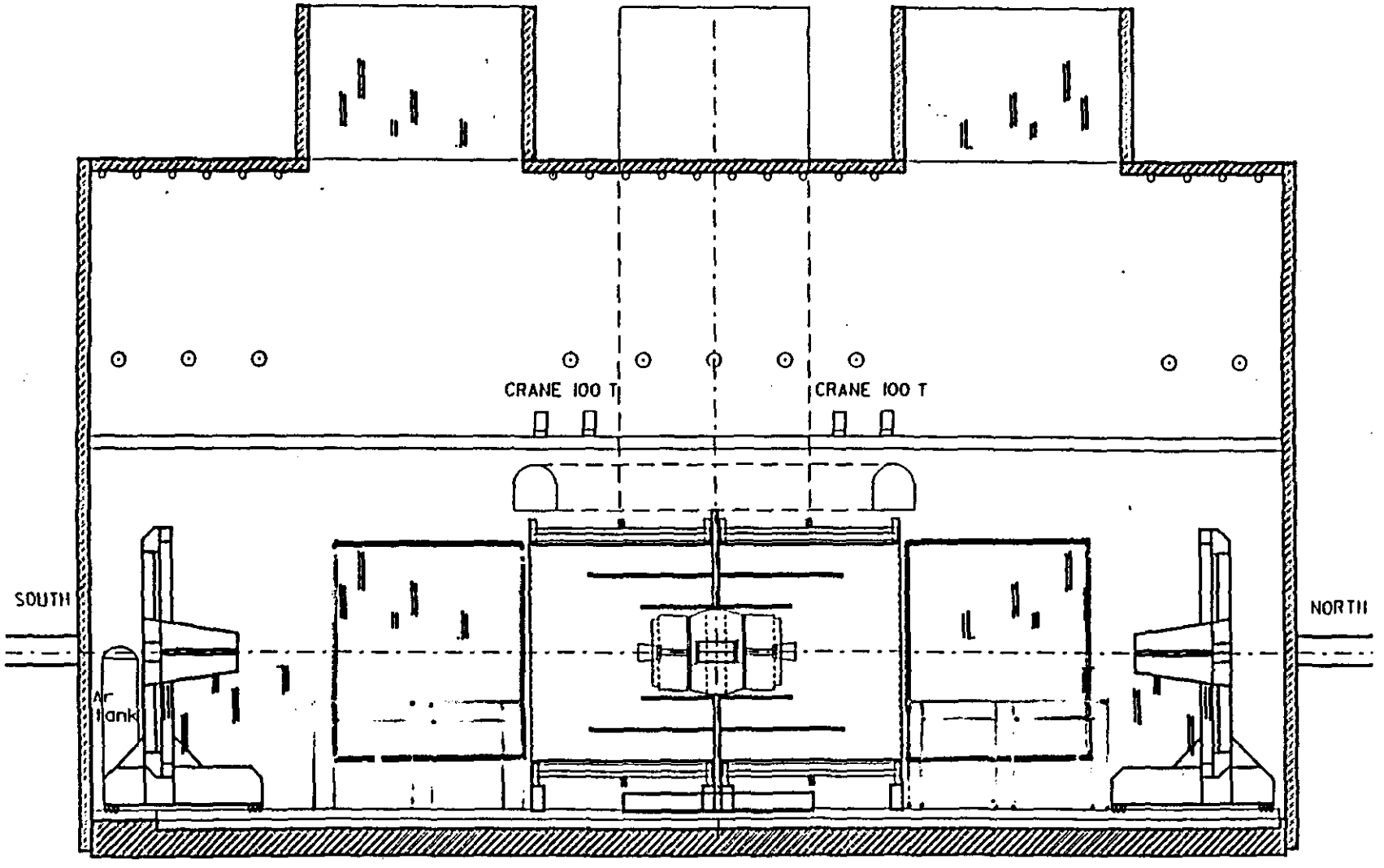

BIG WHEEL

ADVANTAGES

- Alignment at design orientation
  - From the interaction point
  - Effect of the magnet deformation corrected
- Installation in the experimental hall in 2 weeks
  - Not included gas+electr.connections
  - Not included final alignment
- General schedule improved - Muon people downstairs only some weeks instead of some months
- Muon assy bldg required only for chamber storage + gas and electronic tests - Size reduced
- No module storage required
- Big wheel fixed at the most stable points of the magnet
- Local schedule improved :Possibility to install μ chambers at different place in the same time
- Fabrication cost reduced - Comparison to ~~32~~ 64 modules

DISADVANTAGES

- No prototype
- No way to remove any chambers (barrel or endcap)
- Price of the big outside crane to rent
- All the chambers must be install in 4 months (4 places)
  - Storage and tests to be re-evaluated
  - Fabrication planning

UNKNOWN~~S~~

- Effect of the rotation
- overall stability interaction with alignment

CONCLUSION Faisability study to be done in 2months max.

PRD/JPA
6/8/92

Action Item Update/All

Action Items, Muon Eng Status Meeting-update 6/10/92

Action Item# (5/20 mtg)	Action Item	Assignee	Due Date	Notes
5-20-1	We need interface drawings specifying stay-clear regions between magnet and support structure and calorimeter. Drawings are also needed to specify the chamber mounting concept. What support structure is needed for the barrel (graphite frame as envisioned fot the RPC.)	F. Nimblett	TBD 6/3	Nimblett to generate a list of required info. Letter to be sent on 5/28 to Harris/Sanders. Reqest info available 6/3. Som info sent. On-going to TDR.
~~5-20-2~~	~~It was suggested that the barrel chamber configuration be changed to 4:8:4 for costing. The resolution performance will also have to be evaluated for this configuration.~~	~~A. Kondoleon~~	~~5/27~~	~~Complete~~
5-20-3	The details of the chamber coverage needs to be worked out in the region between sectors. For the PDT's, how many tube layers will there be in that reqion, and what is the dead space? For the LSDT's, what is the dead space in that region? We need blow-up drawings of this corner, indicating the attachment of the chambers and the dead space.	F. Nimblett	5/27	In process-Kelsey to provide drawings
~~5-20-4~~	~~We need to get the deflection specification of the cryostat. How much out of round, stability of the length of the magnet.....Suggest that the requested information be written in a memo and sent to Mike Harris, Livermore, Mike Marx~~	~~F. Nimblett~~	~~5/28~~ ~~6/3~~	~~Draft to be presented 5/27. To be sent on 5/28. Info needed 3-Jun~~
5-20-5	~~Are there any structural members in the present space frame design which bare no load?~~	~~M. Furey~~	~~5/27~~	~~None. Complete~~
5-20-6	Reaction to Jacques Pier-Amory's proposal for installation of chambers. Practical?, Cost effective?	A. Kondoleon		On-going

These Items connected

Action Item#	Action Item	Assignee	Due Date	Notes
5-20-7	What savings will result from construction of the FFS using non-tapered iron plates? What is the results of the resolution, L-angles, nonuniform magnetic field?	J. Sullivan	TBD	On-going. It appears manufactorir requires taper.
~~5-20-8~~	~~We need to review the need for removing chambers? Should this be a design goal? What is the associated cost to build in this feature?~~	~~A. Kondoleon~~	~~TBD~~ ~~6/5~~	~~For CSC mandatory. Depends upon technology. Discussions at muon mtg on 6/5; YES~~
5-20-9	~~For alignment, there is a need to specify the dynamic range needed for the straightness monitors. Photopots may not work in the B field. Need another technology.~~	~~J. Paradiso~~	~~5/27~~	~~Discussions on-going w/SDC 2mm dynamic raange of the quad cell baseline.~~
5-20-10	~~A decision has to be made soon about what alignment apparatus we should have for the TTR this summer. The May 22 meeting should focus on this issue.~~	~~J Paradiso~~	~~5/27~~	~~Per FET, this action will only be a transfer of information.~~
5-20-11	~~The technology proponents are requested to supply updated cost information by May 22. May 27 is the deadline by which info has to be sent to SSCL.~~	~~R. Gustavson~~	~~5/27~~	~~Completed~~
5-20-12	~~A need has been indicated for a master organizational chart for the Muon sub system.~~	~~H. Baker~~	~~5/27~~ ~~6/5~~	~~1st Draft delayed to following week. Latest version shown at mtg, 6/10. Await Harris' response.~~

Action Items, Muon Eng Status Meeting-update 6/10/92

Action Item# (5-27 mtg)	Action Item	Assignee	Due Date	Notes
~~5-27-1~~	~~Provide draft input to TRD~~	~~J. Paradiso~~	~~5/29~~	~~Complete~~
5-27-2	Provide baseline drawing of alignment concept. Determine quantization.	J. Paradiso	PAC mtg	On-going
**********				
(6-10 mtg)	Following A/Is are due post PAC mtg; allow approach for mtg to proceed.			
6-10-1	Evaluate feasibility of improving theta acceptance for the LSDT chamber option.	J. Kelsey	Post PAC meeting	L. shape structural support piece is in the way. Make it smaller an if possible, a better fit with the space.
6-10-2	Chamber end gap=150mm. Send letter to Harris with copies toMarx, Deis, Johnson, Pohlen to voice concern over this and recommend that the gap stay where it is at a minimum	F. Nimblett	Post PAC meeting	
6-10-3	Explain rationale for selecting a 16-fold symmetry.	F. Nimblett	Post PAC meeting	
6-10-4	Letter Marx to indicate concern over the approach of splittir up the muon system and promoting a scenario which takes the whole endcap moun system out with the FFS, perhaps even permanently attached to the FFS.	F. Nimblett	Post PAC meeting	