GEM TN-92-106

Muon Engineering Status Meeting - M.I.T.

May 20, 1992

Abstract:

Agenda, attenders, and transparencies of the GEM Muon Engineering Status Meeting held at M.I.T. on May 20, 1992. Agenda items: Comments; Draper Management Information; Muon System Design: Structures, Chambers, and PDT Chamber Design; Alignment; Cost Book; and Action Items

Attendees List

May 20 GEM μ Engineering Meeting

Name	Phone	E-mail
Scott Whitaker	(617) 553-8918	[illegible] SCOTT
Louis S. Osborne (MIT)	(617) 253-2396	osborne@MITLNS
Howard BAKER (Draper)	(617) 258-3411	hbaker@draper.com
[illegible]	(214) 705 [illegible]	[illegible]
Jacques GOVIGNON	(617) 258-3866	JQG4946@DRAPER.COM
Andrey Korytov	617-258-5460	KORYTOV@MITLNS
Frank Nimblett	617-258-1393	NIMBLETT@DRAPER.COM
Mike Marx	214 708 6188	SSCVX1::marx
[illegible]	[illegible]	[illegible]
MIKE DEPIERO	617-258-2775	[illegible]
MARTIN [illegible]	617-258-4662	[illegible]
Anthony Kondoleon	617-258-1537	Kondo@DRAPER.COM
Jim Kelsey	617-253-2069	Kelsey@MITLNS
Joe Pohlen	303 971 9584	SSCVX1::Pohlen
Frank Taylor	617-253-7249	MITLNS::FET
Ed Womble	617-258-2909	Womble@Draper.com

Agenda
20 May 1992

MAIL>
#7 19-MAY-1992 09:03:55.12 NE
Agenda

Comments.....F. Taylor
Draper Management info.....H. Baker
Muon System Design.....F. Nimblett
------Structures
------Chambers
------PDT Chamber design
Alignment.....J. Paradiso
Cost Book.....D. Gustafson
Action Items.....Taylor/Baker

Jacques Pier-Thierry / assembly & installation options

F. Taylor/M.I.T.

List of Muon System Engineering Tasks:

Level I:

(deals with chambers in the muon system)

(1) Work out details of chamber engineering:
- mounting scheme
- collection of drawings for each chamber
- details of cost estimates for each technology

(2) Alignment matrix down to wire level documented for each technology

(3) Specification of gas system for each technology

(4) Specification of cabling needs for each technology

Level II:

(deals with the support structure, alignment system..)

(1) Details of the support structure:
- kinematic mounts
- deflection and stress analysis
- attachment to the cryostat or support legs of magnet
- thermal analysis

(2) Develop chamber alignment scheme
- integration to chamber technologies
- integration to GEM muon alignment system

(3) Details of chamber mounting scheme:
- design of actuators with feedback
- define connections with alignment system

(4) Document the material versus angle:
- calorimeter
- muon support frame
- muon chamber overlap
- electronics packages

(5) How to cover the region between the barrel and endcaps?
- nonprojective support structure?
- additional chambers in between?

(6) How to get to small angles?
- down to 9.46 degrees (eta = 2.5)

(7) How to cover the region between sectors in the barrel?

(8) Review the central membrane problem

(9) Integrate the alignment system with the support structure and chamber mounts.

(10) Evaluate system performance:
- location of chambers
- overlap material => multiple scattering

(11) Details of fabrication and assembly of support structure:

(12) Cost estimate for support structure, alignment system, interface hardware.

Level III:

(deals with the integration with rest of GEM, support bldgs..)

(1) Develop assembly/installation procedures
    support structure
    chambers on support structure
    sectors in magnet

(2) Details of integration of muon system with rest of GEM:
    local alignment connected to global alignment
    cable routing
    integration of gas system with GEM

(3) Define muon system support facilities:
    muon assembly bldg.
    tranportation
    assembly/installation fixtures

H. Baker/Draper

GEM Muon System

Management Status/Issues/Plans
20 May'90

- Howard (Howie) W. Baker/Draper joined the Muon management team on Wed, 13 May'92
  - Bus tel: (617) 258-3411/on voice mail/any length
  - Home: (617) 876-1528 on answer machine(Cambridge)
  - Fax: (617) 258-1333
  - E-Mail: hbaker@draper.com

- Spending time familiarizing with program

- Near term Goals (you pick priority,after 1st bullet)
  - Work very closely w/Frank Taylor

  - Establish lines of management/communication (internal/external) to Draper

  - Process latest SSCL/Draper proposal effort

  - Stabilize Draper team organization (see org chart)
    - Identify team members
    - Review SOW/fiscal support w/team

  - Place entire Draper effort (Muon) under a Mac based project management control program
    - MacProject II
    - First cut ~ 27 May (top level)
    - Refined from that point

  - In concert with milestones in MacProject plan, a separate schedule of meetings, presentations, deliverables, etc.

GEM Muon System Engineering Organization
Draper Activities

Rev 5/19/92

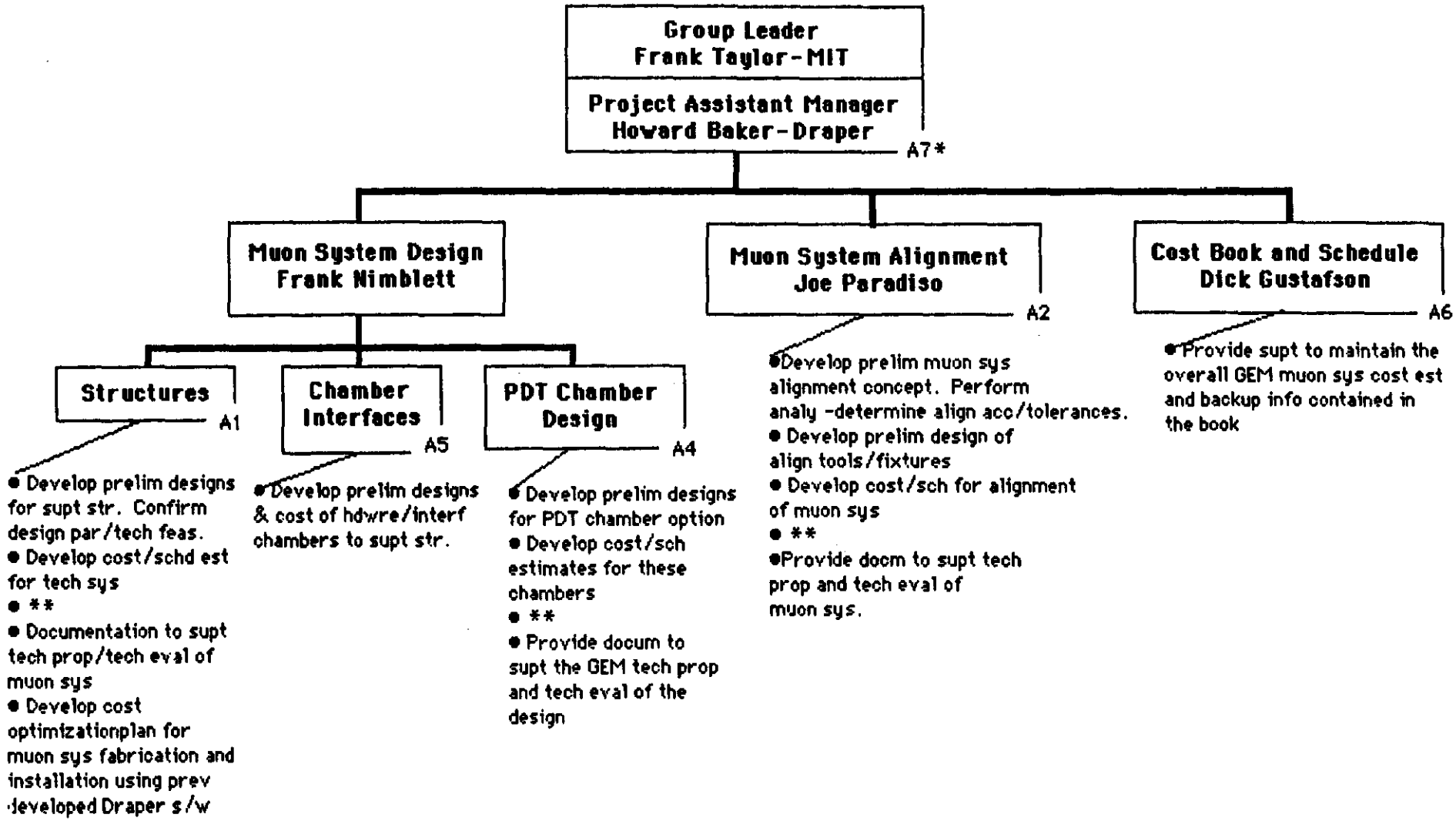

*A's refer to SOW paragraph; ** Provide to GEM muon cost/schedule coordinator for roll-up into muon mastercost estimate

M. DePiero/Draper

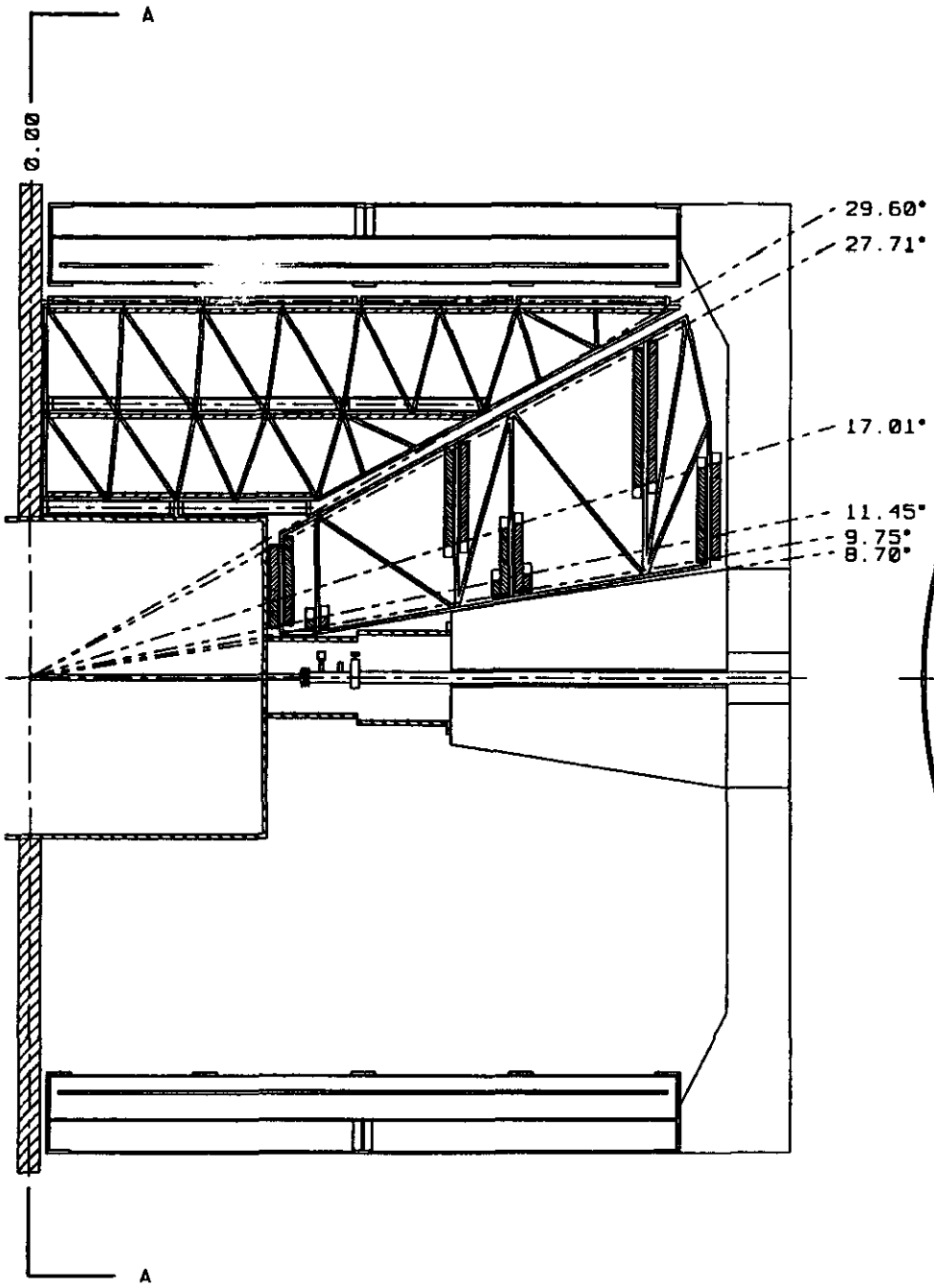
A
0.00
29.60°
27.71°
17.01°
11.45°
9.75°
8.70°
A

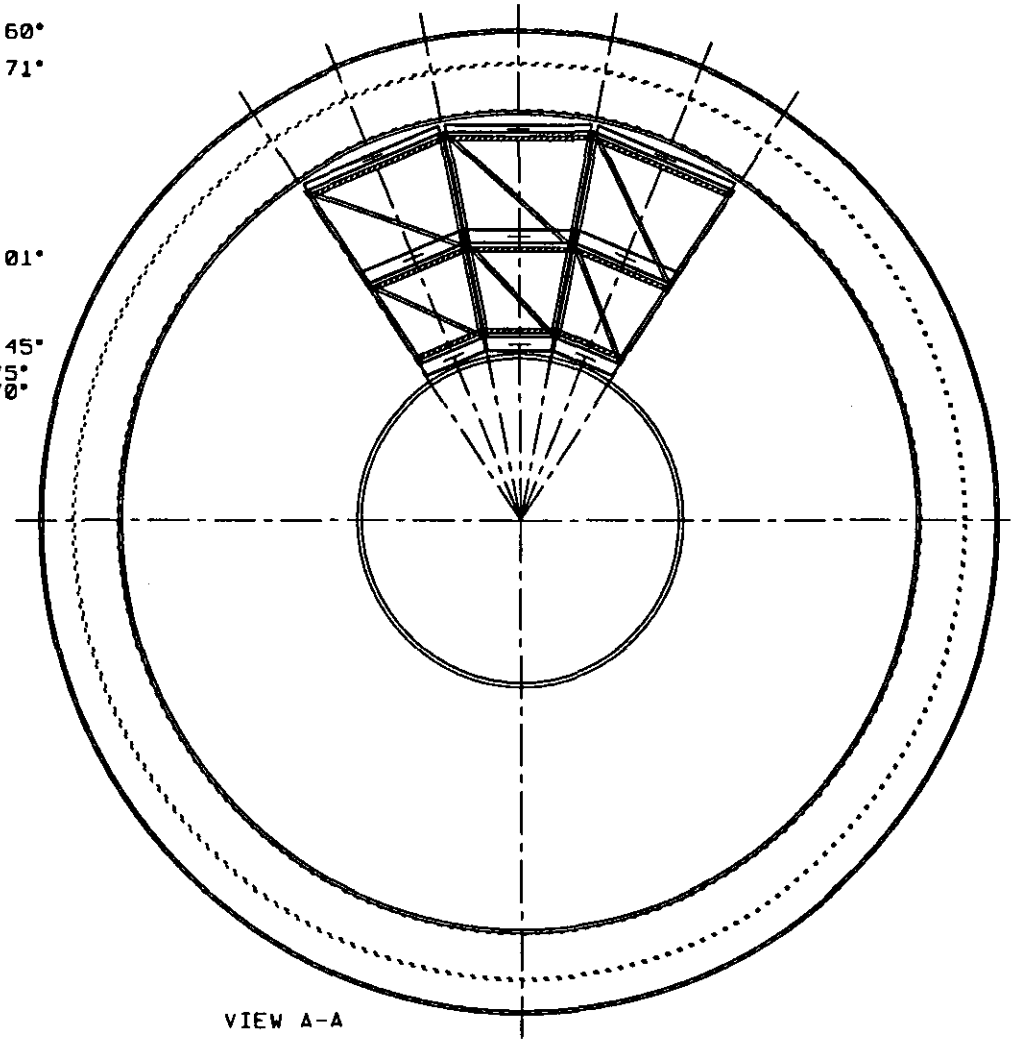
VIEW A-A

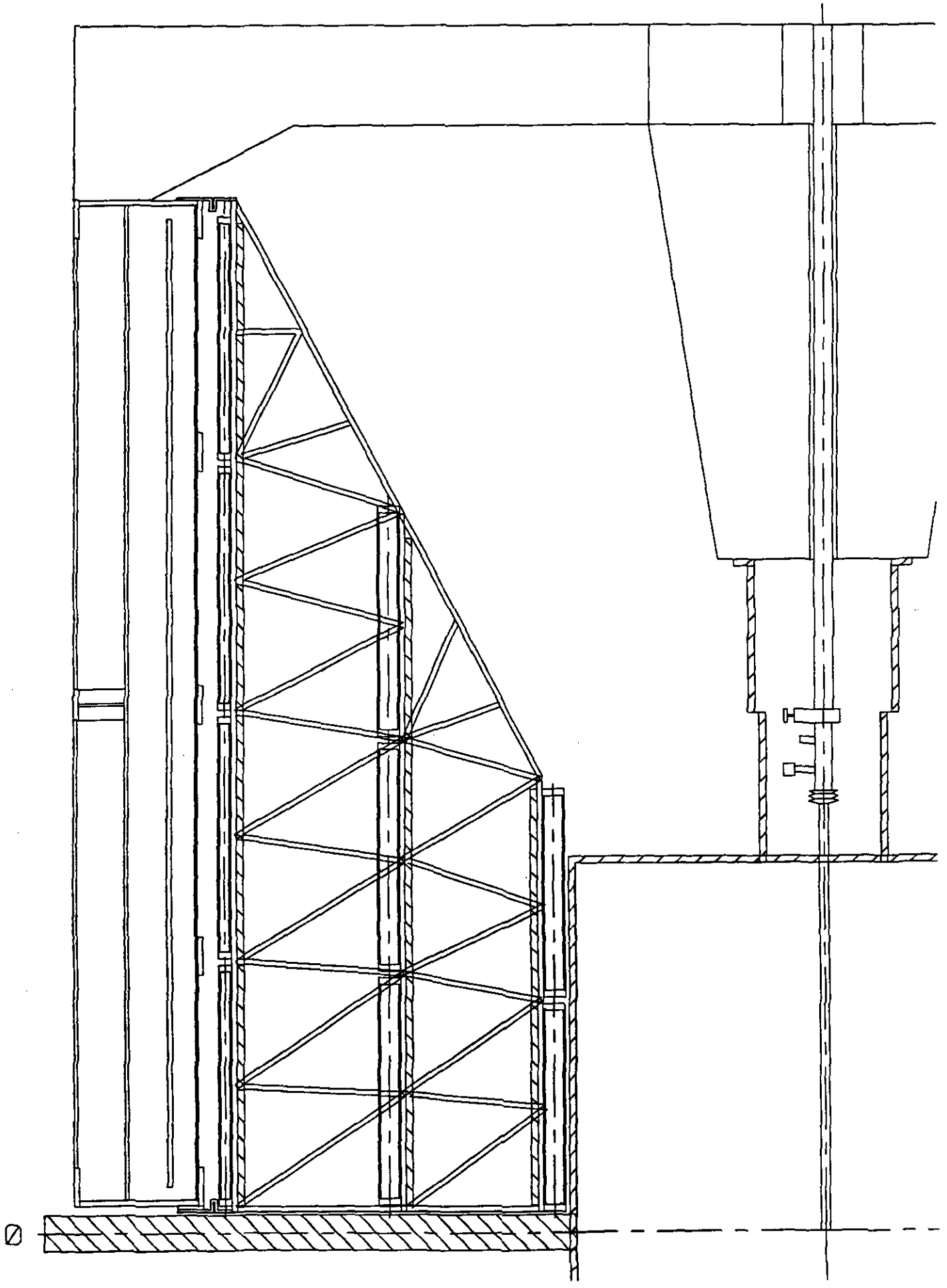
Ø

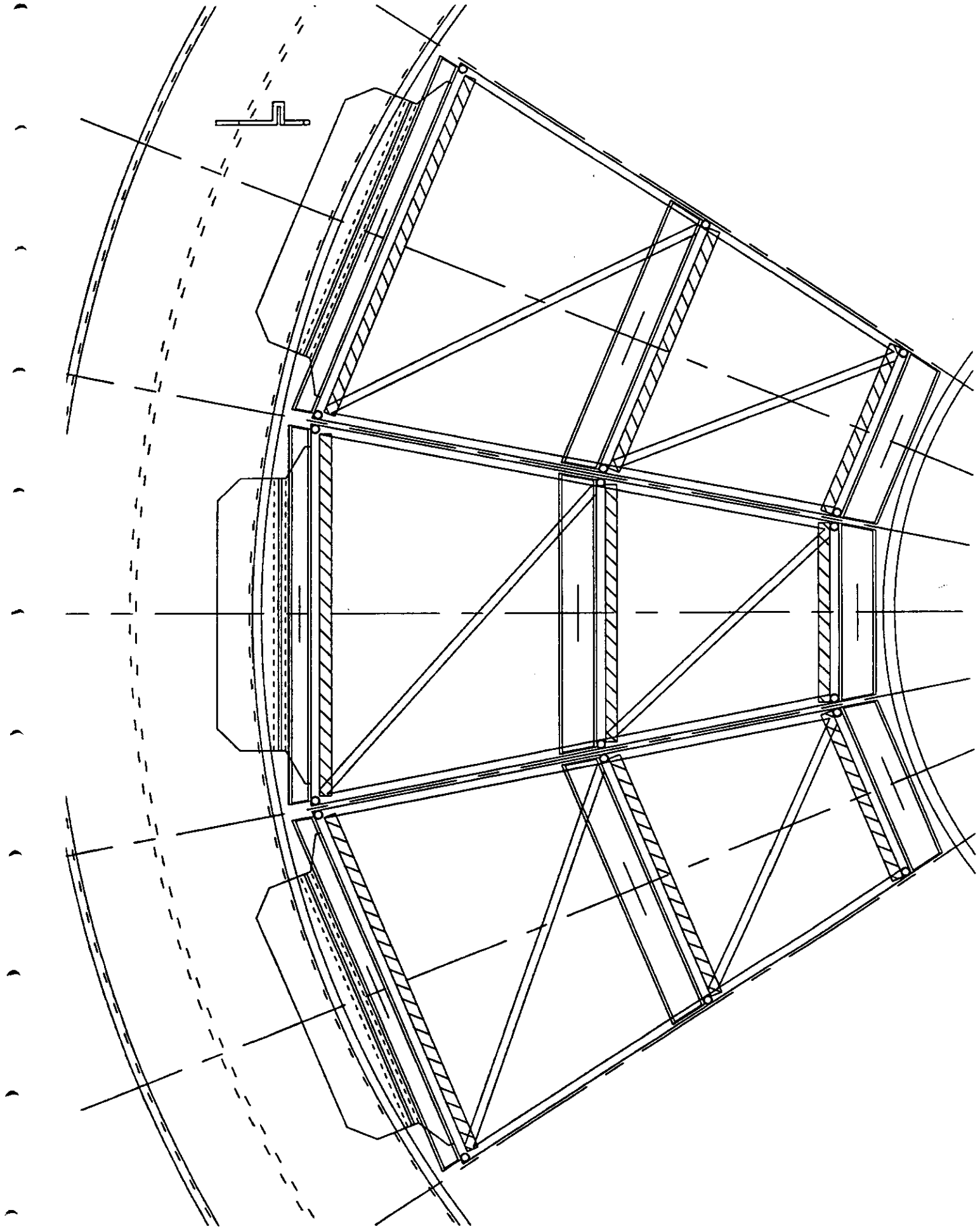

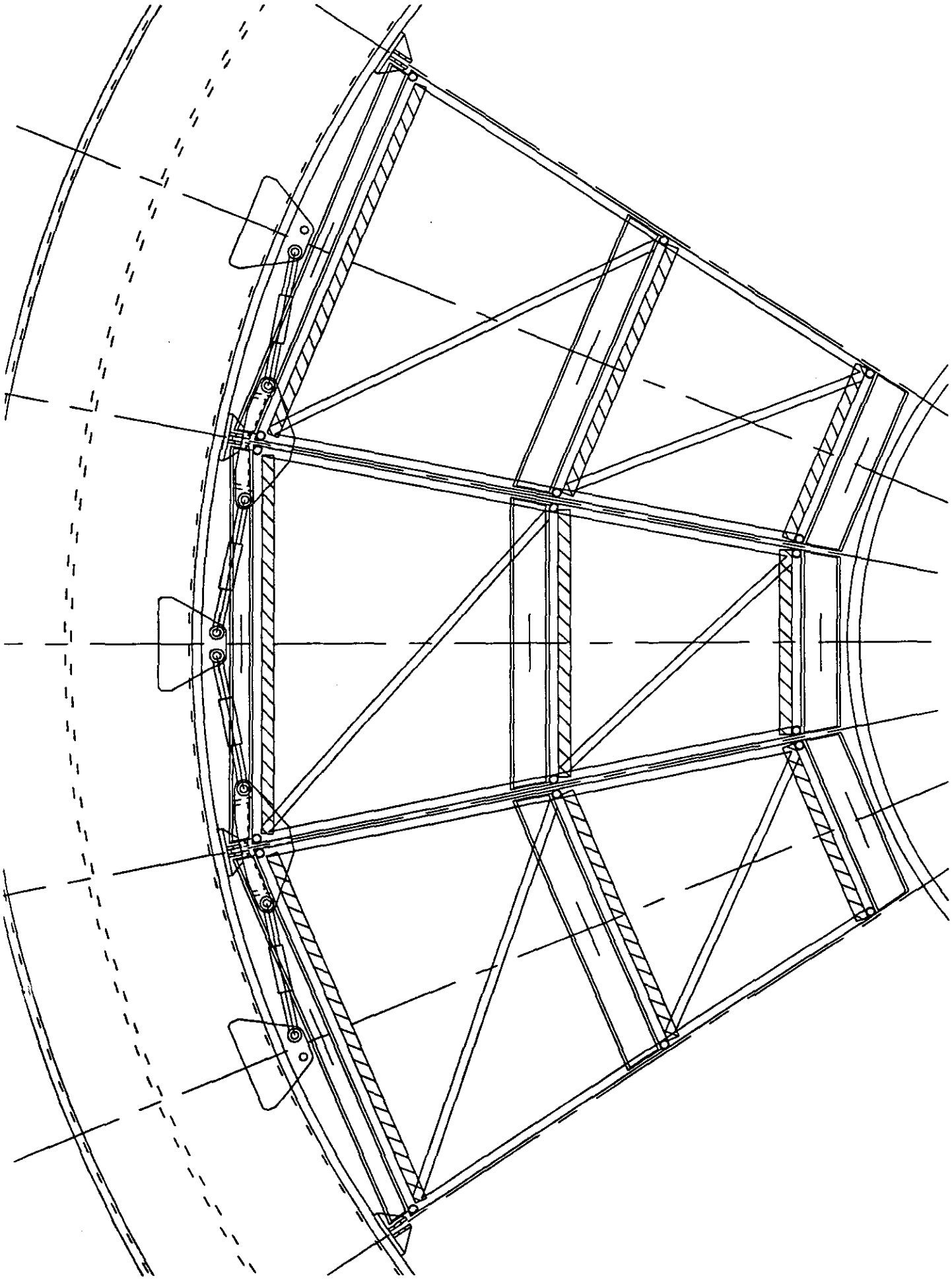

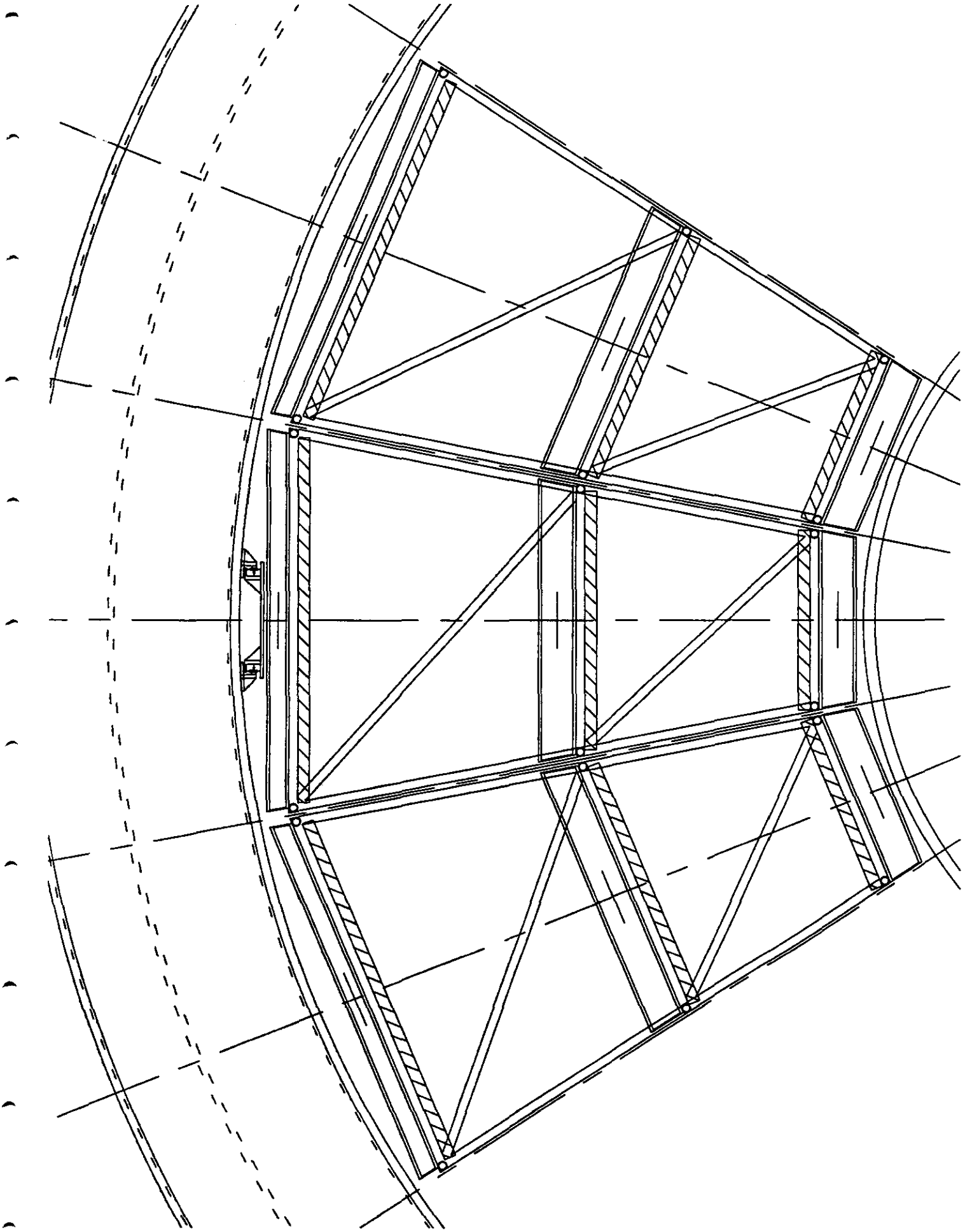

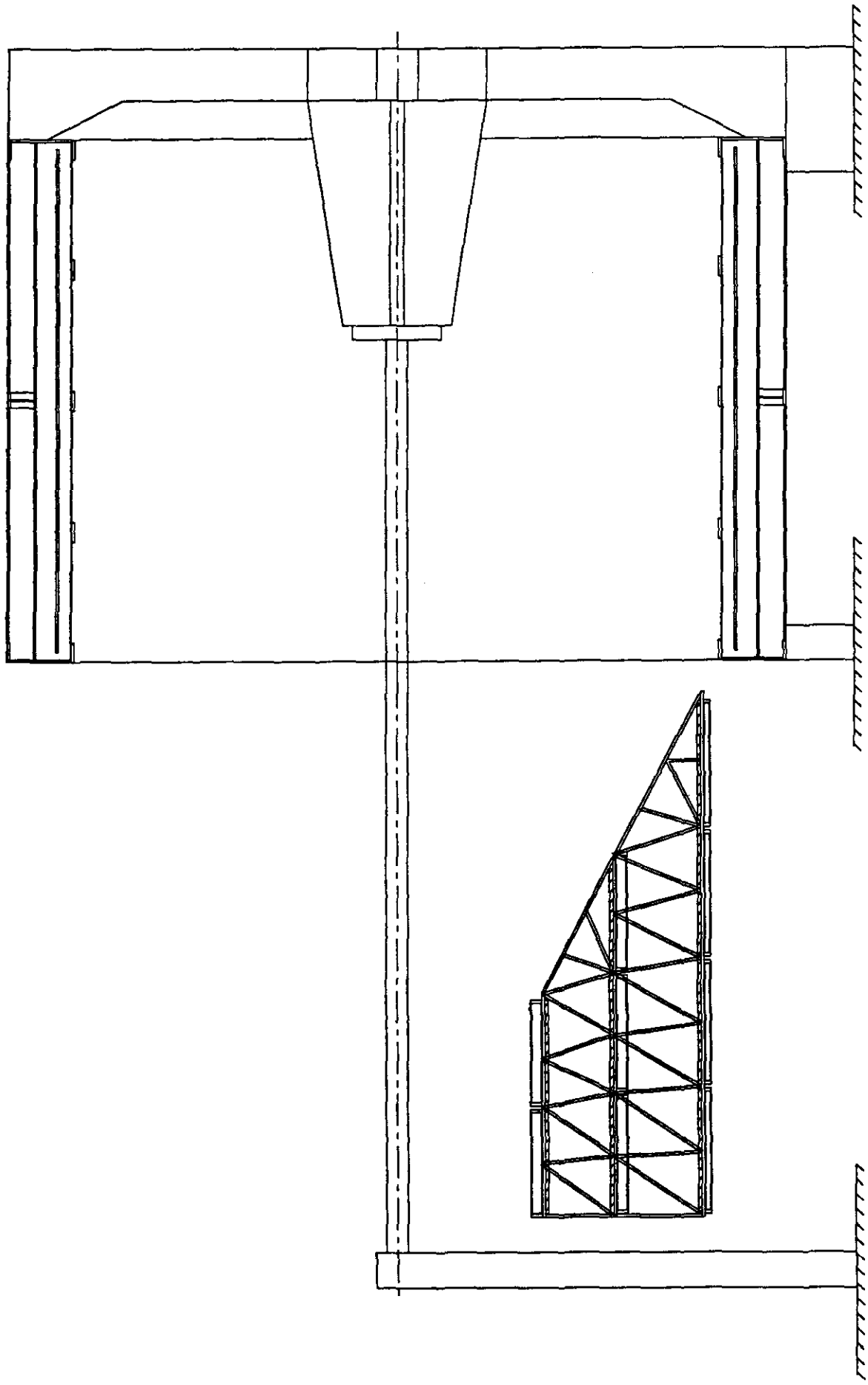

M. Furey/Draper

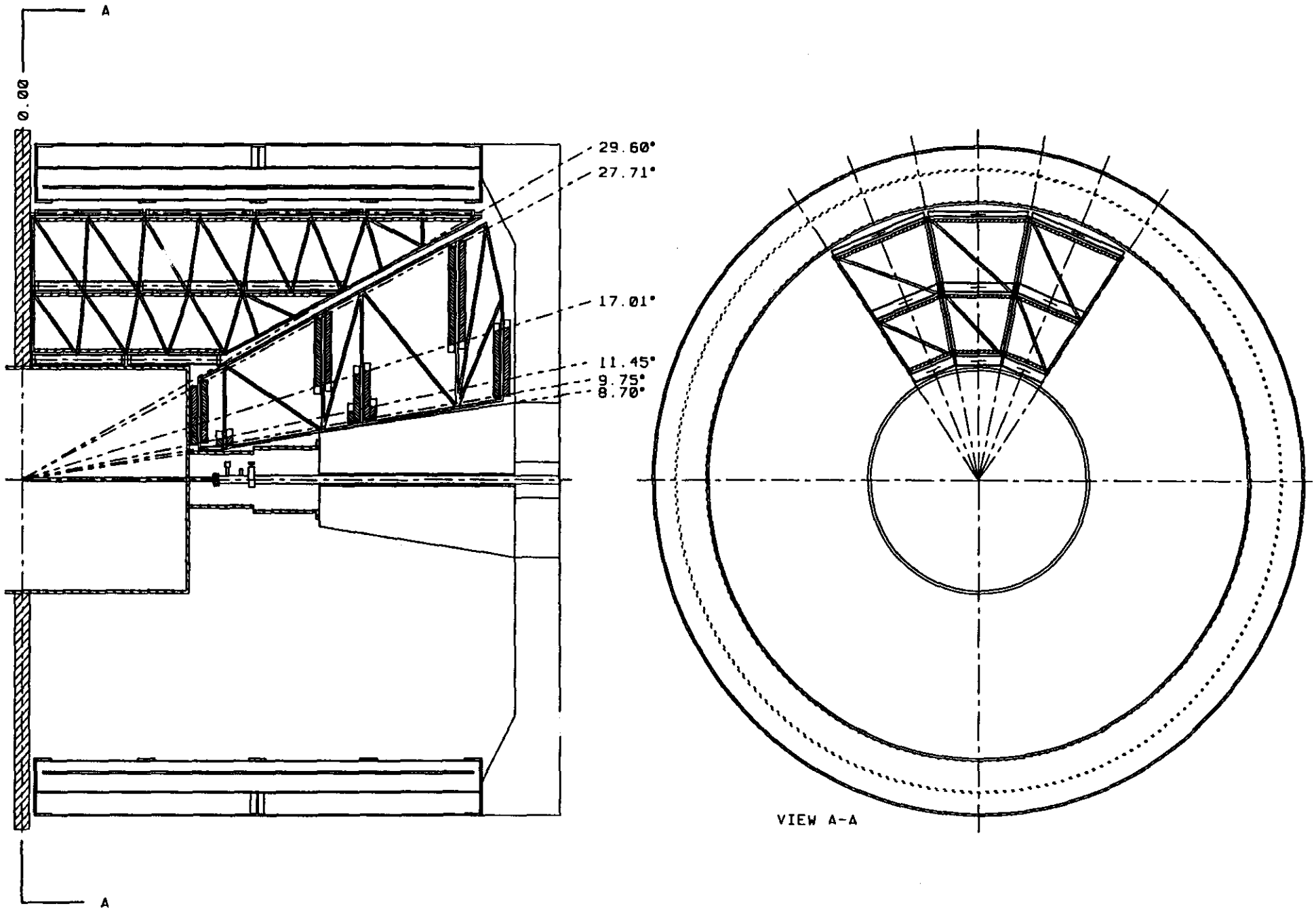
A
0.00
29.60°
27.71°
17.01°
11.45°
9.75°
8.70°
A
VIEW A-A

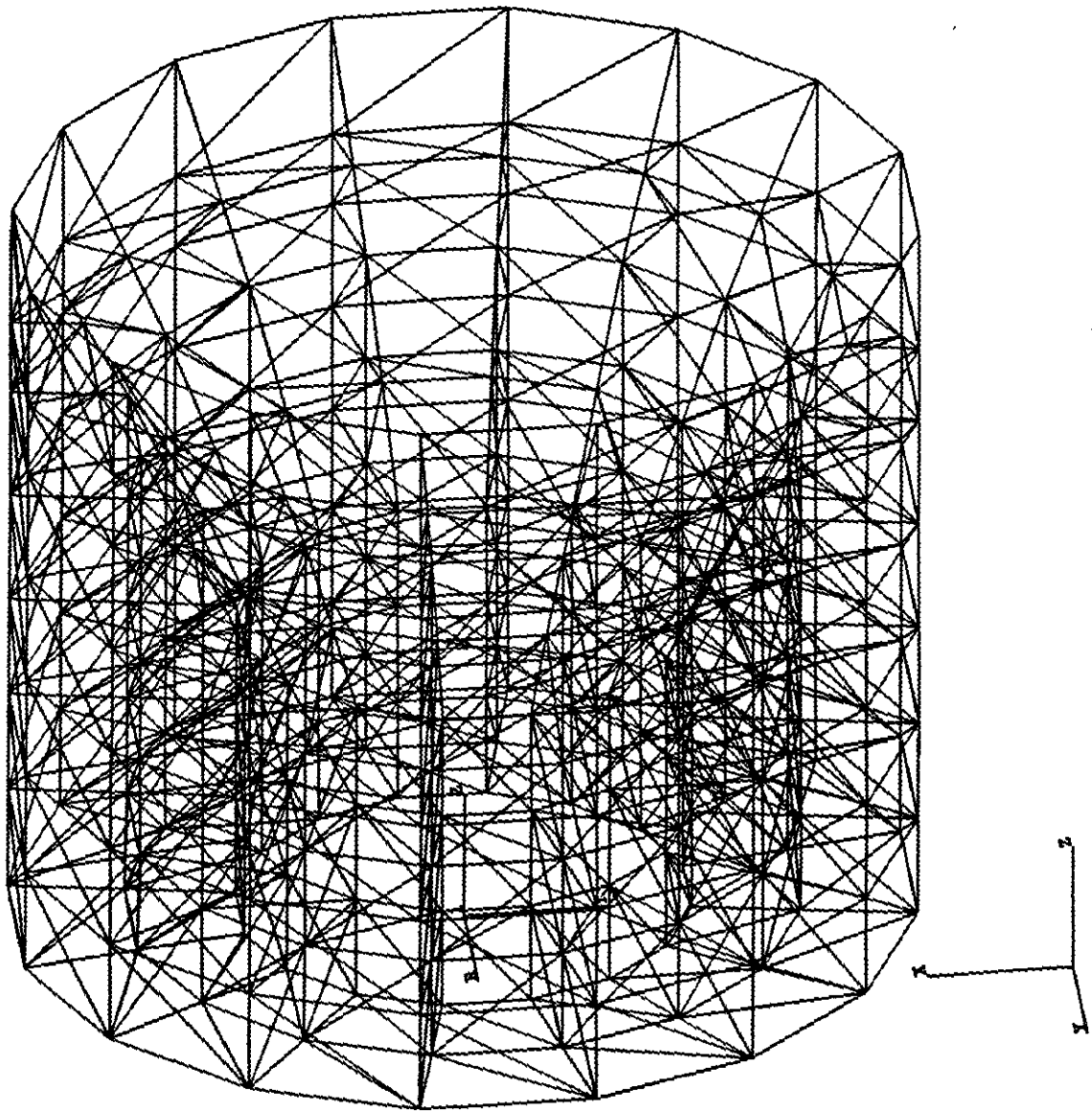

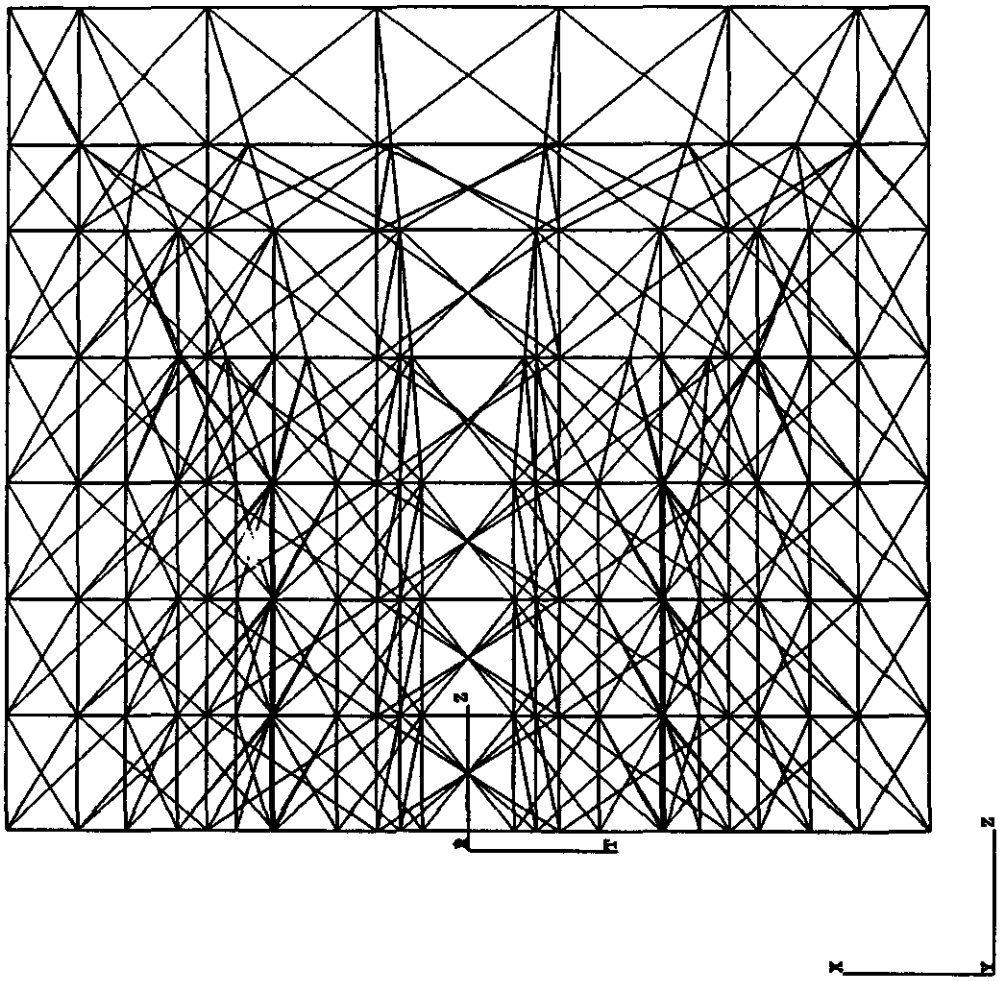
Z
Y
X
Z
Y
X

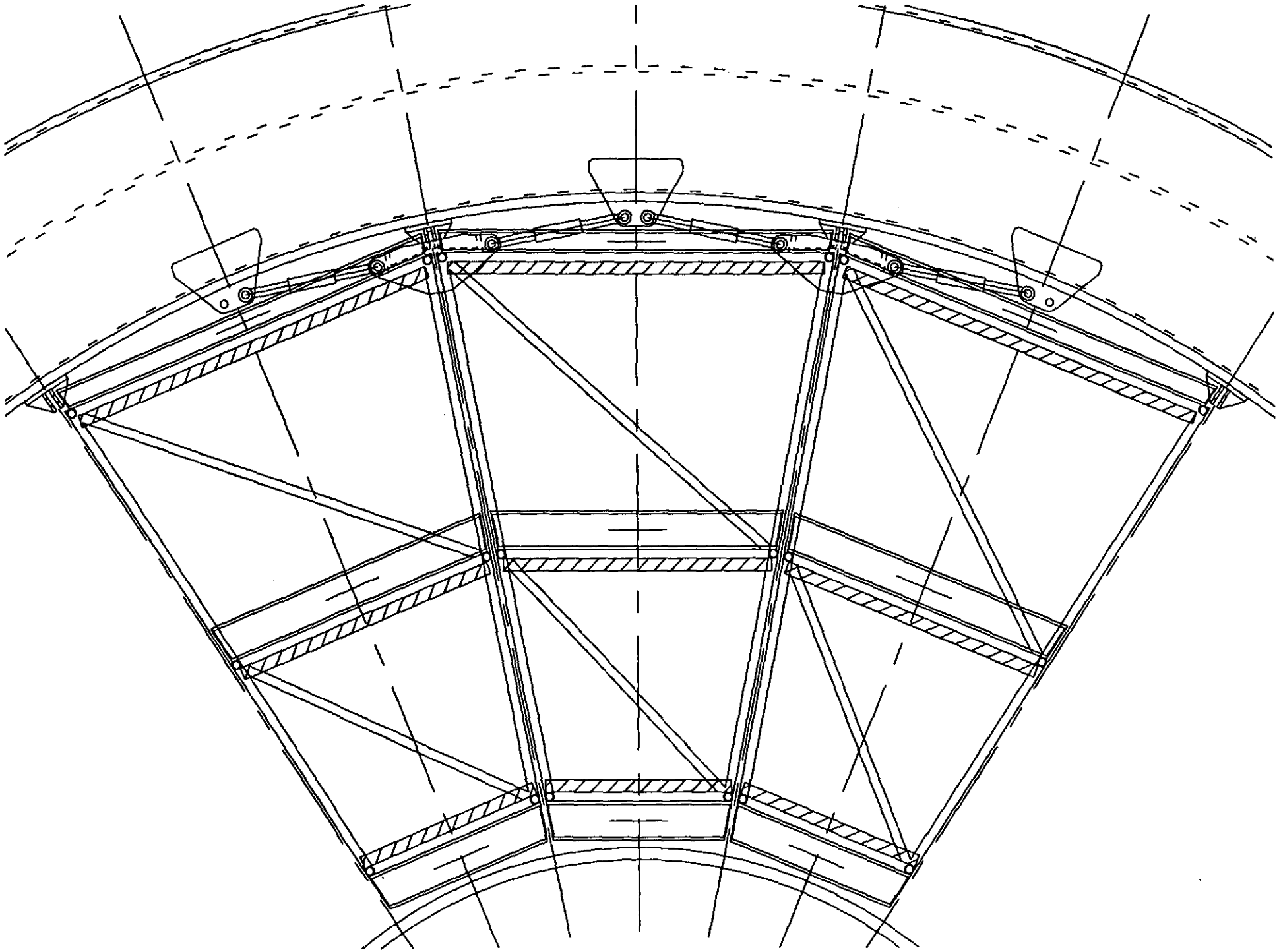

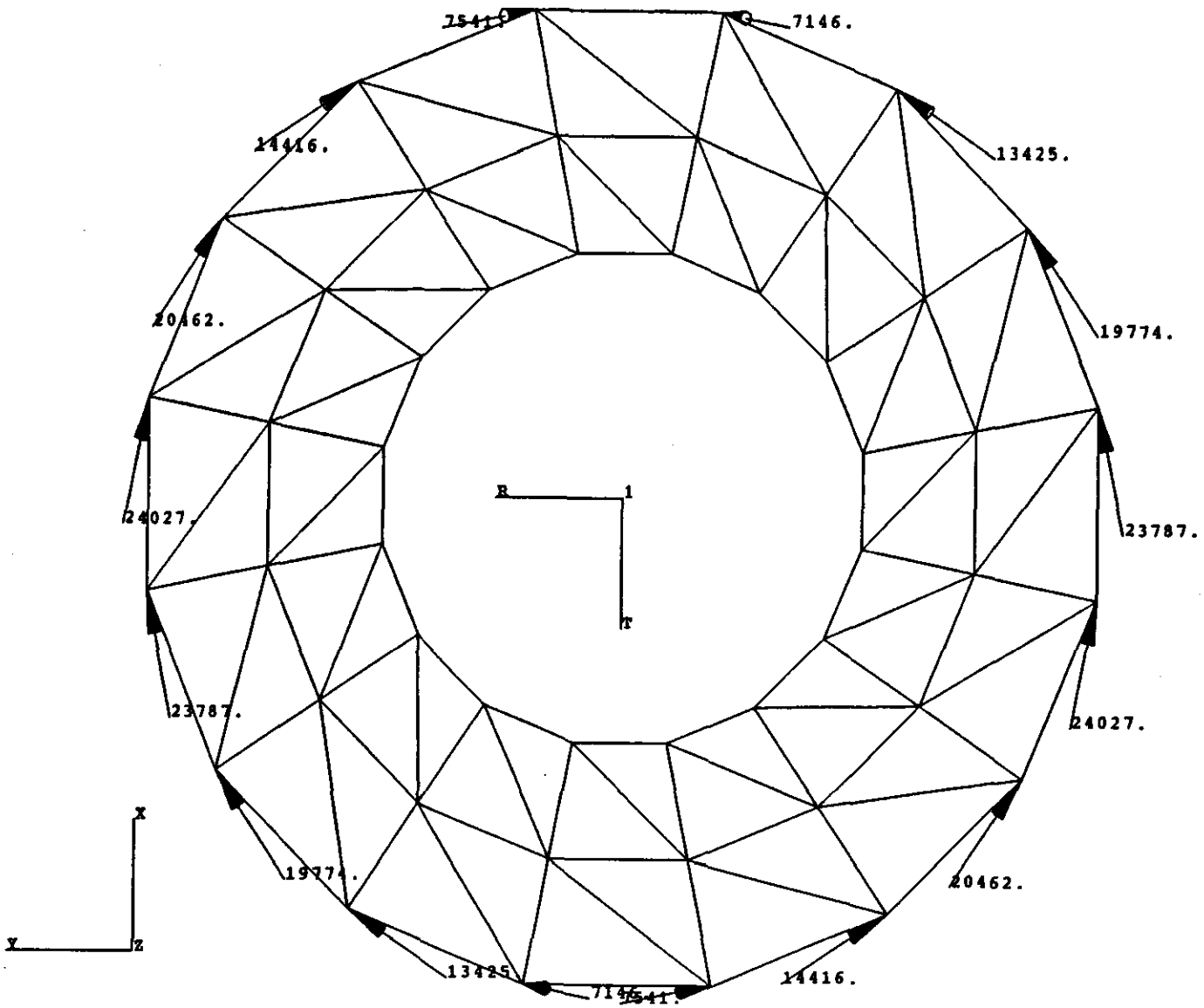
7541.
7146.
13425.
19774.
23787.
24027.
20462.
14416.
7541.
7146.
13425.
19774.
23787.
24027.
20462.
14416.
R
1
T
X
Y
Z

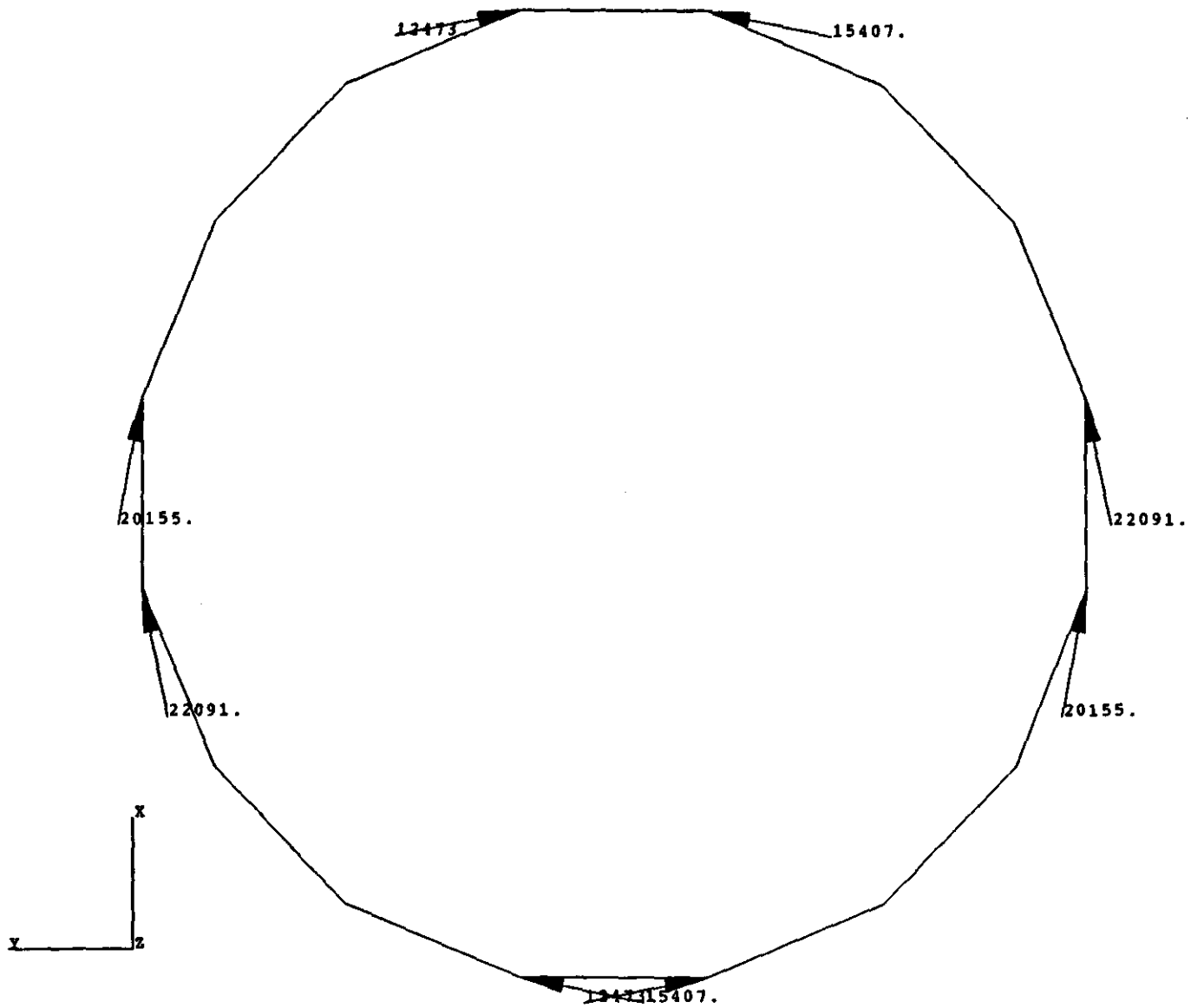
12473.
15407.
20155.
22091.
22091.
20155.
15407.
X
Y
Z

1

SSC
19-MAY-92 15:20:08
1 G LOAD IN THE -X DIRECTION
1 G GRAVITY LOAD
SORTED 20 VALUES IN COLUMN 5 OF FILE sub1.bem.2
SORTED IN DECREASING ORDER BY ABSOLUTE VALUE

ELEMENT ID --- SORTED QUANTITY LISTED BY COLUMN NUMBER.
FIRST LEFT TO RIGHT, THEN TOP TO BOTTOM.

ELEMENT	VALUE	ELEMENT	VALUE	ELEMENT	VALUE
1414	0.14385E+05	1414	0.14385E+05	592	-0.14385E+05
592	-0.14385E+05	487	-0.14286E+05	487	-0.14286E+05
1312	0.14286E+05	1312	0.14286E+05	867	-0.13838E+05
867	-0.13838E+05	136	0.13838E+05	136	0.13838E+05
968	-0.12991E+05	968	-0.12991E+05	128	0.12991E+05
128	0.12991E+05	1517	0.12299E+05	1517	0.12299E+05
695	-0.12299E+05	695	-0.12299E+05		

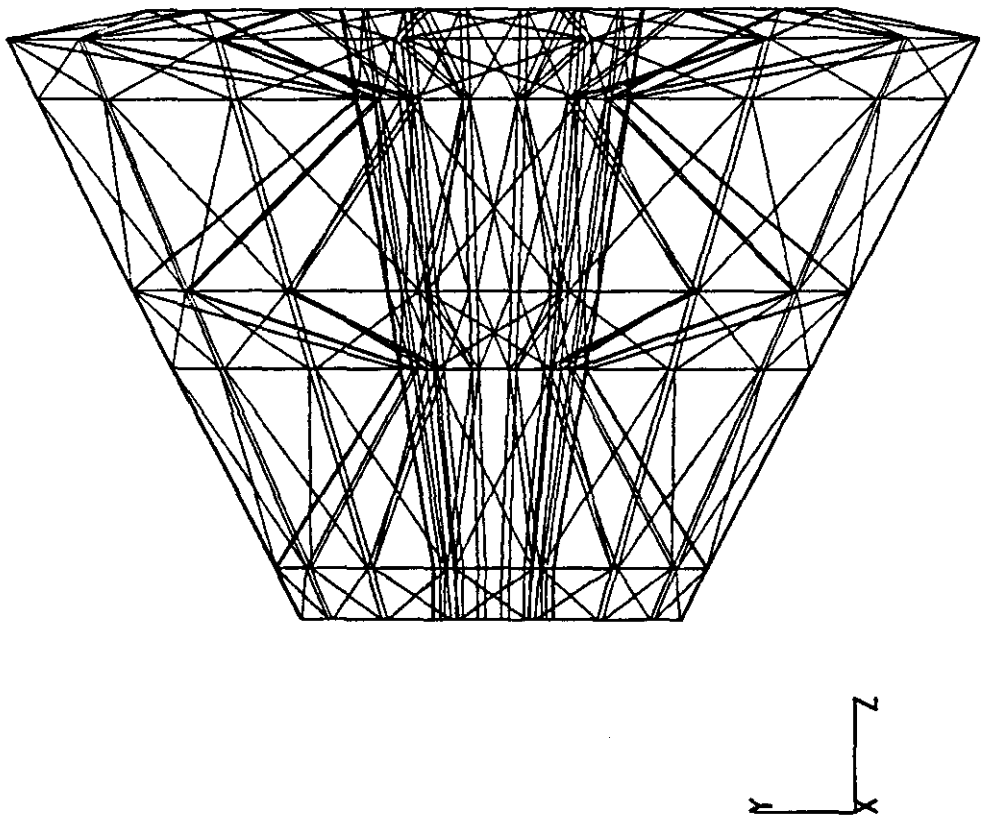
Z
X
Y

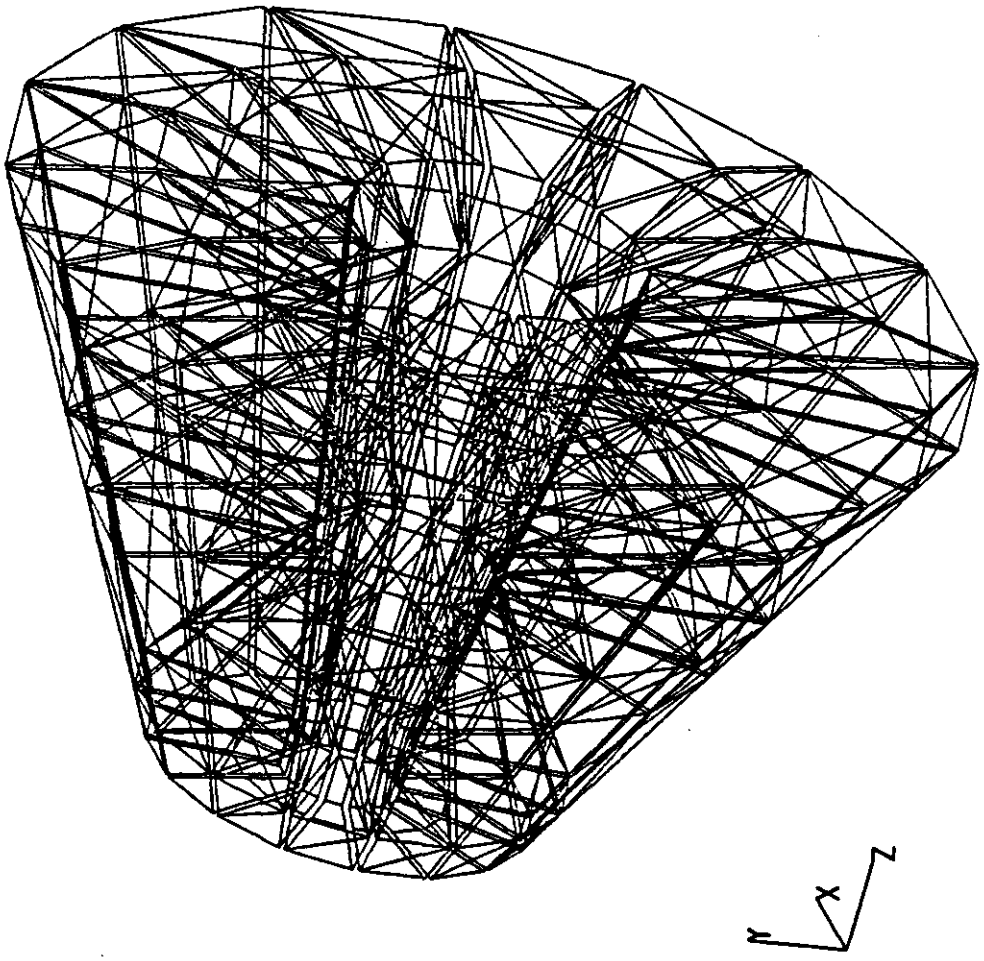
Z
X
Y

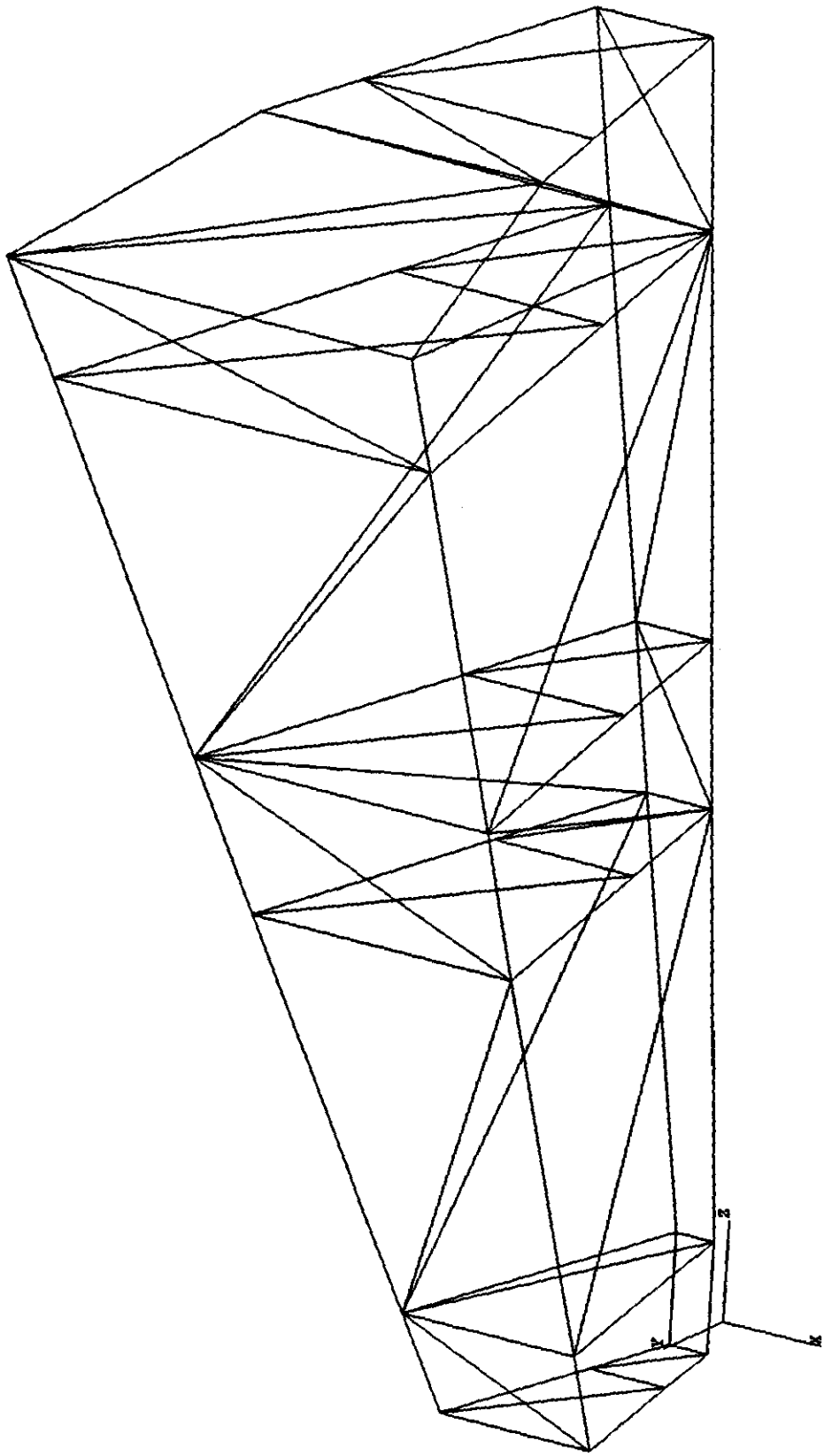
Z
Y
X

A. Kondolean/Draper

MUON SUPPORT STRUCTURE COST STATUS

A. KONDOLEON

DRAPER LAB.

MAY 20 1992

WORK IN PROGRESS AT PRESENT TIME

1. REVISING COST ESTIMATES FOR NEW RATES & PROCEDURES

2. DEVELOPING COST MODEL FOR PDT CHAMBER PRODUCTION

   A. OVERALL ASSEMBLY STEPS FOR CHAMBER

   B. MACHINING STEPS FOR END PLATE MANIFOLDS

3. METHOD FOR REMOVING CHAMBERS FROM DETECTOR WITHOUT REMOVING ENTIRE MODULE

4. GAS SYSTEM ESTIMATE FOR MUON SYSTEM

Network Diagram Report
pdt production-hr

Current Date: 05/20/92

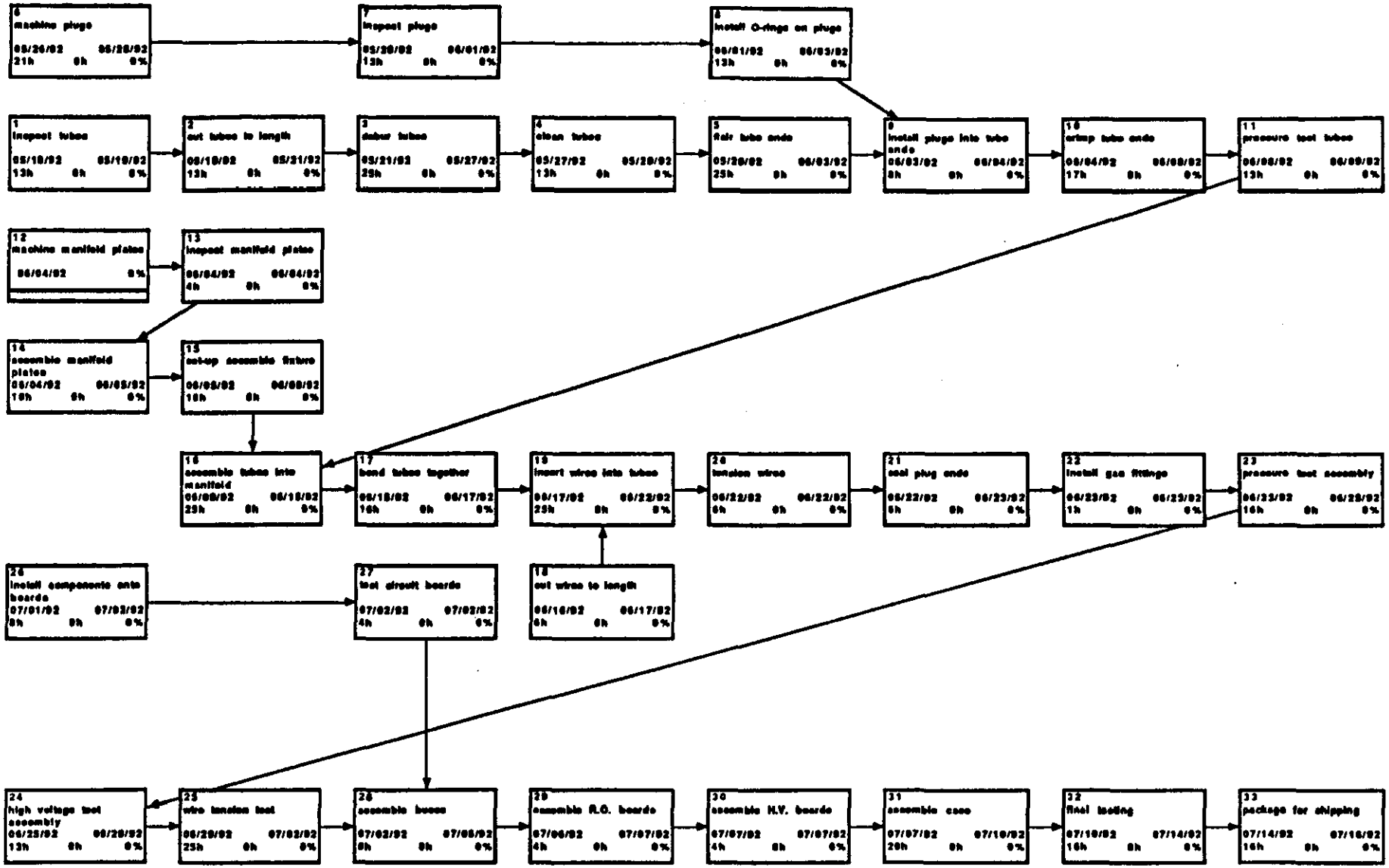

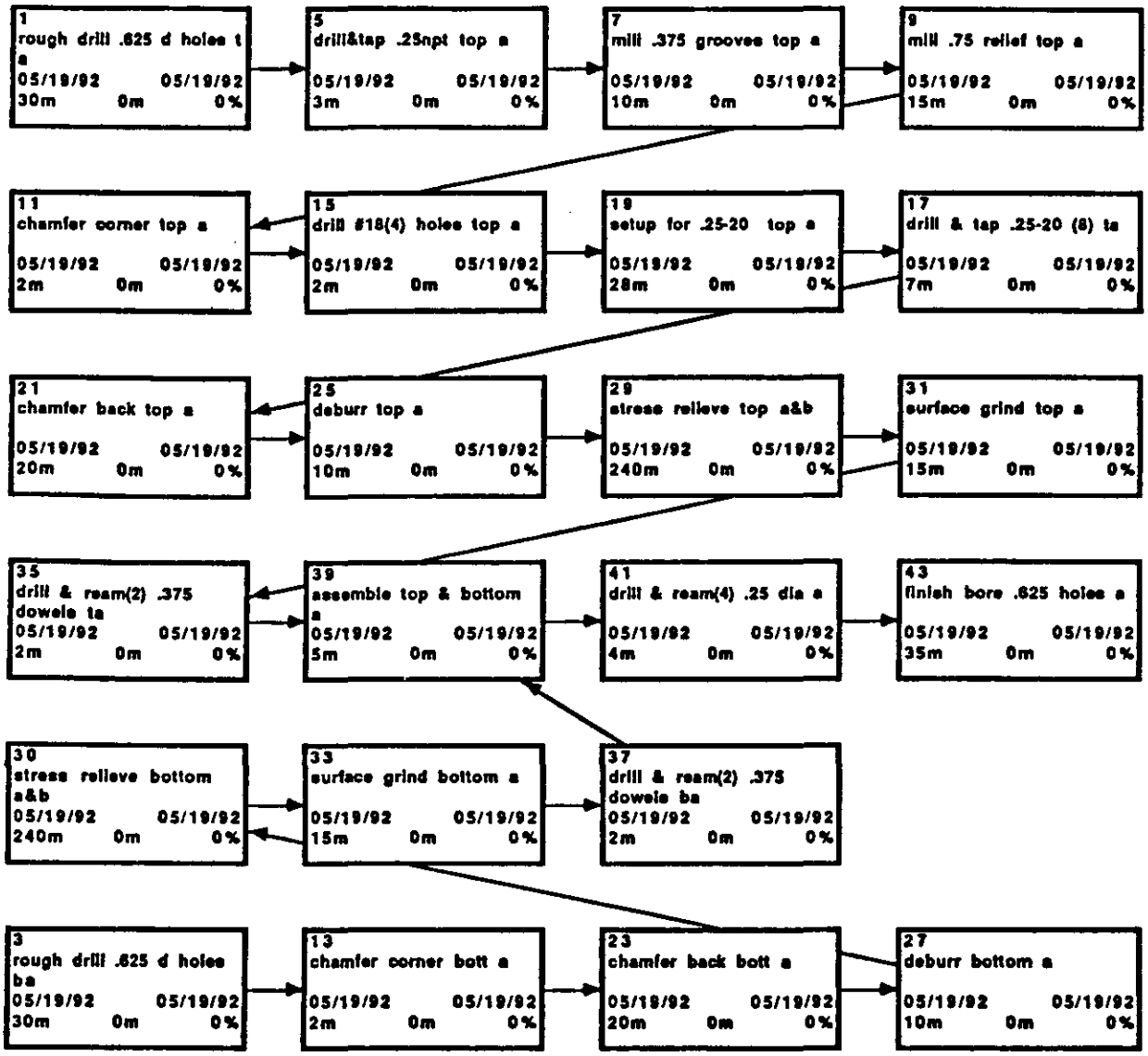
1
rough drill .625 d holes t a
05/19/92 05/19/92
30m 0m 0%
5
drill&tap .25npt top a
05/19/92 05/19/92
3m 0m 0%
7
mill .375 grooves top a
05/19/92 05/19/92
10m 0m 0%
9
mill .75 relief top a
05/19/92 05/19/92
15m 0m 0%
11
chamfer corner top a
05/19/92 05/19/92
2m 0m 0%
15
drill #18(4) holes top a
05/19/92 05/19/92
2m 0m 0%
19
setup for .25-20 top a
05/19/92 05/19/92
28m 0m 0%
17
drill & tap .25-20 (8) ta
05/19/92 05/19/92
7m 0m 0%
21
chamfer back top a
05/19/92 05/19/92
20m 0m 0%
25
deburr top a
05/19/92 05/19/92
10m 0m 0%
29
stress relieve top a&b
05/19/92 05/19/92
240m 0m 0%
31
surface grind top a
05/19/92 05/19/92
15m 0m 0%
35
drill & ream(2) .375 dowels ta
05/19/92 05/19/92
2m 0m 0%
39
assemble top & bottom a
05/19/92 05/19/92
5m 0m 0%
41
drill & ream(4) .25 dia a
05/19/92 05/19/92
4m 0m 0%
43
finish bore .625 holes a
05/19/92 05/19/92
35m 0m 0%
30
stress relieve bottom a&b
05/19/92 05/19/92
240m 0m 0%
33
surface grind bottom a
05/19/92 05/19/92
15m 0m 0%
37
drill & ream(2) .375 dowels ba
05/19/92 05/19/92
2m 0m 0%
3
rough drill .625 d holes ba
05/19/92 05/19/92
30m 0m 0%
13
chamfer corner bott a
05/19/92 05/19/92
2m 0m 0%
23
chamfer back bott a
05/19/92 05/19/92
20m 0m 0%
27
deburr bottom a
05/19/92 05/19/92
10m 0m 0%

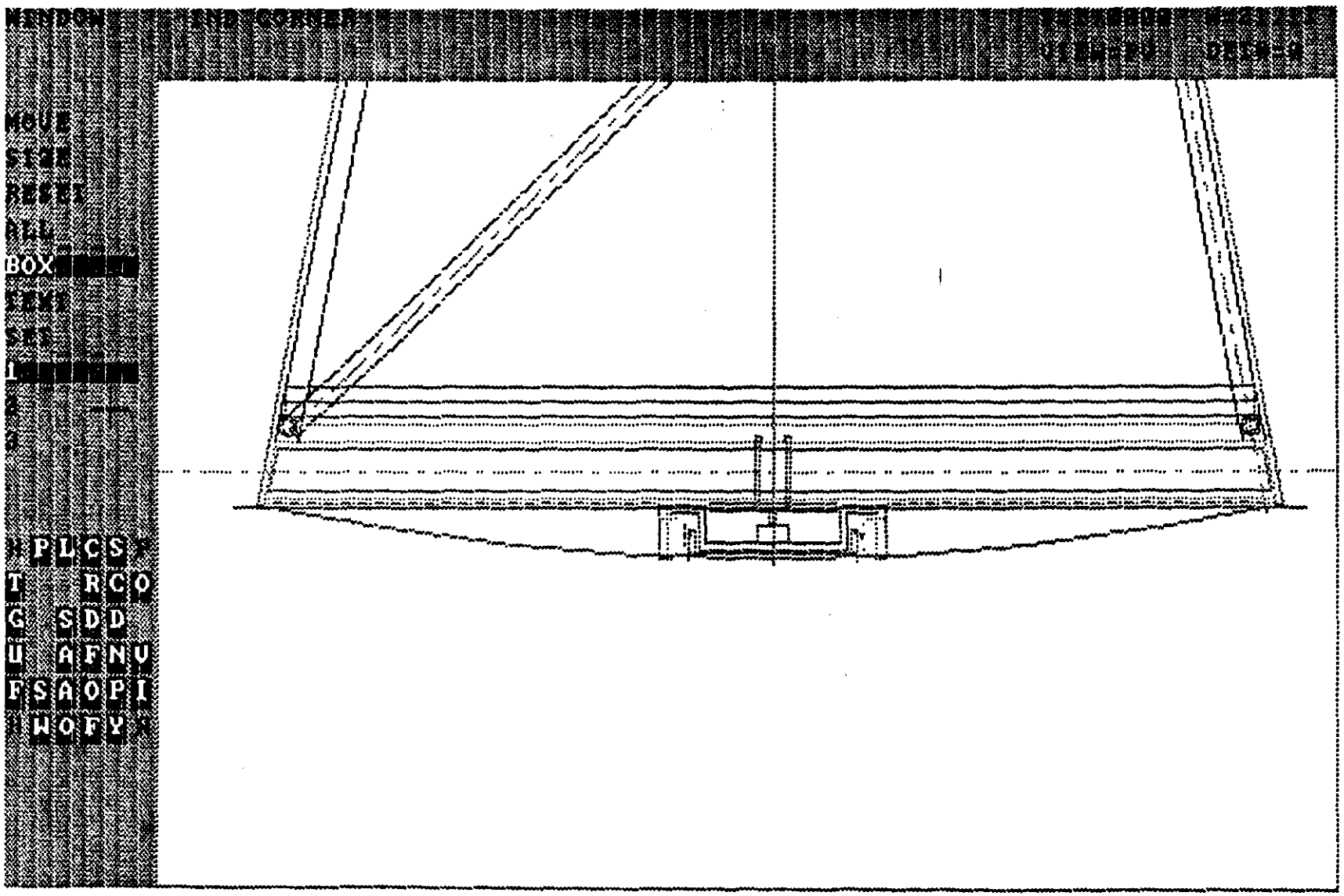
WINDOW
IND CORNER
MOVE
SIZE
RESET
ALL
BOX
TEXT
SET
1
2
3
PLCS
T RCO
G SDD
U AFNV
FSAOPI
WOFY

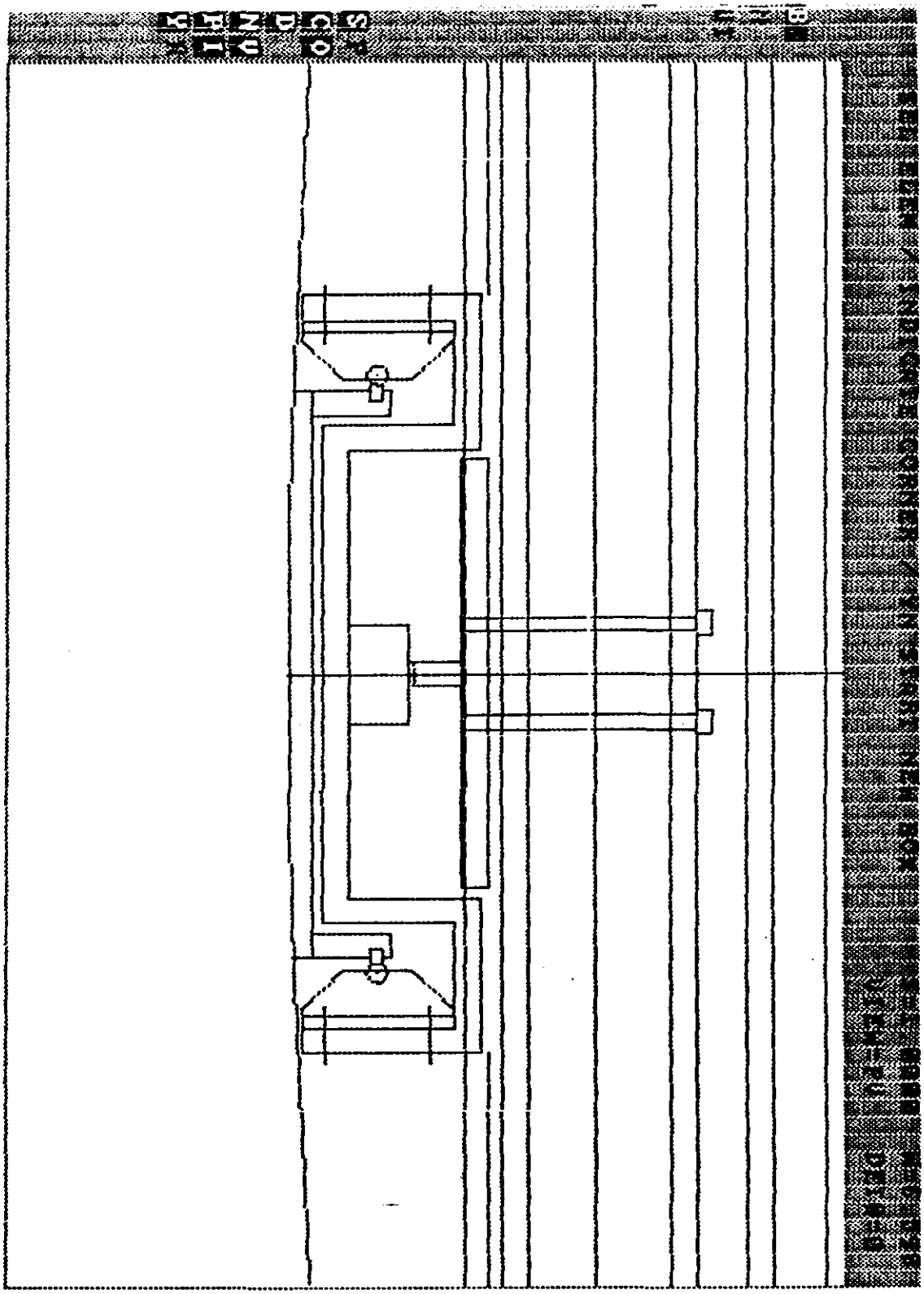

R. Gustavson/Draper

Muon System Cost Summary - Rev. 10 5/20/92

WBS No.	Item	Engrg/Design	M&S	Insp/Admin	Materials	Assembly	Installation	Sub-total	Contingency	Total
(-3.1)	Totals - PDT	12.747	5.876	10.461	46.096	17.587	2.738	95.505	32.885	128.390
(-3.2)	Totals - LSDT	12.747	5.876	10.358	37.9	20.214	2.738	89.833	30.718	120.551
03.1.1	Central Region - PDT	5.257	2.238	4.106	30.053	12.523	1.689	55.866	20.339	76.205
03.1.1.1	Installation	0.891	0.075	0.25	2.87	0	1.689	5.775	1.625	7.4
03.1.1.2	Sector Assembly	1.653	0.403	2.812	17.818	11.013	0	33.699	12.188	45.887
03.1.1.3	Electronics	1.785	1.62	0.732	8.565	0.19	0	12.892	5.126	18.018
03.1.1.4	Gas Systems	0.464	0.07	0.156	0.4	0.66	0	1.75	0.7	2.45
03.1.1.5	Cooling Systems	0.464	0.07	0.156	0.4	0.66	0	1.75	0.7	2.45
03.2.1	Central Region - LSDT	5.257	2.238	4.003	21.857	15.15	1.689	50.194	18.172	68.366
03.2.1.1	Installation	0.891	0.075	0.25	2.87	0	1.689	5.775	1.625	7.4
03.2.1.2	Sector Assembly	1.653	0.403	2.709	10.685	13.64	0	29.09	10.446	39.536
03.2.1.3	Electronics	1.785	1.62	0.732	7.502	0.19	0	11.829	4.701	16.53
03.2.1.4	Gas Systems	0.464	0.07	0.156	0.4	0.66	0	1.75	0.7	2.45
03.2.1.5	Cooling Systems	0.464	0.07	0.156	0.4	0.66	0	1.75	0.7	2.45
03.1.2	End Cap Region	4.307	1.999	3.059	16.043	5.064	1.049	31.521	11.311	42.832
03.1.2.1	Installation	0.297	0.036	0.206	1.811	0	1.049	3.399	0.962	4.361
03.1.2.2	Sector Assembly	1.322	0.361	2.255	5.359	4.109	0	13.406	4.491	17.897
03.1.2.3	Electronics	2.534	1.552	0.109	8.123	0.114	0	12.432	4.945	17.377
03.1.2.4	Gas Systems	0.077	0.025	0.252	0.4	0.468	0	1.222	0.488	1.71
03.1.2.5	Cooling Systems	0.077	0.025	0.237	0.35	0.373	0	1.062	0.425	1.487
03.1.3	Project Mgmt.	0	0.585	3.296	0	0	0	3.881	0.388	4.269
13	R&D	1.791	0.754	0	0	0	0	2.545	0.509	3.054
23	Concept Design	1.392	0.3	0	0	0	0	1.692	0.338	2.03

PDT Muon Subsystem Costs

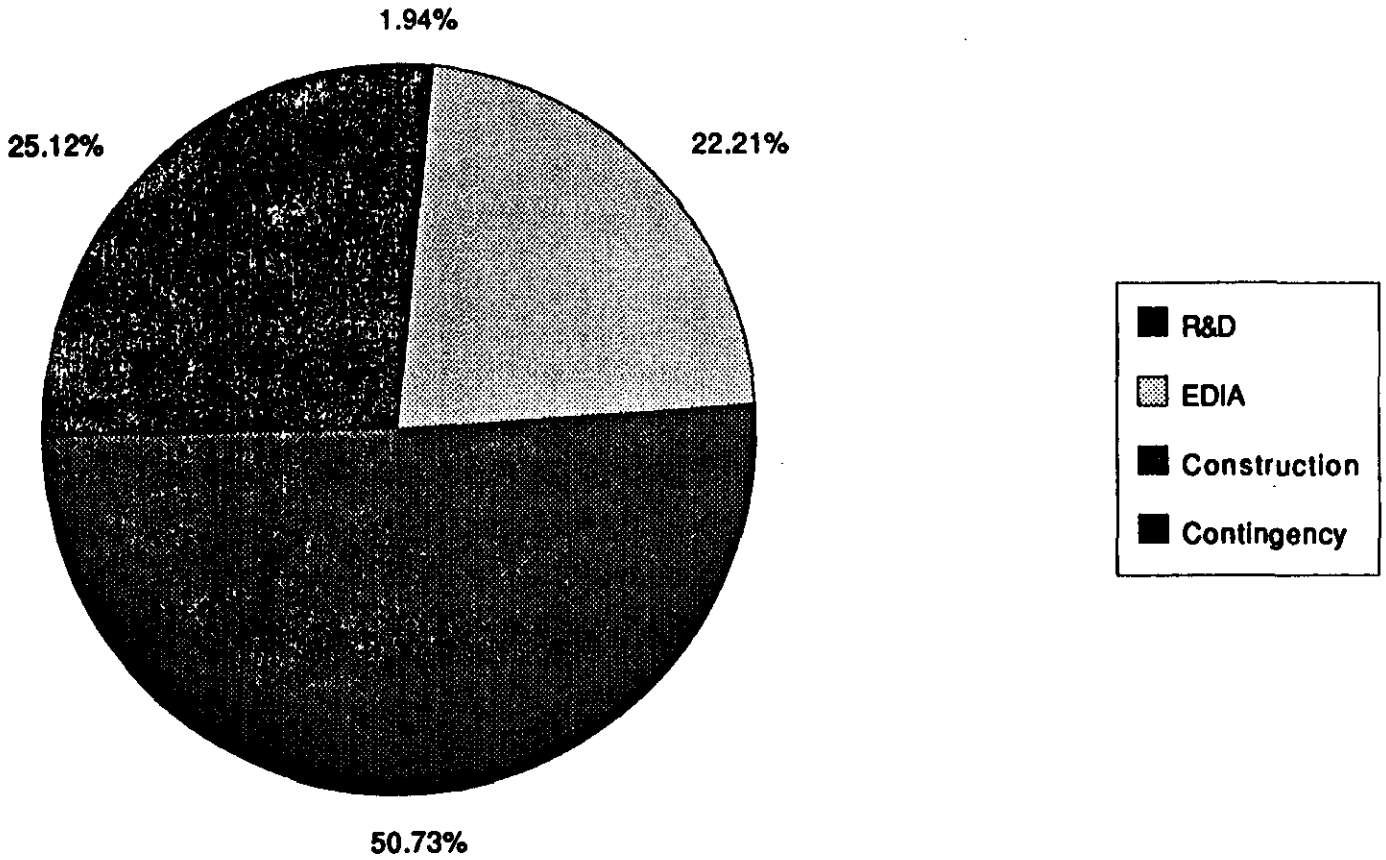

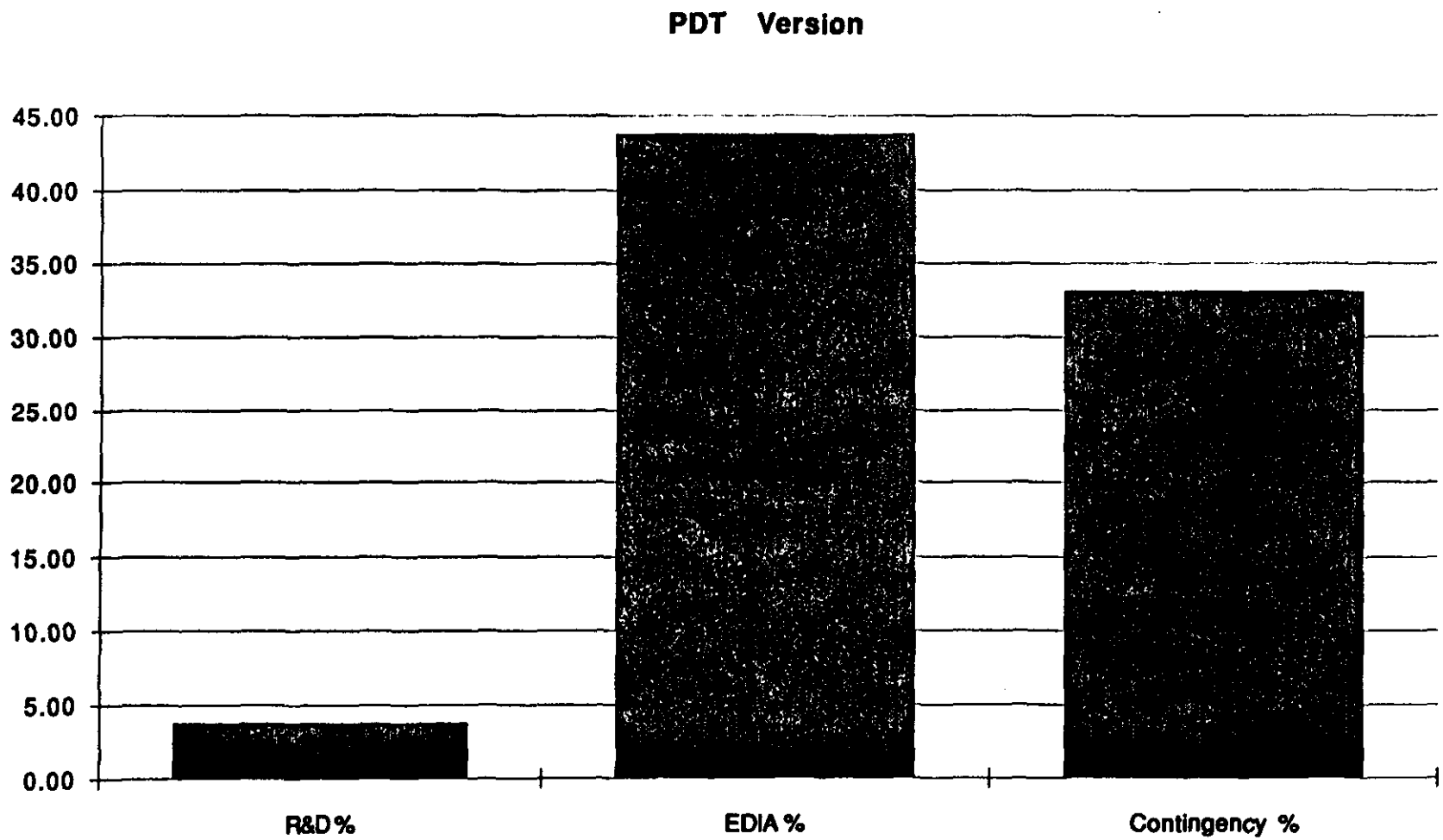
PDT Version
45.00
40.00
35.00
30.00
25.00
20.00
15.00
10.00
5.00
0.00
R&D %
EDIA %
Contingency %

LSDT Muon Subsystem Costs

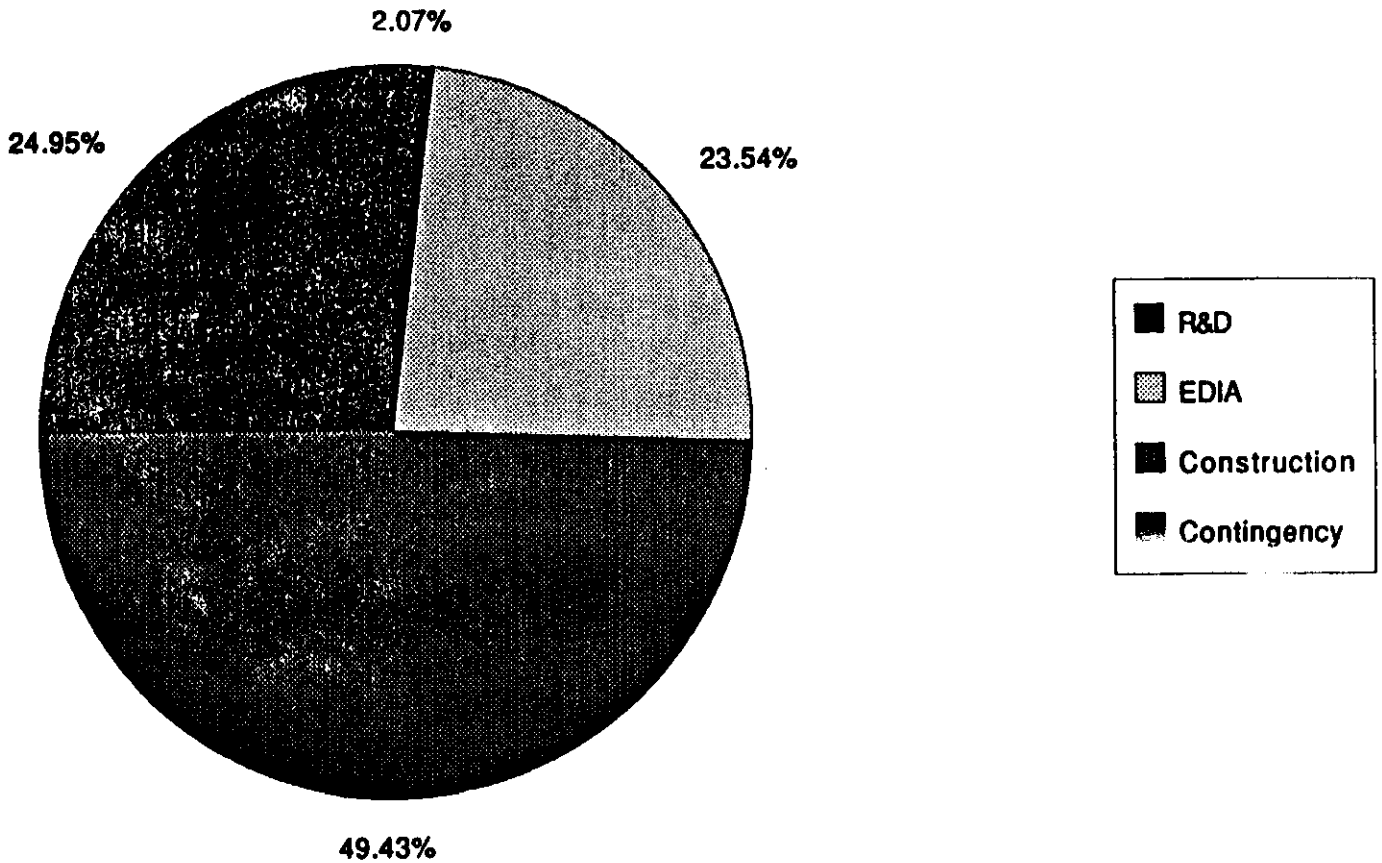

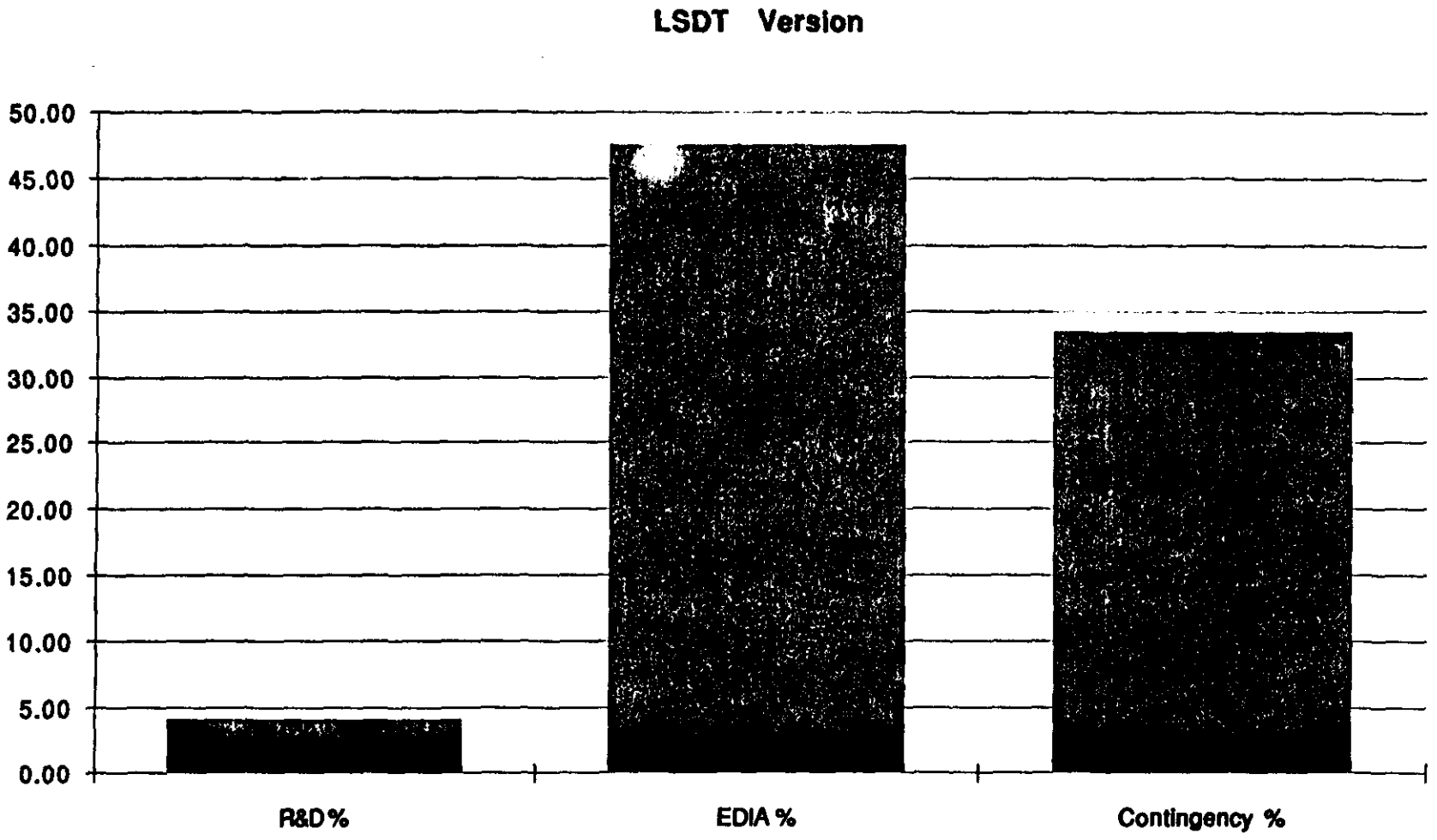
LSDT Version
50.00
45.00
40.00
35.00
30.00
25.00
20.00
15.00
10.00
5.00
0.00
R&D %
EDIA %
Contingency %

		Engineering/Design			M&S	Inspection/Admin			Prog/Fab	Assembly					Installation					Totals						Last
		Labor	Rate	Total		Labor	Rate	Total	Material	Labor	Rate	Subtotal	Material	Total	Labor	Rate	Subtotal	Material	Total	Labor	Material	Subtotal	Contingency Rate	Contingency Amount, k$	Total	
WBS no.	Item	my	k$/my	k$	k$	my	k$/my	k$	k$	my	k$/my	k$	k$	k$	my	k$/my	k$	k$	k$	k$	k$	k$			k$	modified
(-3.1)	PDT Muon Detector cost	102.4	125	12745	5077	80.8	117	10459	45095	253.3	61	15973	1011	17586	42.1	58	2461	270	2730	41640	53802	95502	34%	32880	128383	7-May-92
(-3.2)	LSDT Muon Detector cost	102.4	125	12745	5077	80.4	115	10357	37560	280.4	62	18702	1511	20213	42.1	58	2461	270	2730	44285	45550	89831	34%	30719	120550	7-May-92
	Sub-group 03.1 is used for all construction breakdown categories except those which are specifically LSDT (03.2).																									
03.1 - PDT	Muon Subsys. Construction PDT	76.73	121	8667	4022	80.63	117	10459	45095	253.30	61	15973	1011	17586	42	58	2461	270	2730	38467	53060	91300	35%	32030	123330	3-May-92
03.2 - LSDT	Muon Subsys. Construction LSDT	76.73	121	8667	4022	80.97	116	10357	37560	289	61	18702	1511	20213	42	58	2461	270	2730	41062	44613	85684	35%	30072	115468	3-May-92
03.1.1-PDT	Central Region	46.00	117	5357	2230	36.34	104	4100	30083	136.10	85	11614	1008	12883	24.40	61	1488	201	1689	22388	33061	55660	35%	20240	76296	3-May-92
03.2.1-LSDT	Central Region	46.00	117	5357	2230	38.00	105	4003	21087	174.32	82	14241	966	16190	24.40	61	1488	201	1689	24969	25206	50194	35%	18172	68367	3-May-92
03.1.1.1	Central Region Installation	9.00	99	891	78	3.61	71	250	2870						24.40	61	1488	201	1689	2630	3140	5770	30%	1626	7401	2-May-92
03.1.1.1.1	On-Site	0.00		0	0	1.38		100	2870						14.66		845	114	959	953	2096	3048	33%	818	4490	
03.1.1.1.1.1	Test				0	0.00		0	70						3.00	78	234	79	313	234	149	383	17%	65	448	2-May-92
03.1.1.1.1.2	Mechanical Assembly				3	0.50	78	39	2075						3.16	56	177	18	195	216	2096	2312	23%	532	2844	2-May-92
03.1.1.1.1.3	Electrical/Electronics Assy				2	0.38	78	20	325						2.00	55	110	9	129	149	336	482	23%	111	592	2-May-92
03.1.1.1.1.4	Fac Prep				3	0.50	78	39	100						6.50	49	319	8	327	385	111	469	23%	108	576	6-Jan-92
03.1.1.1.2	Off-Site	9.00		891	67	2.13		143	300						9.74		643	87	730	1677	454	2131	38%	810	2940	
03.1.1.1.2.1	Install, Test Fld Dsgn, Mech, Assy	9.00	99	891	67	2.13	67	143	300						9.74	66	643	87	730	1677	454	2131	38%	810	2940	6-Jan-92
03.1.1.2	Central Region Sector Assy-PDT	16.85	104	1653	400	30.60	98	2812	17816	124.16	88	10104	820	11013						14648	19099	33608	35%	12199	45807	3-May-92
03.2.1.2	Central Region Sector Assy LSDT	16.85	104	1653	402	30.32	90	2760	10698	169.32	81	12911	729	13640						17273	11617	28898	35%	10440	38838	3-May-92
03.1.1.2.1	On-Site	0.00		0	0	1.44		112	806	15.83	83	601	76	707						793	868	1076	35%	376	2067	
03.1.1.2.1.1	Sector Storage			0	0	0.00		0	50			0	50	50						0	100	100	15%	15	115	13-Jan-92
03.1.1.2.1.2	Test			0	3	0.56	78	44	125	1.25	59	74	6	80						117	134	251	23%	58	309	2-May-92
03.1.1.2.1.3	Assembly			0	4	0.63	78	49	575	10.53	82	863	19	882						612	598	1210	23%	278	1489	2-May-92
03.1.1.2.1.4	Fac Prep			0	2	0.25	78	20	50	0.76	59	44	1	45						64	53	117	23%	27	144	10-Jan-92
03.1.1.2.2	Off-Site	3.00		297	23	0.88		62	88	2.13		28	3	28						384	111	495	42%	208	704	
03.1.1.2.2.1	Assy Fld Final Dsgn, Mech, Assy	3.00	99	297	23	0.88	71	62	88	2.13	66	28	3	28						384	111	495	42%	208	704	10-Jan-92
03.1.1.2.3	Pressurized Drift Tubes	3.20	102	332	86	9.48	97	919	10011	52.36	88	4646	430	5076						5696	10627	16423	37%	6120	22548	
03.1.1.2.3.1	Off-Site	3.20		332	86	9.48		919	10011	52.36		4646	430	5076						5696	10627	16423	37%	6120	22548	
03.1.1.2.3.1.1	Shipping				2	0.23	133	31	50	0.46	107	49	201	250						80	253	333	38%	126	459	23-Jan-92
03.1.1.2.3.1.2	Test				3	0.50	133	67	25	5.66	110	623	7	630						689	38	727	38%	276	1003	23-Jan-92
03.1.1.2.3.1.3	Assembly				14	2.25	133	299	50	18.38	98	1798	24	1822						2099	88	2186	38%	831	3016	22-Apr-92
03.1.1.2.3.1.4	Facility Prep				5	0.75	133	100	0	3.75	97	364	125	489						464	130	594	23%	137	730	22-Jan-92
03.1.1.2.3.1.5	Machining, Inspection				42	5.63	72	405	9583	24.16	76	1812	73	1885						2217	9999	12216	38%	4642	16857	7-May-92
03.1.1.2.3.1.6	Final Design, Drwg/Spec Mods	3.20	102	332	20	0.13	133	17												349	20	369	31%	114	483	22-Jan-92
03.2.1.2.3	Limited Streamer Drift Tubes	3.20	102	332	86	9.48	97	919	2888	91.07	85	7586	330	7916						8830	3102	11938	37%	4427	16365	
03.2.1.2.3.1	Off-Site	3.20		332	86	9.48		919	2888	91.07		7586	330	7916						8830	3102	11938	37%	4427	16365	
03.2.1.2.3.1.1	Shipping				2	0.23	133	31	50	0.46	107	49	101	150						80	153	233	38%	88	321	23-Jan-92
03.2.1.2.3.1.2	Test				3	0.50	133	67	25	5.66	110	623	7	630						689	38	727	38%	276	1003	23-Jan-92
03.2.1.2.3.1.3	Assembly				14	2.25	133	299	400	20.00	98	1960	24	1984						2259	443	2702	38%	1027	3729	22-Jan-92
03.2.1.2.3.1.4	Facility Prep				5	0.75	133	100	0	3.75	97	364	125	489						464	130	594	23%	137	730	22-Jan-92
03.2.1.2.3.1.5	Machining, Inspection				42	5.63	72	405	2203	61.26	76	4890	73	4963						4995	2318	7313	38%	2779	10092	30-Apr-92
03.2.1.2.3.1.6	Final Design, Drwg/Spec Mods	3.20	102	332	20	0.13	133	17												349	20	369	31%	114	483	22-Jan-92
03.1.1.2.4	Resistive Plate Counters	3.20	102	332	89	10.89	90	988	4909	43.47	86	3703	137	3840						4993	5134	10127	37%	3751	13879	
03.1.1.2.4.1	Off-Site	3.20		332	89	10.89		988	4909	43.47		3703	137	3840						4993	5134	10127	37%	3751	13879	
03.1.1.2.4.1.1	Shipping				2	0.23	133	31	50	0.46	107	49	101	150						80	153	233	38%	88	321	24-Jan-92
03.1.1.2.4.1.2	Test				3	0.50	133	67	60	5.50	109	600	7	607						666	60	726	38%	276	1002	24-Jan-92
03.1.1.2.4.1.3	Assembly				14	2.25	133	299	300	4.16	113	470	6	476						769	320	1089	38%	414	1503	21-Apr-92
03.1.1.2.4.1.4	Facility Prep				5	0.75	133	100	0	3.75	97	364	5	369						464	10	474	23%	109	582	24-Jan-92
03.1.1.2.4.1.5	Machining, Inspection				48	6.19	72	446	4806	29.00	76	2220	18	2238						2666	4571	7237	38%	2750	9987	21-Apr-92
03.1.1.2.4.1.6	Final Design, Drwg/Spec Mods	3.20	102	332	20	0.13	133	17												349	20	369	31%	114	483	19-Jan-92
03.1.1.2.5	Sector Support Structures PDT	5.00	108	540	84	3.47	102	383	1330	11.10	82	915	133	1048						1866	1547	3388	37%	1232	4587	
03.1.1.2.5.1	Off-Site	5.00		540	84	3.47		383	1330	11.10		915	133	1048						1866	1547	3388	37%	1232	4587	
03.1.1.2.5.1.1	Shipping				2	0.50	78	39	20	0.50	50	25	101	126						64	123	187	15%	28	215	12-Jan-92
03.1.1.2.5.1.2	Machining, Inspection				60	2.22	94	209	1310	10.60	84	890	32	922						1099	1402	2501	38%	950	3451	7-May-92
03.1.1.2.5.1.3	Final Design, Drwg/Spec Mods	5.00	108	540	22	0.75	140	105	0	0	0	0	0							645	22	667	38%	253	920	7-May-92
03.2.1.2.5	Sector Support Structures LSDT	5.00	108	540	84	3.31	78	260	1202	8.07	82	703	133	836						1402	1499	2902	37%	1094	4000	
03.2.1.2.5.1	Off-Site	5.00		540	84	3.31		250	1202	8.07		703	133	836						1402	1499	2902	37%	1094	4000	
03.2.1.2.5.1.1	Shipping				2	0.50	78	39	20	0.50	50	25	101	126						64	123	187	15%	28	215	12-Jan-92
03.2.1.2.5.1.2	Machining, Inspection				60	1.88	84	104	1202	8.07	84	678	32	710						764	1384	2136	38%	812	2950	2-May-92
03.2.1.2.5.1.3	Final Design, Drwg/Spec Mods	5.00	108	540	22	0.75	140	105	0	0	0	0	0							645	22	667	38%	253	920	2-May-92
03.1.1.2.6	Alignment & Calibrate Sys PDT	1.35	110	153	115	3.88	120	467	694	3.30	96	214	50	264						773	840	1615	30%	492	2113	
03.1.1.2.6.1	Local Chamber Alignment	0.65		77	92	1.83		203	534	1.00		95	25	120						378	611	989	38%	329	1306	

WBS no.	Item	Engineering/Design Labor my	Engineering/Design Rate k$/my	Engineering/Design Total k$	M&S k$	Inspection/Admin Labor my	Inspection/Admin Rate k$/my	Inspection/Admin Total k$	Proof/Fab Material k$	Assembly Labor my	Assembly Rate k$/my	Assembly Subtotal k$	Assembly Material k$	Assembly Total k$	Installation Labor my	Installation Rate k$/my	Installation Subtotal k$	Installation Material k$	Installation Total k$	Totals Labor k$	Totals Material k$	Totals Subtotal k$	Contingency Rate	Contingency Amount k$	Total k$	Last modified
00.1.1.2.6.1.1	Off-Site	0.66		77	62	1.03		203	834	1.00		96	25	120						375	611	986	33%	320	1306	
00.1.1.2.6.1.1.1	Shipping				25	1.00	125	125		0.00	0	0	25	25						125	50	175	15%	26	201	31-Jan-02
00.1.1.2.6.1.1.2	Test				5	0.13	120	16		0.25	95	24		24						39	5	44	23%	10	55	31-Jan-02
00.1.1.2.6.1.1.3	Assembly				5	0.13	120	16		0.25	95	24		24						39	5	44	23%	10	55	31-Jan-02
00.1.1.2.6.1.1.4	Facility Prep				5	0.13	120	16	25	0.25	95	24		24						39	30	69	23%	16	85	31-Jan-02
00.1.1.2.6.1.1.5	Machining, Inspection				2	0.26	120	32	509	0.25	95	24		24						58	511	569	42%	236	804	3-May-02
00.1.1.2.6.1.1.6	Final Design, Drwg/Spec Mods	0.66	110	77	10									0						77	10	87	23%	20	106	31-Jan-02
00.2.1.2.6	Alignment & Calibrate Sys LBDT	1	110	153	112	3	120	407	924	2	95	214	50	264						773	1000	1859	1	603	2462	
00.2.1.2.6.1	Local Chamber Alignment	0.66		77	52	1.03		203	774	1.00		95	25	120						375	851	1226	34%	421	1647	
00.2.1.2.6.1.1	Off-Site	0.66		77	52	1.03		203	774	1.00		95	25	120						375	851	1226	34%	421	1647	
00.2.1.2.6.1.1.1	Shipping				25	1.00	125	125		0.00	0	0	25	25						125	50	175	15%	26	201	31-Jan-02
00.2.1.2.6.1.1.2	Test				5	0.13	120	16		0.25	95	24		24						39	5	44	23%	10	55	31-Jan-02
00.2.1.2.6.1.1.3	Assembly				5	0.13	120	16		0.25	95	24		24						39	5	44	23%	10	55	31-Jan-02
00.2.1.2.6.1.1.4	Facility Prep				5	0.13	120	16	25	0.25	95	24		24						39	30	69	23%	16	85	31-Jan-02
00.2.1.2.6.1.1.5	Machining, Inspection				2	0.26	120	32	749	0.25	95	24		24						55	781	836	40%	339	1145	3-May-02
00.2.1.2.6.1.1.6	Final Design, Drwg/Spec Mods	0.66	110	77	10									0						77	10	87	23%	20	106	31-Jan-02
00.1.1.2.6.2	Global Sector/Region Monitor	0.66	110	77	60	1.53	120	203	150	1.20	95	115	25	144						300	235	635	27%	172	808	
00.1.1.2.6.2.1	Off-Site	0.66		77	60	1.53		203	150	1.20		115	25	144						300	235	635	27%	172	808	
00.1.1.2.6.2.1.1	Shipping				25	1.00	125	125		0.00	0	0	25	25						125	50	175	15%	26	201	31-Jan-02
00.1.1.2.6.2.1.2	Test				5	0.13	120	16		0.25	95	24		24						39	5	44	23%	10	55	31-Jan-02
00.1.1.2.6.2.1.3	Assembly				5	0.13	120	16		0.25	95	24		24						39	5	44	23%	10	55	31-Jan-02
00.1.1.2.6.2.1.4	Facility Prep				5	0.13	120	16	25	0.25	95	24		24						39	30	69	23%	16	85	31-Jan-02
00.1.1.2.6.2.1.5	Machining, Inspection				10	0.26	120	31	120	0.50	95	48		48						79	135	214	42%	90	304	31-Jan-02
00.1.1.2.6.2.1.6	Final Design, Drwg/Spec Mods	0.66	110	77	10									0						77	10	87	23%	20	106	31-Jan-02
00.1.1.3	Elstrnc/Elstr. Hrdwre - PDT	15.24	110	1700	1030	4.75	154	732	8005	2.00	95	190	0	190						2700	10105	12801	40%	5120	18017	21-Apr-02
00.2.1.3	Elstrnc/Elstr. Hrdwre - LBDT	15.24	110	1700	1030	4.75	154	732	7087	2.00	95	190	0	190						2700	9122	11826	40%	4701	16529	21-Apr-02
00.1.1.3.1	Pressurized Drift Tubes	6.40	150	870	1065	1.75	154	270	6611	0.00	0	0	0	0						1236	7696	8936	40%	3574	12509	
00.1.1.3.1.1	Off-Site	6.40		870	1065	1.75		270	6611	0		0	0	0						1236	7696	8936	40%	3574	12509	
00.1.1.3.1.1.1	Sense Electronics / Triggers	5.50	154	853	660	0.75	154	116	6053											1009	6703	7712	40%	3085	10796	21-Apr-02
00.1.1.3.1.1.2	Calibration Electronics Des, Fab, S	0.66	110	77	15	0.50	154	77	250											154	265	419	40%	167	586	21-Apr-02
00.1.1.3.1.1.3	High / Low Voltage Systems	0.00	154	0	420	0.50	154	77	306											77	728	805	40%	322	1127	21-Apr-02
00.2.1.3.1	Limited Streamer Drift Tubes	6.40	150	870	1000	1.75	154	270	5840	0.00	0	0	0	0						1236	6435	7672	40%	3149	11021	
00.2.1.3.1.1	Off-Site	6.40		870	1000	1.75		270	5840	0		0	0	0						1236	6435	7672	40%	3149	11021	
00.2.1.3.1.1.1	Sense Electronics / Triggers	5.50	154	853	660	0.75	154	116	5053											1009	5703	6712	40%	2685	9396	21-Apr-02
00.2.1.3.1.1.2	Calibration Electronics Des, Fab, S	0.66	110	77	15	0.50	154	77	250											154	265	419	40%	167	586	21-Apr-02
00.2.1.3.1.1.3	High / Low Voltage Systems	0.00	154	0	420	0.50	154	77	246											77	665	742	40%	297	1039	21-Apr-02
00.1.1.3.2	Resistive Plate Counters	4.40	140	952	400	2.00	154	308	1784											970	2214	3184	40%	1274	4457	
00.1.1.3.2.1	Off-Site	4.40		952	400	2.00		308	1784											970	2214	3184	40%	1274	4457	
00.1.1.3.2.1.1	Beam Crossing / Triggers	3.84	154	585	420	1.00	154	154	1403											739	1823	2562	40%	1025	3587	21-Apr-02
00.1.1.3.2.1.2	Calibration Electronics Des, Fab, S	0.66	110	77	25	0.50	154	77	250											154	275	429	40%	171	600	21-Apr-02
00.1.1.3.2.1.3	High / Low Voltage Systems	0.00	154	0	10	0.50	154	77	101											77	116	193	40%	77	270	21-Apr-02
00.1.1.3.3	Align and Cal System Elec	1.32	110	153	75	1.00	154	154	200	2.00	95	190	0	190						407	275	772	35%	279	1051	
00.1.1.3.3.1	Local Chamber Alignment	0.66		77	35	0.50		77	100	1.00		95	0	95						248	135	384	35%	139	523	31-Jan-02
00.1.1.3.3.1.1	Off-Site Assembly, Test				25	0.50	154	77	100	1.00	95	95	0	95						172	125	297	40%	119	416	31-Jan-02
00.1.1.3.3.1.2	Final Design, Drwg/Spec Mods	0.66	110	77	10															77	10	87	23%	20	106	31-Jan-02
00.1.1.3.3.2	Global Sector/Region Monitor	0.66	110	77	40	0.50	154	77	100	1.00	95	95	0	95						248	140	388	35%	140	528	
00.1.1.3.3.2.1	Off-Site Assembly, Test				25	0.50	154	77	100	1.00	95	95	0	95						172	125	297	40%	119	416	31-Jan-02
00.1.1.3.3.2.2	Final Design, Drwg/Spec Mods	0.66	110	77	15															77	15	92	23%	21	113	31-Jan-02
00.1.1.4	Gas Systems - PDT	4.00	110	404	70	1.30	128	100	400	6.00	95	570	90	660						1100	600	1700	40%	700	2400	
00.2.1.4	Gas Systems - LBDT	4.00	110	404	70	1.30	128	100	400	6.00	95	570	90	660						1100	600	1700	40%	700	2400	
00.1.1.4.1	Pressurized Drift Tubes	2.00	110	232	35	0.62	128	79	200	3.00	95	285	45	330						585	290	875	40%	350	1225	
00.1.1.4.1.1	Off-Site	2.00		232	35	0.62		79	200	3.00		285	45	330						585	290	875	40%	350	1225	
00.1.1.4.1.1.1	Shipping				5	0.13	120	16		0.25	95	24	5	29						39	10	49	40%	20	69	31-Jan-02
00.1.1.4.1.1.2	Subassembly, Test				5	0.13	125	16		1.00	95	95	15	110						111	20	131	40%	52	183	31-Jan-02
00.1.1.4.1.1.3	Machining, Inspection				5	0.13	125	16		1.00	95	95	15	110						111	20	131	40%	52	183	31-Jan-02
00.1.1.4.1.1.4	Procurement				5	0.13	125	16	200	0.75	95	71	10	81						87	215	302	40%	121	423	31-Jan-02
00.1.1.4.1.1.5	Final Design, Drwg/Spec Mods	2.00	110	232	15	0.13	120	16												248	15	263	40%	105	368	31-Jan-02
00.2.1.4.1	Limited Streamer Drift Tubes	2.00	110	232	35	0.62	128	79	200	3.00	95	285	45	330						585	290	875	40%	350	1225	
00.2.1.4.1.1	Off-Site	2.00		232	35	0.62		79	200	3.00		285	45	330						585	290	875	40%	350	1225	
00.2.1.4.1.1.1	Shipping				5	0.13	125	16		0.25	95	24	5	29						39	10	49	40%	20	69	31-Jan-02
00.2.1.4.1.1.2	Subassembly, Test				5	0.13	125	16		1.00	95	95	15	110						111	20	131	40%	52	183	31-Jan-02
00.2.1.4.1.1.3	Machining, Inspection				5	0.13	125	16		1.00	95	95	15	110						111	20	131	40%	52	183	31-Jan-02
00.2.1.4.1.1.4	Procurement				5	0.13	125	16	200	0.75	95	71	10	81						87	215	302	40%	121	423	31-Jan-02
00.2.1.4.1.1.5	Final Design, Drwg/Spec Mods	2.00	110	232	15	0.13	125	16												248	15	263	40%	105	368	31-Jan-02
00.1.1.4.2	Resistive Plate Counters	2.00	110	232	35	0.62	128	79	200	3.00	95	285	45	330						585	290	875	40%	350	1225	
00.1.1.4.2.1	Off-Site	2.00		232	35	0.62		79	200	3.00		285	45	330						585	290	875	40%	350	1225	
00.1.1.4.2.1.1	Shipping				5	0.13	120	16		0.25	95	24	5	29						39	10	49	40%	20	69	31-Jan-02
00.1.1.4.2.1.2	Subassembly, Test				5	0.13	120	16		1.00	95	95	15	110						111	20	131	40%	52	183	31-Jan-02

		Engineering/Design			M&S	Inspection/Admin			ProcFab	Assembly					Installation					Total						
		Labor	Rate	Total		Labor	Rate	Total	Material	Labor	Rate	Subtotal	Material	Total	Labor	Rate	Subtotal	Material	Total	Labor	Material	Subtotal	Contingency		Total	Last
WBS no.	Item	my	k$/my	k$	k$	my	k$/my	k$	k$	my	k$/my	k$	k$	k$	my	k$/my	k$	k$	k$	k$	k$	k$	Rate	Amount, k$	k$	modified
03.1.1.4.2.1.3	Machining, Inspection				8	0.13	125	16		1.00	95	95	15	110						111	20	131	40%	52	183	31-Jan-92
03.1.1.4.2.1.4	Procurement				8	0.13	125	16	200	0.75	95	71	10	81						87	215	302	40%	121	423	31-Jan-92
03.1.1.4.2.1.5	Final Design, Drwg/Spec Mods	2.00	110	232	16	0.13	125	16												248	15	263	40%	105	368	31-Jan-92
03.1.1.5	Cooling Systems - PDT	4.00	110	464	70	1.30	125	166	400	6.00	95	570	90	660						1190	560	1750	40%	700	2450	
03.2.1.5	Cooling Systems - LSDT	4.00	110	464	70	1.30	125	166	400	6.00	95	570	90	660						1190	560	1750	40%	700	2450	
03.1.1.8.1	Pressurized Drift Tubes	2.00	110	232	30	0.63	125	78	200	3.00	95	285	45	330						595	280	875	40%	350	1225	
03.1.1.8.1.1	Off-Site	2.00		232	30	0.63		78	200	3.00		285	45	330						595	280	875	40%	350	1225	
03.1.1.8.1.1.1	Shipping				8	0.13	125	16		0.25	95	24	5	29						39	10	49	40%	20	69	31-Jan-92
03.1.1.8.1.1.2	Subassembly, Test				8	0.13	125	16		1.00	95	95	15	110						111	20	131	40%	52	183	31-Jan-92
03.1.1.8.1.1.3	Machining, Inspection				8	0.13	125	16		1.00	95	95	15	110						111	20	131	40%	52	183	31-Jan-92
03.1.1.8.1.1.4	Procurement				8	0.13	125	16	200	0.75	95	71	10	81						87	215	302	40%	121	423	31-Jan-92
03.1.1.8.1.1.5	Final Design, Drwg/Spec Mods	2.00	110	232	16	0.13	125	16												248	15	263	40%	105	368	31-Jan-92
03.2.1.8.1	Limited Streamer Drift Tubes	2.00	110	232	30	0.63	125	78	200	3.00	95	285	45	330						595	280	875	40%	350	1225	
03.2.1.8.1.1	Off-Site	2.00		232	30	0.63		78	200	3.00		285	45	330						595	280	875	40%	350	1225	
03.2.1.8.1.1.1	Shipping				8	0.13	125	16		0.25	95	24	5	29						39	10	49	40%	20	69	31-Jan-92
03.2.1.8.1.1.2	Subassembly, Test				8	0.13	125	16		1.00	95	95	15	110						111	20	131	40%	52	183	31-Jan-92
03.2.1.8.1.1.3	Machining, Inspection				8	0.13	125	16		1.00	95	95	15	110						111	20	131	40%	52	183	31-Jan-92
03.2.1.8.1.1.4	Procurement				8	0.13	125	16	200	0.75	95	71	10	81						87	215	302	40%	121	423	31-Jan-92
03.2.1.8.1.1.5	Final Design, Drwg/Spec Mods	2.00	110	232	16	0.13	125	16												248	15	263	40%	105	368	31-Jan-92
03.1.1.8.2	Resistive Plate Counters	2.00	110	232	30	0.63	125	78	200	3.00	95	285	45	330						595	280	875	40%	350	1225	
03.1.1.8.2.1	Off-Site	2.00		232	30	0.63	154	78	200	3.00	95	285	45	330						595	280	875	40%	350	1225	
03.1.1.8.2.1.1	Shipping				8	0.13	125	16		0.25	95	24	5	29						39	10	49	40%	20	69	31-Jan-92
03.1.1.8.2.1.2	Subassembly, Test				8	0.13	125	16		1.00	95	95	15	110						111	20	131	40%	52	183	31-Jan-92
03.1.1.8.2.1.3	Machining, Inspection				8	0.13	125	16		1.00	95	95	15	110						111	20	131	40%	52	183	31-Jan-92
03.1.1.8.2.1.4	Procurement				8	0.13	125	16	200	0.75	95	71	10	81						87	215	302	40%	121	423	31-Jan-92
03.1.1.8.2.1.5	Final Design, Drwg/Spec Mods	2.00	110	232	16	0.13	125	16												248	15	263	40%	105	368	31-Jan-92
03.1.2	End Cap Region	33.87	150	4900	3000	30.00	100	3004	10042	128.19	50	4401	602	5003	18	56	972	77	1049	13707	18723	31810	38%	11911	42036	3-May-92
03.1.2.1	End Cap Region Installation	3.00	99	297	30	2.07	75	500	1011						17.74	55	972	77	1049	1478	1914	3392	38%	909	4301	
03.1.2.1.1	On-Site	0.00		0	0	1.50		97	1661						12.83	53	663	21	684	780	1600	2430	23%	583	3013	
03.1.2.1.1.1	Test				2	0.33	78	26	37						6.00	51	306	7	313	332	46	378	23%	87	465	27-Jan-92
03.1.2.1.1.2	Mechanical Assembly				2	0.33	78	26	1537						1.58	56	88	7	95	114	1546	1660	23%	382	2042	2-May-92
03.1.2.1.1.3	Electrical/Electronics Assembly				2	0.33	78	26	37						3.00	52	156	4	160	162	43	225	23%	52	276	27-Jan-92
03.1.2.1.1.4	Fan Prep				2	0.26	78	20	50						2.26	50	113	3	116	132	55	187	23%	43	230	27-Jan-92
03.1.2.1.2	Off-Site	3.00		297	28	1.63		109	150						4.91	63	309	56	365	716	234	950	42%	399	1348	
03.1.2.1.2.1	Install, Test Final Dsgn, Mech, Assy	3.00	99	297	24	1.63	67	109	150						4.91	63	309	56	365	716	234	950	42%	399	1348	27-Jan-92
03.1.2.2	End Cap Region Sector Assy	12.07	100	1329	301	21.39	108	2259	5388	116.67	31	3587	522	4109						7104	6242	13400	30%	4401	17807	
03.1.2.2.1	On-Site	0.00		0	0	1.94		188	788	10.32	24	246	78	321						434	826	1209	22%	282	1661	
03.1.2.2.1.1	Sector Storage					0.50	154	77	0			0	50	80						77	50	127	15%	19	146	13-Jan-92
03.1.2.2.1.2	Test				3	0.56	78	44	125	1.28	59	75	6	81						119	134	253	23%	58	311	2-May-92
03.1.2.2.1.3	Assembly				4	0.63	78	49	375	5.33	52	150	19	169						199	598	797	23%	183	980	2-May-92
03.1.2.2.1.4	Facility Prep				2	0.25	78	20	50	0.75	59	20	1	21						40	53	93	23%	21	114	10-Jan-92
03.1.2.2.2	Off-Site	3.00		297	23	0.88		62	88	2.13	69	147	3	150						506	111	617	42%	259	877	
03.1.2.2.2.1	Assy Fix Fnl Dsgn, Mech, Assy	3.00	99	297	23	0.88	71	62	88	2.13	69	147	3	150						506	111	617	42%	259	877	10-Jan-92
03.1.2.2.3	Cathode Strip Chambers	3.20	103	332	90	6.40	90	901	3305	90.31	27	2503	306	2809						3706	3787	7583	30%	2079	10263	
03.1.2.2.3.1	Off-Site	3.20		332	90	6.40		901	3305	90.21		2503	306	2809						3706	3787	7583	30%	2079	10263	
03.1.2.2.3.1.1	Shipping				2	0.23	133	31	50	0.44	107	49	101	150						60	153	233	15%	35	268	2-May-92
03.1.2.2.3.1.2	Test				3	0.50	133	67	25	32.00	110	24	7	31						91	36	129	23%	30	158	23-Jan-92
03.1.2.2.3.1.3	Assembly				14	2.25	133	299	35	20.00	95	1220		1220						1519	52	1571	23%	361	1933	2-May-92
03.1.2.2.3.1.4	Facility Prep				5	0.75	133	100	0	3.75	97	50	120	170						150	130	280	23%	64	344	22-Jan-92
03.1.2.2.3.1.5	Machining, Inspection				42	3.03	72	403	3279	20.00	78	1220	73	1293						1625	3394	5019	42%	2108	7127	2-May-92
03.1.2.2.3.1.6	Final Design, Drwg/Spec Mods	3.20	100	332	20	0.13	133													332	20	352	23%	81	432	22-Jan-92
03.1.2.2.4	Sector Support Structures	3.00	100	340	147	5.03	118	696	829	4.70	84	398	197	582						1831	1883	2714	30%	937	3651	
03.1.2.2.4.1	Off-Site	3.00		340	147	5.03		696	829	4.70		398	197	582						1831	1883	2714	30%	937	3651	
03.1.2.2.4.1.1	Shipping				25	1.00	125	125	0	0.00	0	0	78	78						125	100	225	15%	34	259	31-Jan-92
03.1.2.2.4.1.2	Test				13	1.00	125	125												125	15	140	23%	32	172	31-Jan-92
03.1.2.2.4.1.3	Assembly				13	1.00	125	125	0											125	15	140	23%	32	172	31-Jan-92
03.1.2.2.4.1.4	Facility Prep				10	0.50	125	63												63	10	73	38%	28	100	31-Jan-92
03.1.2.2.4.1.5	Machining, Inspection				60	1.50	97	153	829	4.70	84	398	32	427						640	921	1469	38%	558	2027	2-May-92
03.1.2.2.4.1.6	Final Design, Drwg/Spec Mods	3.00	100	340	22	0.75	140	105												645	22	667	38%	253	920	2-May-92
03.1.2.2.5	Alignment & Calibration Sys	1.33	110	183	96	3.30	120	400	300	2.00	90	230	30	260						787	426	1223	27%	333	1556	
03.1.2.2.5.1	Local Chamber Alignment	0.80		77	48	1.83		203	150	1.20		110	19	134						390	212	611	27%	167	778	
03.1.2.2.5.1.1	Off-Site	0.80		77	48	1.83		203	150	1.20		110	19	134						390	212	611	27%	167	778	
03.1.2.2.5.1.1.1	Shipping				25	1.00	125	125		0.00	0	0	15	15						125	40	165	15%	25	190	31-Jan-92
03.1.2.2.5.1.1.2	Test				2	0.13	125	16		0.25	95	24		24						39	2	41	23%	10	51	31-Jan-92
03.1.2.2.5.1.1.3	Assembly				2	0.13	125	16		0.25	95	24		24						39	2	41	23%	10	51	31-Jan-92

		Engineering/Design			MRB	Inspection/Admin			Proof up	Assembly					Inspection					Tests						Last Updated
		Labor	Pass	Total		Labor	Pass	Total	Material	Labor	Pass	Subcontr	Material	Total	Labor	Pass	Subcontr	Material	Total	Labor	Material	Subcontr	Contingency		Total	
WBS no.	Item	mo	hr/mo	hr	hr	mo	hr/mo	hr	hr	mo	hr/mo	hr	hr	hr	mo	hr/mo	hr	hr	hr	hr	hr	hr	Pass	Amount, hr		
03.1.2.2.0.1.1.4	Facility Prep				2	0.13	120	16	20	0.20	90	24		24						39	27	66	23%	15		Jan-02
03.1.2.2.0.1.1.5	Machining, Inspection				2	0.20	120	31	120	0.50	90	45		45						79	127	206	42%	86		3 May-02
03.1.2.2.0.1.1.6	Final Design, Drug/Spec Mods	0.00	110	77	10							0		0						77	16	93	23%	21	113	31-Jan-02
03.1.2.2.0.2	Global Sentechnologies Shelter	0.50	110	77	40	1.03	120	203	180	1.20	0	110	15	134						368	213	611	27%	167	778	
03.1.2.2.0.2.1	Off-Site	0.50		77	40	1.03		203	180	1.20		110	15	134						368	213	611	27%	167	778	
03.1.2.2.0.2.1.1	Shipping				20	1.00	120	120		0.00	0	0	15	15						125	40	165	15%	25	190	31-Jan-02
03.1.2.2.0.2.1.2	Test				2	0.13	120	16		0.20	90	24		24						39	2	41	23%	10	51	31-Jan-02
03.1.2.2.0.2.1.3	Assembly				2	0.13	120	16		0.20	90	24		24						39	2	41	23%	10	51	31-Jan-02
03.1.2.2.0.2.1.4	Facility Prep				2	0.13	120	16	20	0.20	90	24		24						39	27	66	23%	15	82	31-Jan-02
03.1.2.2.0.2.1.5	Machining, Inspection				2	0.20	120	31	120	0.50	90	45		45						79	127	206	42%	86	292	31-Jan-02
03.1.2.2.0.2.1.6	Final Design, Drug/Spec Mods	0.00	110	77	10							0		0						77	16	93	23%	21	113	2-Dec-01
03.1.2.3	Electronics/Electronics Hardware	10.70	151	3634	1500	0.70	140	100	0122	1.20	91	114	0	114						2700	3675	12031	40%	4948	17579	31-Apr-02
03.1.2.3.1	Cathode Strip Chambers	10.40	154	2301	1535	0.00	0	0	7401	0.00		0	0	0						2301	9826	11407	40%	4563	15970	
03.1.2.3.1.1	Off-Site	10.40		2301	1535	0.00	0	0	7401	0.00		0	0	0						2301	9826	11407	40%	4563	15970	
03.1.2.3.1.1.1	Spare Electronics Design, Fab, Ship	7.00	154	1078	700				3052											1078	3752	4830	40%	1744	6604	31-Apr-02
03.1.2.3.1.1.2	Tripping Electronics Des, Fab, Sh	0.50	154	347	440				1037											347	2077	2424	40%	1170	4094	31-Apr-02
03.1.2.3.1.1.3	Beam Counting Electronics Des, Fab	2.30	154	354	395				347											354	737	1091	40%	438	1528	31-Apr-02
03.1.2.3.1.1.4	Calibration Electronics Des, Fab, S	0.50	154	162	0				100											162	168	207	40%	83	289	31-Apr-02
03.1.2.3.1.1.5	High-Voltage Systems Des, Fab, Sh	0.00	154	0	0				325											0	325	325	40%	130	455	31-Apr-02
03.1.2.3.2	Align and Cal System Elec	1.32	110	133	17	0.70	140	100	032	1.20	91	114	0	114						370	640	1024	37%	383	1407	
03.1.2.3.2.1	Local Chamber Alignment	0.00		77	0	0.20		32	032	0.20		19	0	19						127	030	665	38%	252	917	
03.1.2.3.2.1.1	Off-Site Assembly/Test				2	0.20	120	32	532	0.20	70	19		19						96	534	564	40%	234	818	31-Jan-02
03.1.2.3.2.1.2	Final Design, Drug/Spec Mods	0.00	110	77	4															77	4	81	23%	19	99	31-Jan-02
03.1.2.3.2.2	Global Sentechnologies Shelter	0.50	110	77	11	0.80	164	77	100	1.00	90	90		90						245	111	360	38%	136	496	
03.1.2.3.2.2.1	Off-Site Assembly/Test				7	0.80	164	77	100	1.00	90	90	0	90						172	107	279	40%	112	391	31-Jan-02
03.1.2.3.2.2.2	Final Design, Drug/Spec Mods	0.00	110	77	4															77	4	81	23%	19	99	31-Jan-02
03.1.2.4	Gas System	0.00	110	77	20	2.00	120	240	400	4.00	90	420	40	400						780	400	1221	40%	488	1709	
03.1.2.4.1	Cathode Strip Chambers	0.00	110	77	20	2.00	120	240	400	4.00	90	420	40	400						780	400	1221	40%	488	1709	
03.1.2.4.1.1	Off-Site	0.00		77	20	2.00		240	400	4.00		420	40	400						780	400	1221	40%	488	1709	
03.1.2.4.1.1.1	Shipping				7	1.00	120	120	200	1.75	90	158	0	158						330	207	542	40%	225	767	2-Dec-01
03.1.2.4.1.1.2	Subassembly, Test				4	0.13	120	16		1.00	90	90	15	110						111	19	130	40%	52	181	2-Dec-01
03.1.2.4.1.1.3	Machining, Inspection				5	0.13	120	16		1.00	90	90	15	110						111	20	131	40%	52	183	2-Dec-01
03.1.2.4.1.1.4	Procurement				5	0.13	120	16	200	0.75	90	71	10	81						87	210	302	40%	121	423	2-Dec-01
03.1.2.4.1.1.5	Final Design, Drug/Spec Mods	0.00	110	77	4	0.13	120	16												92	4	96	40%	38	134	2-Dec-01
03.1.2.5	Cooling System	0.00	110	77	20	1.00	120	237	300	3.00	90	333	40	373						840	410	1062	40%	425	1486	
03.1.2.5.1	Cathode Strip Chambers	0.00	110	77	20	1.00	120	237	300	3.00	90	333	40	373						840	410	1062	40%	425	1486	
03.1.2.5.1.1	Off-Site	0.00		77	20	1.00		237	300	3.00		333	40	373						840	410	1062	40%	425	1486	
03.1.2.5.1.1.1	Shipping				7	0.13	120	16	0	0.00	90	0	0	0						16	7	23	40%	9	33	2 Dec 01
03.1.2.5.1.1.2	Subassembly, Test				5	0.13	120	16		1.00	90	90	15	110						111	20	131	40%	52	183	2 Dec 01
03.1.2.5.1.1.3	Machining, Inspection				5	1.00	120	109	150	1.75	90	158	15	161						330	170	529	40%	210	739	2 Dec 01
03.1.2.5.1.1.4	Procurement				5	0.13	120	16	200	0.75	90	71	10	81						87	215	302	40%	121	423	2 Dec 01
03.1.2.5.1.1.5	Final Design, Drug/Spec Mods	0.00	110	77	4	0.00	120	0												77	4	81	40%	32	113	2 Dec 01
03.1.3	Subsystem Project Mgmt.				500	21.40	154	3296												3296	505	3801	10%	380	4200	
03.1.3.1	Administration/Oversight				300	9.00	154	1463												1463	300	1763	10%	176	1939	27-Nov-01
03.1.3.2	Resource Management				45	1.10	154	183												183	45	228	10%	23	251	27-Nov-01
03.1.3.3	ES&H Assurance				90	2.30	154	367												367	90	457	10%	46	503	27-Nov-01
03.1.3.4	Quality Assurance Program				90	2.57	154	586												586	90	676	10%	68	744	27-Nov-01
03.1.3.5	Systems Integration				30	2.30	154	367												367	30	397	10%	40	436	27-Nov-01
03.1.3.6	Subsystem Cost/Schedule Monitor				30	2.30	154	367												367	30	397	10%	40	436	27-Nov-01
13	Muon Subsystem R&D	11.03	154	1701	754															1701	754	2455	30%	869	3054	
13.1	CSC Subgroup	2.64	154	407	220															407	220	627	20%	125	752	31-Jan-02
13.2	LSDT Subgroup	3.13	154	482	144															482	144	626	20%	125	751	31-Jan-02
13.3	PDT Subgroup	1.94	154	299	203															299	203	502	20%	100	602	31-Jan-02
13.4	RPC Subgroup	1.45	154	223	148															223	148	370	20%	74	451	31-Jan-02
13.5	TTR Subgroup	2.00	154	308	0															308	0	314	20%	63	377	31-Jan-02
13.6	SCAWF Subgroup	0.44	154	68	33															68	33	101	20%	20	121	31-Jan-02
23	ENS Sipp Concept Des, TP Prep	12.00	110	1320	300															1320	300	1620	20%	324	2036	31-Jan-02

J. Paradiso/Draper

1) Refine Alignment Requirements

Hexant Superlayer Straightness (momentum resolution)

- Bending direction = 25 μm (barrel & endcaps)
- Radial offset *(max!)* < 125 μm (barrel; measure w. straightness mon.?)
- Z-offset (barrel) =*??big¿¿*
- Z-offset (endcaps) *(max!)* < 230 μm (28°), 400 μm (17°), 700 μm (10°)
- Radial offset (barrel) =*??big¿¿* (measure w. straightness mon.?)
- Allowed SM axis deviation from IP = ??
- Maximum allowed torque error = ??

Hexant-to-IP and Global Alignment issues

- **Driven by θ(μ) ➡ Large tolerance**
- **200 μm goal in rφ (non-requirement?)**
  - **Point straightness axes at IP**

Hexant local chamber positioning, assembly tolerance

- **Null alignment monitors (stay within range)**
  - **Dynamic range / servo issues?**

- ***Much of this is currently here; finish circa end-June?***

L3 Requirements Analysis (analogy)

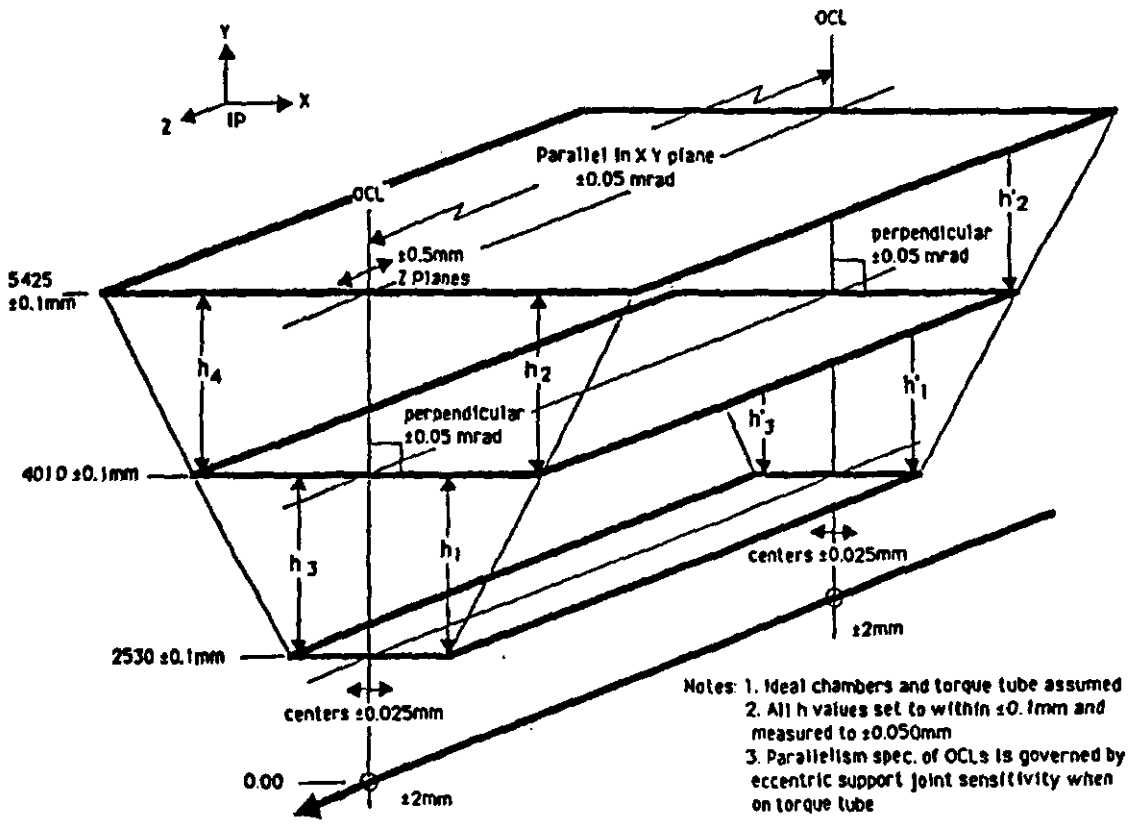

Figure 1-5. Octant array alignment tolerances: prototype design goal limits.

→ **Need for GEM barrel, endcaps!**

2) Evolve baseline alignment definitions into credible configuration

Sector Straightness

- Establish straightness lines, multipoint alignment lines, superlayer interspacing scheme for barrel (LSDT,PDT) and endcaps (CSC)
- Propagation of alignment errors into superlayer/chamber elements
  - Chamber deformation
  - Inter-chamber layer alignment
- Define, test, implement straightness monitor technologies
  - L3 derived 3-point optical monitors
    - → Long path lengths (thermal, small intensity, spot size)
    - → Increase dynamic range (image square, alternate sensors)
  - Identify multipoint technique for application in barrel
    - → Wire, nested SM's, opto-mechanical?
- Define radial (barrel), z (endcap) spacers/measurement scheme
  - "0-dur" rods w. measurement and straightness monitors (barrel)
  - "0-dur" spacer, range measurement, bubble level? (endcaps)
- Special endcap considerations
  - Maintaining alignment of inner chamber segments with no optical path

Results needed by Sept. '92!

Second-Order Necessary Items...

- *Begin investigations into global alignment schemes & technologies*
- *Consider techniques for alignment verification and maintenance. Evaluate alignment implications on hexant assembly procedure. Provide input on chamber positioning tolerances for structures team.*
- *Design alignment tools and fixtures*
  [This should be timed to finish together with the drift chamber design, since both are completely wedded.]
- *Support documentation deliverables*
  [This is ongoing; i.e. TDR, proposal, etc...]
- *Support of TTR testing and providing alignment technology & hardware to chamber teams. Draper role??*

J. Pier-Amory/SSCL

MUON CONFIGURATION CHOICE

Version	Surface facilities	Designing	Production technique	Alignment technique	Planning synchron.	Handling + Removal	Shaft size	Place in the experim.hall	Installation procedure	total
Barrel module 1 by 1	3 - Bldg has been study for this version	3 - Some previous experience available	3 - No special machine tools required	2 - Some previous experience available	3 - Schedule done for this version	3 - No comment	3 - No comment	3 - No comment	2 - Interface with magnet designing not clear	25
Endcap module 1 by 1	3 - Bldg has been study for this version	2 - Some previous experience available	3 - No special machine tools required	2 - Some previous experience available	3 - Schedule done for this version	2 - Not easy due to the shape	3 - No comment	3 - No comment	1- Interface with magnet and FFS not clear	22
Super module Barrel+Endcap grouped	3 - No major modification	2 - No previous experience available	3 - No special machine tools required	2 - No previous experience available, but more compact	3 - Could be an advantage. More time for other instal.	2 - Not easy due to the shape	3 - No comment	3 - No comment	2 - Interface with magnet designing not clear	23 - No endcap overlap
Group of barrel modules	2 - Bldg must be rededined (Enlarged)	2 - No previous experience available	2 - Special machine tools required but not to design	1 - No previous experience available	2 - Could be an advantage	1- Not easy due to the shape	3 - Group of 3 modules only or new gantry	2 - No place enough or install. from the surface	1 - Loading problem to solve	16
Group of Endcap modules	2 - Bldg must be rededined (Enlarged)	2 - No previous experience available	2 - Special machine tools required but not to design	1 - No previous experience available	2 - Could be an advantage	1 - Not easy due to the shape	3 - Group of 4 modules only	2 - No place enough or install. from the surface	1 - Loading problem to solve	16
All the barrel modules	0 -Presently No place anywhere	1 - Stiffness for the required precision	2 - Special machine tools required but not to design	1 - No previous experience available	3 - Could be an advantage	0 - Deform. expected 160 t	1 - Probably to be enlarged. Local gantry unusable	2 - No com.- Install. from the surface	1 - Magnet to be re-inforc. only for install.	11
All the endcap modules	0 -Presently No place anywhere	1 - Stiffness for the required precision	2 - Special machine tools required but not to design	1 - No previous experience available	3 - Could be an advantage	1 - Deform. expected 55 t	2 - No comment - But local gantry unusable	2 - No com.- Install. from the surface	1 - Loading prob.-Install. from the surf. - FFS to design	13
Barell mod.1 by 1 + All the endcap mods. together	1 -Presently No place anywhere for the Endcaps	2 - Average of 3 for barell+ 1 for Endcap	2 - Special machine tools required but not to design	1.5 - Aver.of 2 for barrel+ 1 for endcap	2 - Could be an advantage	2 - Aver.of 3 for barrel+ 1 for Endcap	2 - No comment - But local gantry unusable	2.5 - Aver.of 3 for barrel+ 2 for endcap	1 - Loading prob.-Install. from the surf. - FFS to design	16

Stor.

Appreciation score
3 - No basic problem - Technique well know or extrapolation possible to previous experience with minimum risk of appreciation
2 - Some basic problems - Technique not perfectly know - No extrapolation possible to previous experience
1 - Fondamental problems - Technique to improve - Problematic fiability
0 - Fondamental problems - Technique to discover - Big risk of appreciation

PRD/JPA
5/17/92

GEM
Proposal of a common loading device for Barrel and Endcap modules

1 - Introduction
The purpose of this memo is to present a solution to install the modules in the magnet. The same device is used for Barrel and Endcap modules. That supposes some modifications in the respective structures.
2 - Principle (See drwg: Loading device)
A large crown has in its center a balanced weight which is remote controled. This large crown can be lift by means of a special lifting ring in which a calibrated loading washer has been installed. A control box manages the crane according the informations given by the loading washer and the balanced weight. Inside the large crown, a ring can rotate by means of some rotation drivers. A specific removable holder (one for each type of module) is fixed on this internal ring.
3 - Explanation (See drwg 1 to 14)
3.1 - Barrel mod. arriving in the headhouse.
The trailer and partially the transport fixture are common to the 2 types of modules (see also drwg 8)- The "up-side-down position" of the mod. is proposed for the simplification of its transport fixture and also because actually the mod. will be produced and stored in this position. For further reason, some temporary re-inforcement bars are installed in each mod.(Barrel's and Endcap's)
3.2 - Lifting down to the experimental hall
A special lifting beam is required. This lifting beam has a remote controled balanced weight according the CG of the module (which is different from a mod. to another one, even we are speaking about the same type of mod.)
The storage feet are still fixed on the mod. When arriving on the floor the 1st operation is to displace the balanced weight of the lifting beam, then to disconnect it from the mod. and go back up - Place is now free for the loading device.
3.3 - Connection with the loading device
The right position of the interface is obtained by moving the balanced weight of the loading device.
3.4 - Transfer of the weight
At this stage of the operations the position of the balanced weight will direct the tension of the crane cable - That will be done through the loading washer installed in the lifting ring.
In other words, the finest lifting speed of the crane is directed by the displacement of the balanced weight, and the tension of the cable is permanently check by the loading washer.

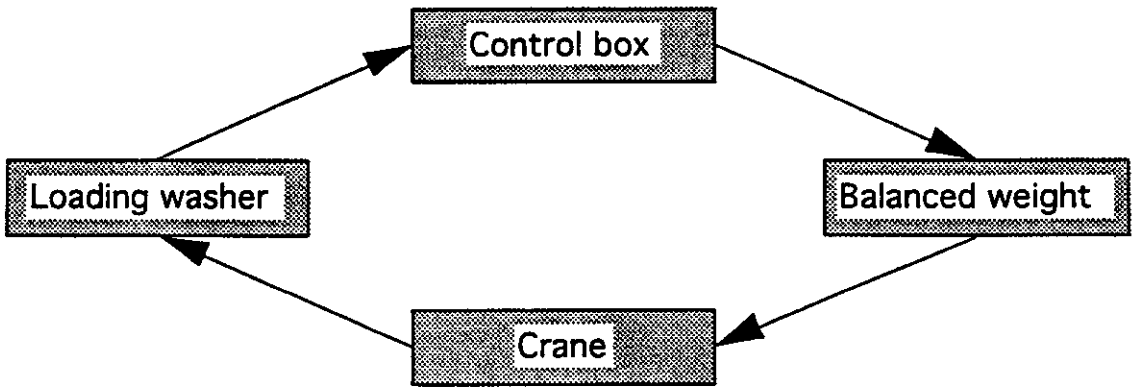

For the 1st mm's an additive checking could be done with an inductive sensor measuring the distance between the ground and the loading device

3.5 - Rotation at the design orientation and installation in the magnet

As soon as the total weight is hold by the crane cable, the rotation drivers turn the mod. at the design orientation - A very high angular precision is not required (See communication : **Installation procedure**)

To facilitate and accelerate the loading procedure a small rail or rope guides the mod. during its introduction in the magnet.

3.6 - Fixation of the module and transfer of the weight

As soon as the module is fixed at its design orientation (See communication : **Installation procedure**) gently untighten for approx 1mm the screws between the module and the specific adaptator and start to move the balanced weight - When the loading washer indicates that the weight of the loading device is entirely hold by the cable, the screws should be free to remove.

3.7 Separation of the loading device and removal of the temporary re-inforcement bars

The position of the screws as well as the position of the adaptator give us an indication about the total transfer of the weight. The last operation is the removal of the temporary bars - Special brackets will be design in the loading device the put them on the ground.

During all these sequences another module could be lift down into the experimental hall

From fig.8 to fig.11 no explanation seem required

3.12 - Installation of the last endcap mod. in the magnet.

The last endcap mod. to install will be one of those which the last outer chamber is outside of the structure (z=16250) and in the 6h position. With this procedure only one chamber of the last module has no overlap (z=14750) - See 2 handmade drwgs.

4 - Overall dimensions and weight

See attached drawing

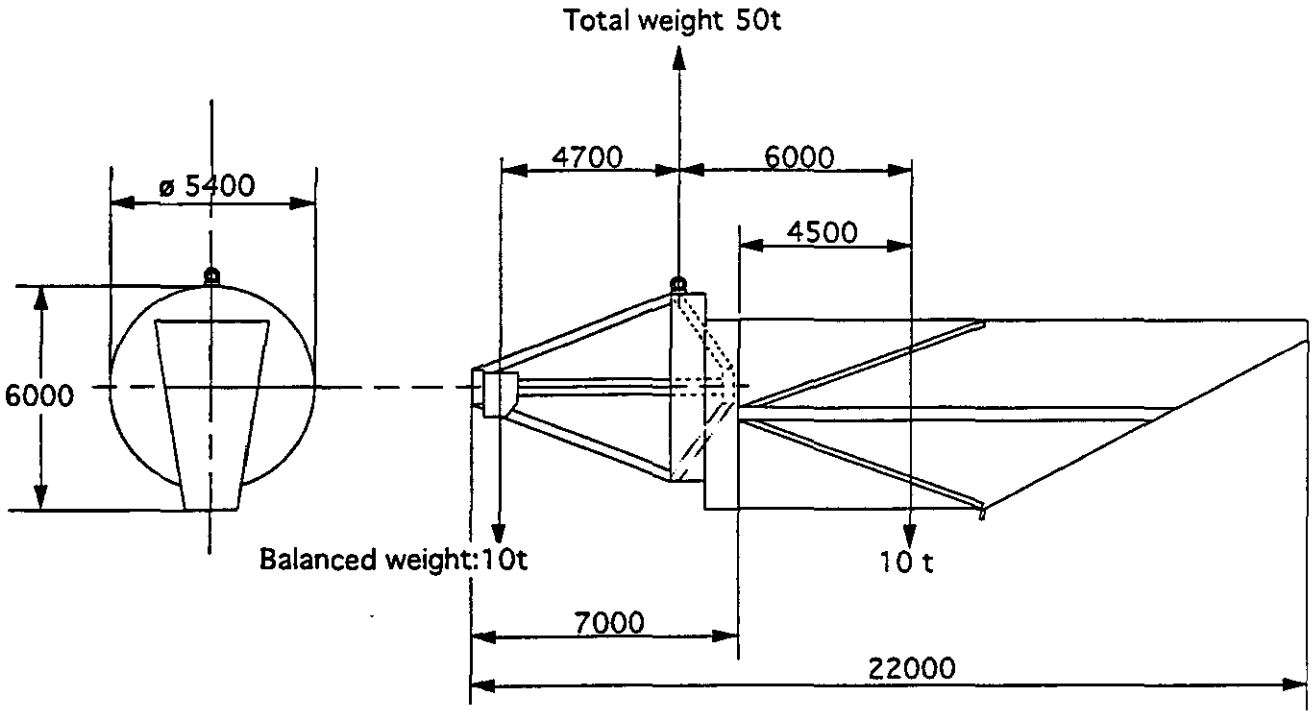

PRD/JPA
5/14/92

LOADING DEVICE

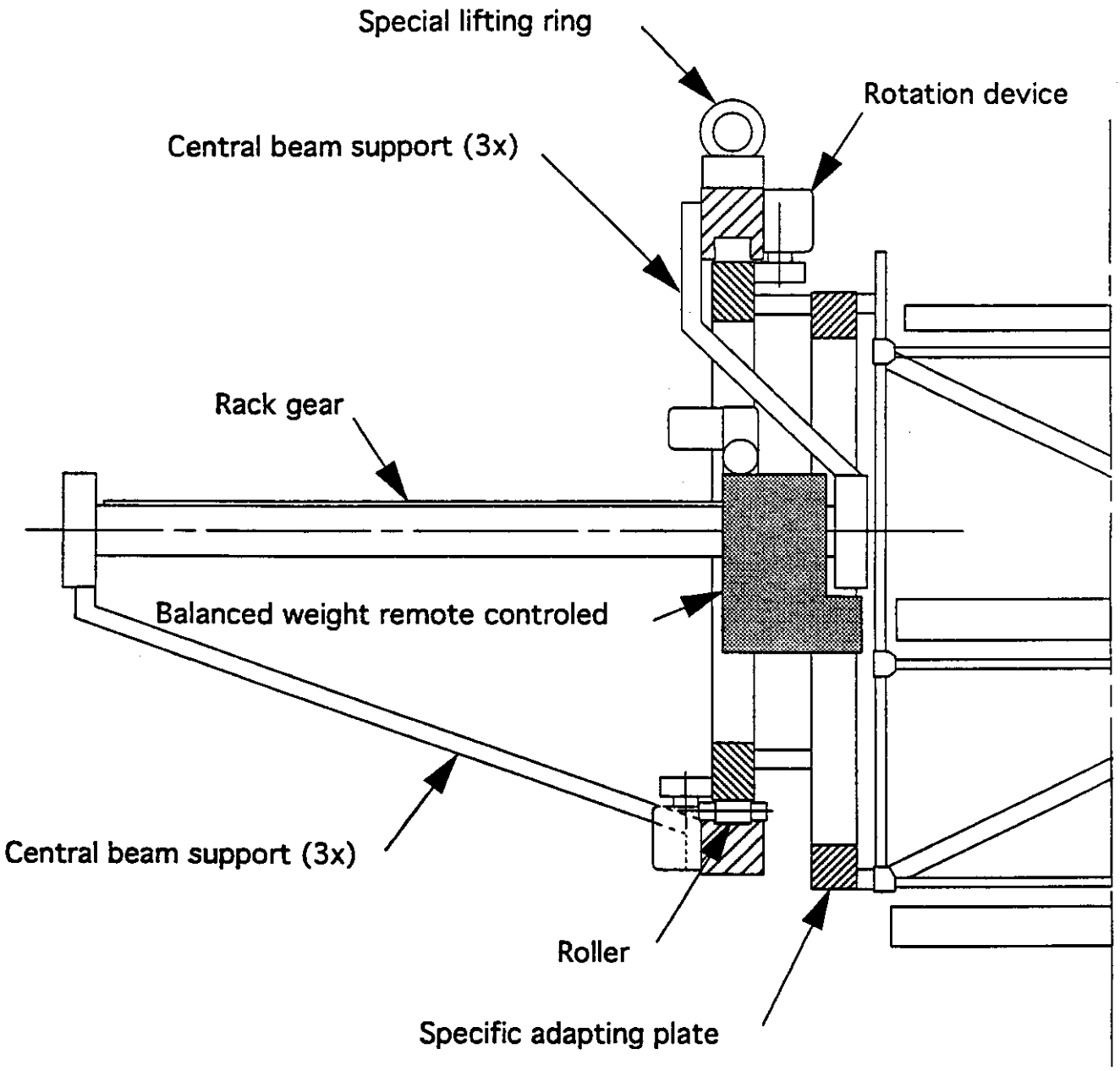

PRD/JPA
5/14/92

1 - Barrel mod. arriving in the headhouse

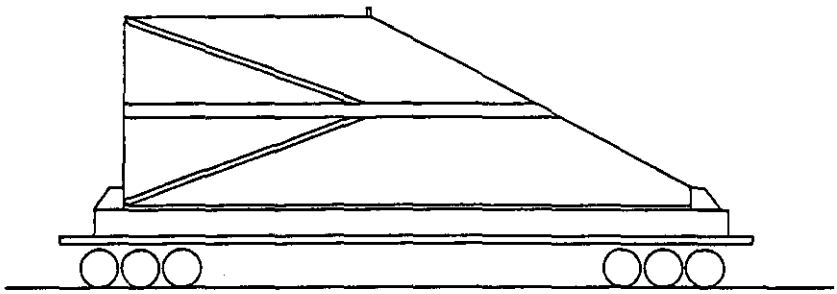

2 - Lifting down to the experimental hall

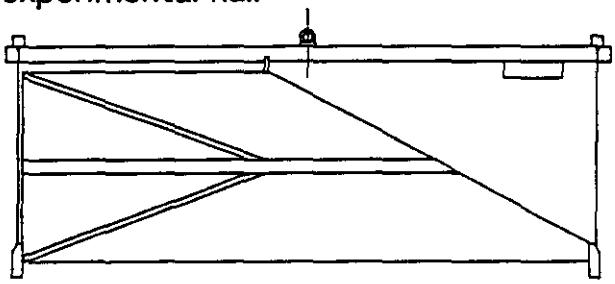

3 - Connection with the loading device

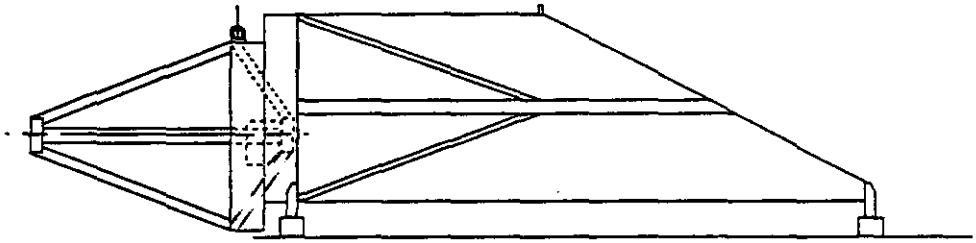

4 - Transfert of the weight

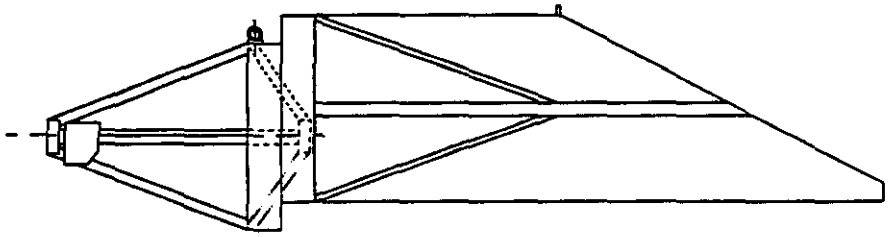

5 - Rotation at design orientation and installation in the magnet

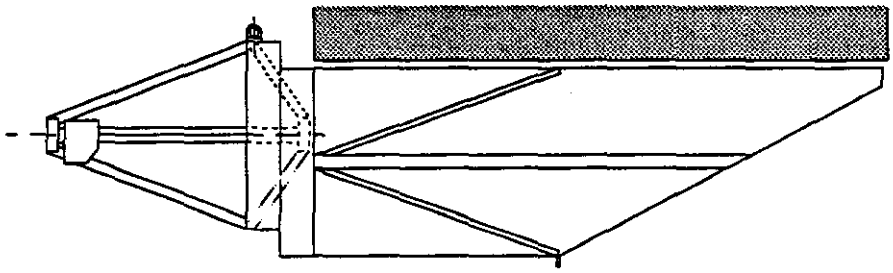

PRD/JPA
5/14/92

6 - Fixation of the module and transfert of the weight

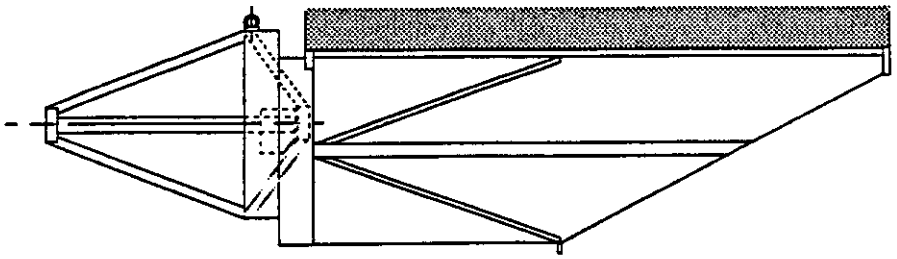

7 - Separation of the loading device and removing of the temporary re-inforcement bars

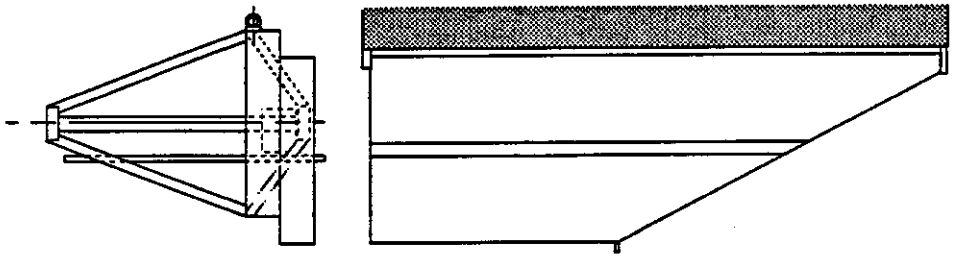

8 - Endcap mod. arriving in the headhouse

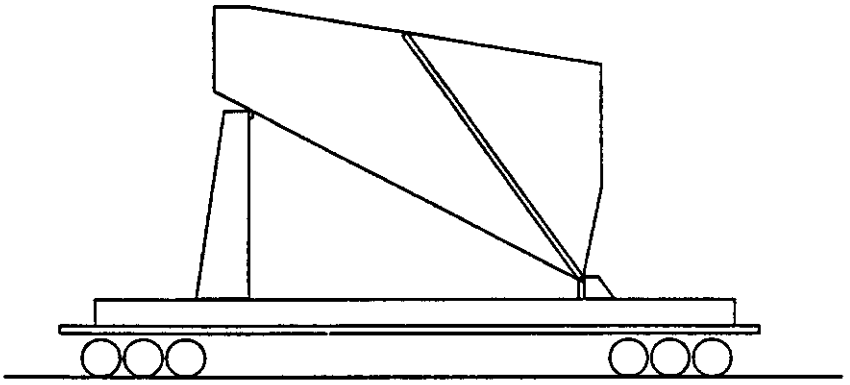

9 - Lifting down to the experimental hall

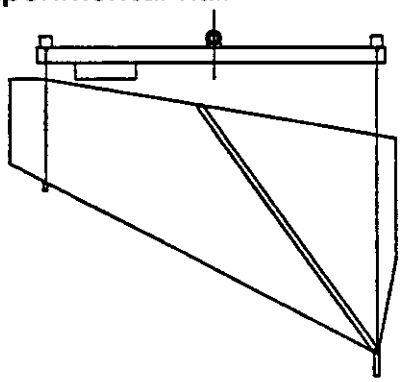

PRD/JPA
5/14/92

10 - Connection with the loading device

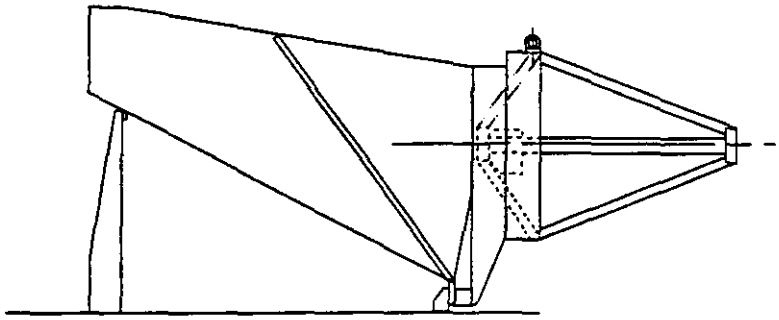

11 - Transfert of the weight

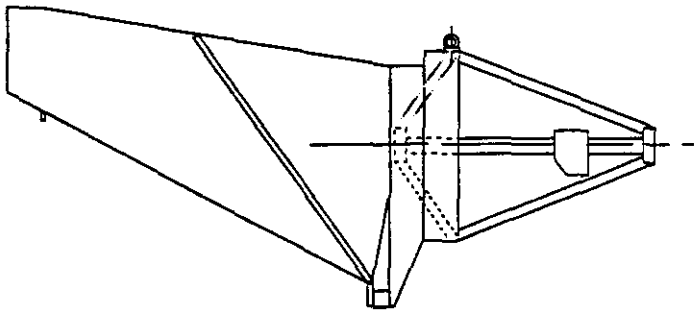

12 - Rotation at the design orientation and installation in the magnet

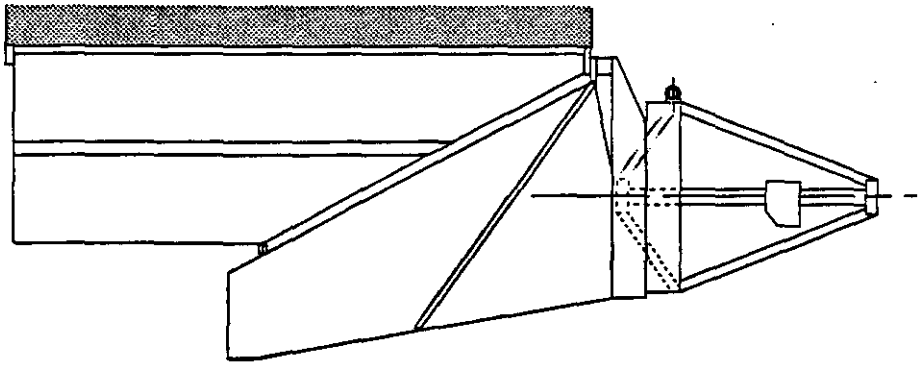

13 - Fixation of the module and transfert of the weight

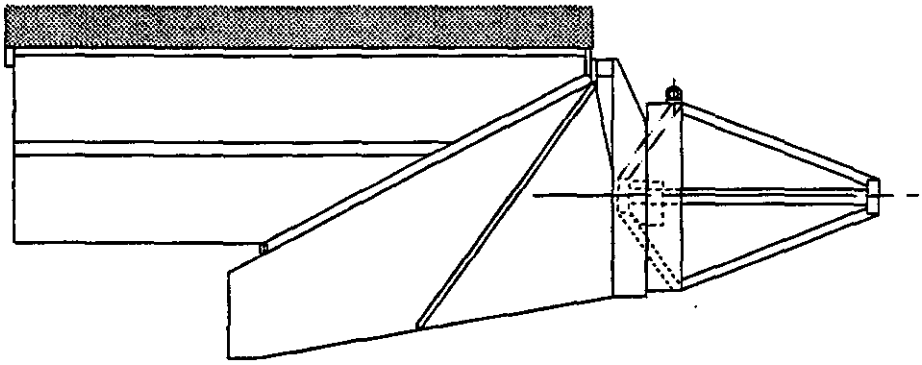

PRD/JPA
5/14/92

14 - Separation of ther loading device and removing of the temporary re-inforcement bars

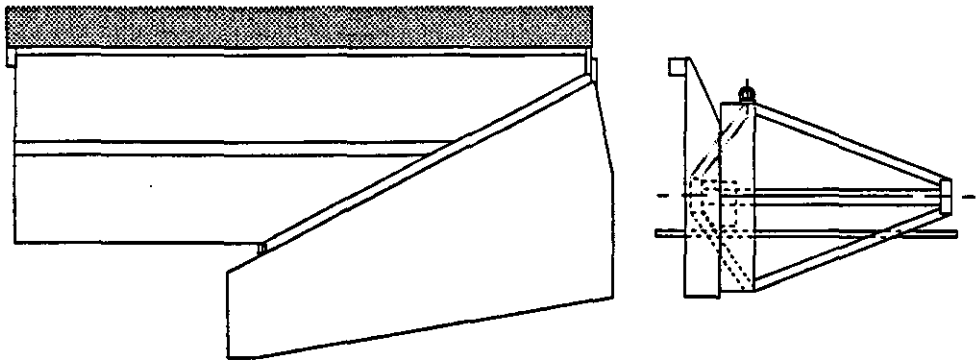

PRD/JPA
5/14/92

- [illegible]
- To call attention to everybody about some [illegible]

1 - Inspection of the components

- Casting cracks or failures to prevent any gas leak
- Machining : Heli-coils missing or bad fitted, deburring not made, operations missing,etc..
- Last modifications to introduce : last improvements required by the physicists, by the electronicians, by the technicians, etc...
- Inside electronic components, pipe or electronic connections not at the quality level required

2 - Dirty assy

- To be sure that all the components or sub-assies coming from varied manufacturers, are fittable together
- An additive machining will be very delicate to do in a clean room
- To prevent any mechanical deformation

Note: In this area we need place enough to rotate the chamber to have a fast access to all the faces of the item (turning fixture)

3 - Dismantling and cleaning

- Final assy in a clean room
- The size of some pieces are too big to do a very hard cleaning without dismantling

4 - Final assy in a clean room

- In the clean room a turning fixture is required for the following reasons
  - Fast access to all the faces of the chamber
  - Very rigid frame to prevent any deformation (flatness, squareness, etc...)
  - No crane is available
- The wire plane assy area is a clean place (the cleaning of the wire is required)

5 - Gas and electronic tests

- Will be done 2 times
  - Before leaving the manufacturer, by a SSCL's employee responsible for the quality control
  - On-site, in the muon assy bldg before installation on a structure

NOTE : During the tranport and the storage of chambers, some precautions to preserve the flatness and the squareness are required

PRD/JPA - 5/17/92

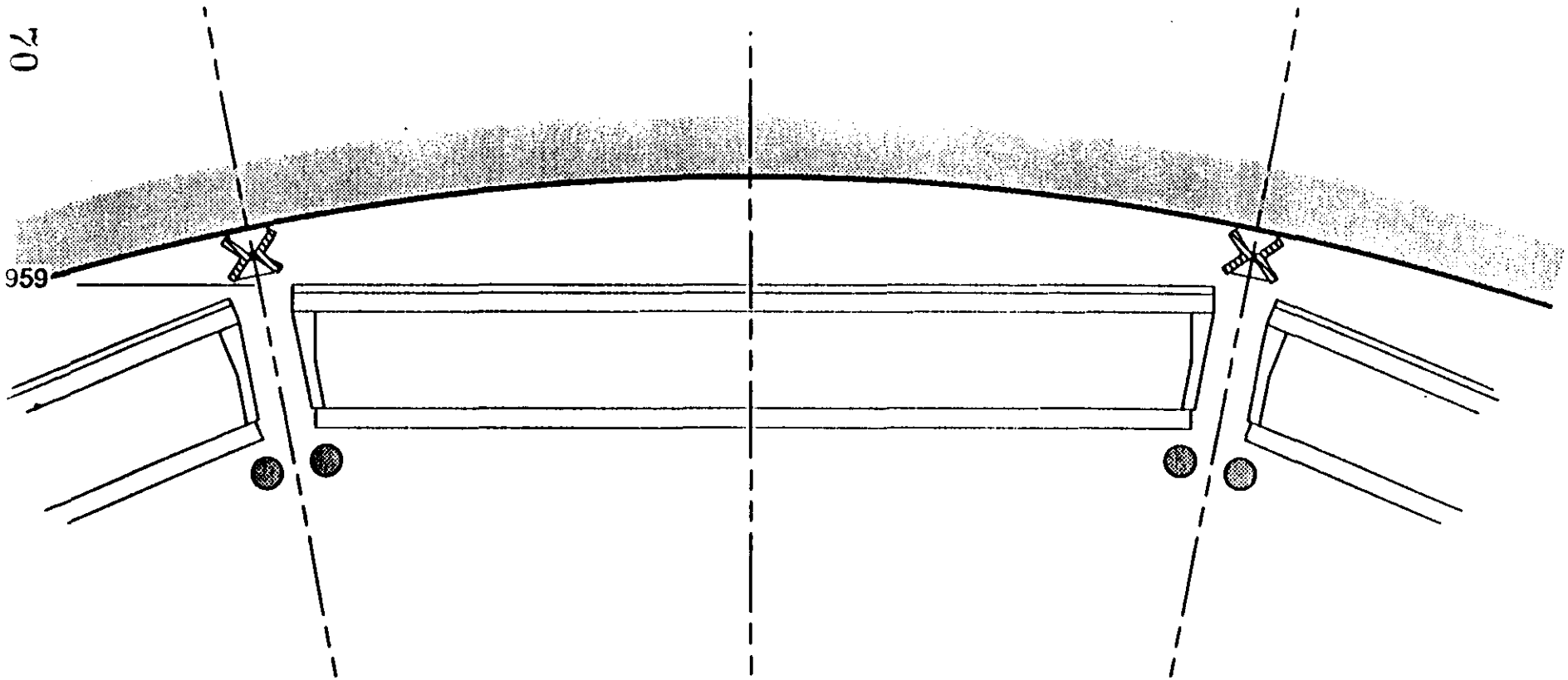

Figure V.9: Rails for translation of central modules into magnet

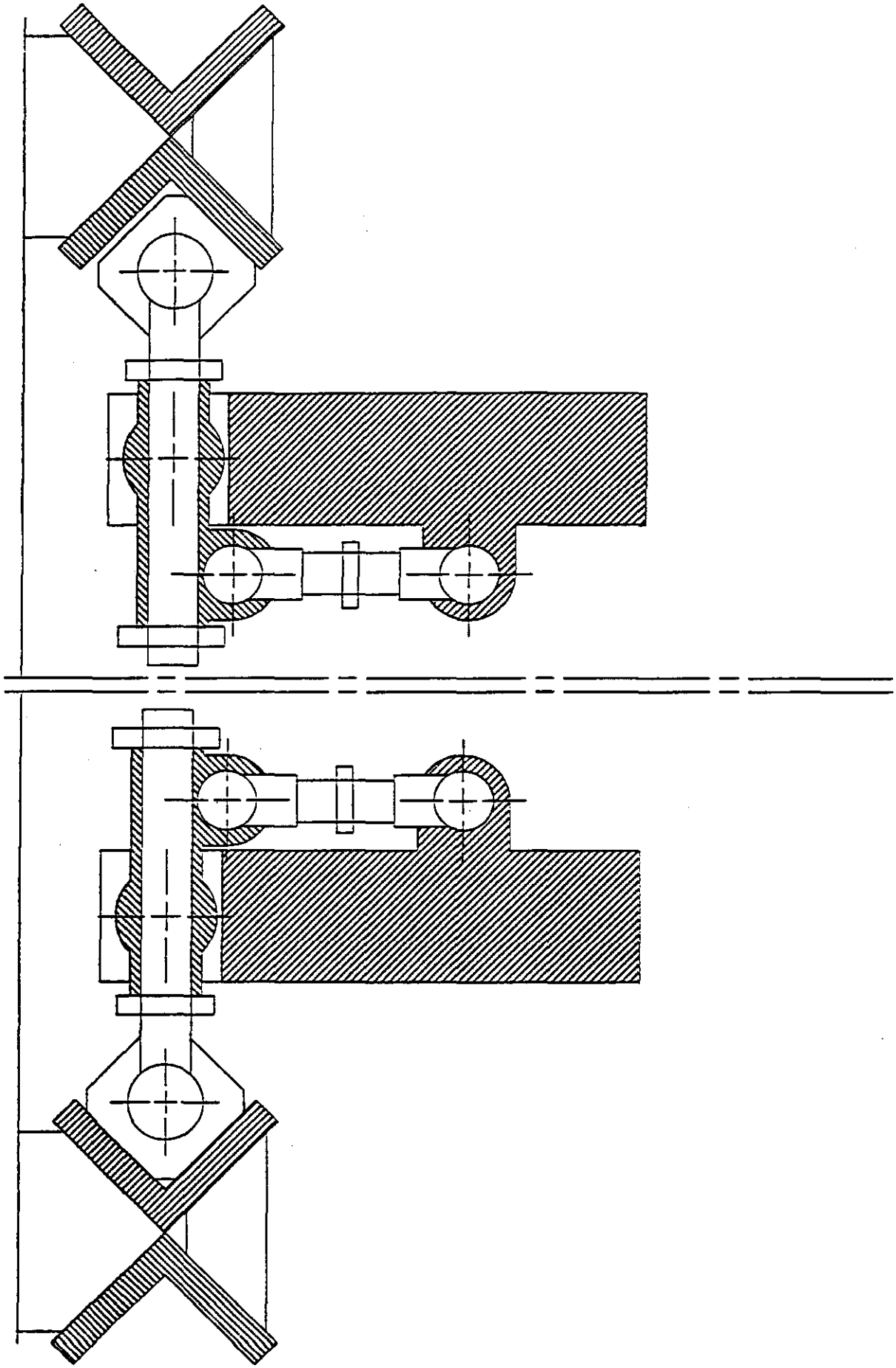

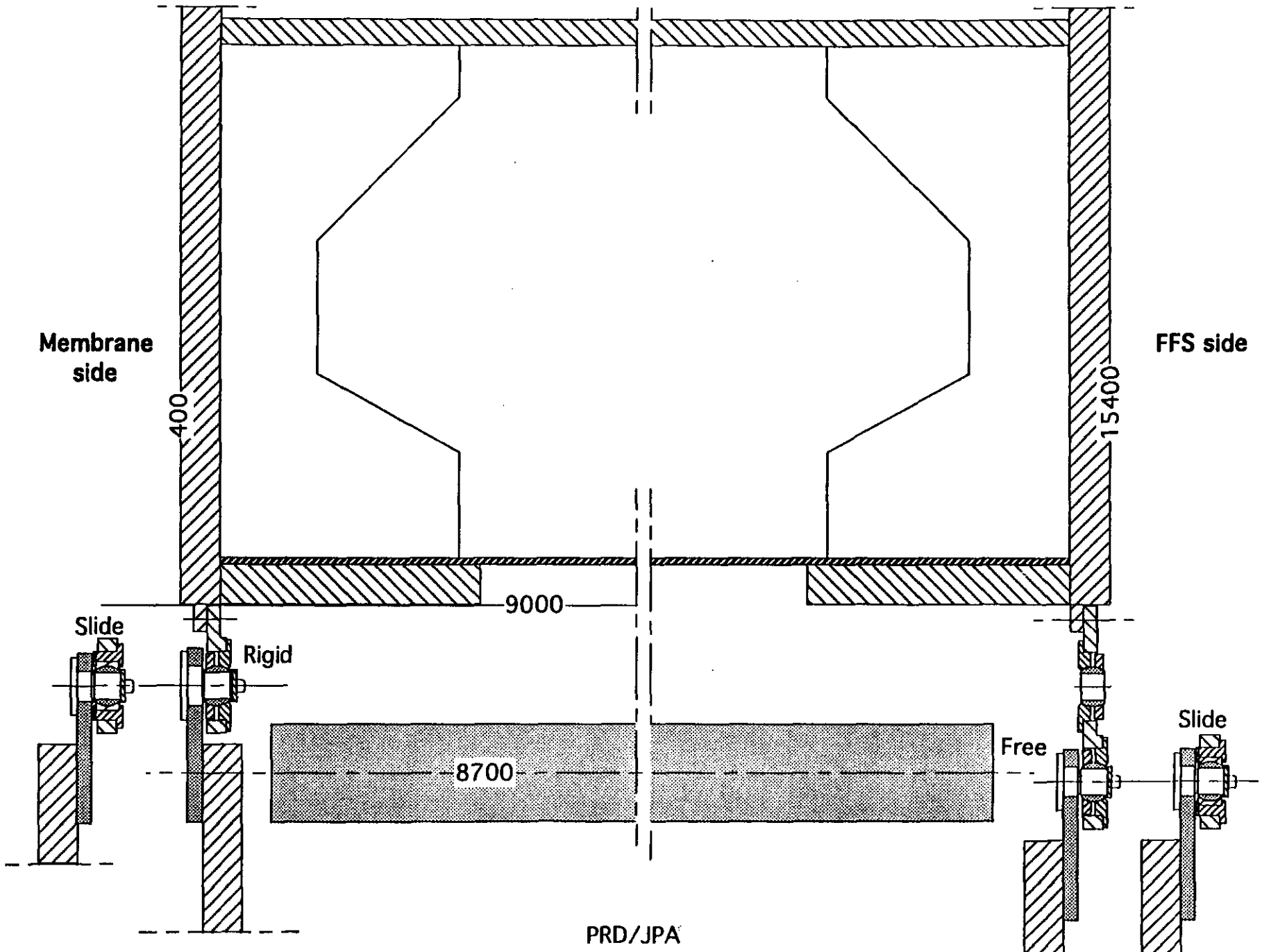

PRD/JPA
5/16/92

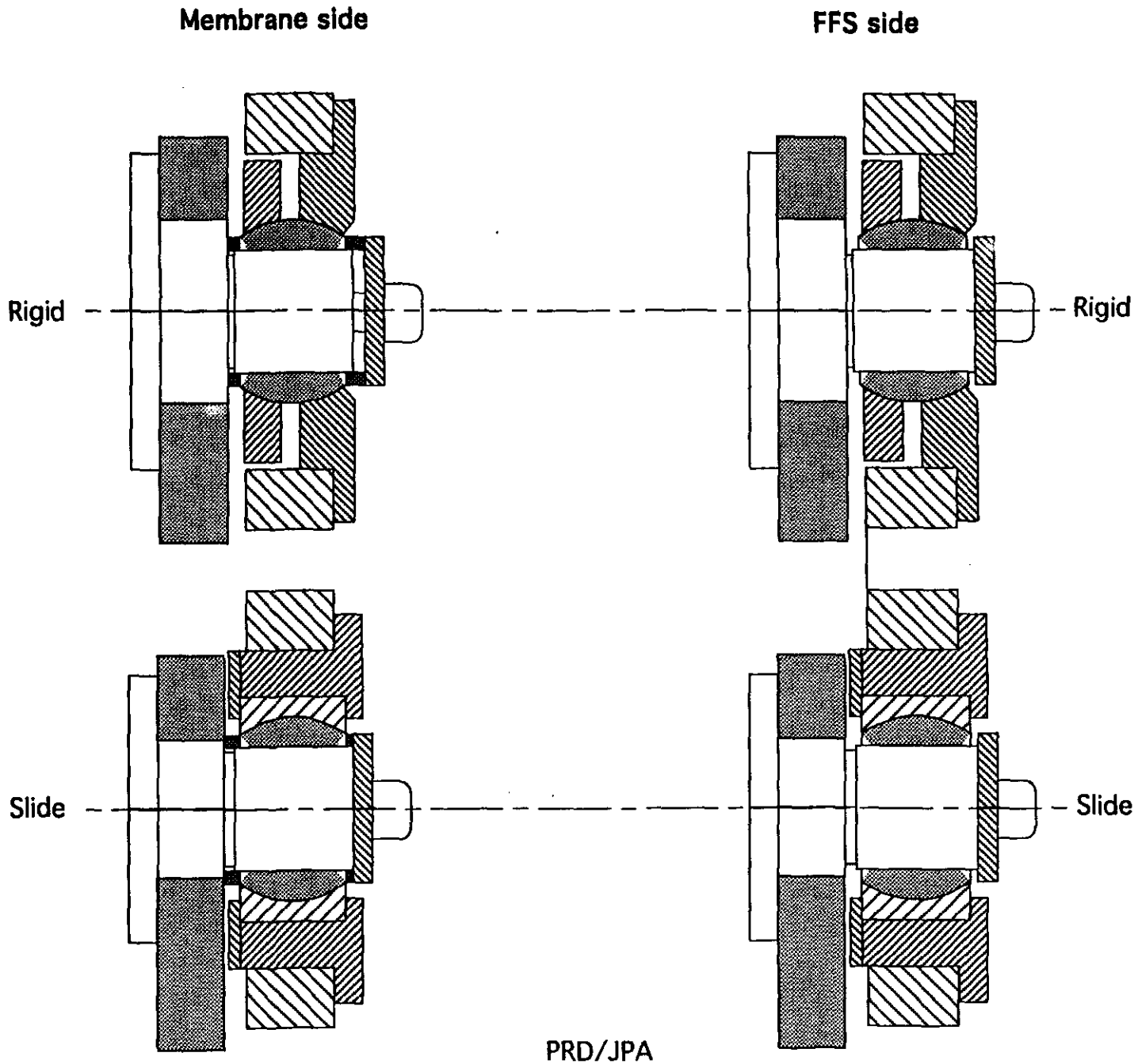

PRD/JPA
5/16/92