K.4.6.6

PREVIOUS NUMBER
GEM-TN-92-90

GEM IN-92-3
Rev. A

Liquid Argon Calorimeter Cost Review Meeting - SSCL

April 22, 1992

Abstract:

Transparencies of the presentations at the April 22, 1992 Liquid Argon Calorimeter Cost Review Meeting. Agenda items were: Resolution vs. Angle, Thickness; Status of Engineering; Cost Estimate; R&D Issues; Foreign Contribution Models; Preradiator; and Separate EM, EM+Forward.

gem

Presentation by:

H. Gordon

April 22, 1992
H. Gordon

Liquid Argon Cost Review

Table of Parameters

Resolution vs. angle, thickness

Status of Engineering - Lyle Mason

Cost Estimate - Jodi Coulon

R&D Issues -

- EM energy resolution
- EC EM Construction - flat?, cracks
- Length of barrel
- Modules near $\eta=3$
- hadronic modules

Foreign contribution models

- EM - modules China
- Hadronic modules - Russia
- Cryostat - Korea

Preradiator

- Problems being studied --- Leltchouk's solution best for accordion

Separate EM, EM+forward,

Problem of services

60 M EM
76 M

Volume effect + - cheaper

GEM Liquid Argon Calorimeter

1/4 Section "Off Vertical"
Copper Hadron Absorber

Shows General Configuration with Electronic feed throughs

CENTRAL BARREL CALORIMETER WEIGHT =775 MT
ENDCAP CALORIMETER WEIGHT = 505 MT each
TOTAL CALORIMETER WEIGHT = 1785 MT
Weights have zero Margin

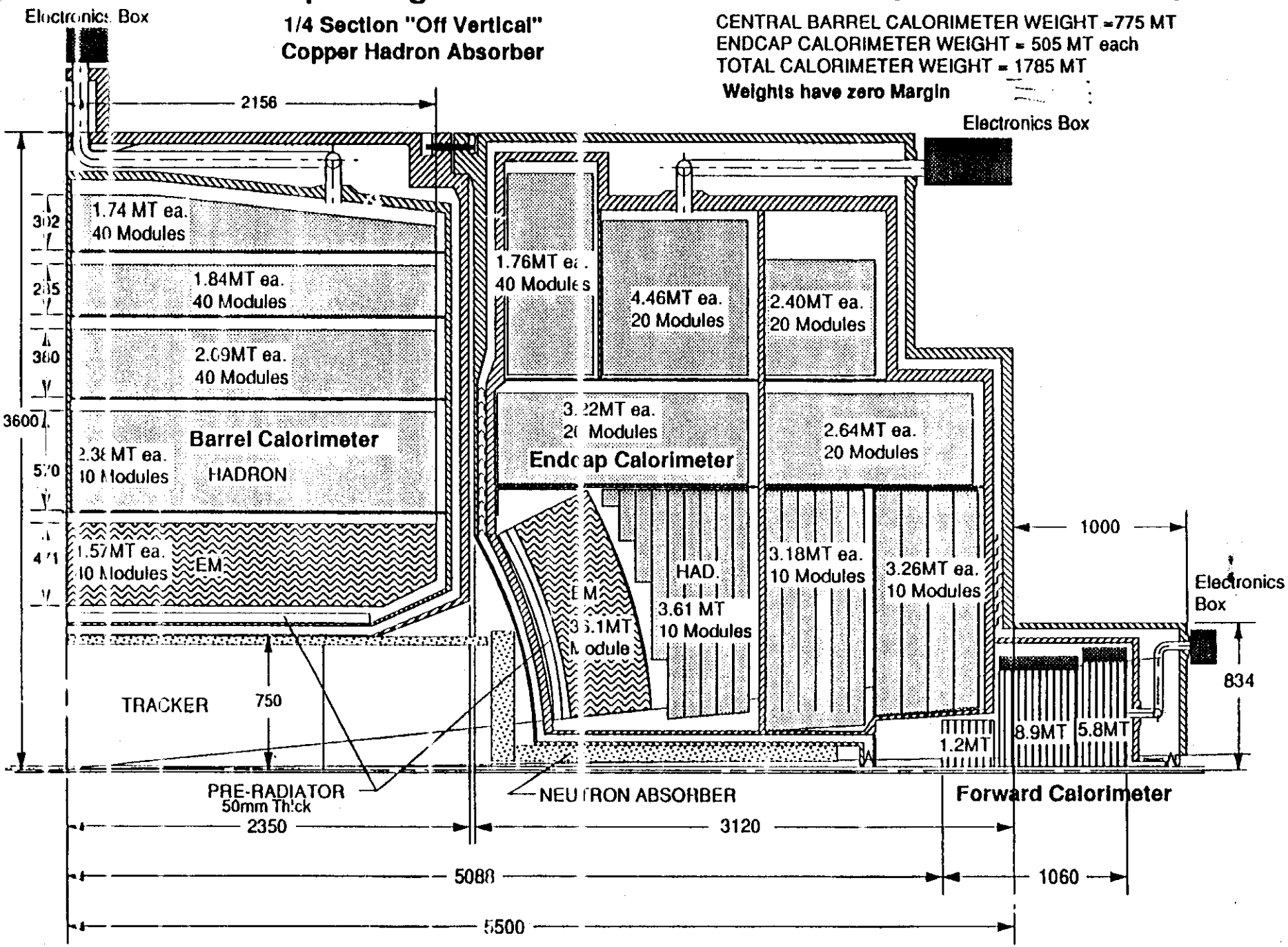

LLMason 3/23/92

EM Configuration Goal $\leq 7.5\%/\sqrt{E}$

"1mm" option

increase sampling frequency

1mm OPTION

P=
X.=
Ri=
Rs=21.1%
Cell=6.6mm

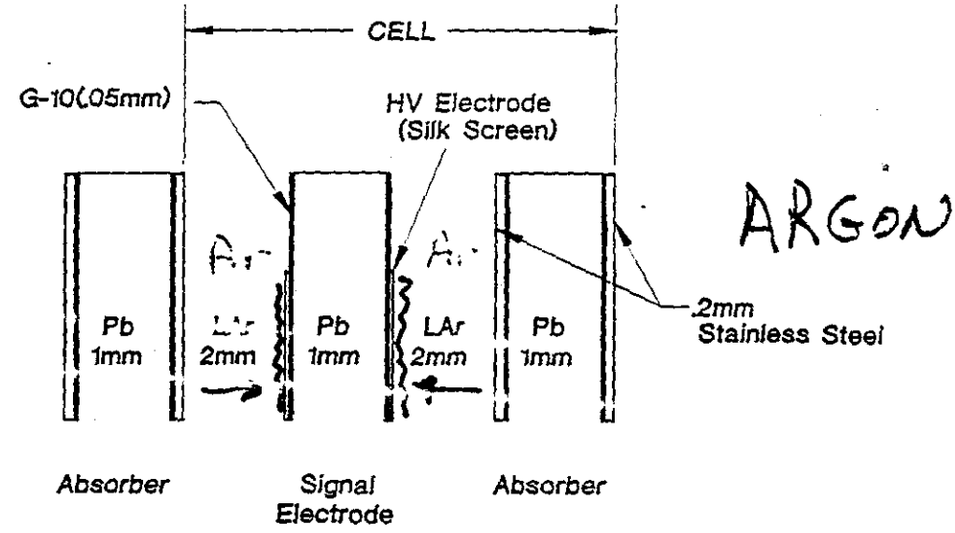

ARGON

"2mm" Option

decrease absorber thickness

increase sampling fraction

2mm OPTION

P=
X.=
Ri=
Rs=22.8%
Cell=6.6mm

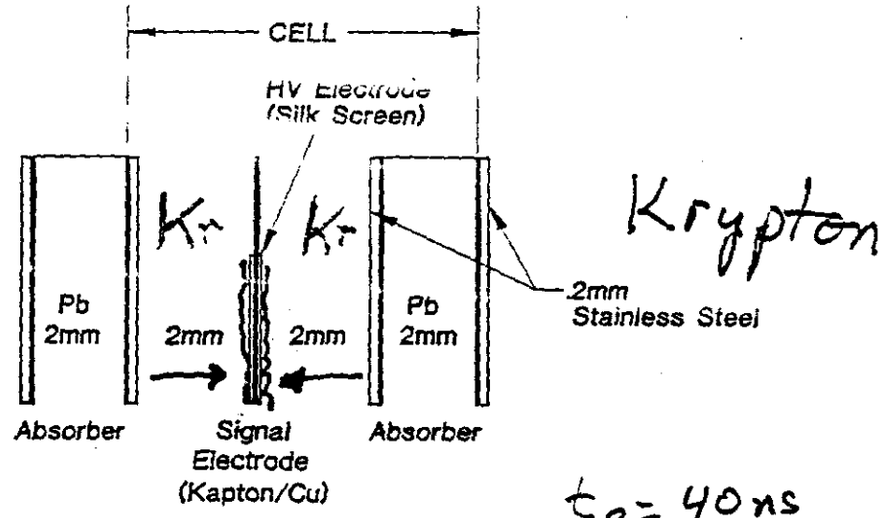

Krypton

$t_p = 40\,ns$

Goal [redacted] $\frac{7.5\%}{\sqrt{E}}$

1.0 Liquid Argon Calorimeter Baseline Option

1.1.0 Primary Physics Goals

1.1.1 Lead/Liquid Argon EM Calorimeter (EM)

•Precision energy measurement of isolated photons or electrons.

•Precision impact coordinate measurement at the front surface of the calorimeter for isolated photons and electrons; momentum vector determination, using two longitudinal segments of the EM calorimeter.

•e/π separation using longitudinal and transverse segmentation.

•Search for narrow resonances by reconstructing the invariant mass of multi-photons or electrons.

1.1.2 Liquid Argon/Copper Hadron Calorimeter (HAD)

•Electron and photon identification (hadron veto).

•Muon identification, isolation, and pattern recognition.

•Muon energy loss measurement.

•Jet energy measurement.

•Missing energy measurement (using also EM and Forward calorimeters).

1.1.3 Forward Liquid Argon/Tungsten Calorimeter (FWD)

•Missing energy measurement (using also EM and HAD calorimeters).

•Jet tagging.

1.2.0 Secondary Physics Capabilities

•Provide a fast trigger for tagging the beam crossing.

•Rejection of backgrounds with isolation cuts at the trigger level.

1.3.0 Unique Physics Capabilities

•Higgs searches: $H^\circ \rightarrow \gamma\gamma$

$t\bar{t}\ H^\circ/WH^\circ \rightarrow \gamma\gamma$

$H^\circ \rightarrow e^+e^-e^+e^-$ (including ZZ*).

•Toponium searches: $\eta_t \rightarrow \gamma\gamma$

•$Z^{\circ\prime}$ searches: $Z^{\circ\prime} \rightarrow e^+e^-$.

•Search for unknown narrow resonances which decay to multi-photons and/or electrons.

•Jet energy measurements up to the highest energies.

•Missing energy at the 100 GeV level.

1.4.0 Physics Performance

Time resolution

$E_{EM} \geq 20$ GeV, $\Delta t \leq 1$ ns
$E_{jet} \geq 50$ GeV, $\Delta t \leq 3$ ns

Speed shaping time

EM	40 ns
HAD	50-200 ns
FWD	16 ns

Noise (thermal/pileup)	
EM	20/32 MeV/channel
HAD	130/118
MeV/channel	
Hermeticity (E_t Measured)	$0 < \eta < 5.5$
EM energy resolution	$7.5\% / \sqrt{E} \oplus 0.5\%$
EM position resolution	$4.4\text{mm} / \sqrt{E}$
EM dynamic range	10^5(upto10TeV/tower)
Hadron energy resolution (Jets)	$60\% / \sqrt{E} \oplus 2\%$
Hadron dynamic range	10^5 - 50 MeV to 5 TeV

Number of absorption lengths	
at η=0	11.4
at η=3.0	~14.0
Barrel Dimensions	
inner radius	0.75m
outer radius	3.60m
Lateral segmentation ()	
EM	0.032 x 0.032
HAD	0.08 x 0.08
Longitudinal segmentation	2 EM, 4 HAD

1.5.0 Physical Parameters

1.5.1 Lead Liquid Argon/EM Calorimeter

Absorber material	0.2mm SS/0.1mm prepreg/1.3mmPb/ 0.1mm prepreg/0.2mm SS
Readout Board	0.4mm(kapton/Cu/kapton)
Sense Material	2 x 2 mm argon
Lateral segmentation (η, ϕ)	0.032 x 0.032
Longitudinal segmentation	2(8 X_0, 17 X_0)
Inner Radius (cryostat/accordion)	750/925 mm
Outer Radius (accordion)	1396 mm

Radiation Length	25 X_0
Absorption Length	1.3 λ
Number of Channels-Total	62,000
Readout Device (75 mW / channel)	JFET preamplifier
Weight of Assembly	135 MT
Weight of Barrel	62.8 MT
Weight of Each End Cap	36.1 MT

1.5.2 Liquid Argon/Copper Hadron Calorimeter

Lateral segmentation (η, ϕ)	0.08 x 0.08
Longitudinal segmentation	4
Dimensions	
Inner Radius (active)	1,469 mm
Outer Radius (active)	3,250 mm
Length (excluding forward)	11,000 mm
Copper Absorber Thickness	9 mm/16 mm
Sense Material: Argon	2 mm
G10 Thickness	2 x 0.5 mm
Readout	
Channels - total hadron	22,000
Weights	
Copper (barrel)	646 MT
(end cap - each)	425 MT
Structural Components - Aluminum	
Cryostat Plus Structure (barrel)	63 MT
(end cap - each)	50 MT
Assemblies (including EM and vessel)	3 Each
Barrel Weight	775 MT
End Cap Weight (each)	505 MT
Forward (each)	16 MT
Total	1,785 MT
Liquid Volume	
Barrel	39,560 liters
End cap (each)	26,410 liters
Total	92,380 liters
Total number of channels	84,000

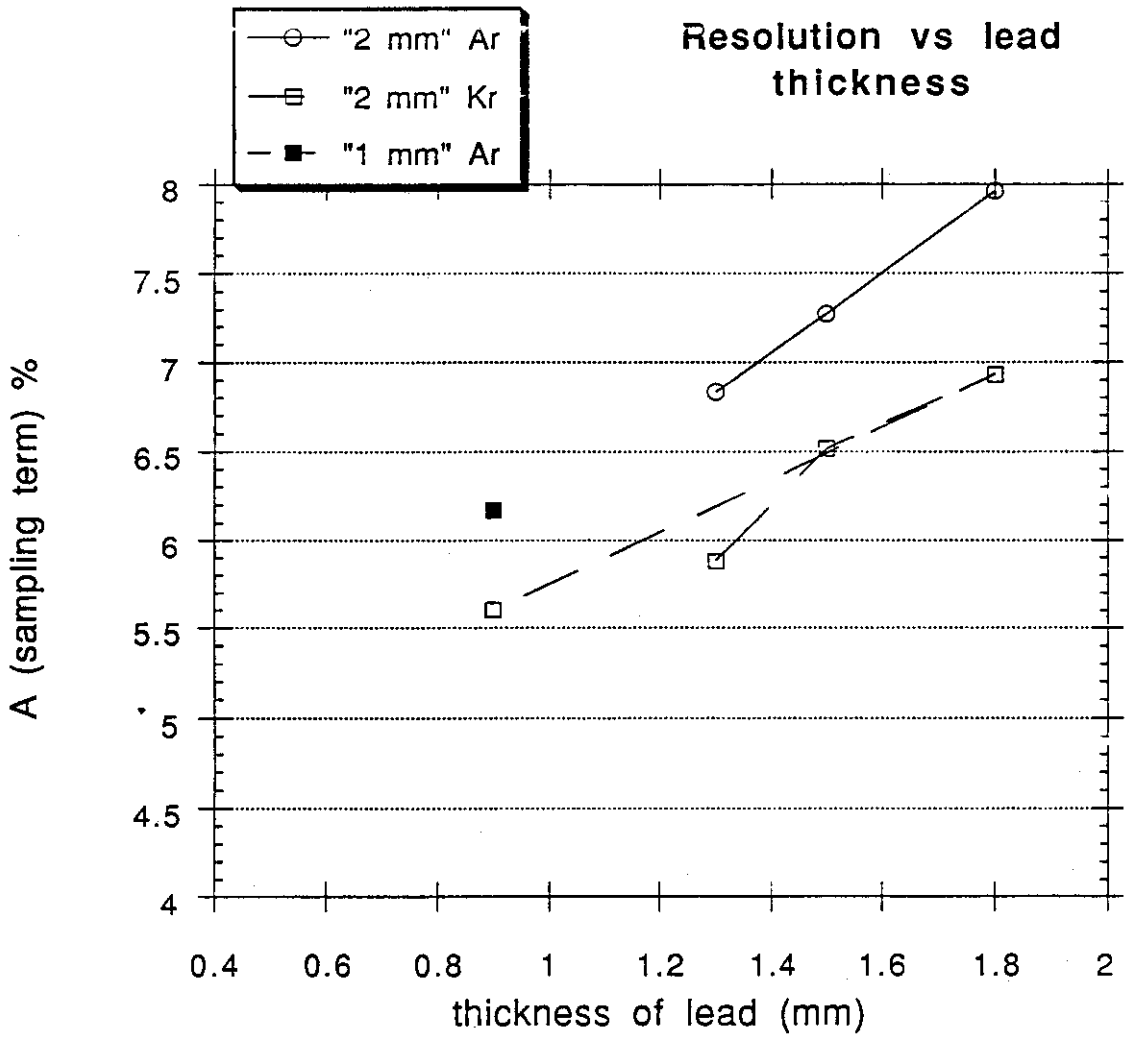
"2 mm" Ar
"2 mm" Kr
"1 mm" Ar
Resolution vs lead thickness
A (sampling term) %
8
7.5
7
6.5
6
5.5
5
4.5
4
0.4
0.6
0.8
1
1.2
1.4
1.6
1.8
2
thickness of lead (mm)

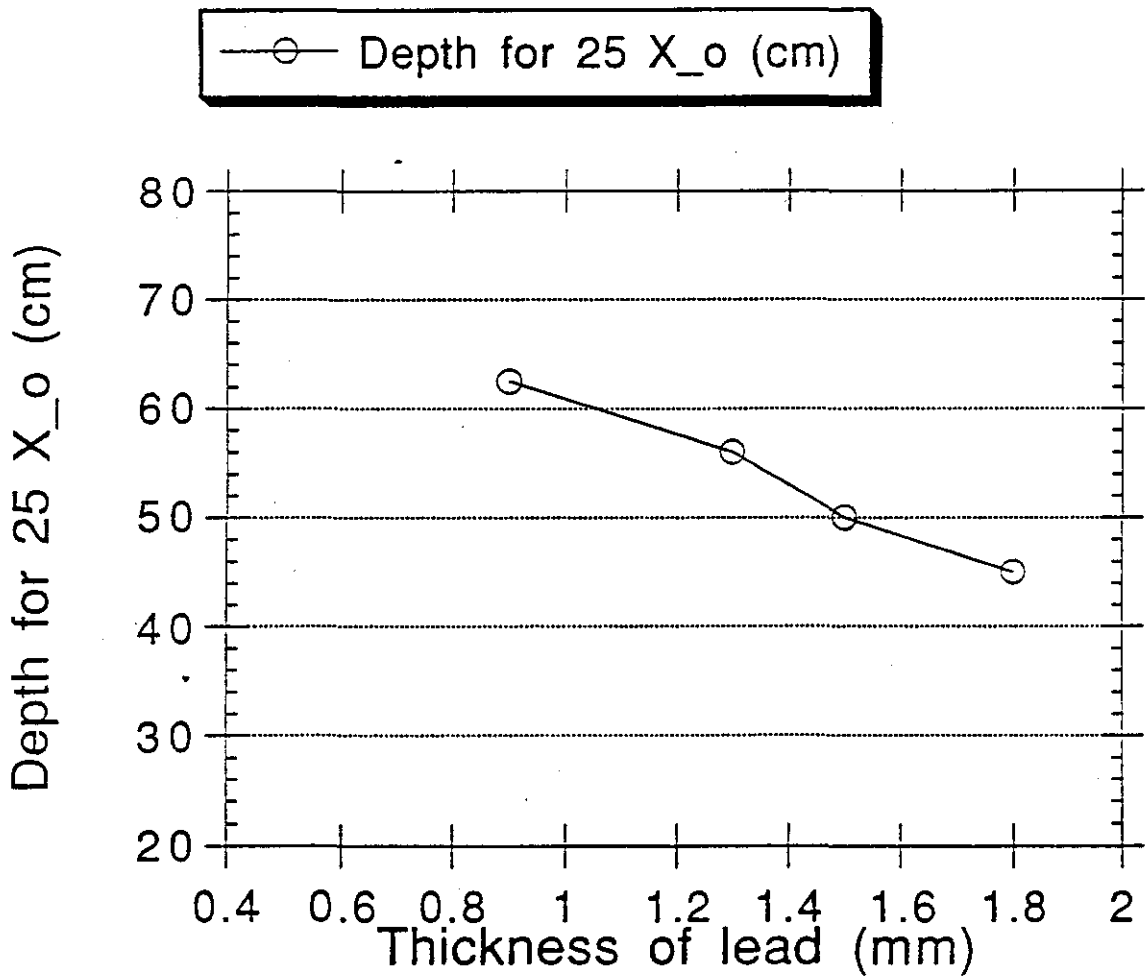
Depth for 25 X_o (cm)
80
70
60
50
40
30
20
Depth for 25 X_o (cm)
0.4
0.6
0.8
1
1.2
1.4
1.6
1.8
2
Thickness of lead (mm)

No cryostat, non-uniformity corrected, average

Accordion

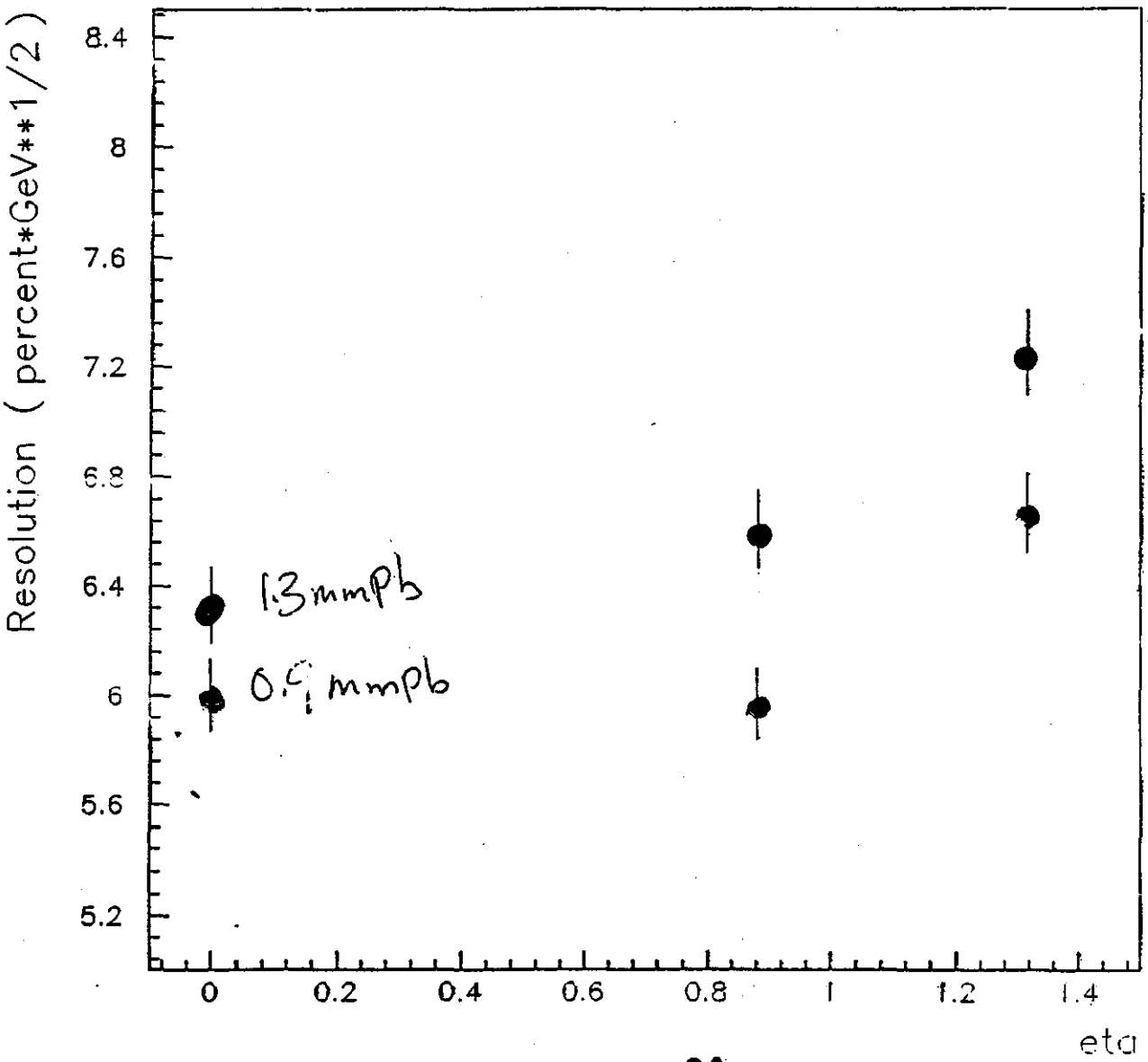

η

CALIBRATION SYSTEM

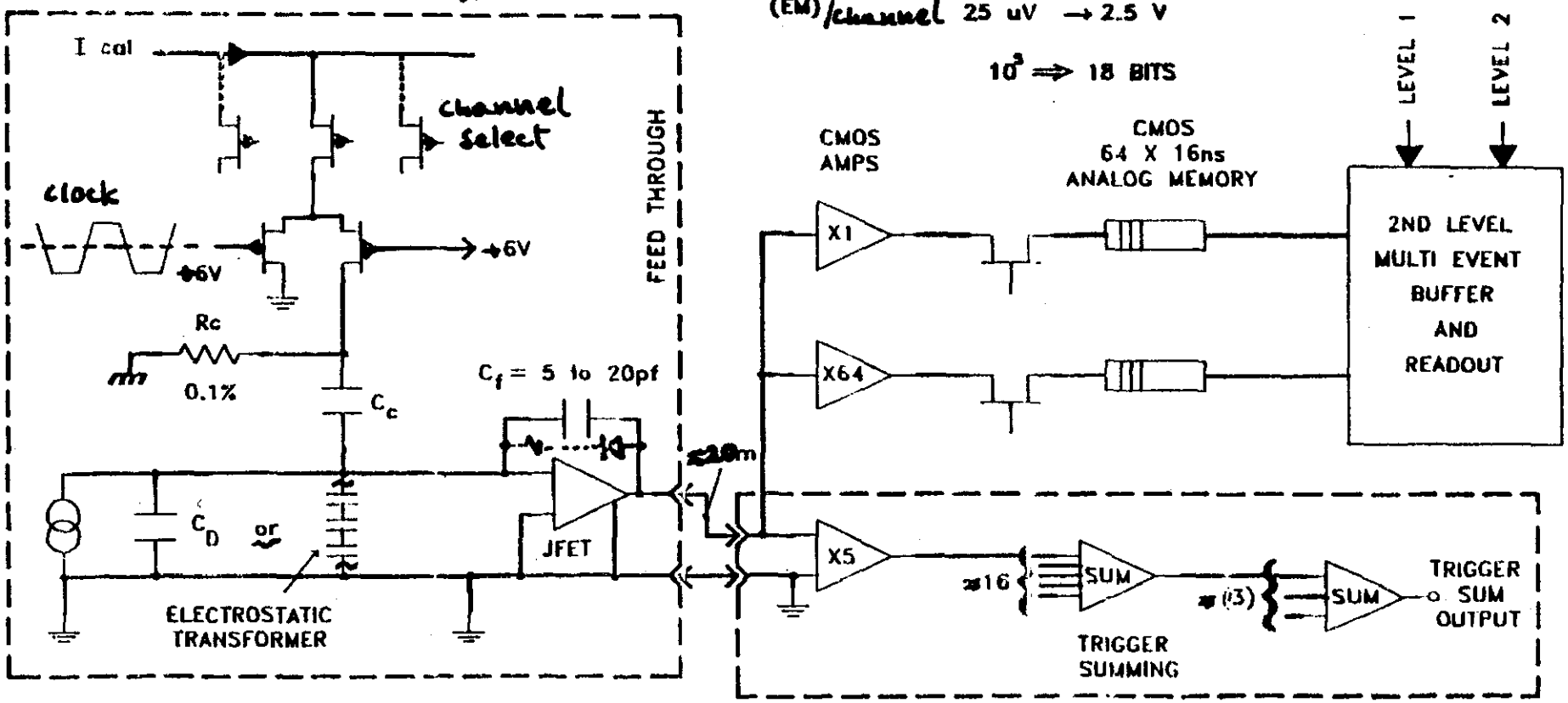

NOTES

DYNAMIC RANGE 25 MuV → 2.5 TeV
(EM)/channel 25 uV → 2.5 V

10^3 ⇒ 18 BITS

BNL-OMEGA JMH
SSC LA CAL SSCT002

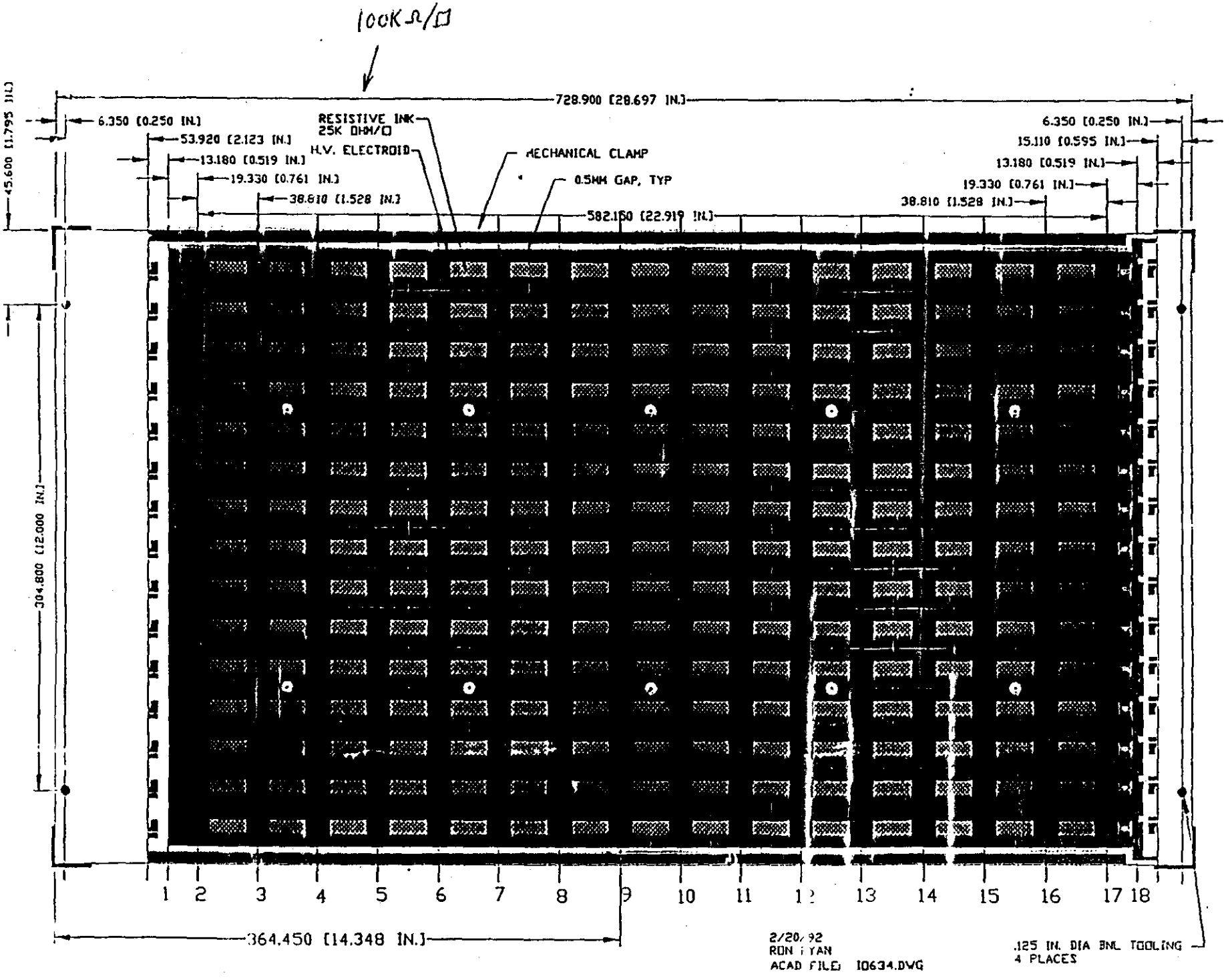
100KΩ/□
728.900 [28.697 IN.]
6.350 [0.250 IN.]
53.920 [2.123 IN.]
13.180 [0.519 IN.]
19.330 [0.761 IN.]
38.810 [1.528 IN.]
582.150 [22.919 IN.]
15.110 [0.595 IN.]
RESISTIVE INK
25K OHM/□
H.V. ELECTRODE
MECHANICAL CLAMP
0.5MM GAP, TYP
45.600 [1.795 IN.]
304.800 [12.000 IN.]
364.450 [14.348 IN.]
1 2 3 4 5 6 7 8 9 10 11 12 13 14 15 16 17 18
2/20/92
RON RYAN
ACAD FILE: 10634.DWG
.125 IN. DIA BNL TOOLING
4 PLACES

Chevron – improves position resolution in other coordinate

LAYER 2
FUGGIERO/GEM/L2
03/11/1992

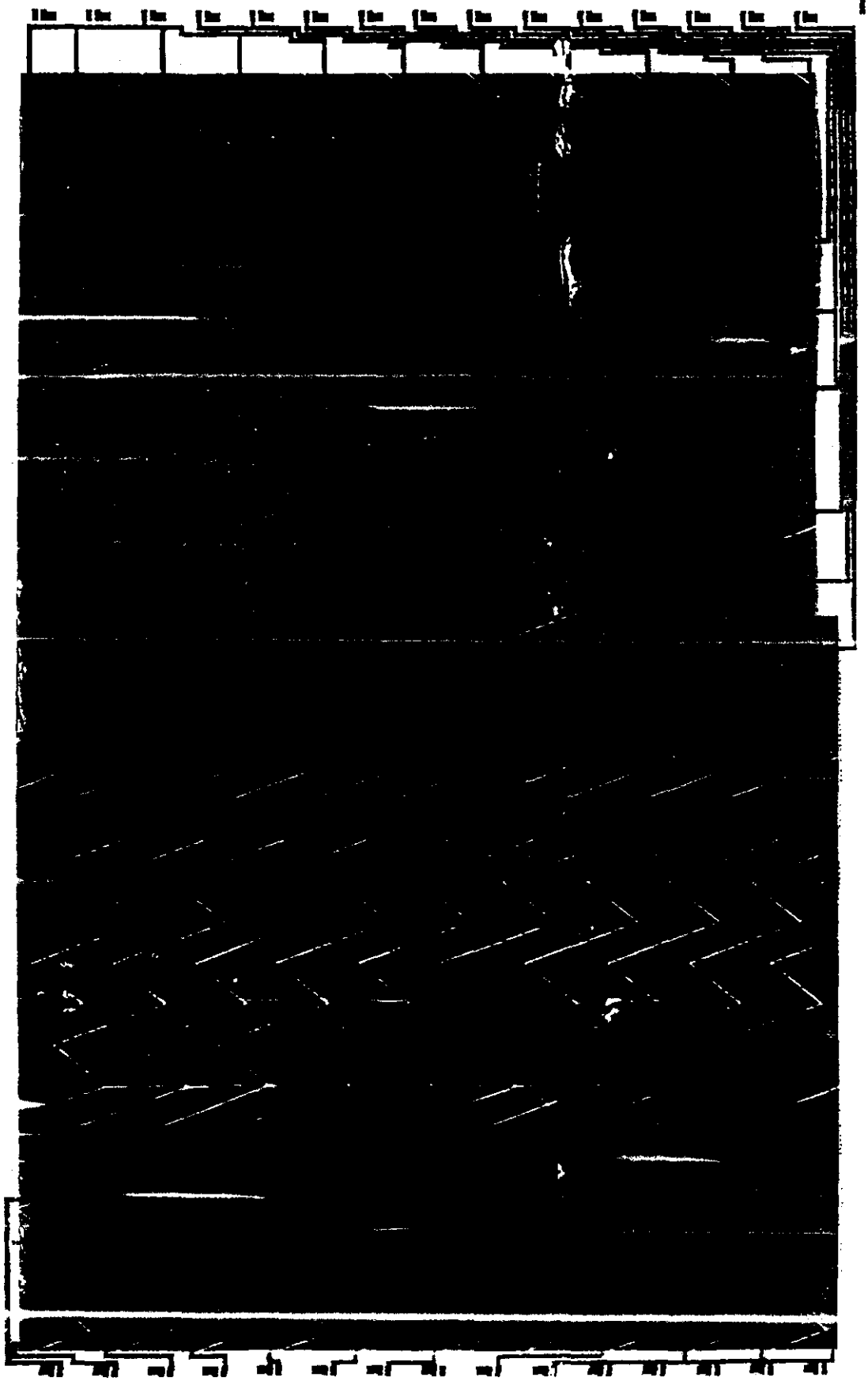

92/01/17 12.44

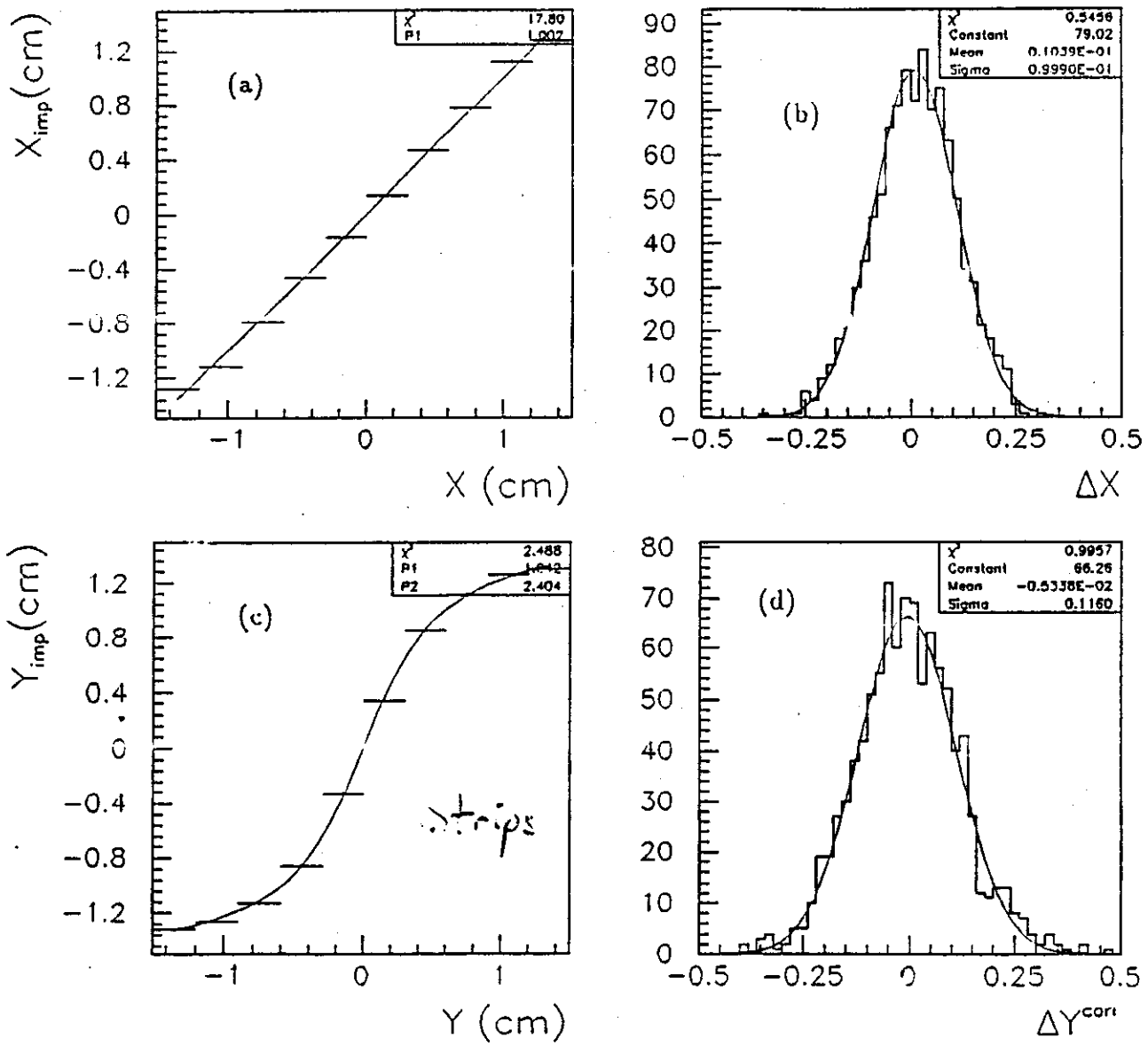

Figure 8

Cells	CERN RD3	2mm	1mm
3×3	2.82	2.35	2.11
5×5	2.65	2.07	1.96
Total	2.52	1.85	1.89

Table 2: Electron energy resolution at 10 GeV, GEANT simulation.

Cell size(mm)	σ_x(mm)	rms_y (mm)	σ_y^{corr}(mm)	$\sigma_y^{chevron}$(mm)
27	1.02	3.38	1.15	1.07
35		4.73	1.45	1.04

Table 3: Position resolution of accordion calorimeter, 10 GeV electrons, GEANT simulations.

1992. CEM Test Beam Cryostat at A-5

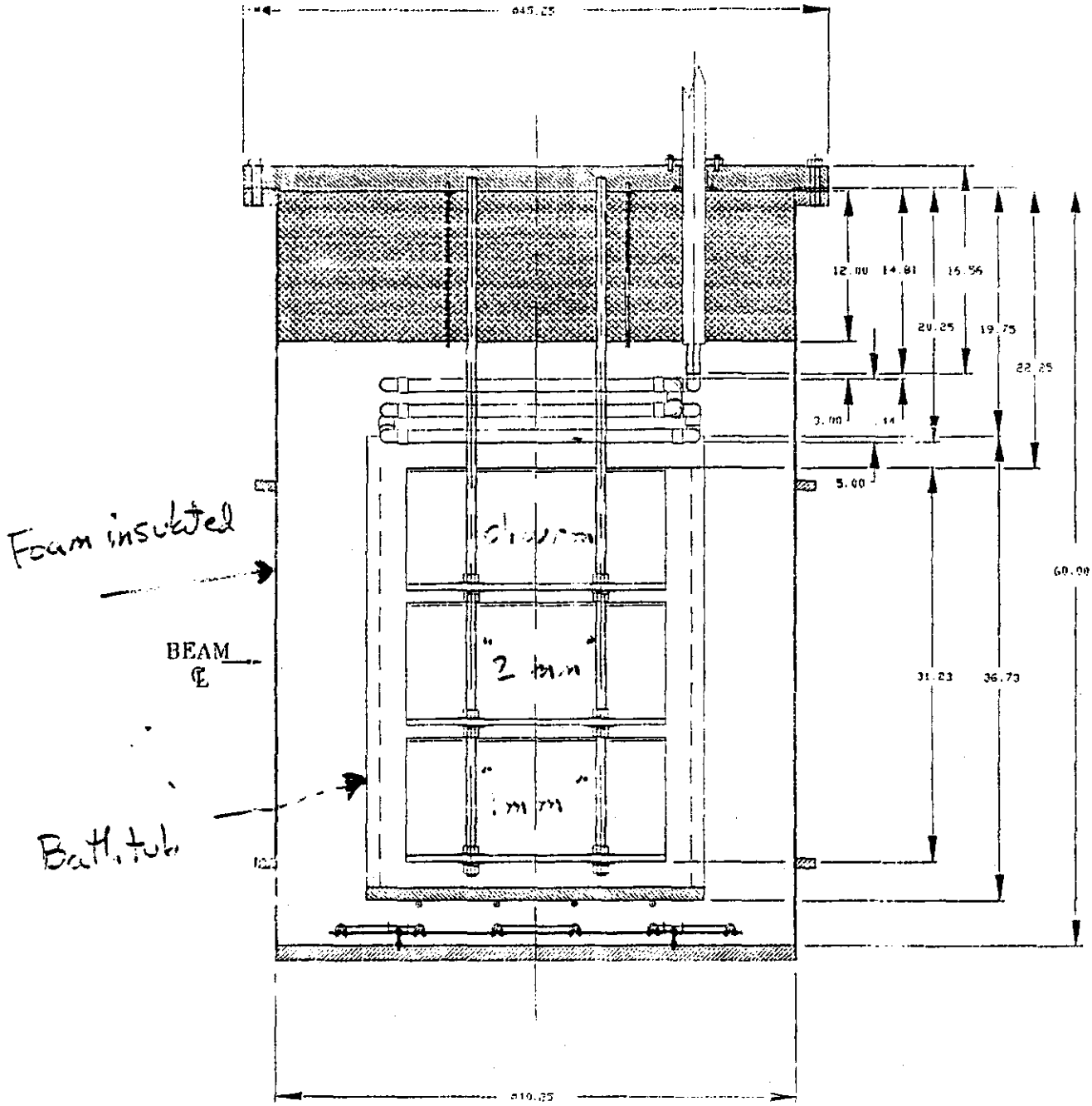

3/26/92

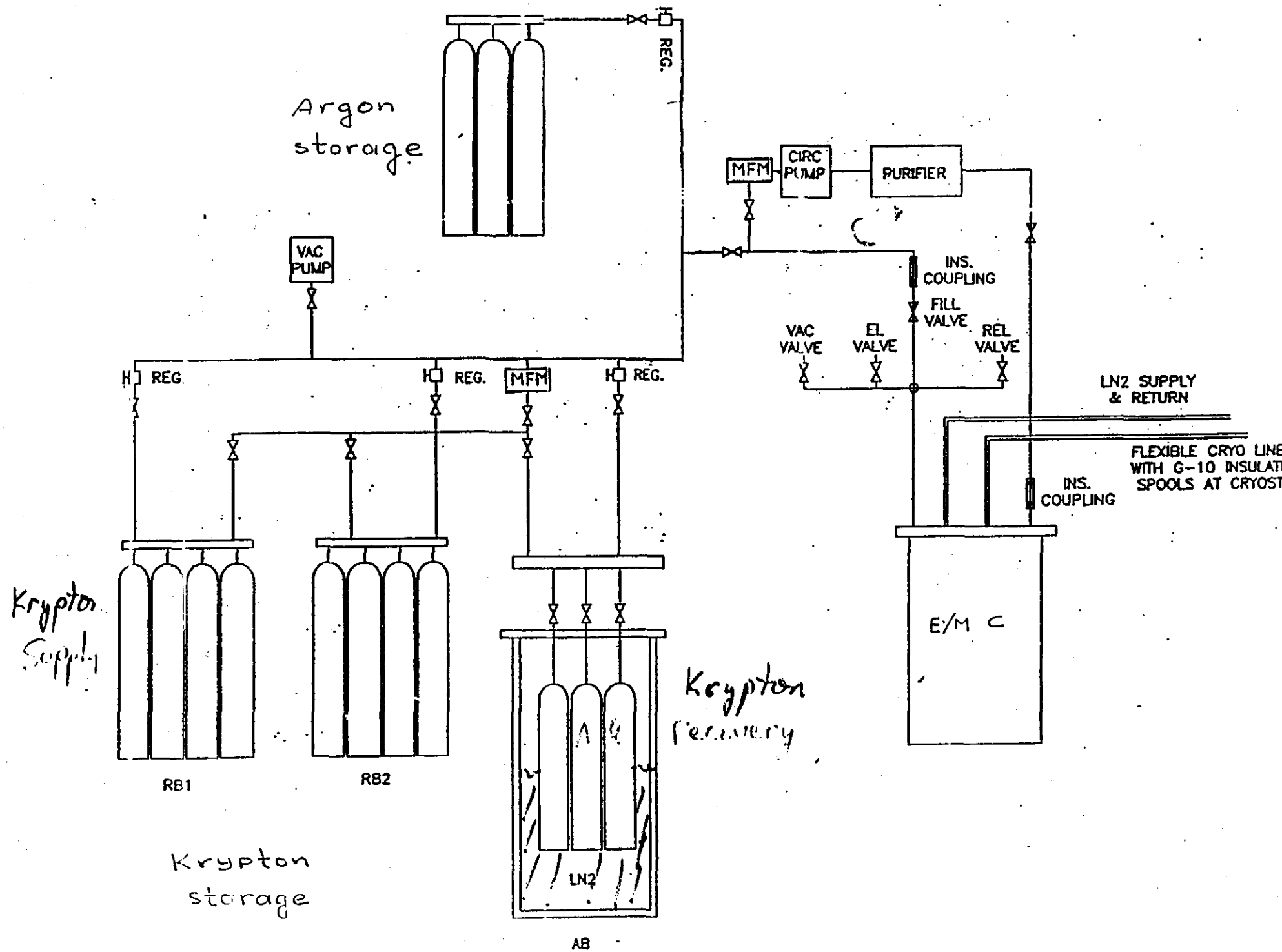
Argon storage
REG.
MFM
CIRC PUMP
PURIFIER
VAC PUMP
INS. COUPLING
FILL VALVE
VAC VALVE
EL VALVE
REL VALVE
REG.
REG.
MFM
REG.
LN2 SUPPLY & RETURN
FLEXIBLE CRYO LINE WITH G-10 INSULATI SPOOLS AT CRYOST
INS. COUPLING
E/M C
Krypton Supply
RB1
RB2
Krypton Recovery
LN2
Krypton storage
AB

gem

γeμ

Presentation by:

Lyle Mason

GEM

Liquid Argon Calorimeter

Engineering Design Review

22 April 1992

Lyle Mason
MARTIN MARIETTA

Agenda

- Requirements and Parameters Overview
- Interface Constraints
- Module Structure
  - EM
  - Hadronic
- Electronics Cooling
- Vessel Structure
- Vacuum and Cryogenic Systems
- Supports
- Assembly Scenario

GEM LAC Engineering Parameters

• LAC Dimensions	
— Barrel Inner Radius	750 mm
— Barrel Outer Radius	3600 mm
— Endcap Outer Radius	3600 mm
— Endcap	$0.7<\eta<3.4$
— Forward	$2.9<\eta<6.0$
• LAC Extent (Beam Axis)	
— Barrel Half-Length	2380 mm
— Endcap Start	2410 mm
— Endcap End	5500 mm
— Forward Start	5090 mm
— Forward End	6570 mm
• Barrel/Endcap Gap	20 mm
• Masses	
— Barrel	783 MT
— Endcap/Forward (ea.)	520 MT

GEM LAC Design Requirements

- EM Cell Structure

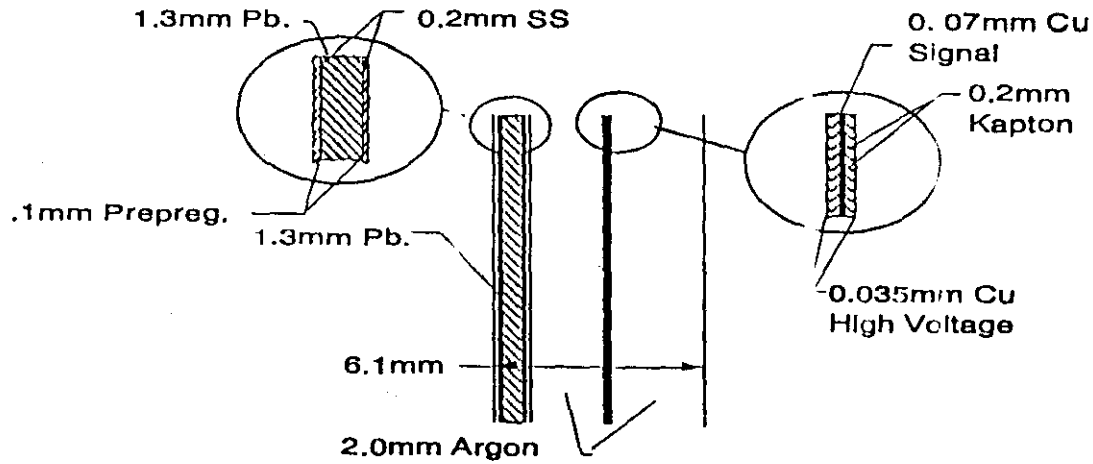

- Hadronic Cell Structure

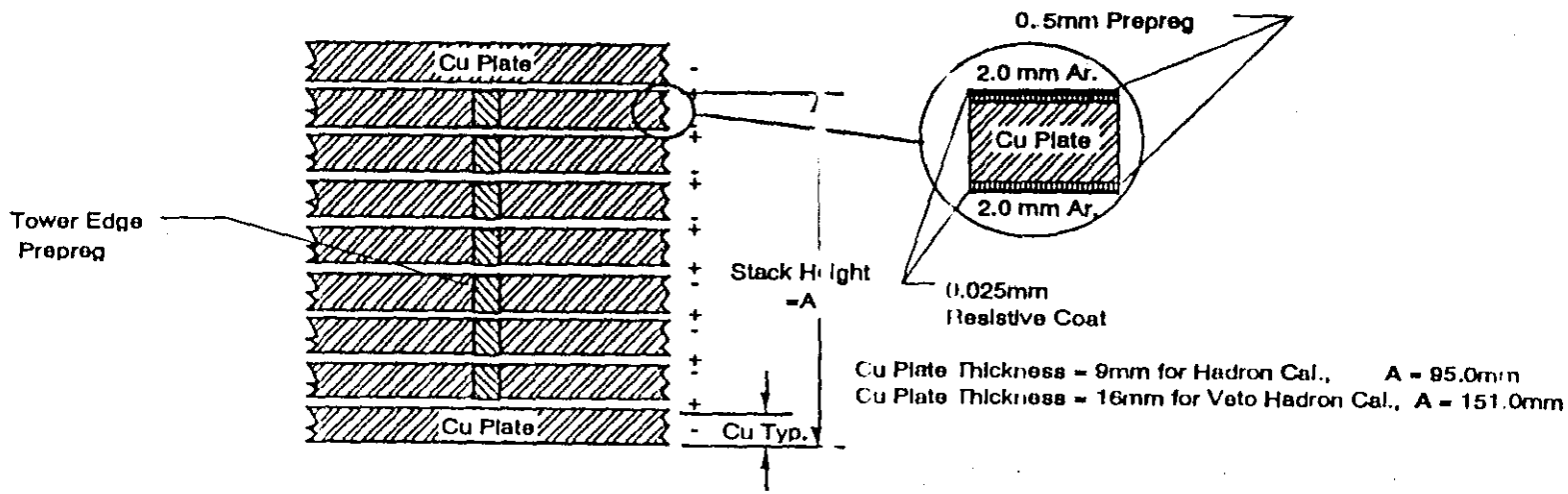

GEM LAC Performance Requirements

• EM Resolution	$7.5\%/\sqrt{E} \oplus 0.5\%$
• Hadronic Resolution	$60\%/\sqrt{E} \oplus 2\%$
• Position Resolution	$5\ \mathrm{mm}/\sqrt{E}$
• Time Resolution	$<$ 1 Bunch Crossing

GEM LAC Design Requirements

• Total LAC Depth		
— $\eta=0$	10 Absorption Lengths	
— $\eta=3$	12 Absorption Lengths	
• Pseudorapidity Coverage	$-6.0 \leq \eta \leq 6.0$	
— Barrel/Endcap	$-3.0 \leq \eta \leq 3.0$	
• Azimuthal Coverage	$0 \leq \phi \leq 2\pi$	
• Segmentation	Transverse	Depth
— EM	$\Delta\eta x \Delta\phi = .032x.032$	2
— Hadronic	$\Delta\eta x \Delta\phi = .08x.08$	3 (Barrel) 2 (Endcap)
• Absorber		
— EM	Lead	
— Hadronic	Copper	
• EM Depth	25 Radiation Lengths	

gem

γeμ

Presentation by:

Lyle Mason

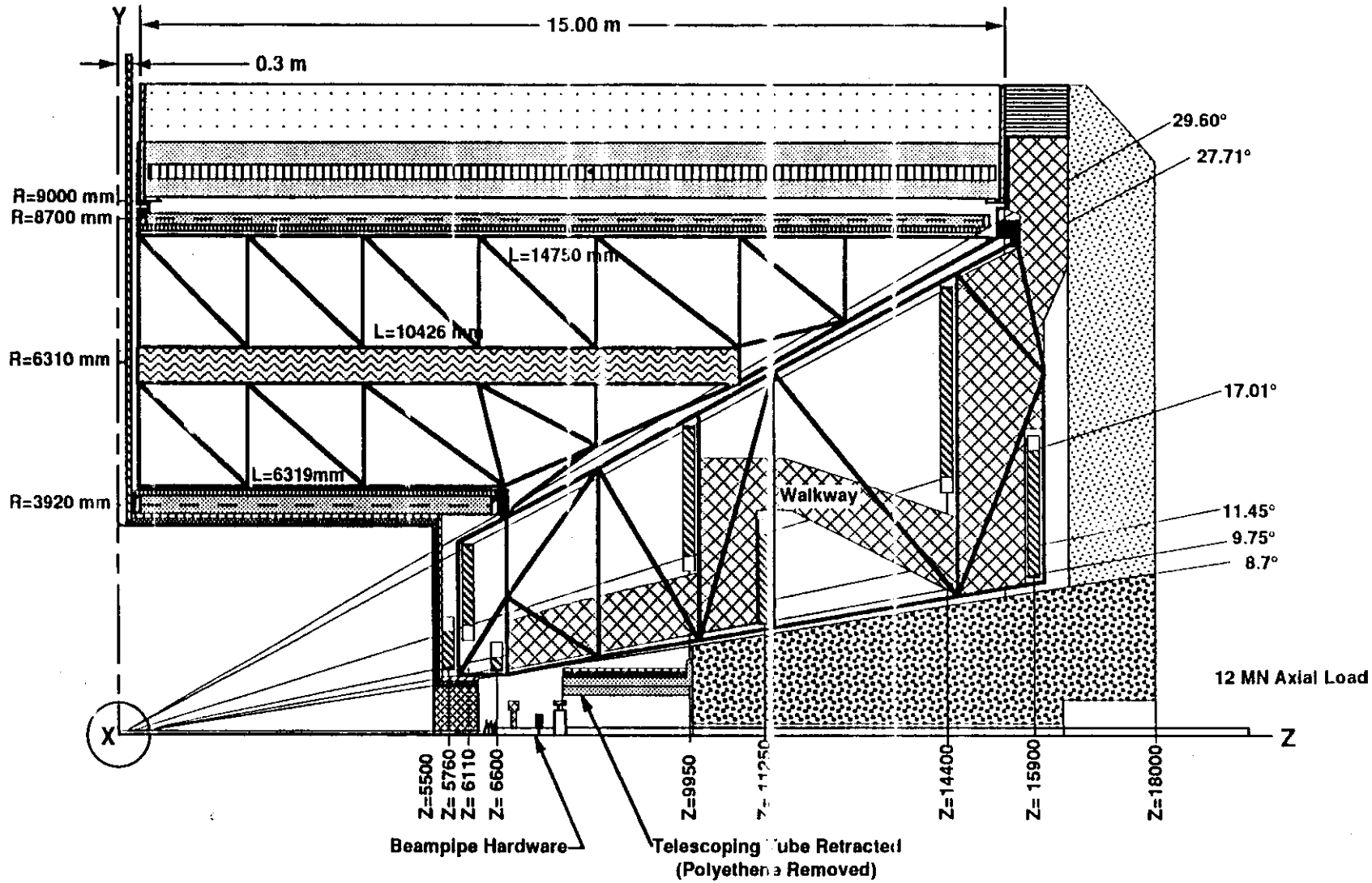

GEM MUON SYSTEM

ACCESS TO BEAMPIPE

F. Nimblett
Draper Lab.
GEM920319

GEM Liquid Argon Calorimeter

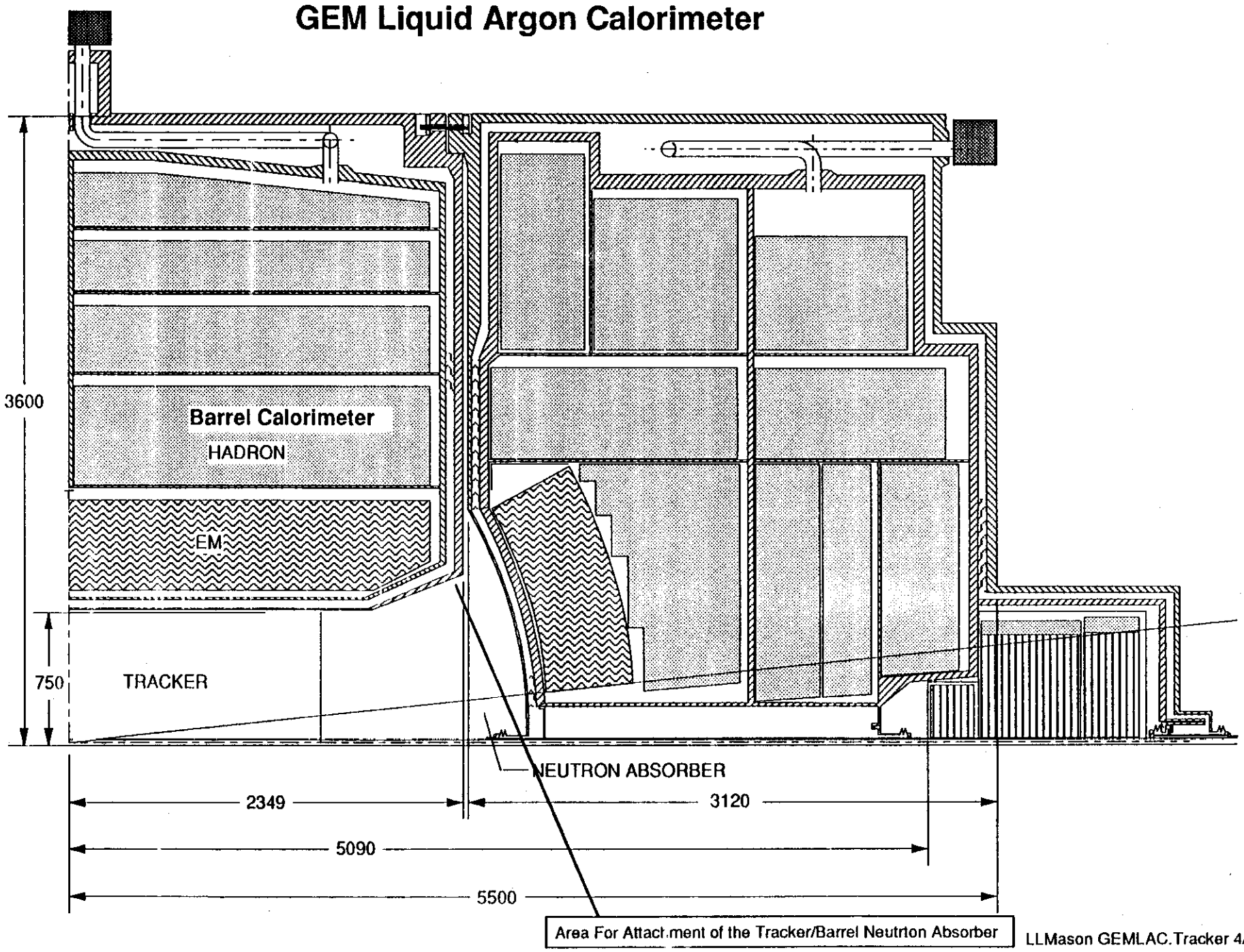

LLMason GEMLAC.Tracker 4/16/92

GEM Liquid Argon Calorimeter

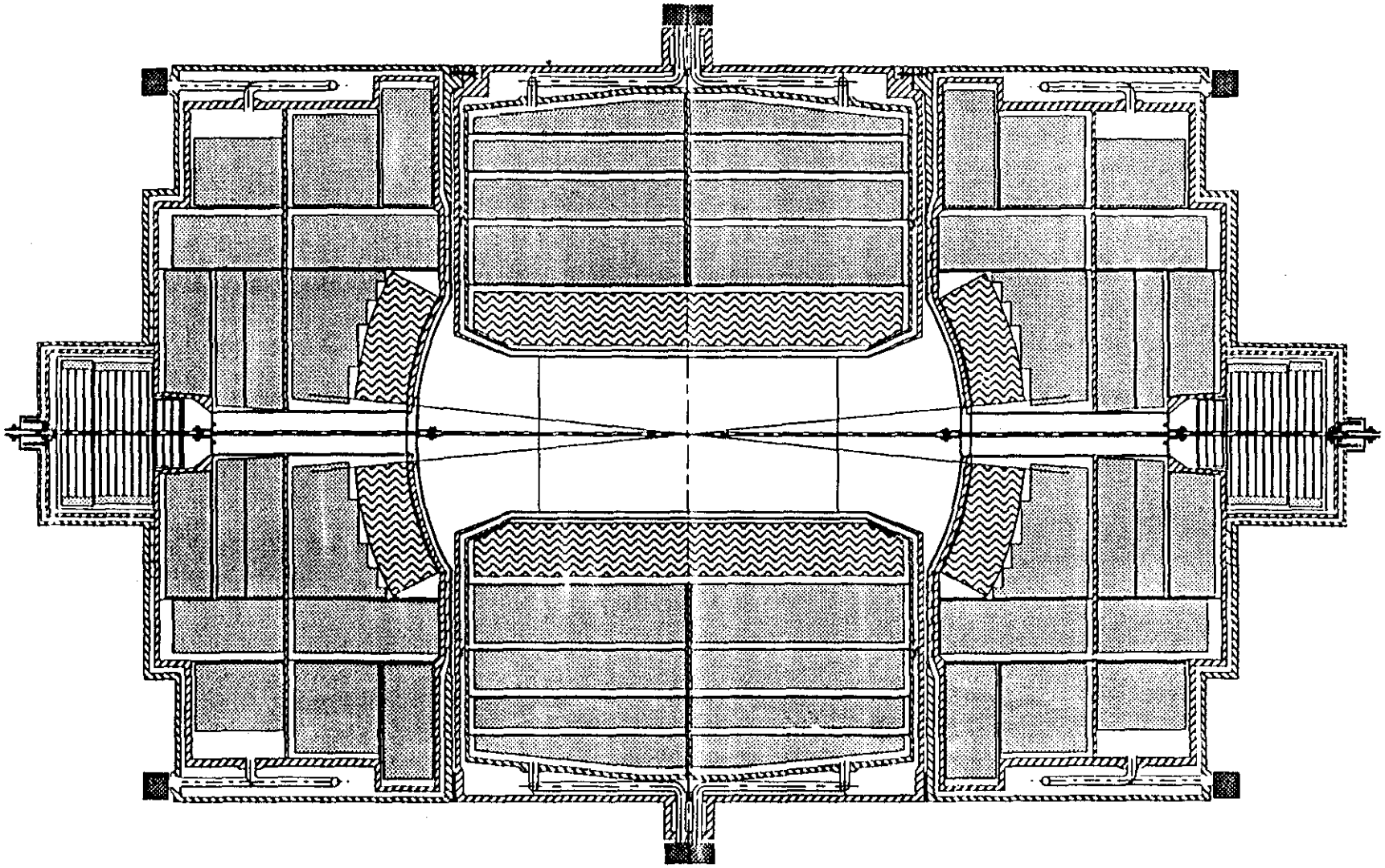

LLMason GEMLAC.Calorimeter 4/18/92

GEM Liquid Argon Calorimeter

1/4 Section "Off Vertical"
Copper Hadron Absorber

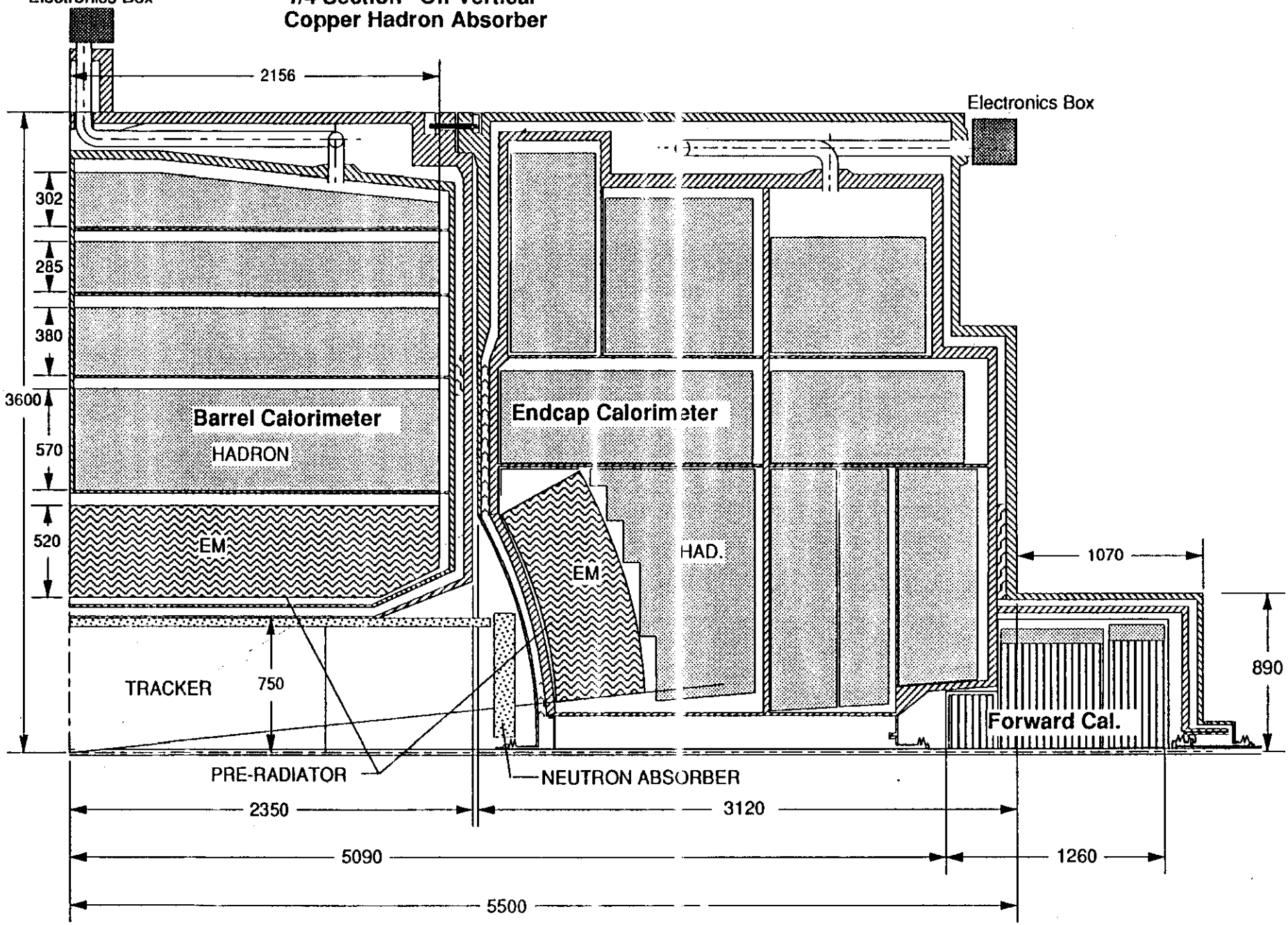

LLMason GEMLAC.4/21/92

Cell Plate Orientation for Hadronic Modules Only

Z Plates are Parallel to the "Z" Axis, Vertical Plates are Perpendicular to the "Z" Axis

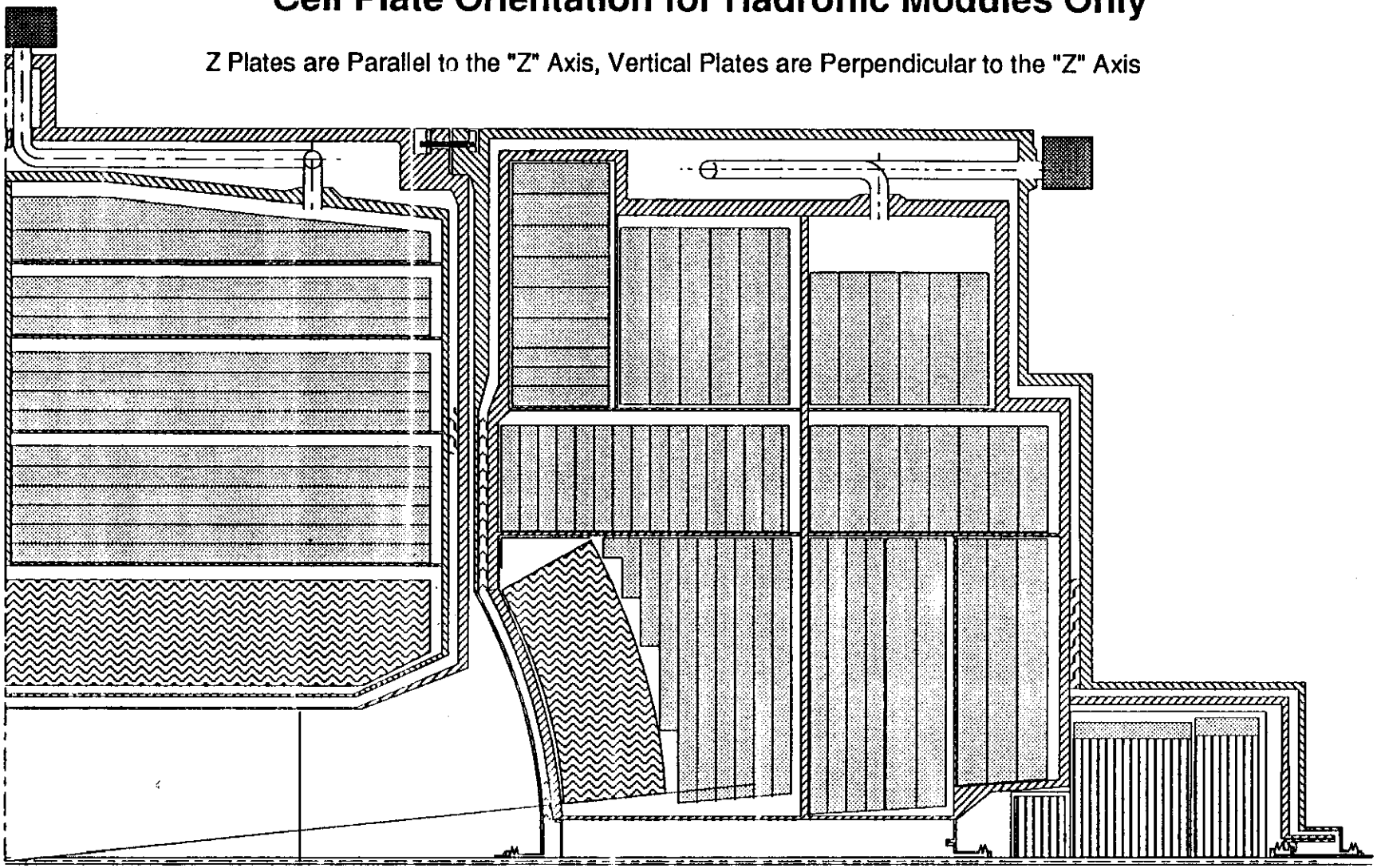

Segmentation for Eta = 0.032 x 0.032, (200 in 360 degrees of phi)

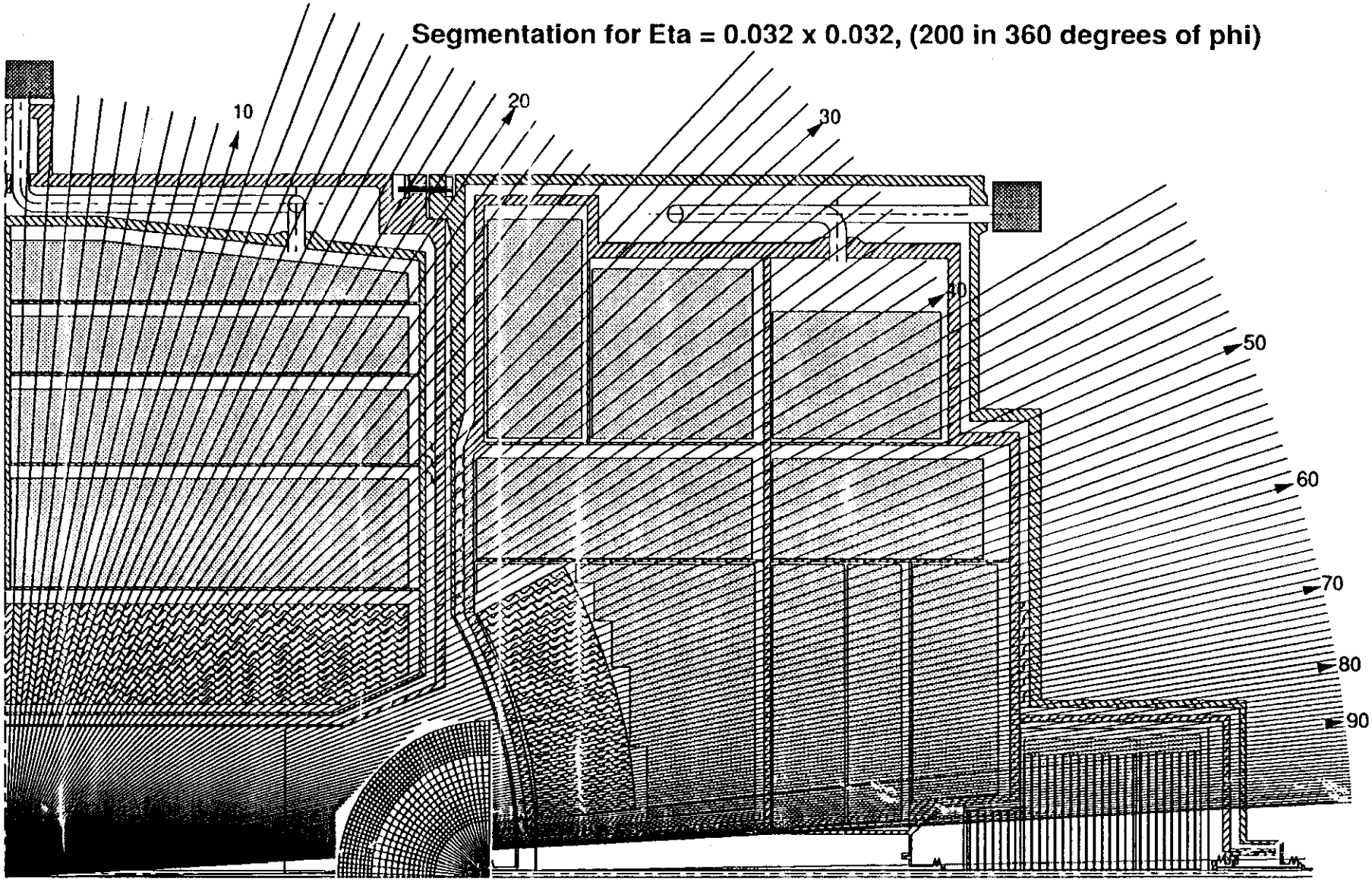

LLMason GEMLAC.EMRAY4/21/92

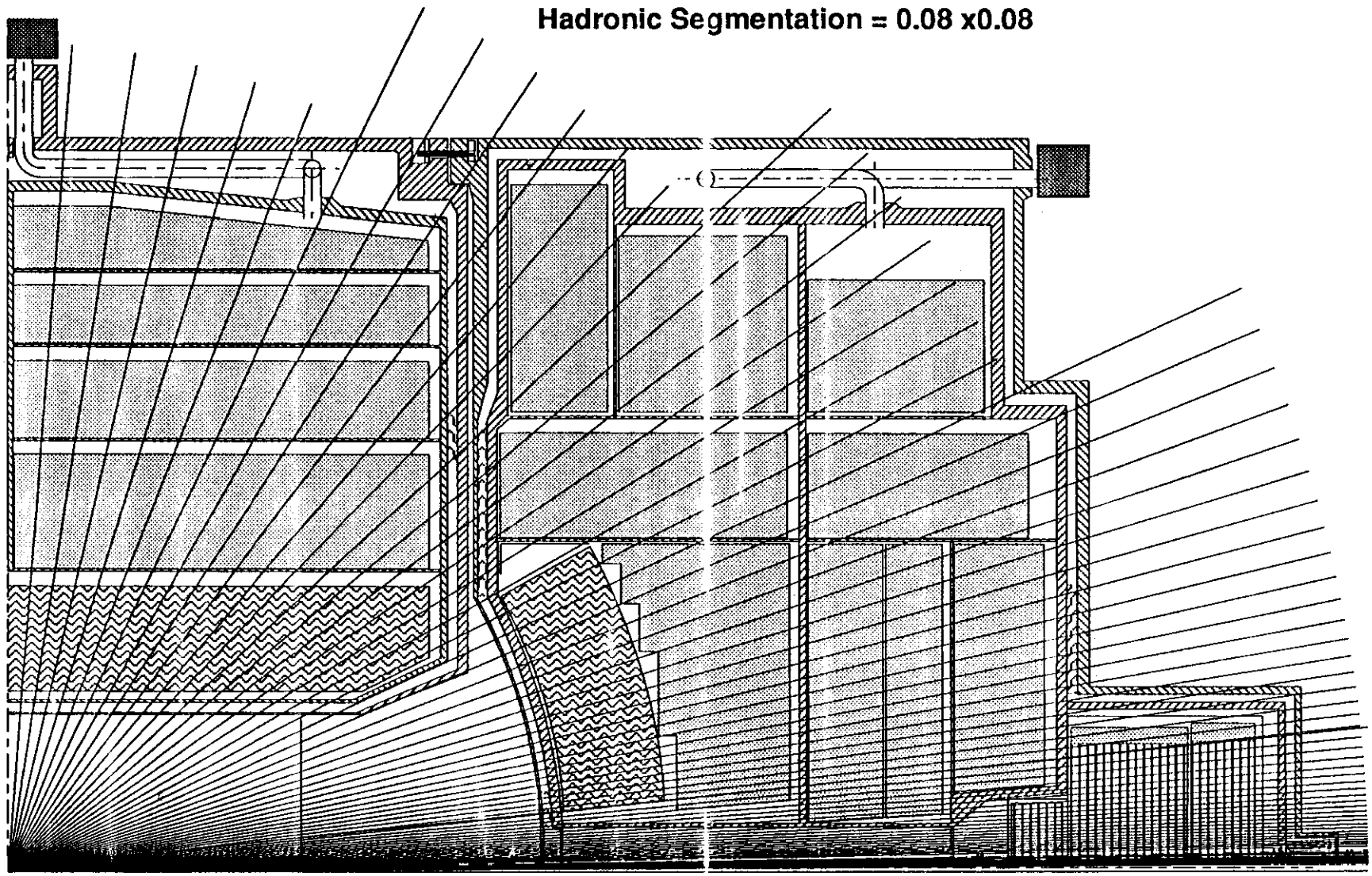

LLMason GEMLAC.RAY 4/16/92

GEM Liquid Argon Cells/Tower Configurations

(Not All Cells Shown as Blocks)

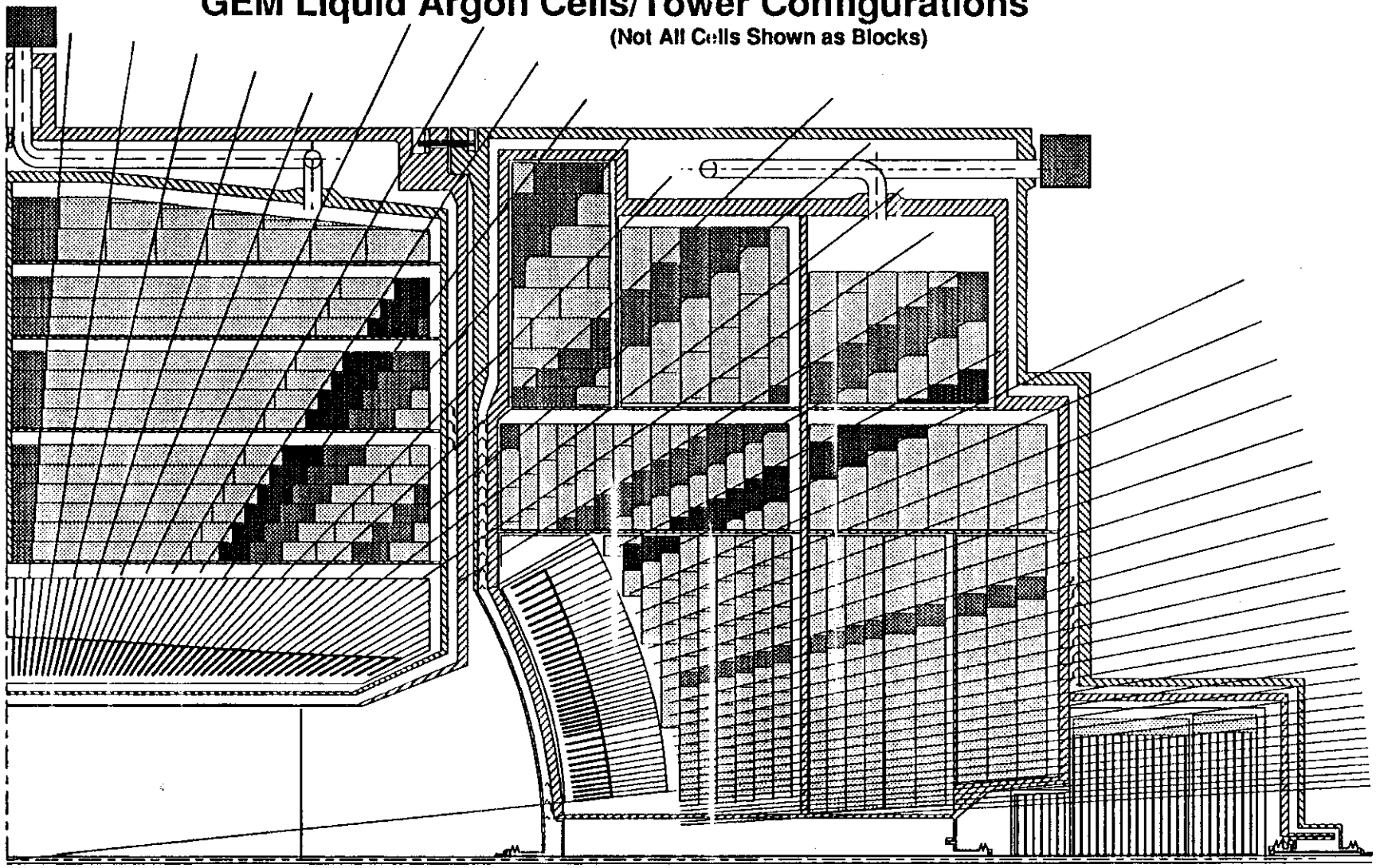

Hadronic Segmentation = 0.08 x 0.08

EM Segmentation = 0.032 x 0.032

LLMason GEMLAC.RAY 4/16/92

	Segmentation	phi	Eta Start	Eta End	Delta eta	towers In eta	Towers	Depth segm.	Channels Modules	Channels for cal.	Channels Had/Bri
Barrel EM	.032 by .032	200	0.00	1.28	1.28	40.00	8000	2	16000	32000	
Bri/Edcp Trans		200	1.28	1.44	0.16	5.00	1000	2	2000	4000	
							Total EM Barrel =			36000	
Endcap EM	.032 by .032	200	1.38	2.24	0.86	27.00	5400	2	10800	10800	
Mod 6	.064 by .064	100	2.20	3.00	0.80	12.50	1250	2	2500	2500	
							Total EM/Endcap =			13300	
								Total EM =		62600	
Fine Hadron	.08 by .08	80	0.00	1.20	1.20	15.00	1200	1	1200		2400
Barrel 2											
Fine Hadron	.08 by .08	80	0.00	0.88	0.88	11.00	880	1	880		1760
Barrel 3											
Fine Hadron	.08 by .08	80	0.00	0.80	0.80	10.00	800	1	800		1600
Barrel 4											
Coarse Hadron	.08 by .08	80	0.00	0.72	0.72	9.00	720	1	720		1440
Barrel 5								Total Barrel Had=			7200
Fine Hadron	.08 by .08	80	0.80	1.12	0.32	4.00	320	1	320		640
Coarse Had		80	0.72	0.88	0.16	2.00	160	1	160		320
Endcap 12											
Fine Hadron	.08 by .08	80	0.88	1.36	0.48	6.00	480	1	480		960
Endcap 13											
Coarse Had	.08 by .08	80	1.12	1.44	0.32	4.00	320	1	320		640
Endcap 14											
Fine Hadron	.08 by .08	80	0.96	1.60	0.64	8.00	640	1	640		1280
Endcap 11											
Fine Hadron	.08 by .08	80	1.36	1.84	0.48	6.00	480	1	480		960
Coarse Had	.08 by .08	80	1.52	1.84	0.32	4.00	320	1	320		640
Endcap 10											
Fine Hadron	.08 by .08	80	1.44	3.20	1.76	22.00	1760	1	1760		3520
Endcap 7											
Fine Hadron	.08 by .08	80	1.68	3.60	1.92	24.00	1920	1	1920		3840
Endcap 8											
Fine Hadron	.08 by .08	80	1.76	3.60	1.84	23.00	1840	1	1840		3680
Endcap 8A											
Coarse	.08 by .08	80	1.84	3.28	1.44	18.00	1440	1	1440		2880
Endcap 9						Total Had/endcap =			9680	Both E/C	19360
			Barrel		Each Endcap			Total Had Both Endcaps =			19360
	EM Channels		36000		13300						
	Hadron		7200		9680		TOTAL CHANNELS =			89160	
		Total	43200	Total	22980						
										LLMason 4/4/92	

Barrel Accordion sensing and absorbing plates only

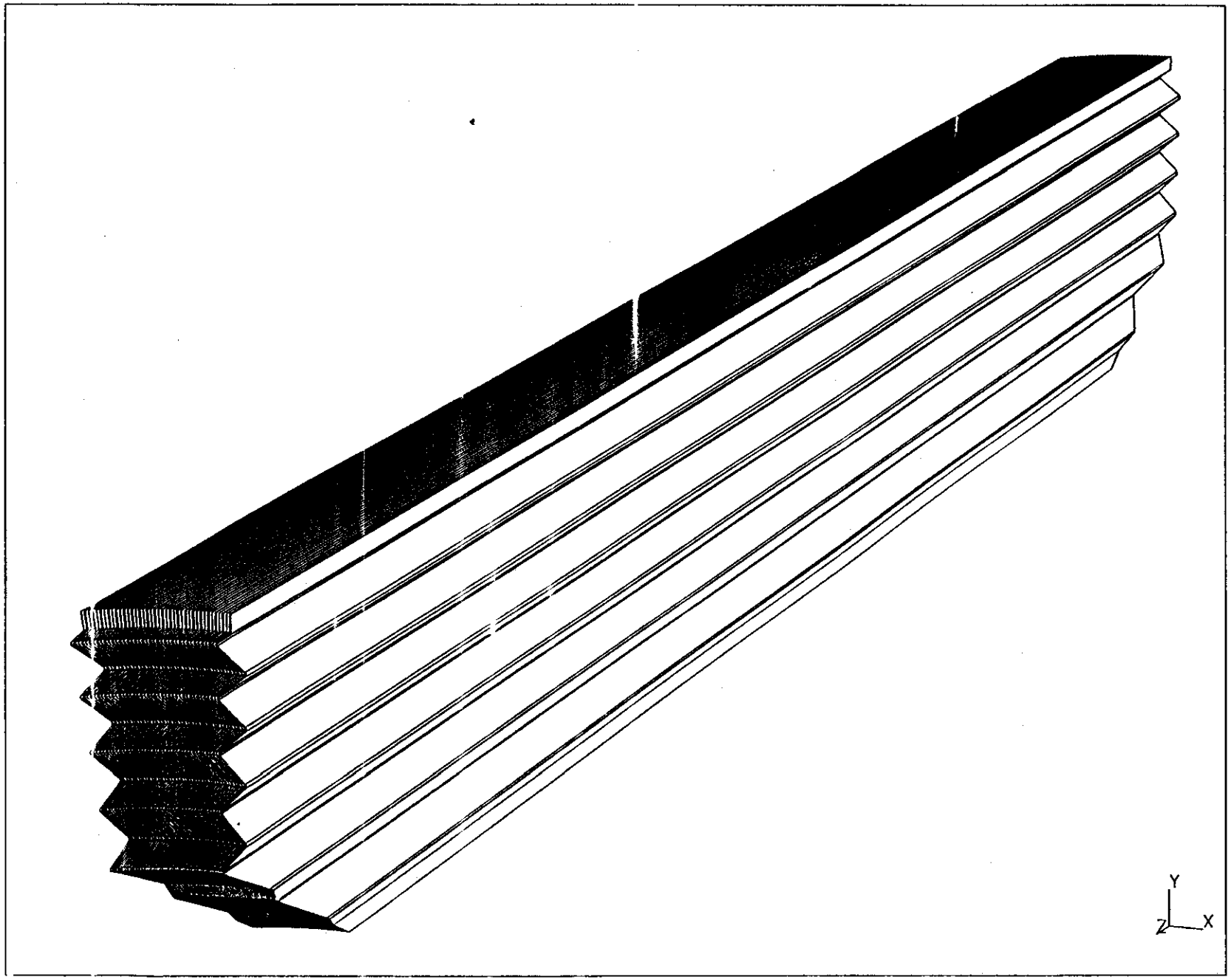

Barrel Accordion Electromagnetic Module

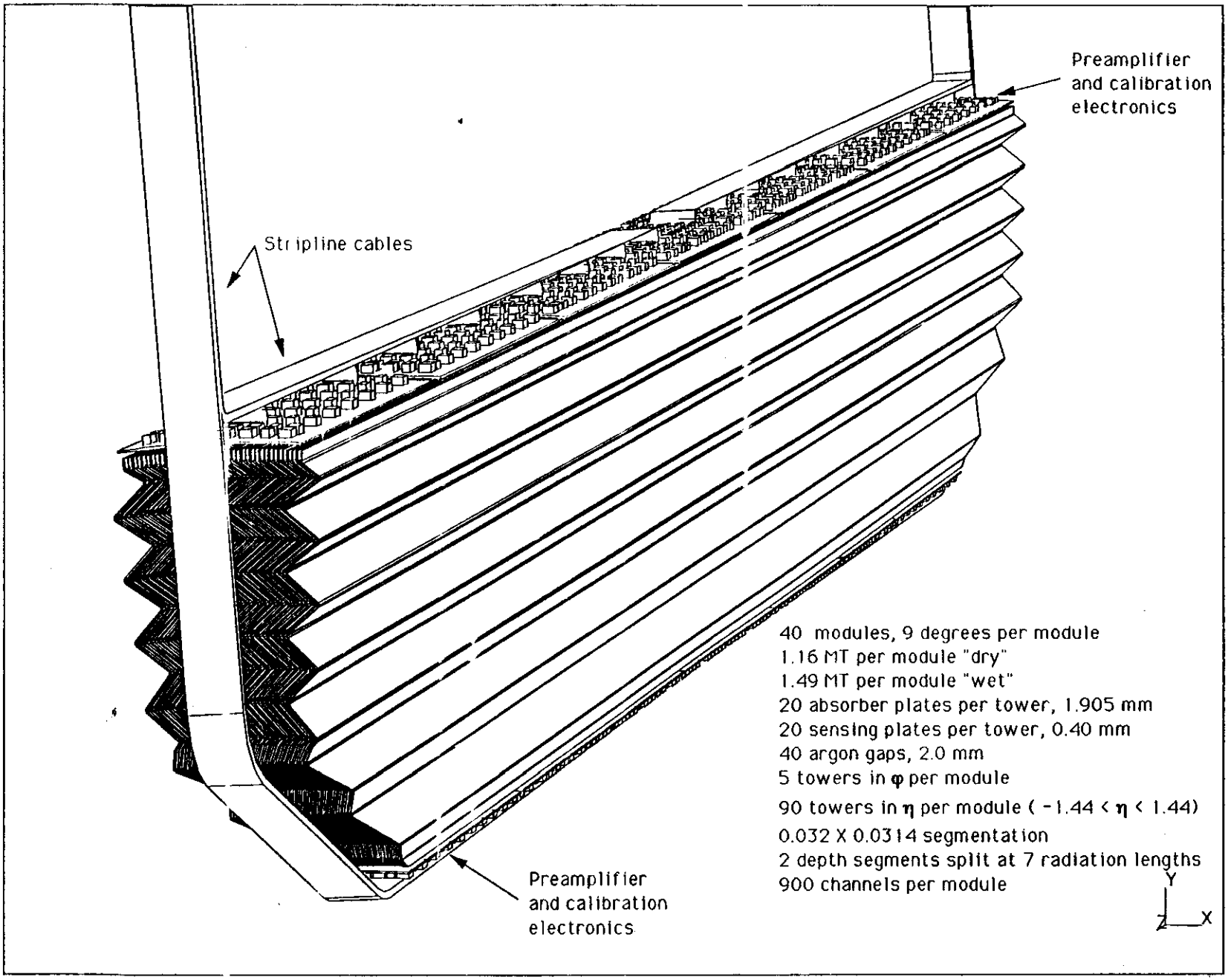

Closeup of the Barrel Accordion showing Electronics, Stripline, and Plates

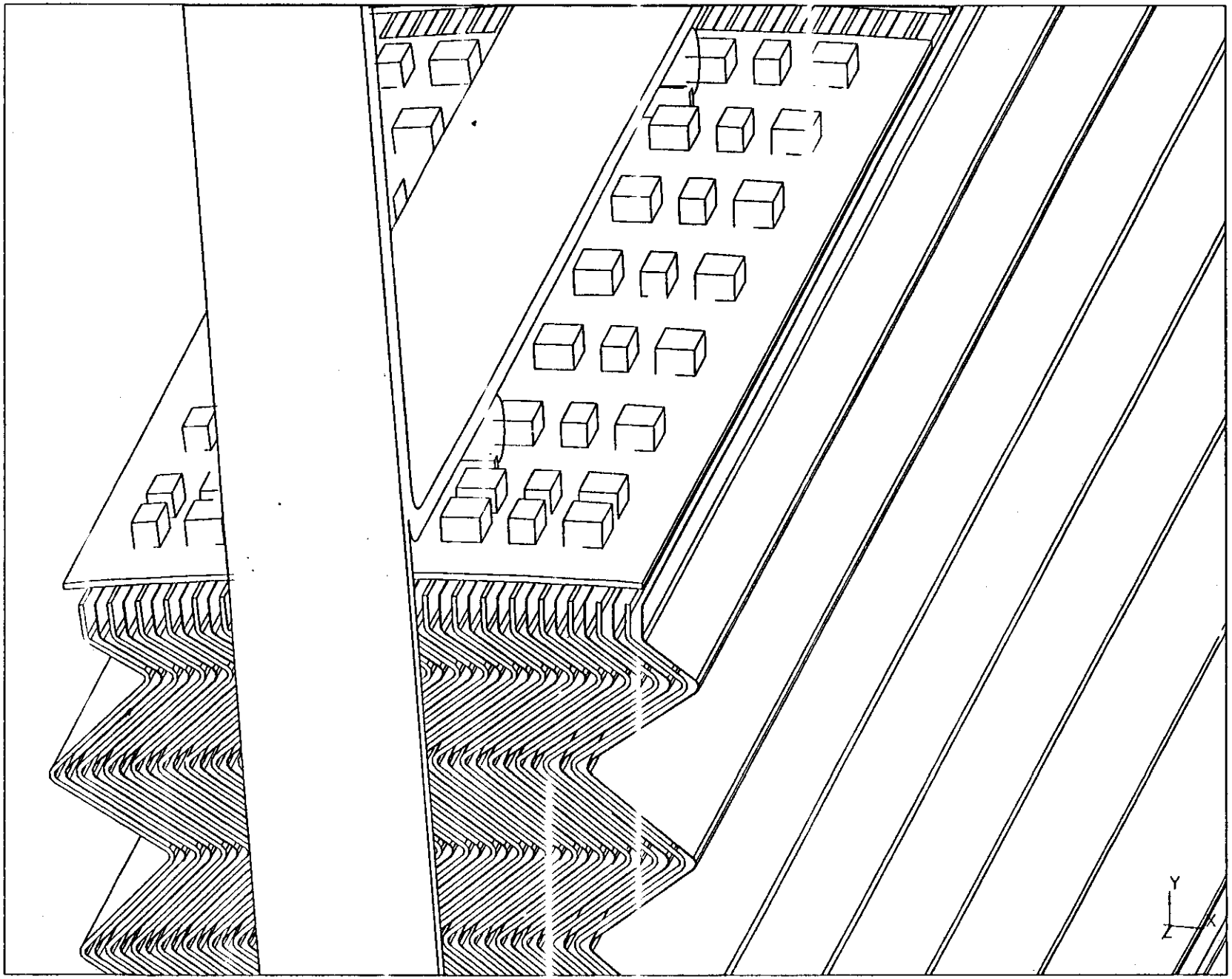

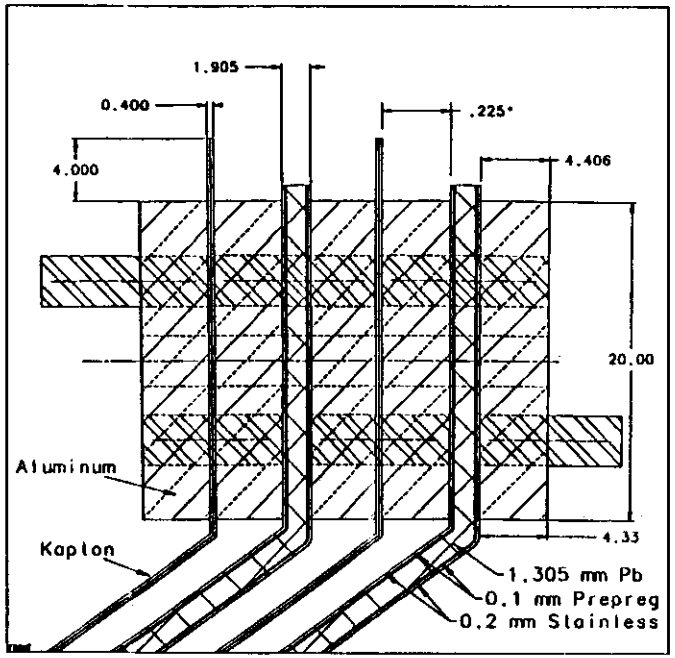
1.905
0.400
.225"
4.000
4.406
20.00
Aluminum
Kapton
4.33
1.305 mm Pb
0.1 mm Prepreg
0.2 mm Stainless

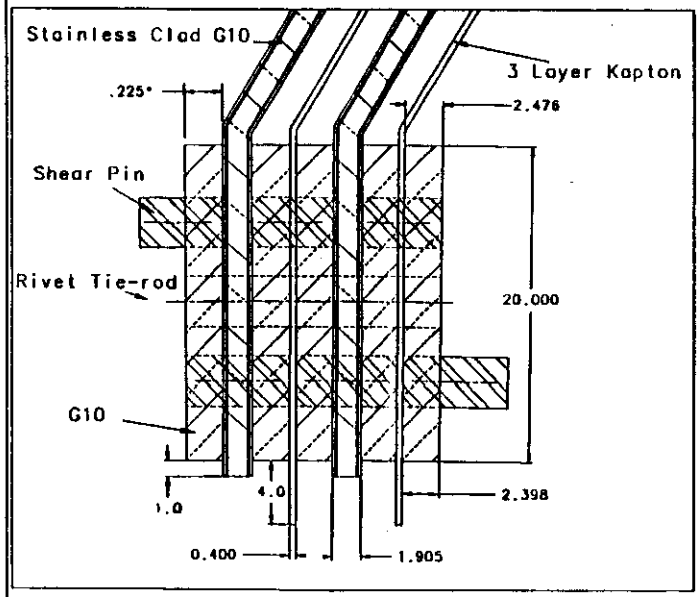
Stainless Clad G10
3 Layer Kapton
.225"
2.476
Shear Pin
Rivet Tie-rod
20.000
G10
1.0
4.0
2.398
0.400
1.905

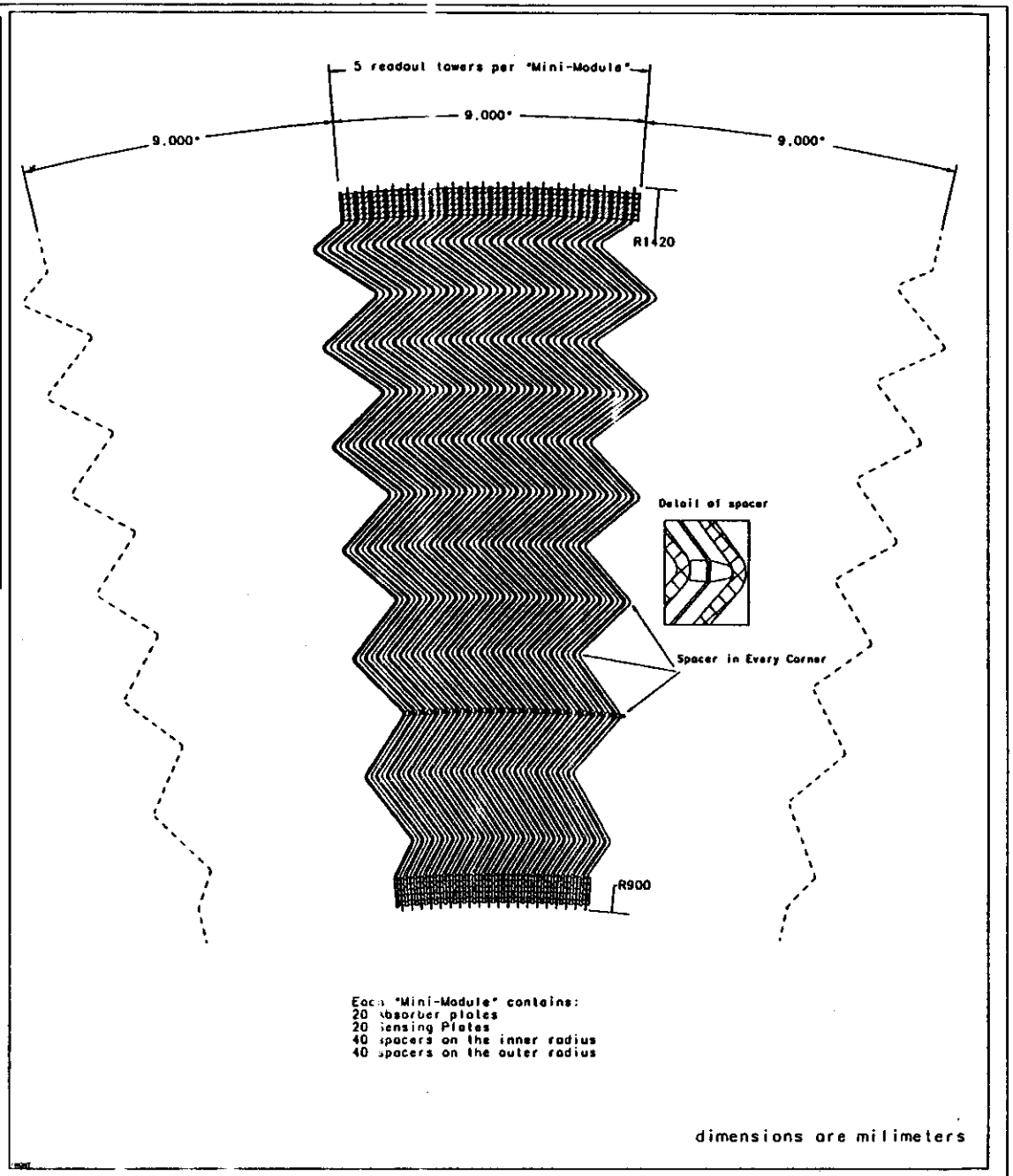
5 readout towers per "Mini-Module"
9.000"
9.000"
9.000"
R1420
Detail of spacer
Spacer in Every Corner
R900
Each "Mini-Module" contains:
20 Absorber plates
20 Sensing Plates
40 spacers on the inner radius
40 spacers on the outer radius
dimensions are milimeters

Layers of the Accordion Absorber plate

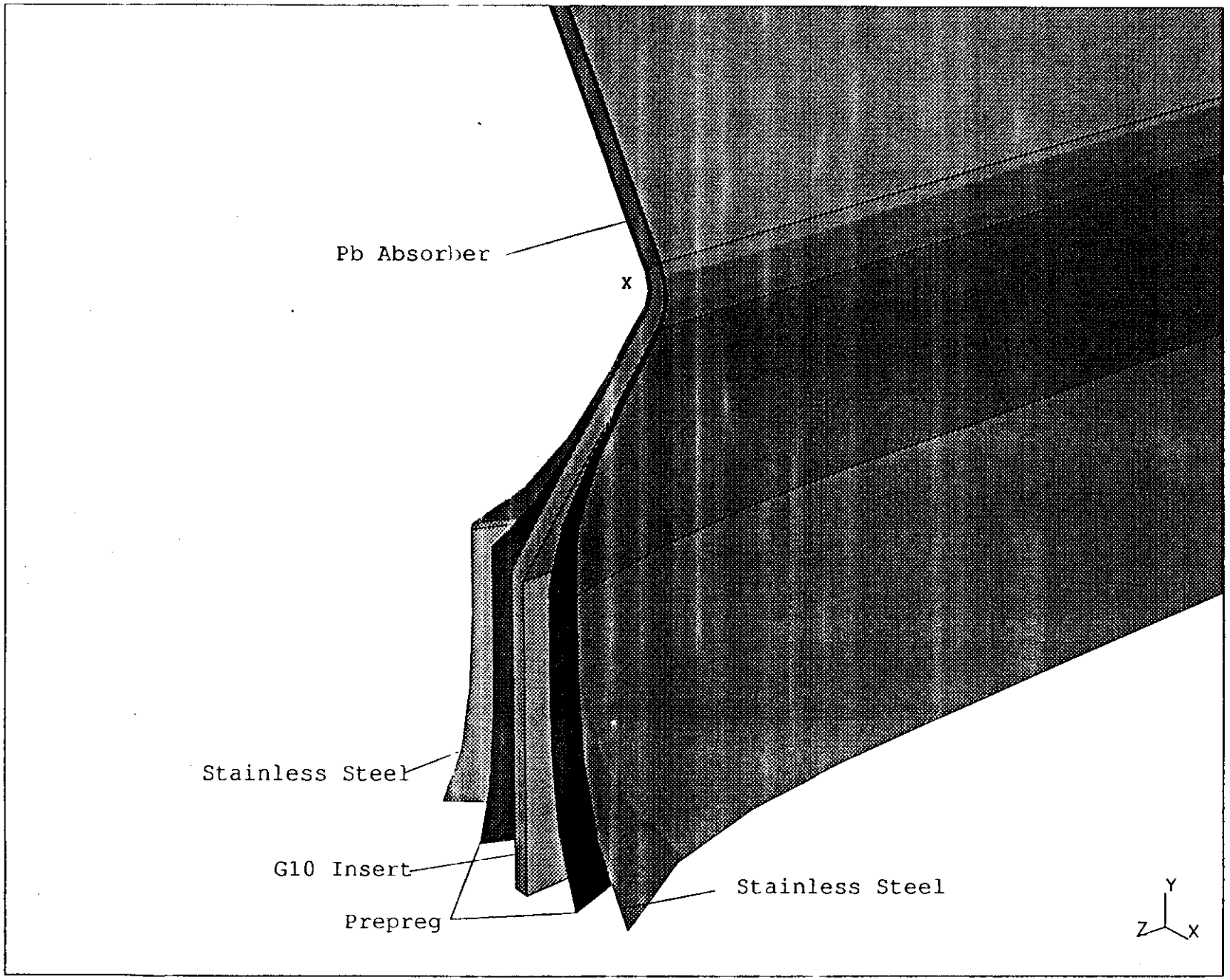

Barrel Accordion Afte Bending

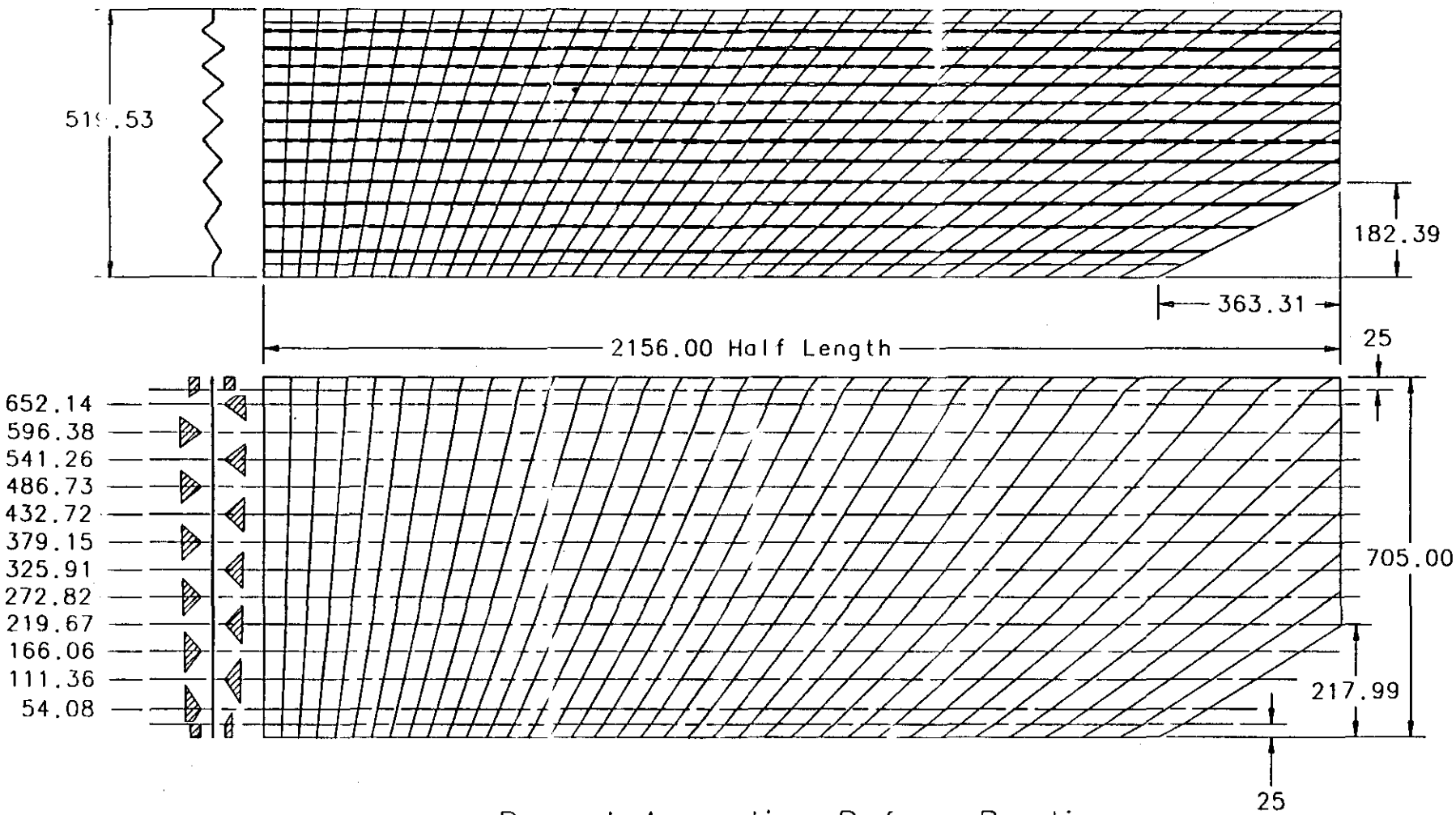

Barrel Accordion Before Bending

Typical but obsolete
200 absorber and 200 sensing plates
with .04 X .04 Segmentation

Material	Density	nteraction Lengt	Radiation Lengt	dE/dx			
	(g/cm3)	(g/cm2)	(g/cm2)	MeV cm2/gm			
C	2.265	86.3	42.7	1.78			
Cu	8.96	134.9	12.86	1.44			
Fe	7.87	131.9	13.84	1.48			
G10	1.7	90.2	33	1.87			
Kapton	1.11	76.74	36.09	1.85			
LAr	1.4	117.2	19.55	1.51			
Mylar	1.39	85.7	39.95	1.86			
Pb	11.35	194	6.37	1.13			
PolyScin	1.032	82	43.8	1.95			
SS	7.92	131.9	13.84	1.48			
Ta	16.6	182.0719569	6.82	1.16			
U	18.95	199	6	1.09			
W	19.3	185	6.76	1.16			
Material	Sensor	Cell Repeat	depth mm	depth g/cm2	Interaction length	Radiation Length	E deposition
SS		2	0.2	0.317	2.4018E-03	2.29E-02	0.4689
Pb		1	1.6	1.816	9.3608E-03	2.85E-01	2.0521
G10		1	0.125	0.021	2.3559E-04	6.44E-04	0.0397
LAr	S	2	2	0.560	4.7782E-03	2.86E-02	0.8456
C		2	0.025	0.011	1.3123E-04	2.65E-04	0.0202
Mylar		2	0.063	0.018	2.04[illegible]6E-04	4.38E-04	0.0326
Totals			6.301	2.742889	[illegible].71[illegible]2E-02	3.3797E-01	3.4590
	Depth	Density		Effective	Eff[illegible]ctive		
	(cm)	(g/cm3)		cm/Interaction length	cm/Radia[illegible]on length	Sampling Fraction	
	0.6301	**4.353**		**36.82**	1[illegible]86	**24.45%**	

Study of Accordion/Sensing Plate Layout
4 Cells/Geometric Tower

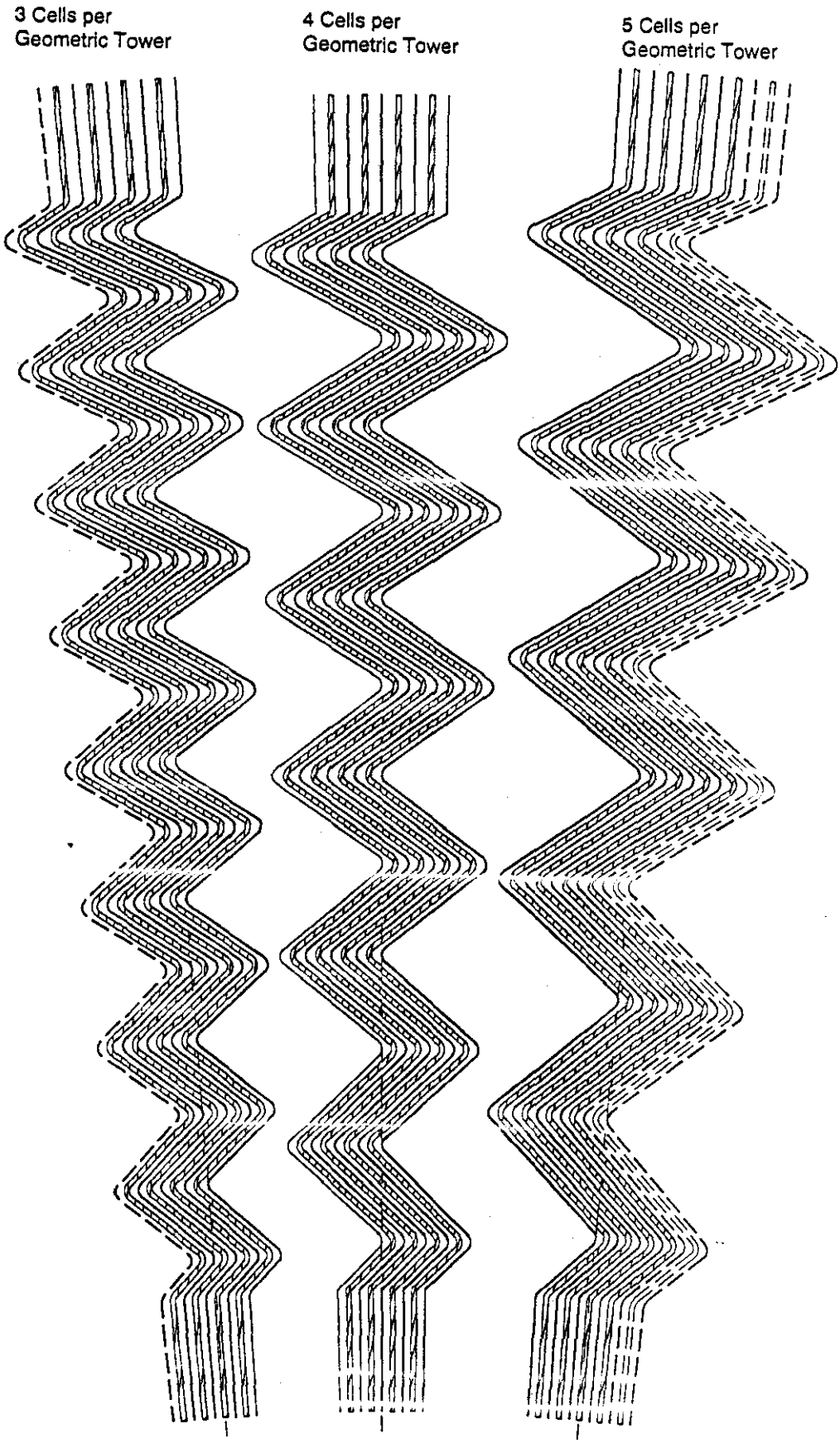

BEasombc_4.CCAD

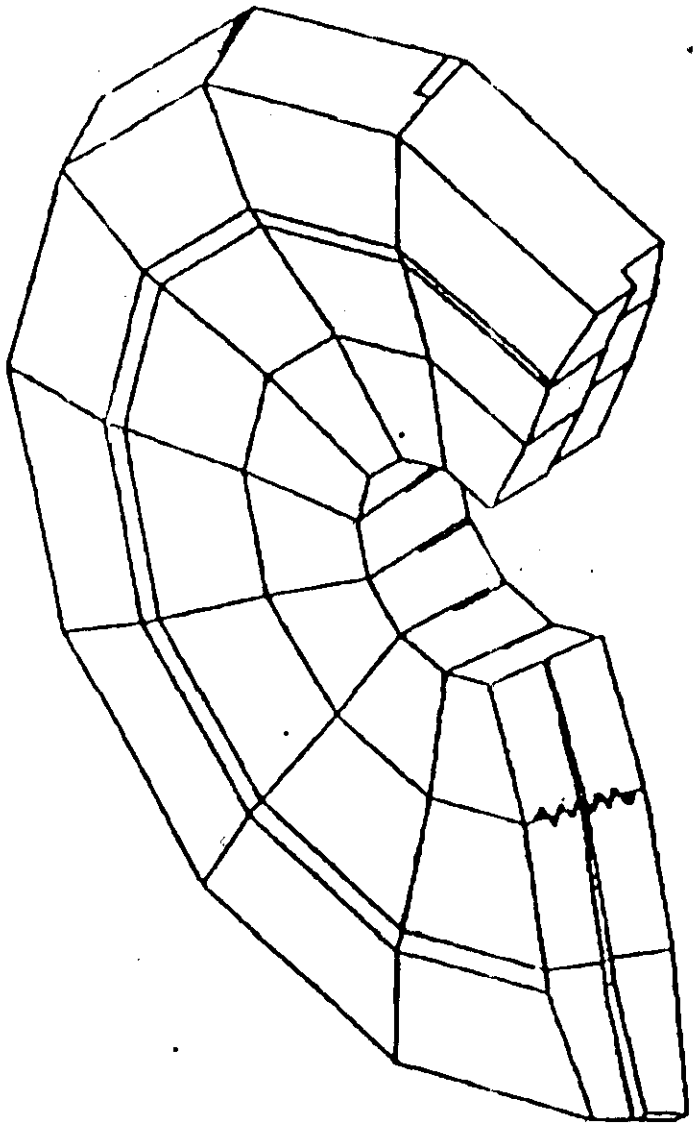

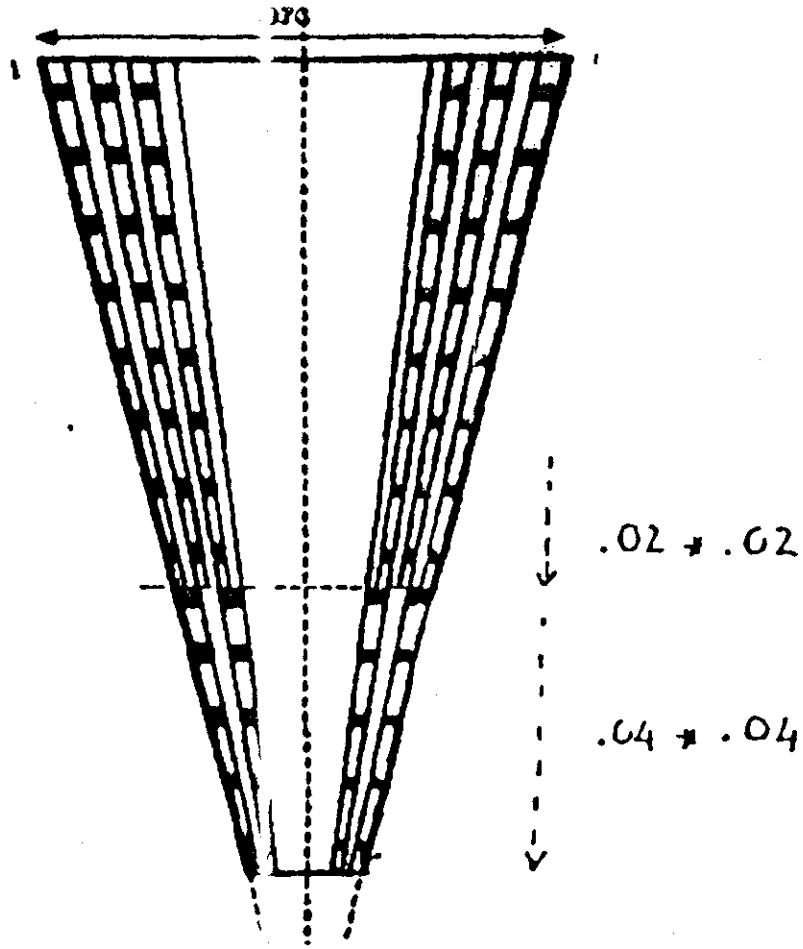
.02 x .02
.04 x .04

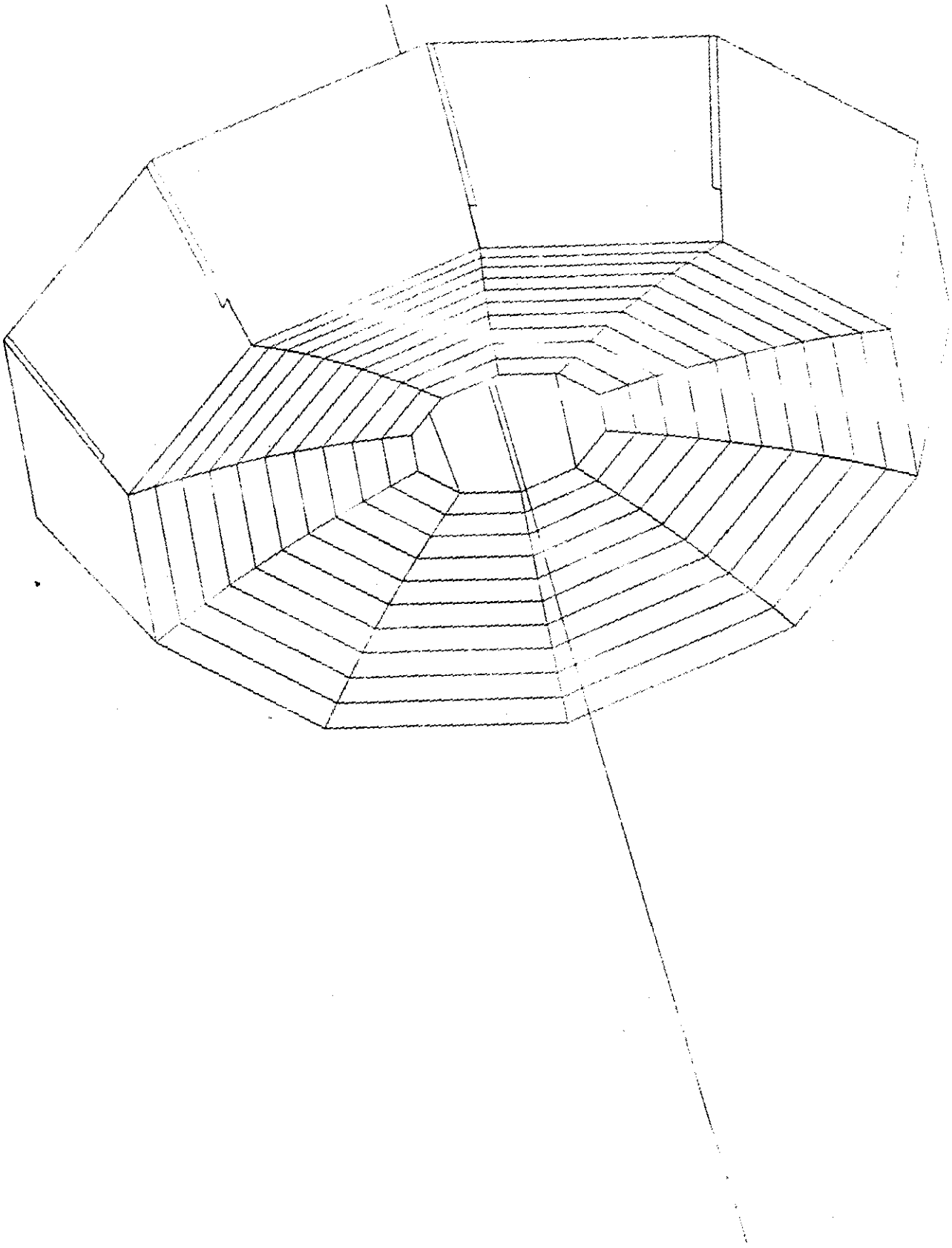

COMPOSITE SHELL MODULE CONCEPT (Module #2)

9 degree Included Angle
2106 mm Length
570 mm Depth
2.38 MT
80 required

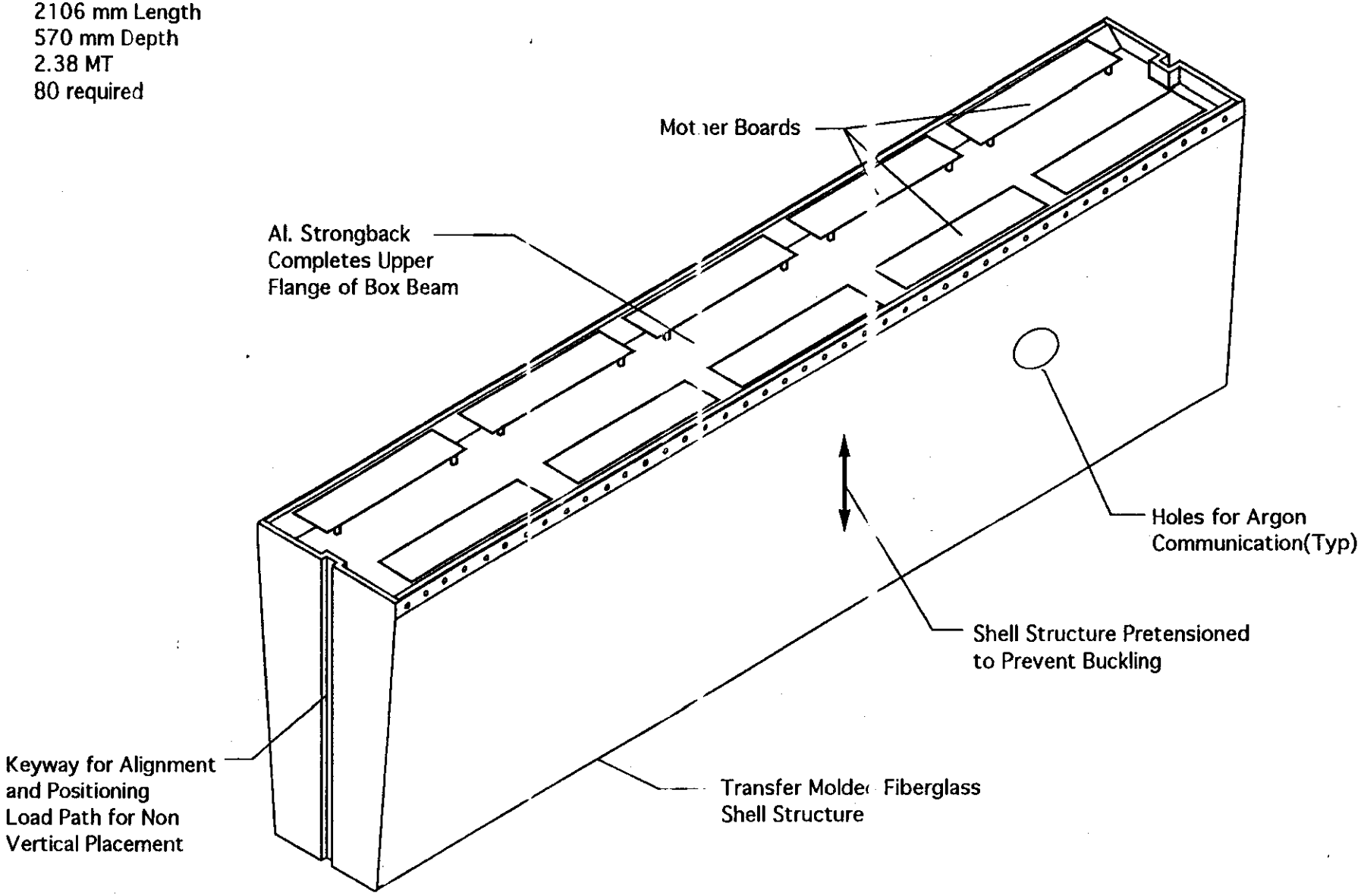

Copper Find Hadron 3/20/92

Material	Density	nteraction Lengt	Radiation Lengt	dE/dx			
	(g/cm3)	(g/cm2)	(g/cm2)	MeV cm2/gm			
C	2.265	86.3	42.7	1.78			
Cu	8.96	134.9	12.86	1.44			
Fe	7.87	131.9	13.84	1.48			
G10	1.7	90.2	33	1.87			
Kapton	1.11	76.74	36.09	1.85			
LAr	1.4	117.2	19.55	1.51			
Mylar	1.39	85.7	39.95	1.86			
Pb	11.35	194	6.37	1.13			
PolyScin	1.032	82	43.8	1.95			
SS	7.92	131.9	13.84	1.48			
Ta	16.6	182.0719569	6.82	1.16			
U	18.95	199	6	1.09			
W	19.3	185	6.76	1.16			
Material	Sensor	Cell Repeat	depth mm	depth g/cm2	Interac ion length	Radiation Length	E deposition
C		14	0.003	0.010	1.1 23E-04	2.23E-04	0.0169
Cu		8	9	64.512	4.7 22E-01	5.02E+00	92.8973
G10		14	0.5	1.190	1.3 93E-02	3.61E-02	2.2253
LAr	S	8	2	2.240	1.9 13E-02	1.15E-01	3.3824
Totals			95.042	67.95151	5.1 64E-01	5.1673E+00	98.5219
	Depth	Density		Effective	Ef ective		
	(cm)	(g/cm3)		cm/Interaction length	cm/Radi tion length	Sampling Fraction	
	9.5042	7.150		18.61	.84	3.43%	

Hadronic Configuration with Electrostatic Transformer

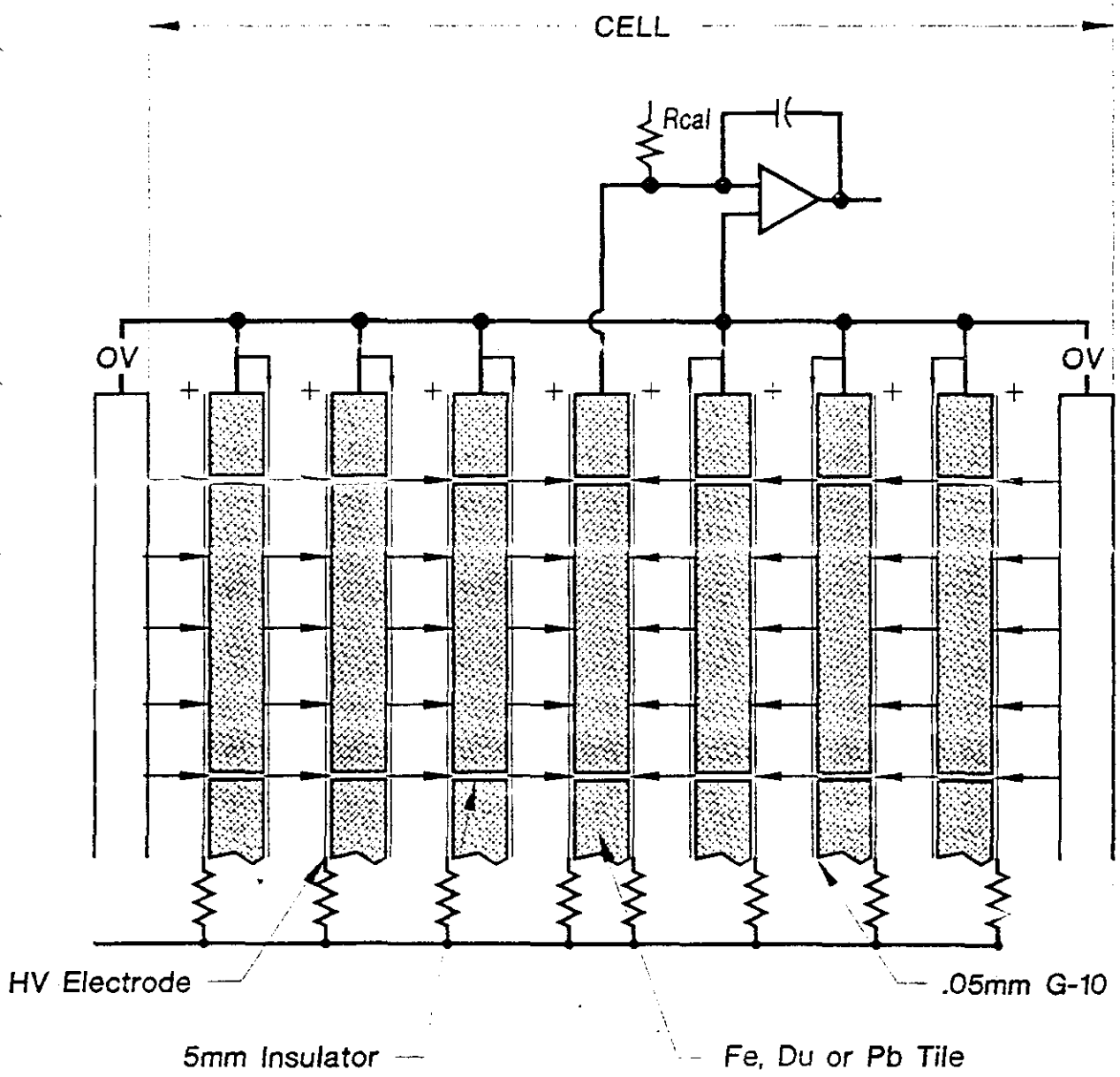

	Barrel		End Cap	
	Fine	Course	Fine	Course
P				
TL				
Rs				
Cell				

SDRC I-DEAS V: FE_Modeling_&_Analysis

13-APR-92 13:41:29

Database module
View : No stored View

Units : IN
Display No stored Option

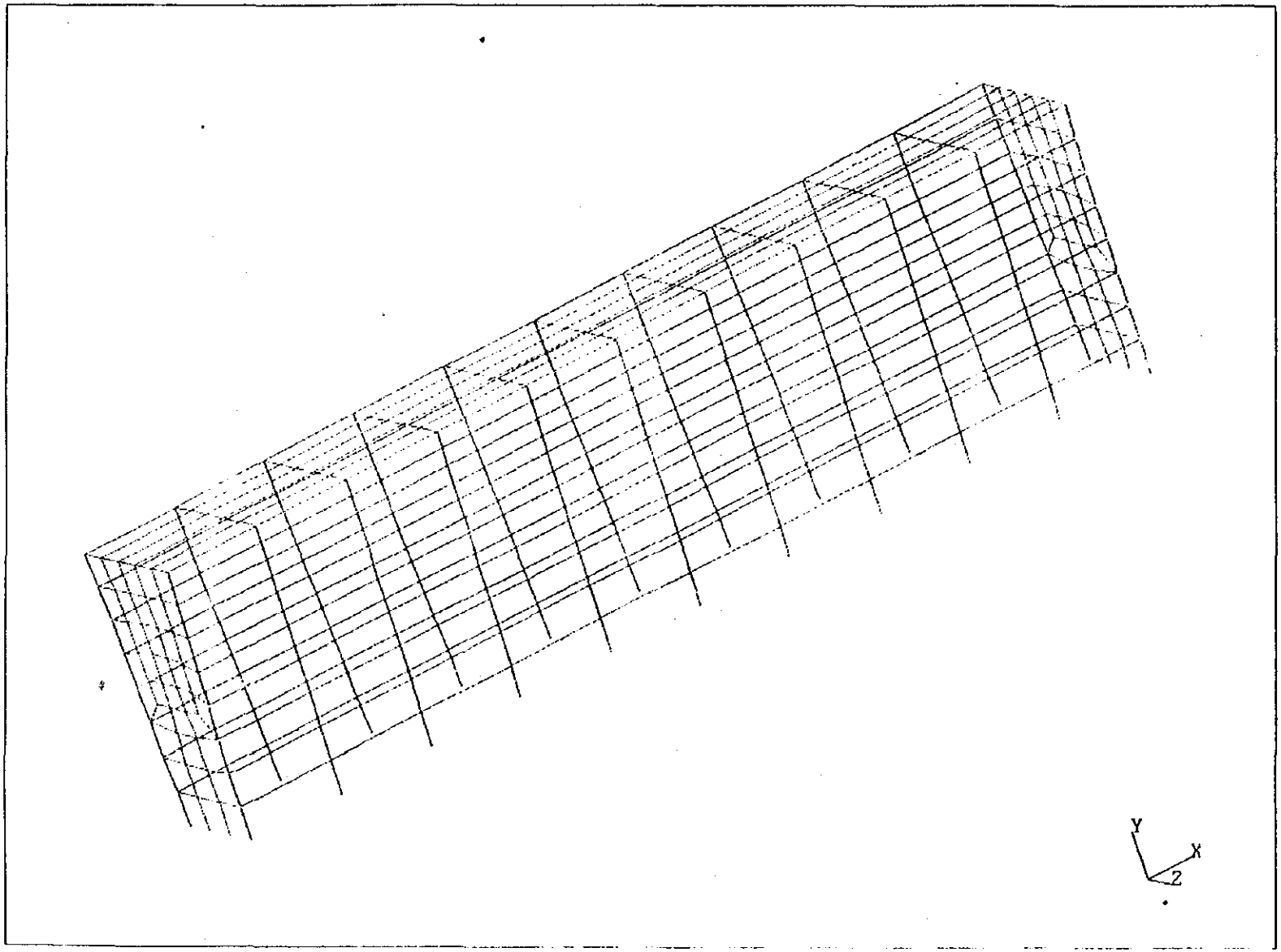

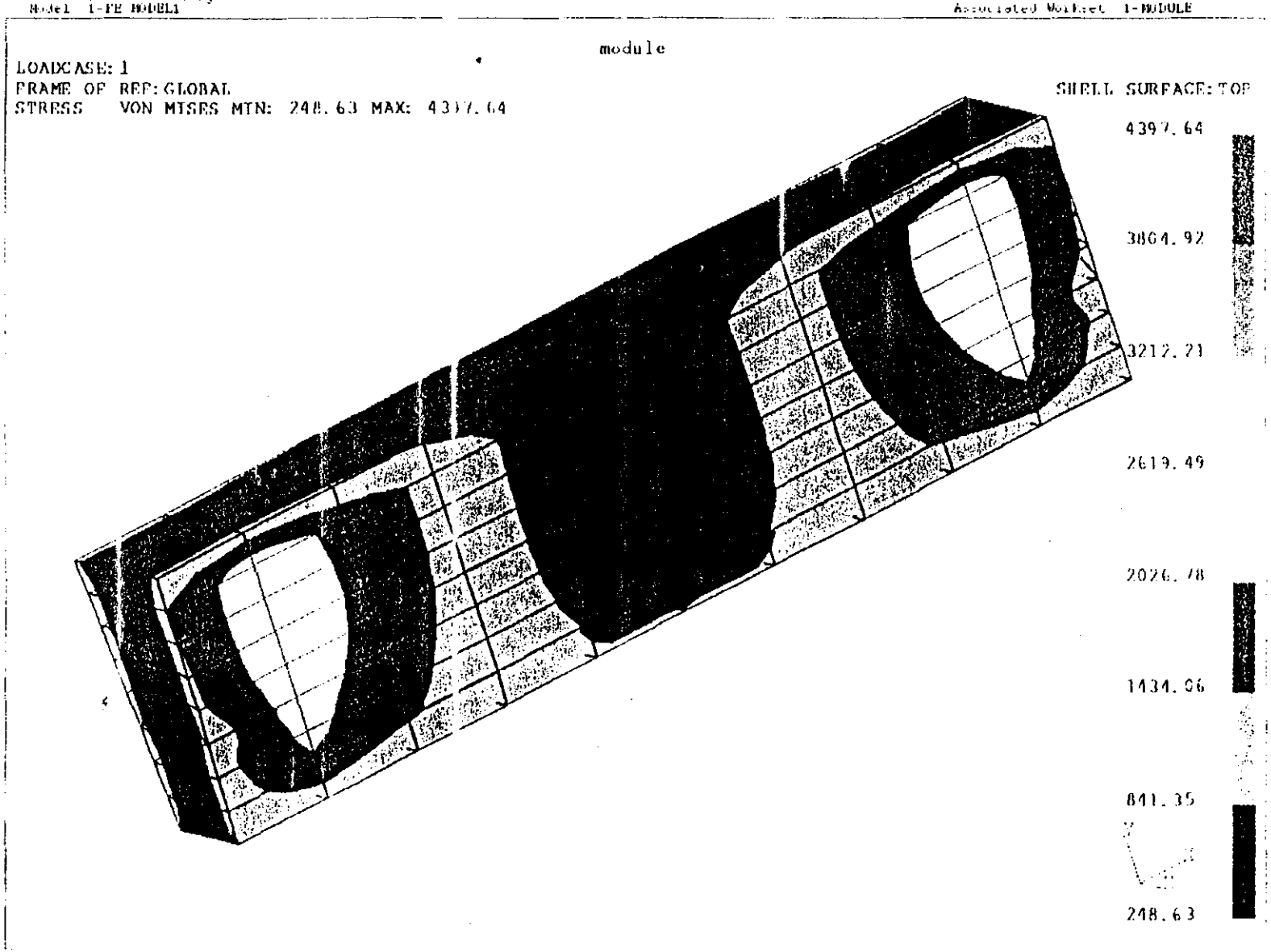
module
LOADCASE: 1
FRAME OF REF: GLOBAL
STRESS VON MISES MIN: 248.63 MAX: 4397.64
SHELL SURFACE: TOP
4397.64
3804.92
3212.21
2619.49
2026.78
1434.06
841.35
248.63

SDRC I-DEAS V1: FE_Modeling_&_Analysis 20-APR-92 13:54:32

Database: module
View : No stored View
Task: Post Processing
Model: 1-FE MODEL1

Units : MM
Display : No stored Option
Model Bin: 1-MAIN
Associated Workset: 1-WORKING_SET1

module

MODE: 1 BUCKLING LOAD FACTOR: -0.20620382
DISPLACEMENT - NORMAL MIN: 0.00 MAX: 160.62

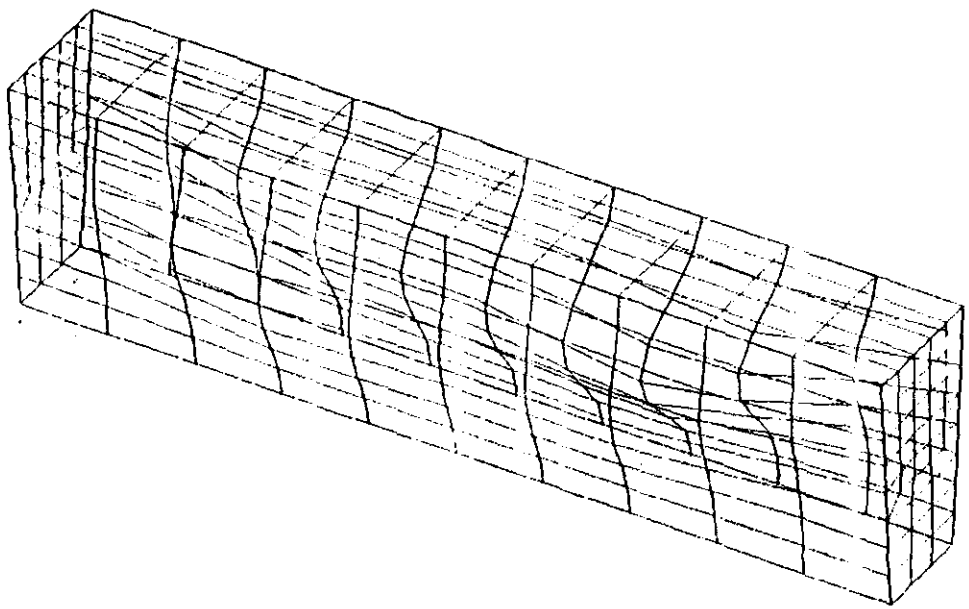

CRAIG DOLD

SDRC I-DEAS VI: FE_Modeling_&_Analysis 20-APR-92 14:3[illegible]

Database: module
View : No stored View
Task: Post Processing
Model: 1-FE MODEL1

Units : [illegible]
Display : No stored Uptio[illegible]
Model Bin: 1-MAIN
Associated Workset: 1-WORKING_SET1

module

MODE: 1 BUCKLING LOAD FACTOR: -0.1801613
DISPLACEMENT - NORMAL MIN: 0.00 MAX: 159.33

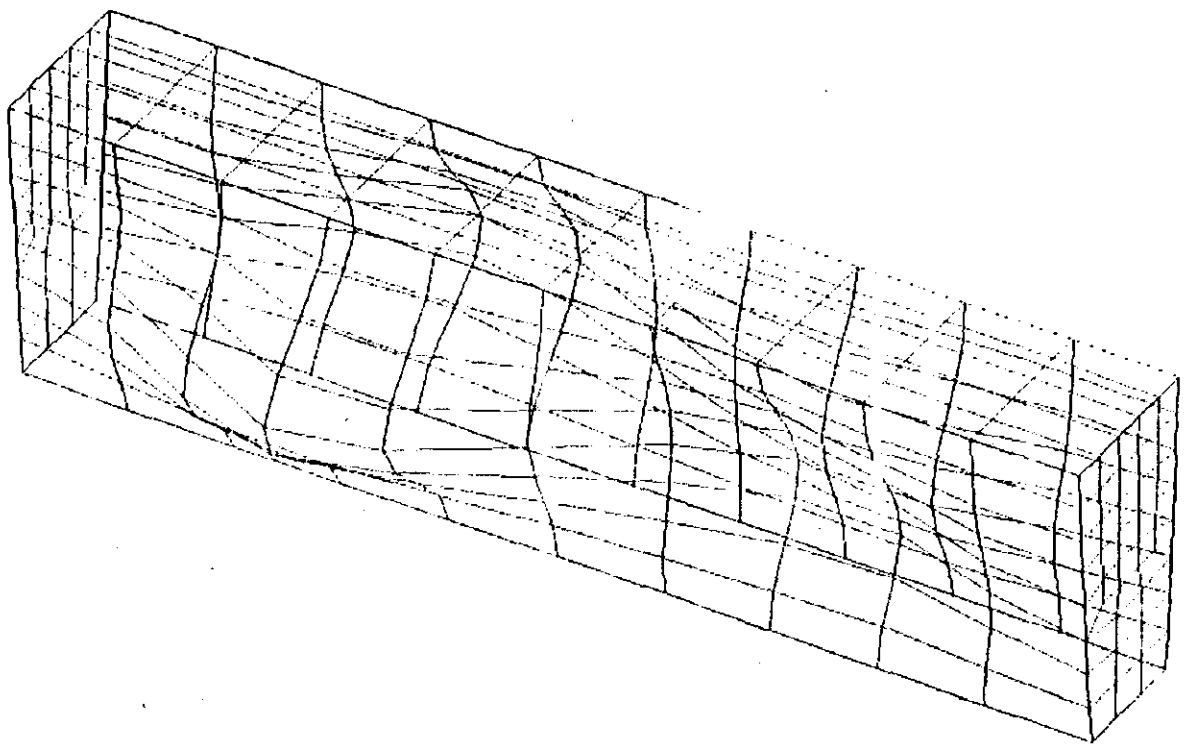

GRAVITY UP

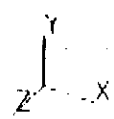

MODULE STACKUP CROSSECTION (Module #2)

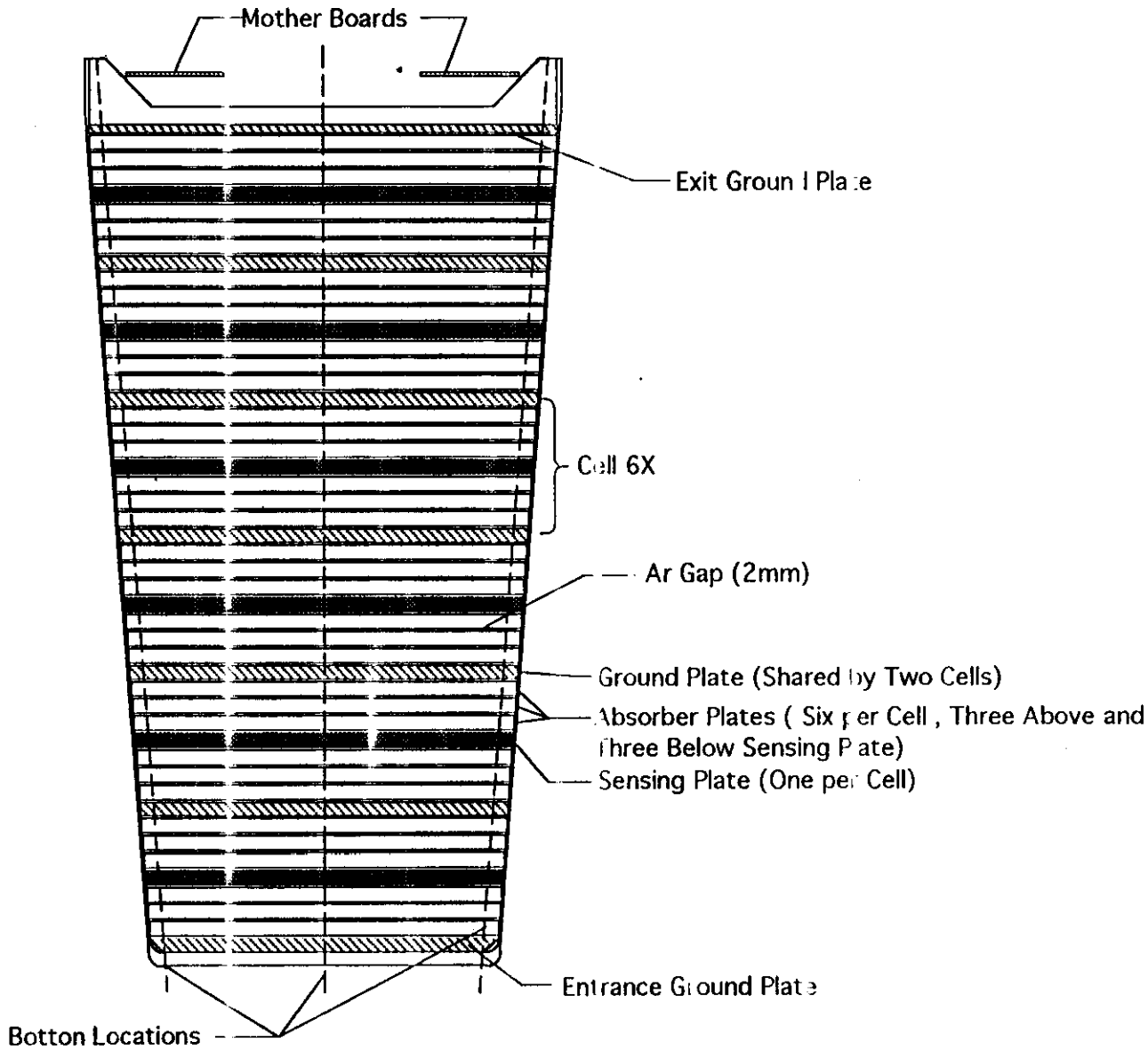

GROUND PLATE (Module #2)

5 Plates
1 Entrance Plate
1 Exit Plate

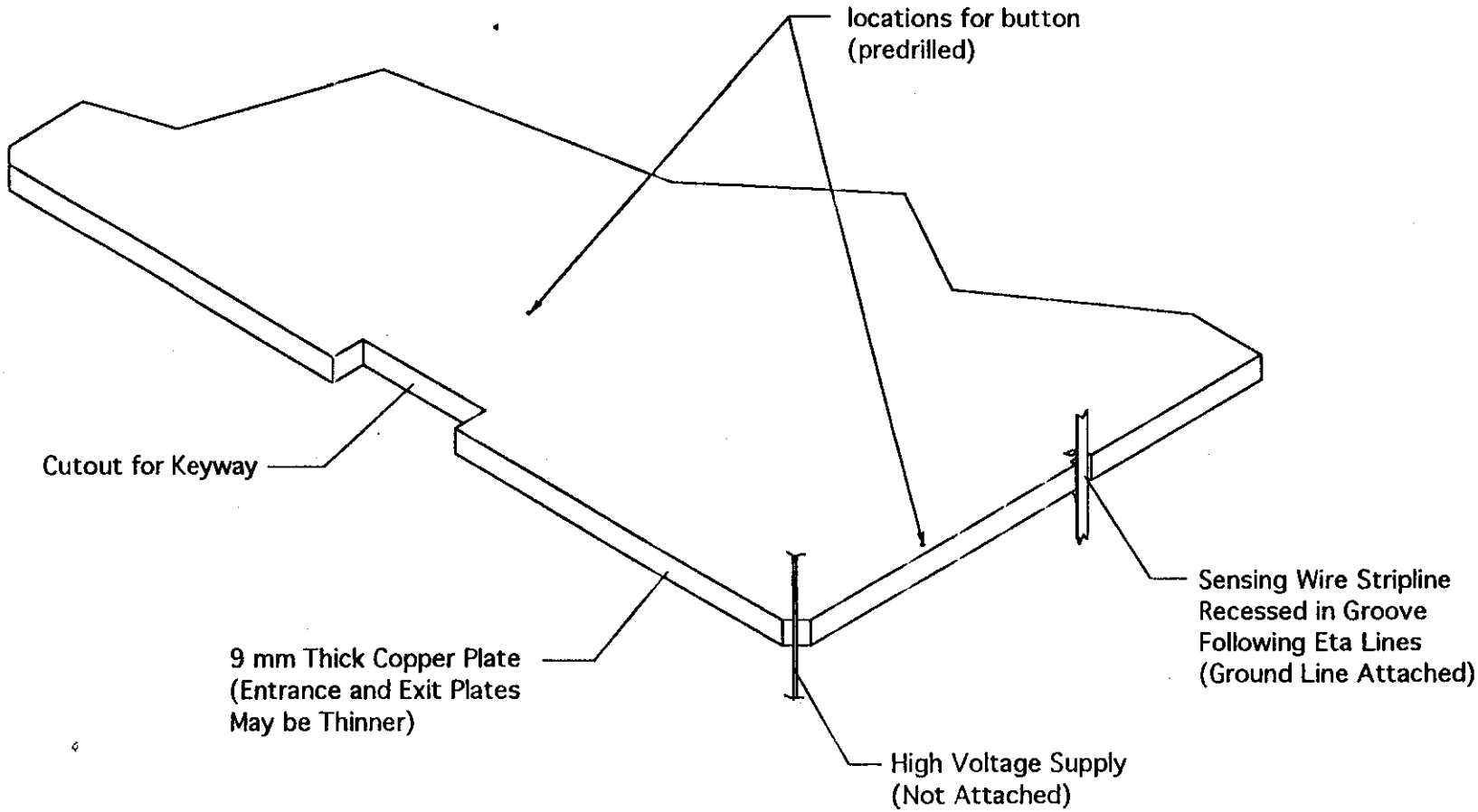

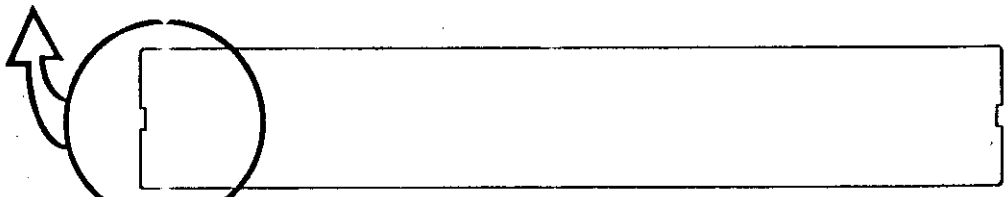

Typical Copper Ground Plate

ABSORBER PLATE (Module #2)

6 Cell Depths
36 Resistive Coating Templates
36 Plates

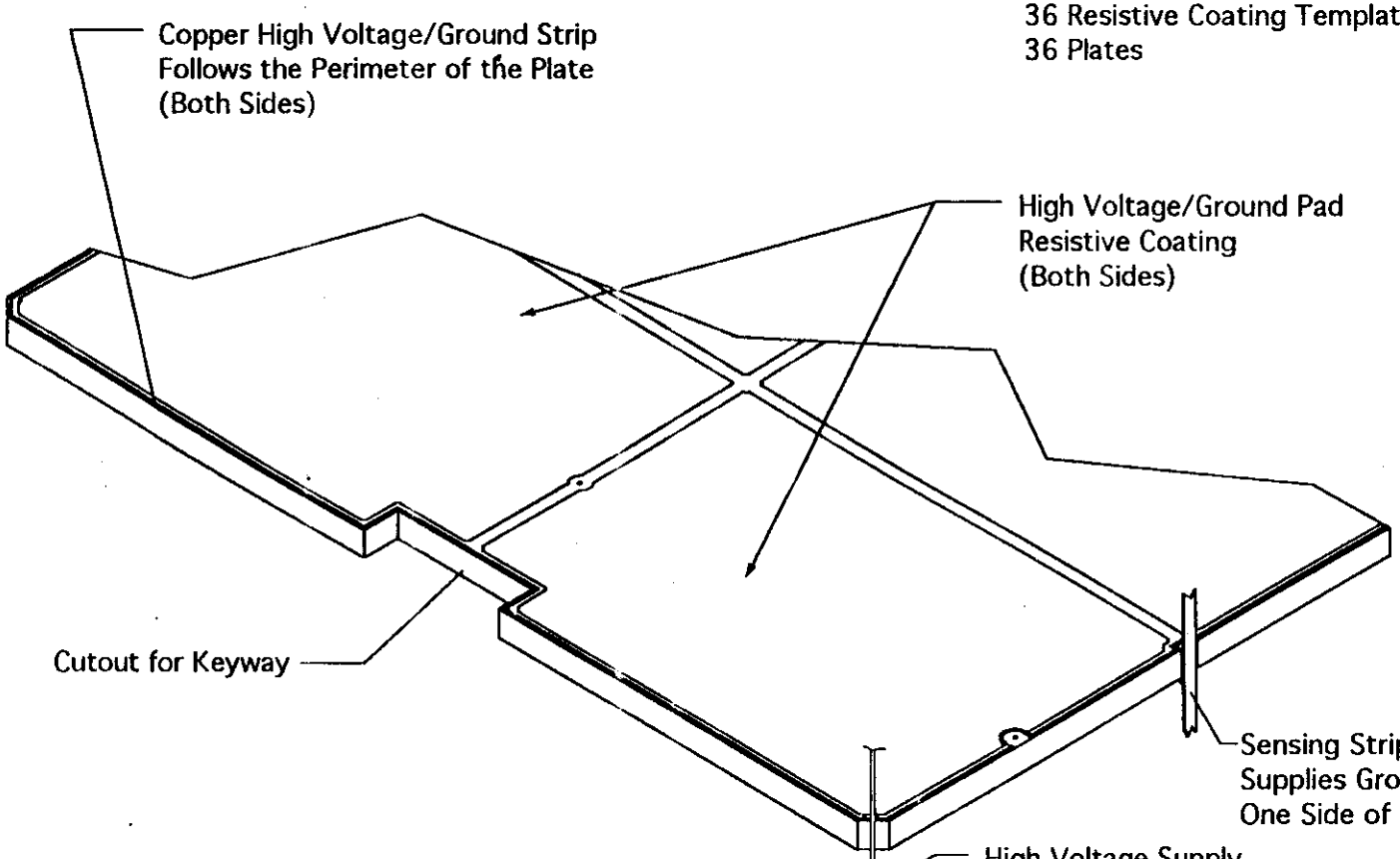

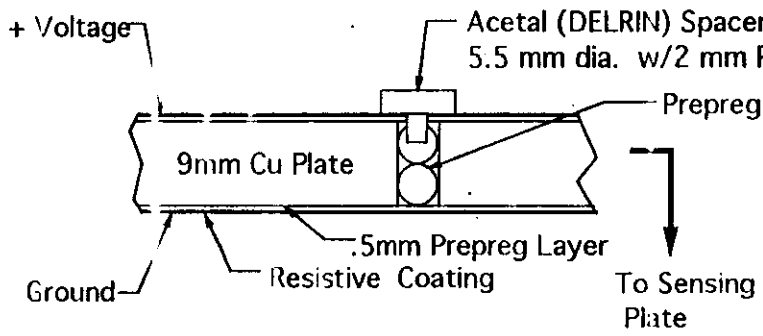

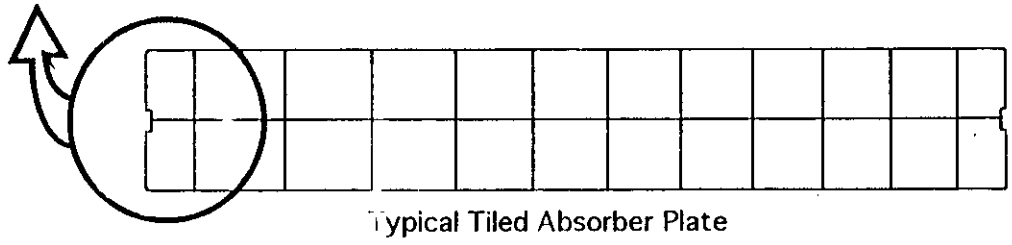

Typical Tiled Absorber Plate

SENSING PLATE (Module #2)

6 Cell Depths
6 Resistive Coating Templates
6 Plates

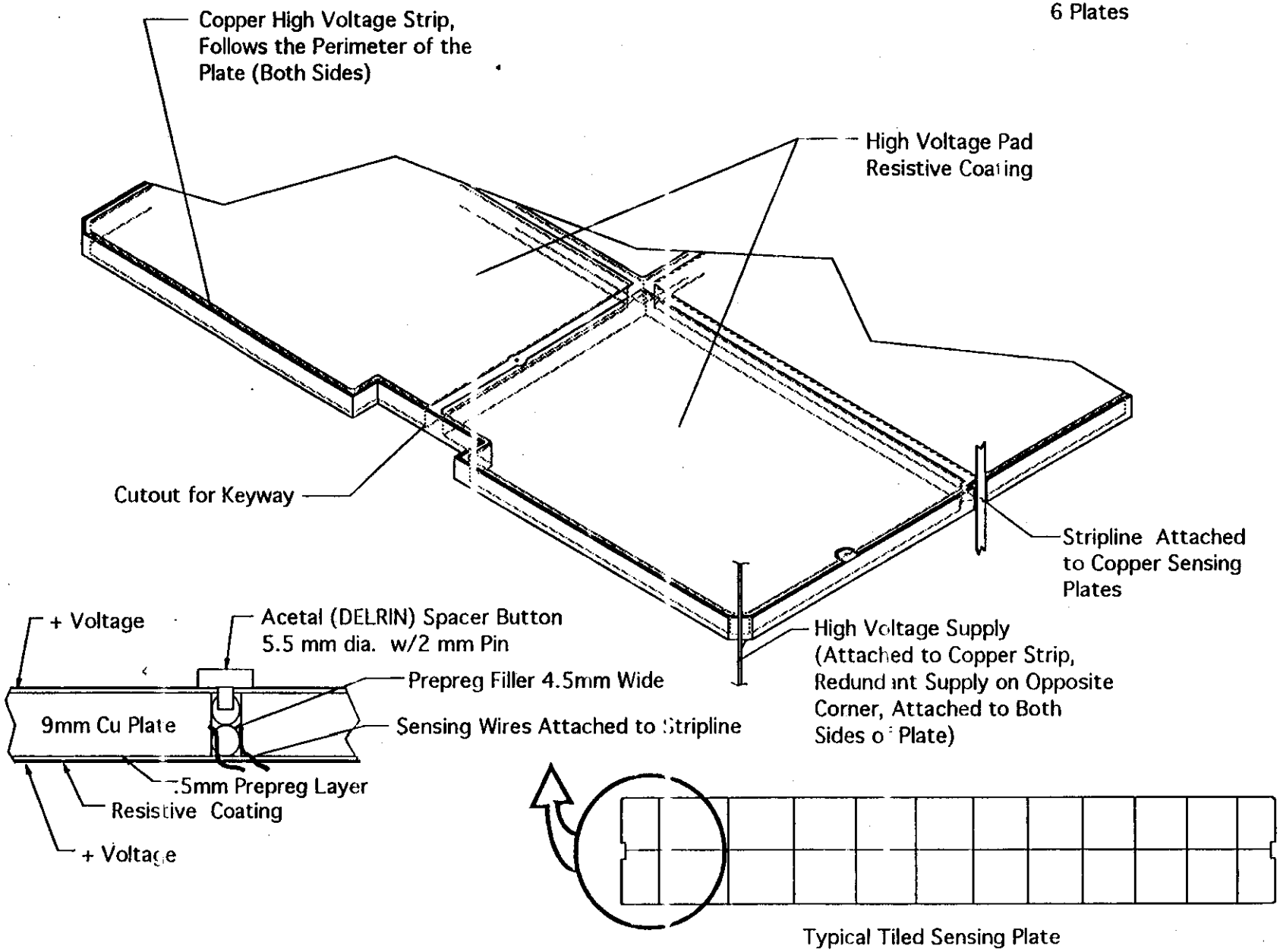

Hadron Module # 2

Six Cells Depth
Segmentation $\Delta\eta \times \Delta\varphi = 0.08 \times 0.08$
80 Modules Required
Wt. = 2.38 MT each
Each Module Contains
the Following:
1 - Top Ground Plate
1 - Bottom Gnd Plate
5 - Included Gnd Plates
36 - Tile Plates
Containing 948 Tile
6 - Sensing Plates
Containing 258 Tile
1 - Strongback
1 - Structural Shell
2 - End Plates
28 - Towers with Strip
Lines and Electronics
λ - Mother Boards

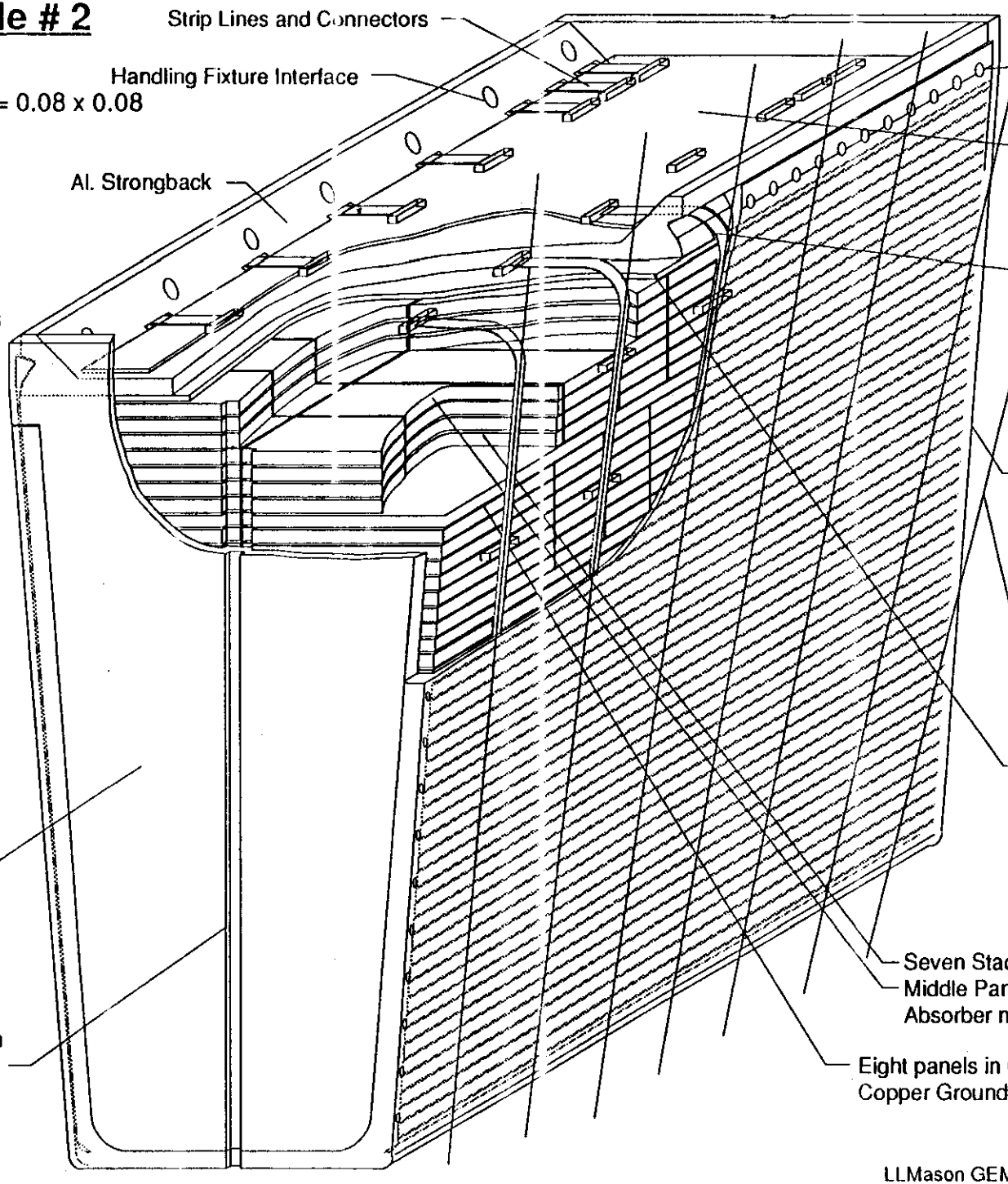

LLMason GEMLAC.HadModDetail 4/18/92

ASSEMBLY POSITION (Module #2)

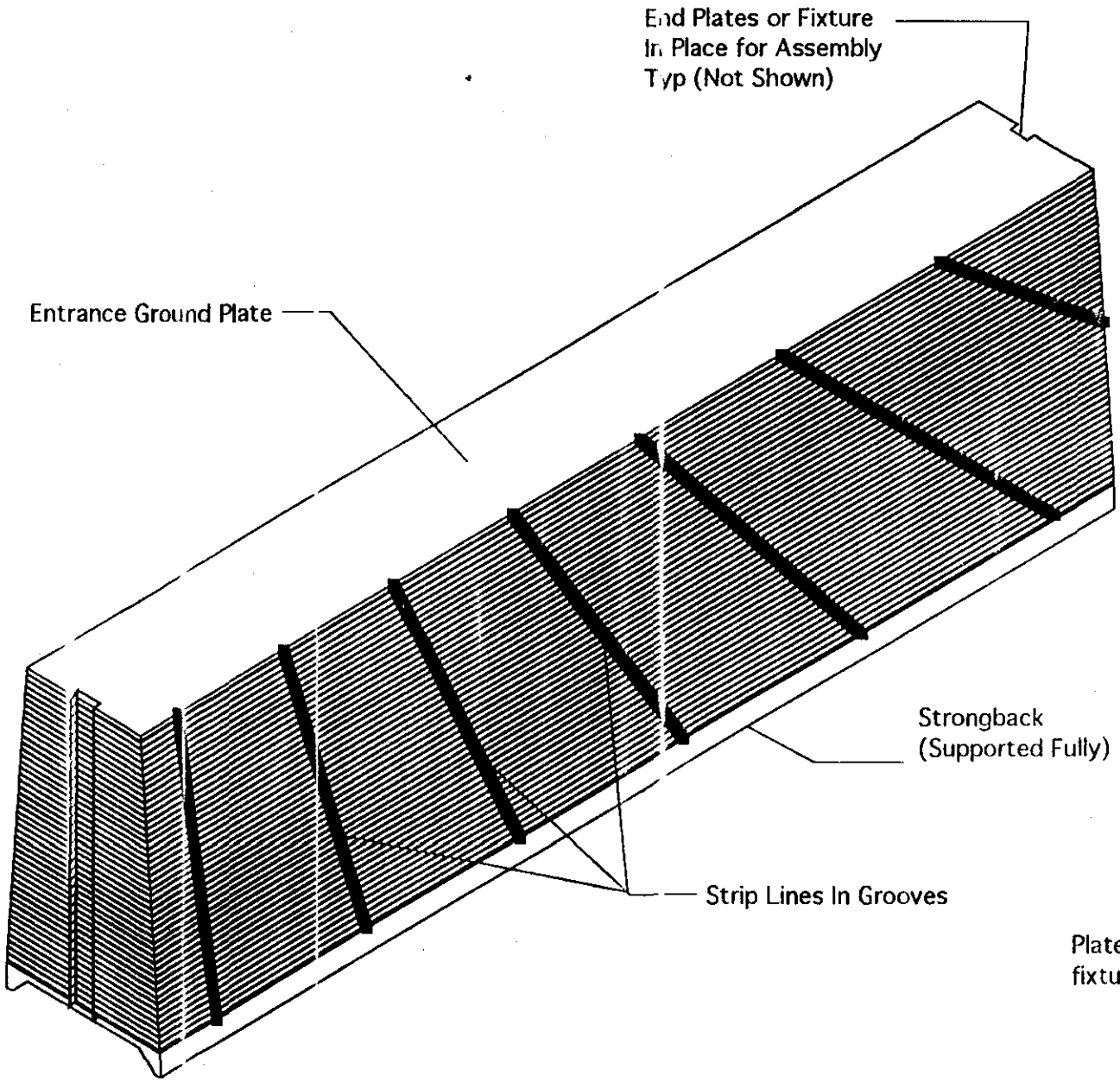

Plates are shown in
fixtured position

Copper Veto 3/20/92

Material	Density	nteraction Lengt	Radiation Lengt	dE/dx			
	(g/cm3)	(g/cm2)	(g/cm2)	MeV cm2/gm			
C	2.265	86.3	42.7	1.78			
Cu	8.96	134.9	12.86	1.44			
Fe	7.87	131.9	13.84	1.48			
G10	1.7	90.2	33	1.87			
Kapton	1.11	76.74	36.09	1.85			
LAr	1.4	117.2	19.55	1.51			
Mylar	1.39	85.7	39.95	1.86			
Pb	11.35	194	6.37	1.13			
PolyScin	1.032	82	43.8	1.95			
SS	7.92	131.9	13.84	1.48			
Ta	16.6	182.0719569	6.82	1.16			
U	18.95	199	6	1.09			
W	19.3	185	6.76	1.16			
Material	Sensor	Cell Repeat	depth mm	depth g/cm2	Interaction length	Radiation Length	E deposition
C		14	0.003	0.010	1.1023E-04	2.23E-04	0.0169
Cu		8	16	114.688	8.5017E-01	8.92E+00	165.1507
G10		14	0.5	1.190	1.3193E-02	3.61E-02	2.2253
LAr	S	8	2	2.240	1.9113E-02	1.15E-01	3.3824
Totals			151.042	118.127513	8.8259E-01	9.0691E+00	170.7754
	Depth	Density		Effective	Effective		
	(cm)	(g/cm3)		cm/Interaction length	cm/Radiation length	Sampling Fraction	
	15.104	7.821		17.11	1.67	1.98%	

Material	Sensor	Percent	depth g/cm2	Interaction length	Radiation Length	E deposition	Mat Index
SS		12.64%	0.100	7.5898E-04	7.23E-03	0.1482	11
LAr	S	3.16%	0.004	3.7748E-05	2.26E-04	0.0067	6
W		76.91%	1.484	8.0239E-03	2.20E-01	1.7219	15
Void		3.24%	0.000	3.2385E-57	3.24E-57	0.0000	14
Ni		2.83%	0.025	1.8909E-04	1.89E-03	0.0368	8
Cu		1.21%	0.011	8.0661E-05	8.46E-04	0.0157	2
Totals			1	1.625066647	9.0904E 03	2.2979E-01	1.9293
		Tube offset	7.50	Tube inner diameter	5		
		Hexagon area	146.14	Outer sleeve thickness	0.2		
				Rod diameter	4.8		
				inner sleeve thickness	0.2		
		Hexagon area	HeavyMet Area	Argon area	Stainless area		
		146.1417869	84.20%	3.16%	12.64%		
		HeavyMet Density		HevyMet Composition	parts by volume	Percentage	depth g/cm2
		(g/cm3)		W	95.00	91.35%	18.335
		18.058625		Void	4.00	3.85%	0.000
				Ni	3.50	3.37%	0.312
				Cu	1.50	1.44%	0.134
			Density	Effective	Effective		Minimum
			(g/cm3)	cm/Interaction length	cm/Radiation length	Sampling Fraction	Sampling Fraction
			16.251	11.00	0.44	0.35%	0.33%

Material	Sensor	Percent	depth g/cm2	Interaction length	Radiation Length	E deposition	Mat Index
SS		11.86%	0.094	7.1199E-04	6.79E-03	0.1390	11
LAr	S	8.89%	0.012	1.0623E-04	6.37E-04	0.0188	6
W		72.39%	1.397	7.5522E-03	2.07E-01	1.6207	15
Void		3.05%	0.000	3.0480E-57	3.05E-57	0.0000	14
Ni		2.67%	0.024	1.7798E-04	1.78E-03	0.0347	8
Cu		1.14%	0.010	7.5919E-05	7.96E-04	0.0147	2
Totals			1	1.537495227	8.6213E-03	2.1668E-01	1.8279
		Tube offset	7.90	Tube inner diameter	5.4		
		Hexagon area	162.15	Outer sleeve thickness	0.2		
				Rod diameter	4.8		
				inner sleeve thickness	0.2		
		Hexagon area	HeavyMet Area	Argon area	Stainless area		
		162.1459364	79.25%	8.89%	11.86%		
		HeavyMet Density		HevyMet Composition	parts by volume	Percentage	depth g/cm2
		(g/cm3)		W	95.00	91.35%	18.335
		18.058625		Void	4.00	3.85%	0.000
				Ni	3.50	3.37%	0.312
				Cu	1.50	1.44%	0.134
			Density	Effective	Effective		Minimum
			(g/cm3)	cm/Interaction length	cm/Radiation length	Sampling Fraction	Sampling Fraction
			15.375	11.60	0.46	1.03%	0.33%

Material	Sensor	Percent	depth g/cm2	Interaction length	Radiation Length	E deposition	Mat Index
SS		10.26%	0.081	6.1595E-04	5.87E-03	0.1202	11
LAr	S	7.69%	0.011	9.1903E-05	5.51E-04	0.0163	6
W		74.95%	1.446	7.8189E-03	2.14E-01	1.6779	15
Void		3.16%	0.000	3.1557E-57	3.16E-57	0.0000	14
Ni		2.76%	0.025	1.8426E-04	1.84E-03	0.0359	8
Cu		1.18%	0.011	7.8600E-05	8.25E-04	0.0153	2
Totals			1	1.5736955[illegible]2	8.7896E-03	2.2307E-01	1.8656
		Tube offset	10.30	Tube inner diameter	7.8		
		Hexagon area	275.63	Outer sleeve thickness	0.2		
				Rod diameter	7.2		
				inner sleeve thickness	0.2		
		Hexagon area	HeavyMet Area	Argon area	Stainless area		
		275.6299053	82.05%	7.69%	10.26%		
		HeavyMet Density		HevyMet Composition	parts by volume	Percentage	depth g/cm2
		(g/cm3)		W	95.00	91.35%	18.335
		18.058625		Void	4.00	3.85%	0.000
				Ni	3.50	3.37%	0.312
				Cu	1.50	1.44%	0.134
			Density	Effective	Effective		Minimum
			(g/cm3)	cm/Interaction length	cm/Radiation length	Sampling Fraction	Sampling Fraction
			15.737	11.38	0.45	0.87%	0.33%

Internal Siphon for Cooling Pre-Amplifiers in the Argon Annulus Within the Barrel Calorimeter

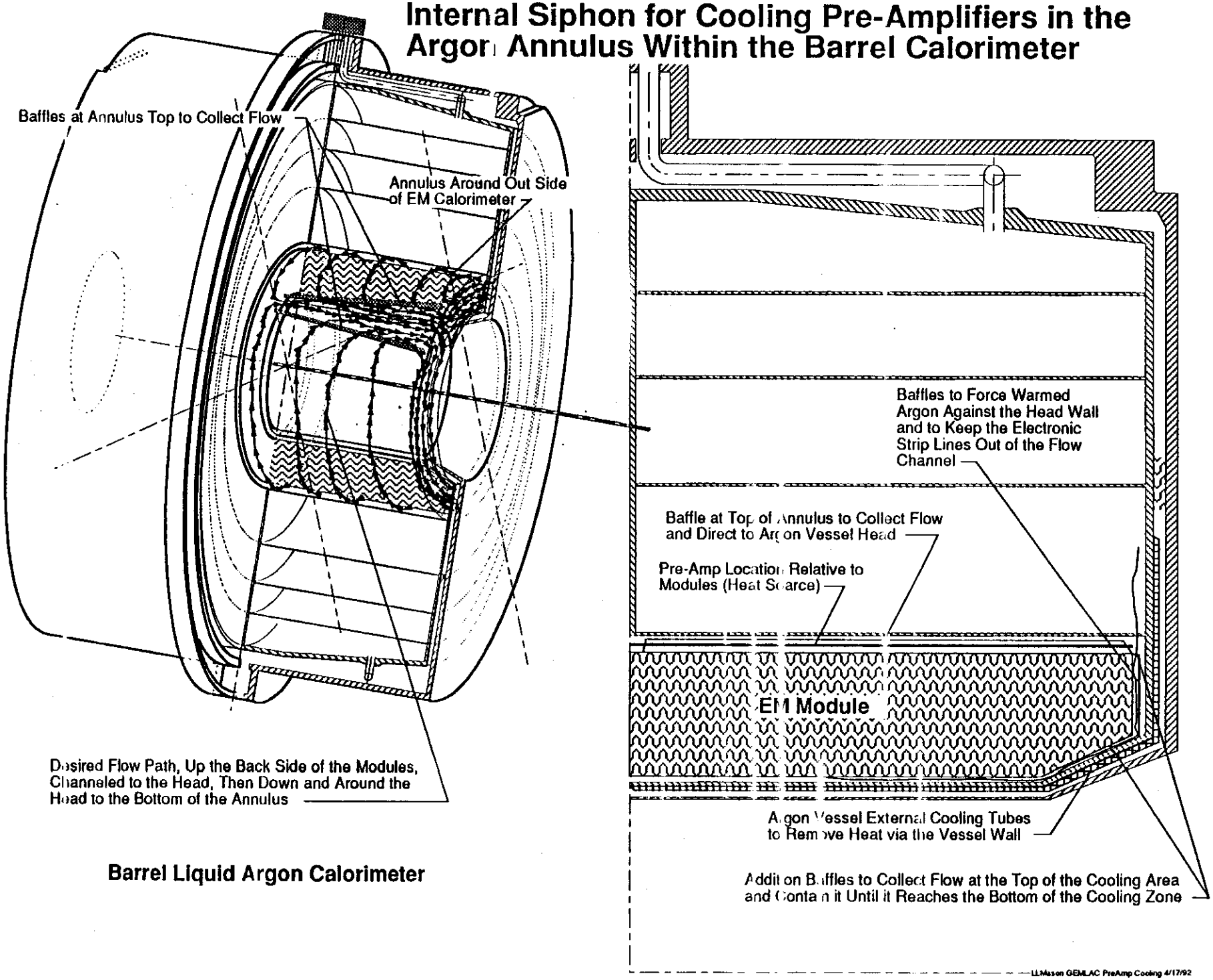

Barrel calorimeter			Type of stay				
	additional info	Depth, mm	Circular radius, mm	Flat radius, mm	Act./Pass.	Int. Length	Comments
inner radius		750	750.0	750.0			
Pre-Radiator		0	750.0	750.0			
Cryostat Vessels							
Vacuum wall	39.4	9	759.0	759.0	P	0.023	
Vacuum Space		50	809.0	809.0			
Argon Wall	39.4	16	825.0	825.0	P	0.041	
Pre-Radiator		50	875.0	875.0			
EM Module							
inner EM electronics	?	50	925.0	925.0			
EM cm/radiation length	1.883						
No. of radiation lengths	25						
accordion EM depth	36.35	470.8	1395.8	1395.8	A	1.295	
outer EM electronics	?	50	1445.8	1445.8			
outer EM cooling	?	10	1455.8	1455.8			
Stay	39.4	13	1468.8	1468.8	P	0.033	
1ST Hadron Module							
degrees/module, a	9						
cm/cell	9.5042						
number of cells	6						
inner radius(flat)			1468.8	1468.8			
radius to inner corner			1473.4				
Hadron depth	18.61	570.3			A	3.064	
Hadron S/B	?	60	2099.1		?		
outer radius (to corner)			2105.6	2105.6			Ro=Rf/cos(a/2)
STAY	39.4	13	2118.6	2118.6	P	0.033	
Second Hadron Module							
degrees/module, a	9						
offset angle, b	2.25						
cm/cell	9.5042						
number of cells	4						
inner radius(flat)			2118.6	2117.0			Ri=(Rf+Rsb)/cos(a/2)*cos(a/2-b)
radius to inner corner			2125.1				
Hadron depth	18.61	380.2			A	2.043	
Hadron S/B	?	60	2558.7		?		
outer radius (to corner)			2566.6	2565.0			Ro=Rf/cos(a/2)
STAY	39.4	13	2579.6	2578.1	P	0.033	
Third Hadronic Module							
degrees/module, a	9						
offset angle, b	2.25		n/a				
cm/cell	9.5042						
number of cells	3						
inner radius(flat)			2579.6	2576.1			Ri=(Rf+Rsb)/cos(a/2)*cos(a/2-b)
radius to inner corner			2587.6				
Hadron depth	18.61	285.1			A	1.532	
Hadron S/B	?	60	2924.8		?		
outer radius (to corner)			2933.8	2930.2			Ro=Rf/cos(a/2)
STAY	39.4	13	2946.8	2943.3	P	0.033	
Fourth Hadronic Module							
degrees/module, a	9						
offset angle, b	2.25		n/a				
cm/cell	15.104						
number of cells	2						
inner radius(flat)			2946.8	2941.0			Ri=(Rf+Rsb)/cos(a/2)*cos(a/2-b)
radius to inner corner			2955.9				
Hadron depth	17.11	302.1			A	1.766	
Hadron S/B	?	55	3303.9		?		
outer radius (to corner)			3314.1	3308.3			Ro=Rf/cos(a/2)
Extra Space for Utility Access		0	3314.1	3308.3			
Cryostat Vessels							
argon Vessel	39.4	50	3364.1	3358.3	P	0.127	
vacuum space		172.5	3536.6	3530.8			
vacuum Vessel	39.4	63.5	3600.1	3594.3	P	0.161	
			3600.1	3594.3			

Total Active Absorbtion lengths = 9.70
Total Passive Absorbtion lengths = 0.484
Total Absorbtion lengths = 10.1833

Printed 4/21/92 11:50 AM

Endcap calorimeter	additional info	Depth, mm	Z-position mm	Act./Pass. int.	Length	Commen:
Front Face Position			2723.0			
Cryostat Vessels						
Vacuum wall	73	13	2736.0	P	0.018	
Vacuum Space		50	2786.0			
Argon Wall	39.4	50	2836.0	P	0.127	
EM Module						
Pre-Radiator		0	2836.0			
inner EM electronics	?	50	2886.0			
EM cm/radiation length	1.883					
No. of radiation lengths	25					
accordion EM depth	36.35	520	3406.0	A	1.430	
outer EM electronics	?	50	3456.0			
outer EM cooling	?	13	3469.0			
Washer	39.4	0	3469.0	P	0.000	
1ST Hadron Module (inner)						
degrees/module, a	360					
cm/cell	9.5042					
number of cells	6					
Hadron depth	18.61	570.3	4039.3	A	3.064	
Hadron S/B	?	76	4115.3	?		
Washer	39.4	35	4150.3	P	0.089	
Second Hadron Module (inner)						
degrees/module, a	360					
cm/cell	9.5042					
number of cells	4					
Hadron depth	18.61	380.2	4530.4	A	2.043	
Hadron S/B	?	76	4606.4	?		
Washer	39.4	0	4606.4	P	0.000	
Third Hadronic Module (inner)						
degrees/module, a	360					
cm/cell	15.104					
number of cells	2					
Hadron depth	17.11	302.1	4908.5	A	1.766	
Hadron S/B	?	76	4984.5	?		
Washer	39.4	13	4997.5	P	0.033	
Fourth Hadronic Module (inner)						
degrees/module, a	360					
cm/cell	15.104					
number of cells	3					
Hadron depth	17.11	453.1	5450.6	A	2.648	
Hadron S/B	?	76	5526.6	?		
Extra Space for Utility Access		0	5526.6			
Cryostat Vessels						
argon Vessel	39.4	50	5576.6	P	0.127	
vacuum space		50	5626.6			
vacuum Vessel	39.4	37	5663.6	P	0.094	

5663.6

Total Active Absorbtion length = 10.95
Total Passive Absorbtion lengt = 0.487
Total Absorbtion lengths = 11.4386

DRAFT

Calorimeter Module Weights

CENTRAL BARREL CALORIMETER WEIGHT =783 MT
ENDCAP CALORIMETER WEIGHT = 520 MT each
TOTAL CALORIMETER WEIGHT = 1823 MT
Weights have zero Margin

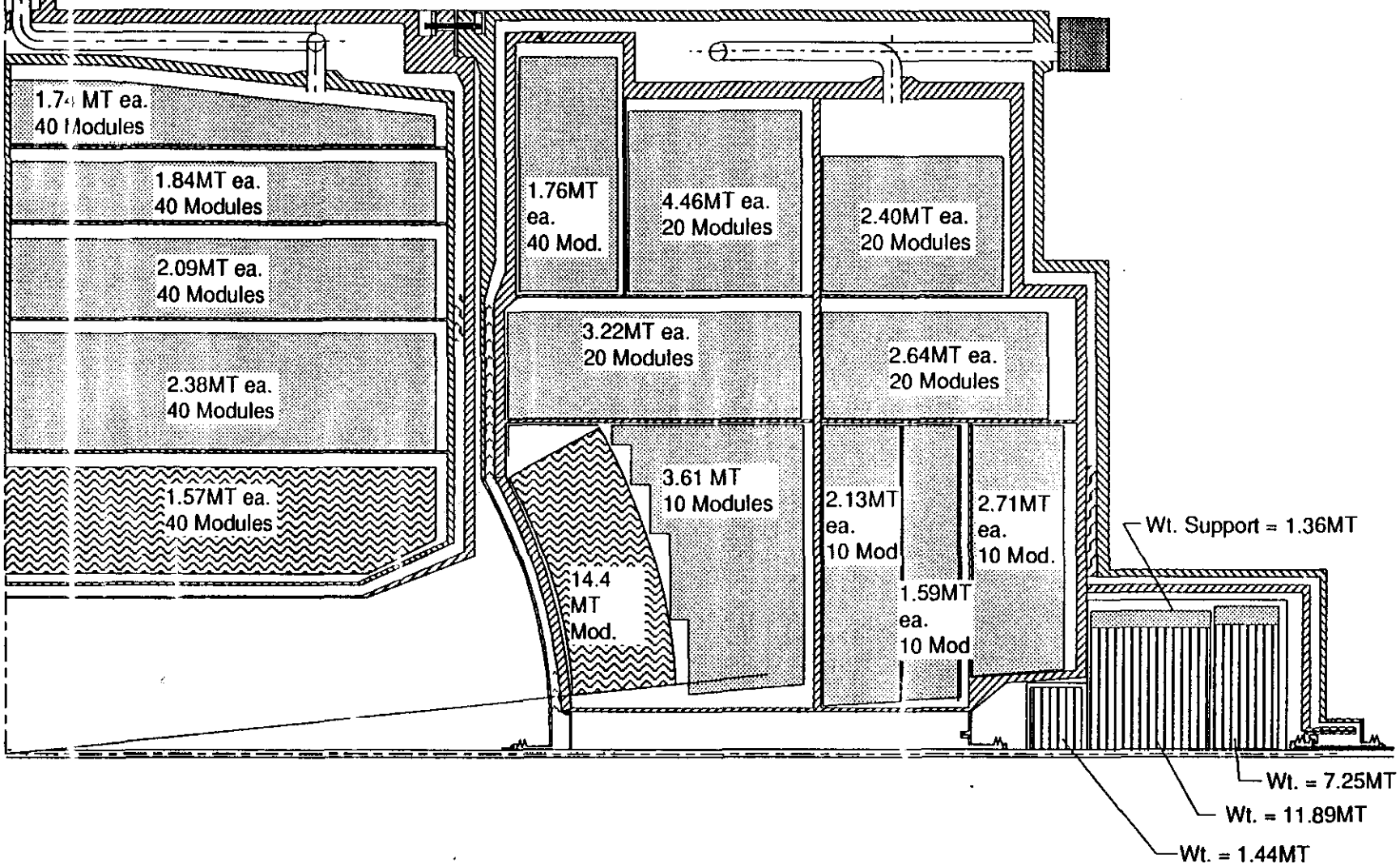

LLMason GEMLAC.Wt 4/16/92

GEM Calorimeter Wall Thicknesses and Vessel Weights

(Thickness in Millimeters, Weights in Metric Tonnes)

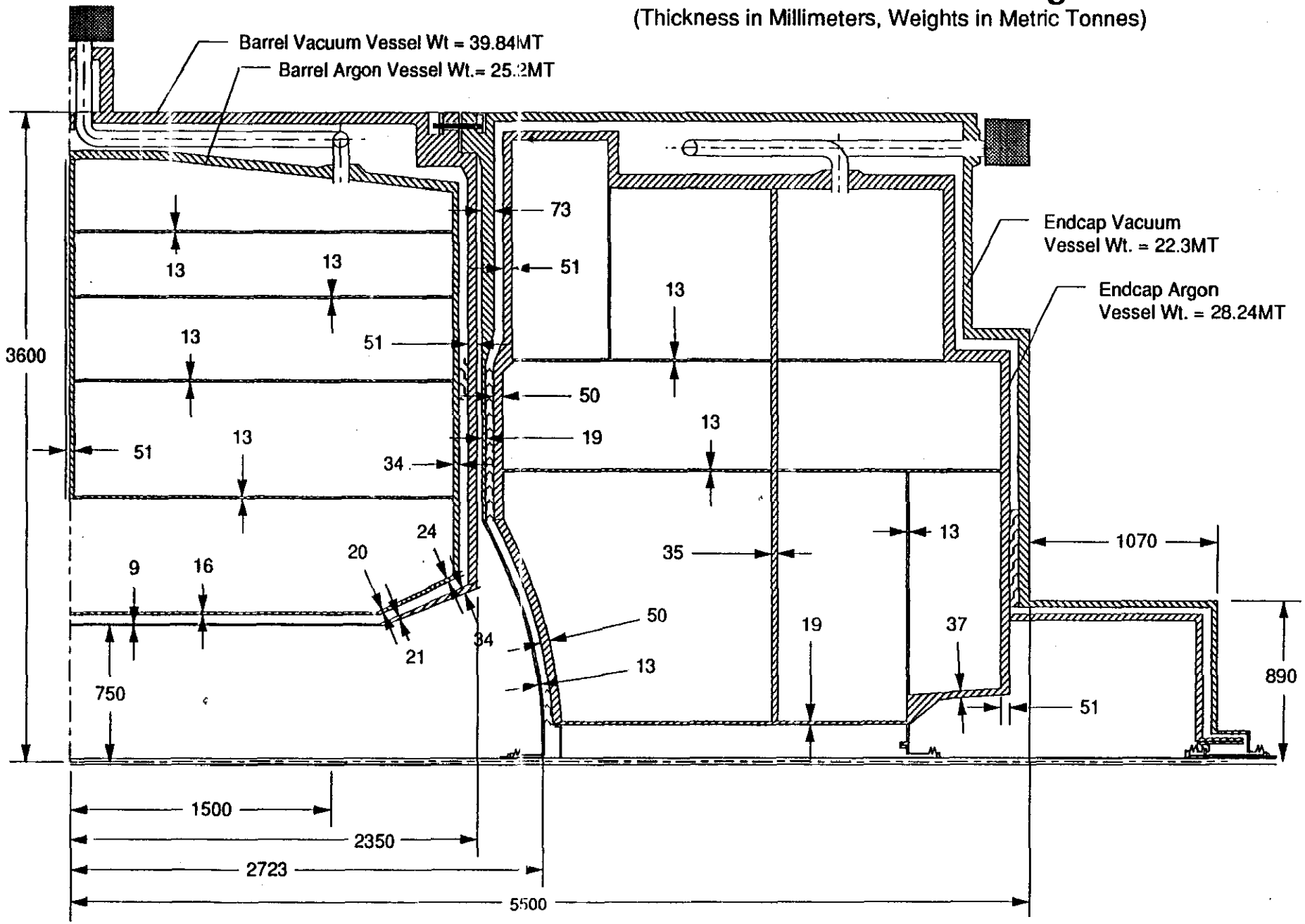

LLMason GEMLAC. Thicknesses 4/16/92

GEM CALORIMETER LIQUID ARGON VOLUMES

Volumes in Liters

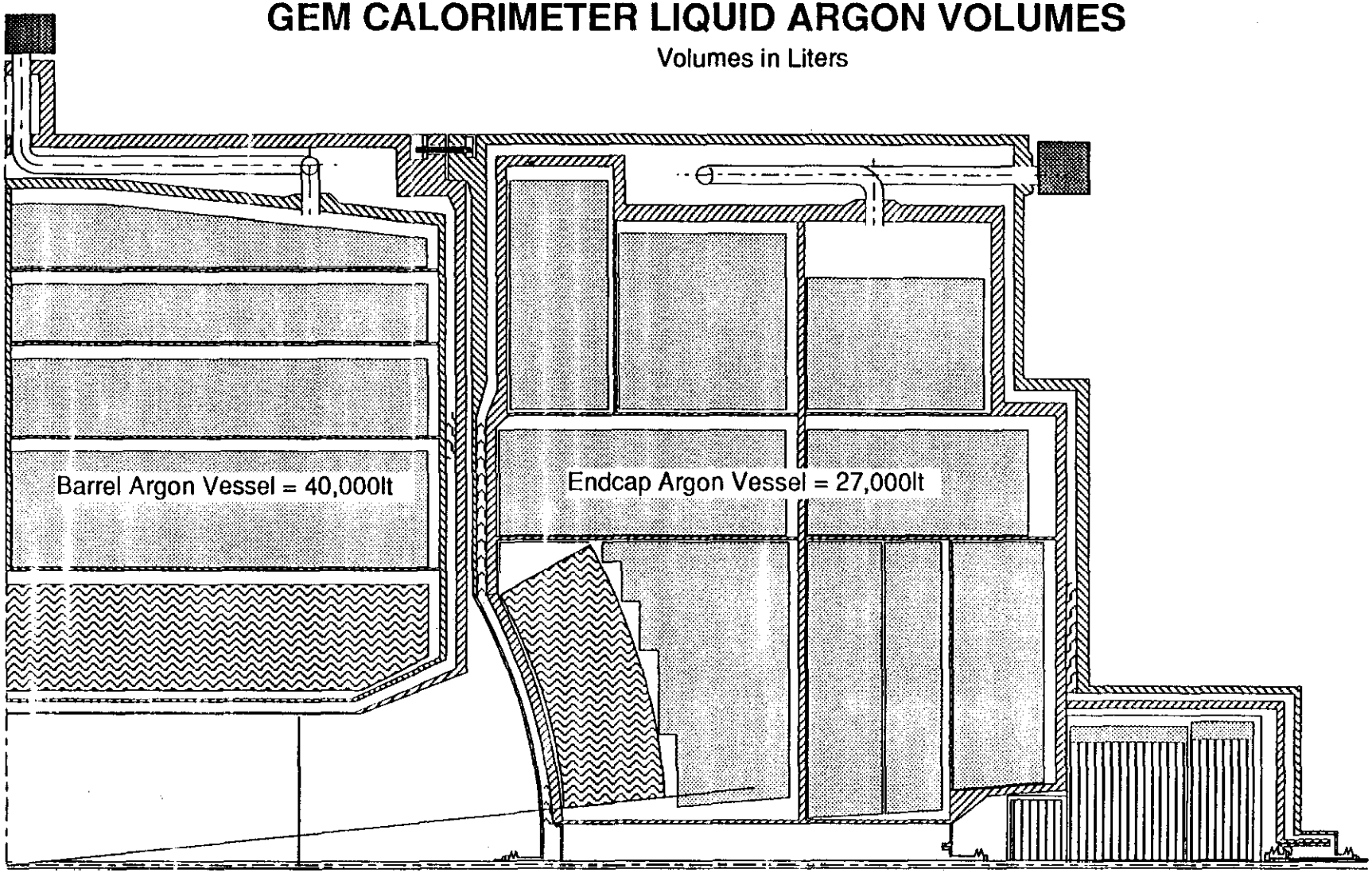

Total Argon Calorimeter Vessel Volume = 94,000lt

Three Head Vessels Total Volume = 3,600lt

Reserve in Holding Vessel = 6000lt

Total Argon on Sight = 103,600lt

Two 60,000lt Holding Vessels are Required in the Hall

LLMason GEMLAC.Wt & Vol 4/16/92

GEM Liquid Argon Calorimeter

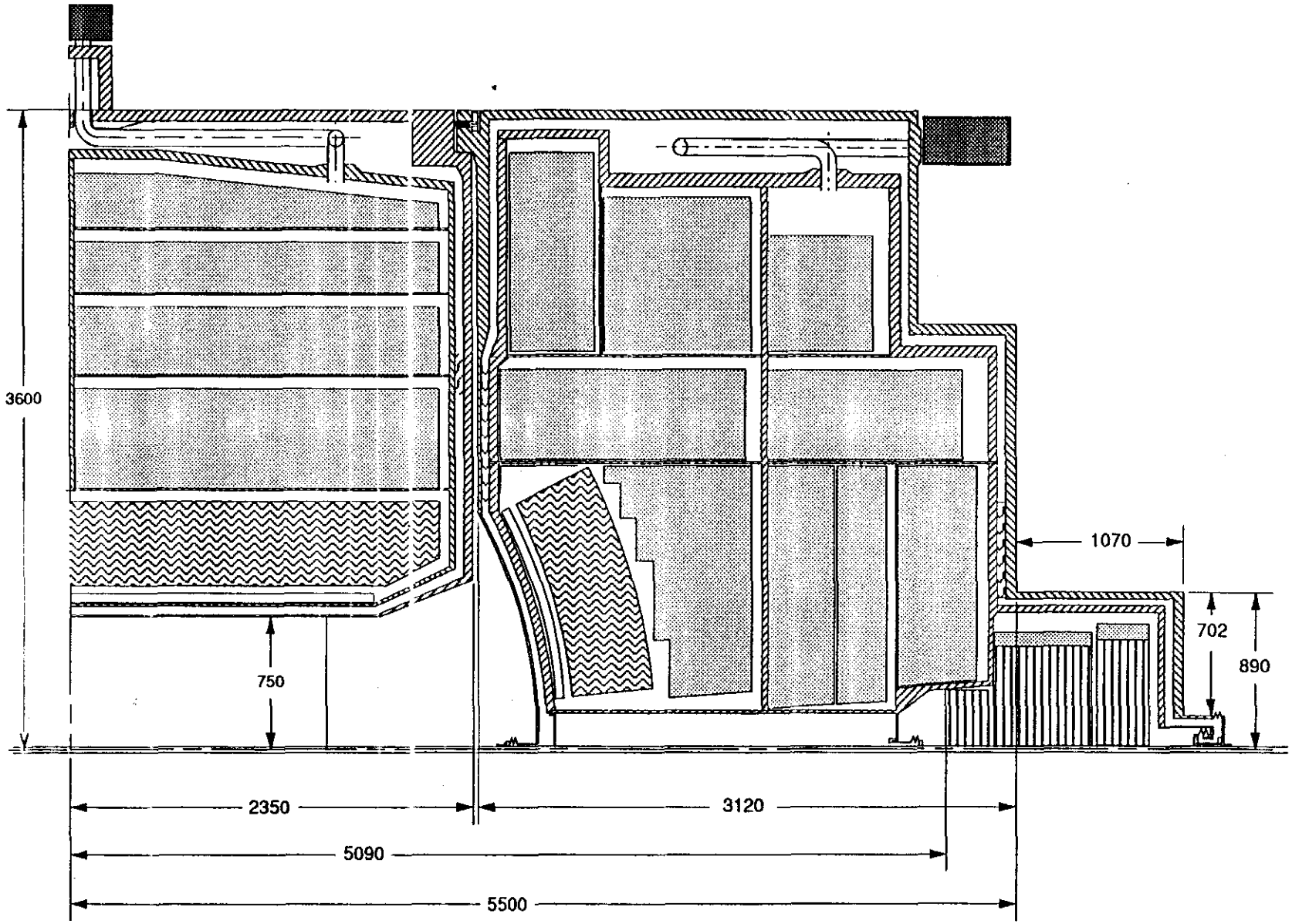

KLKillian Inner Calorimeter Walls 4/13/92

Blow-Up of Central Endcap and Forward Calorimeter

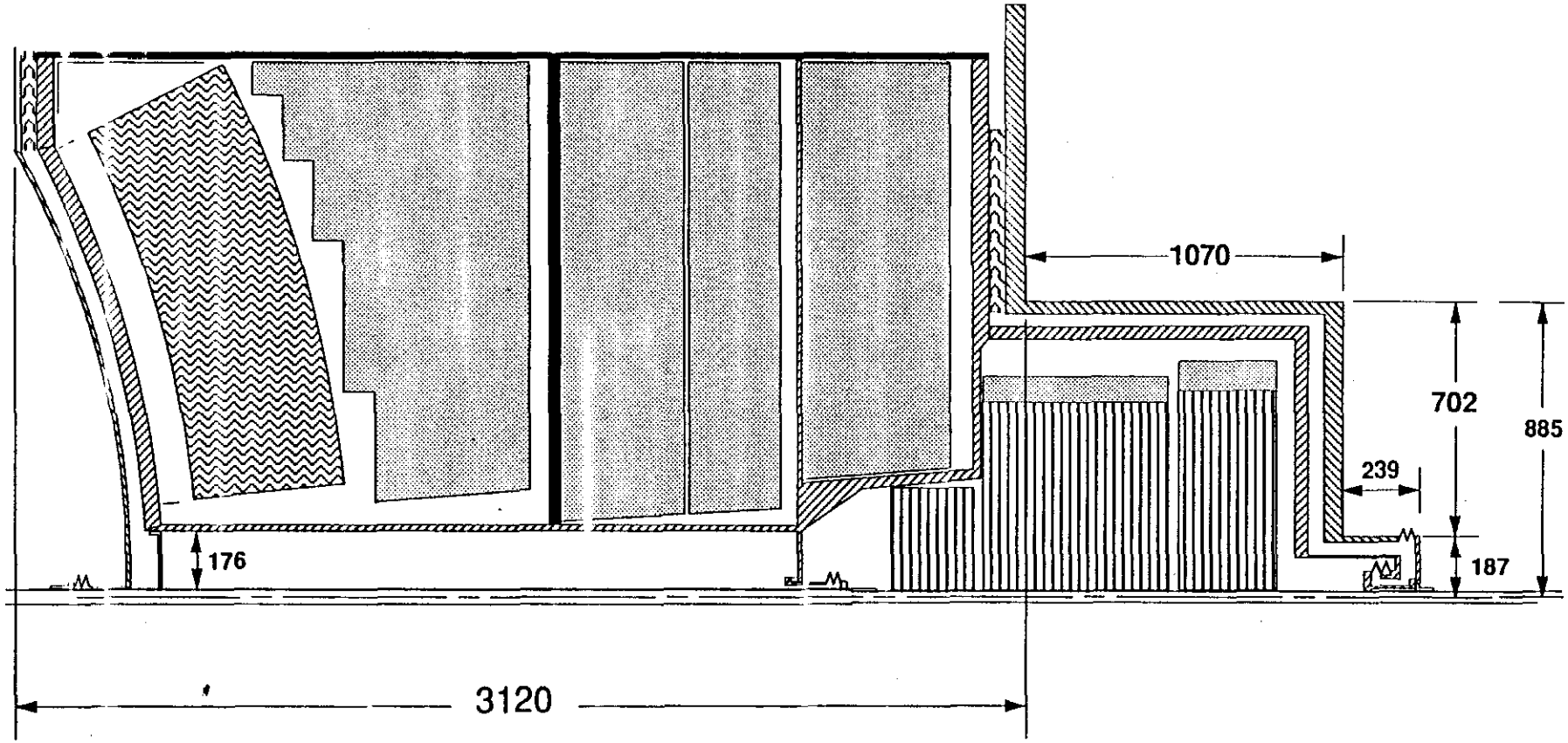

KLKillian Central Calorimeter Walls 4/20/92

View with10x Expansion in Vertical Direction

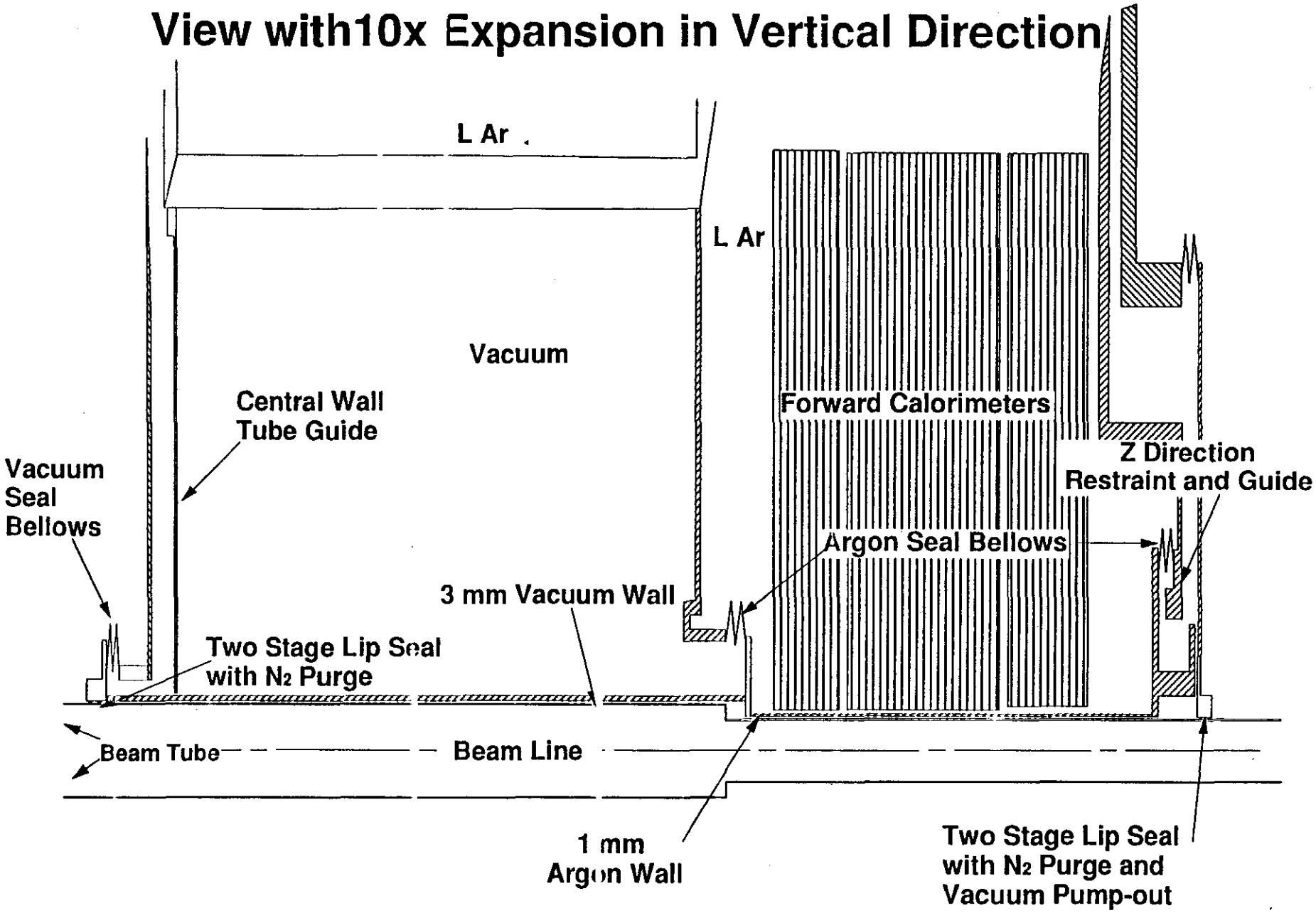

KLKillian Central Calorimeter Walls 4/20/92

Feedthroughs

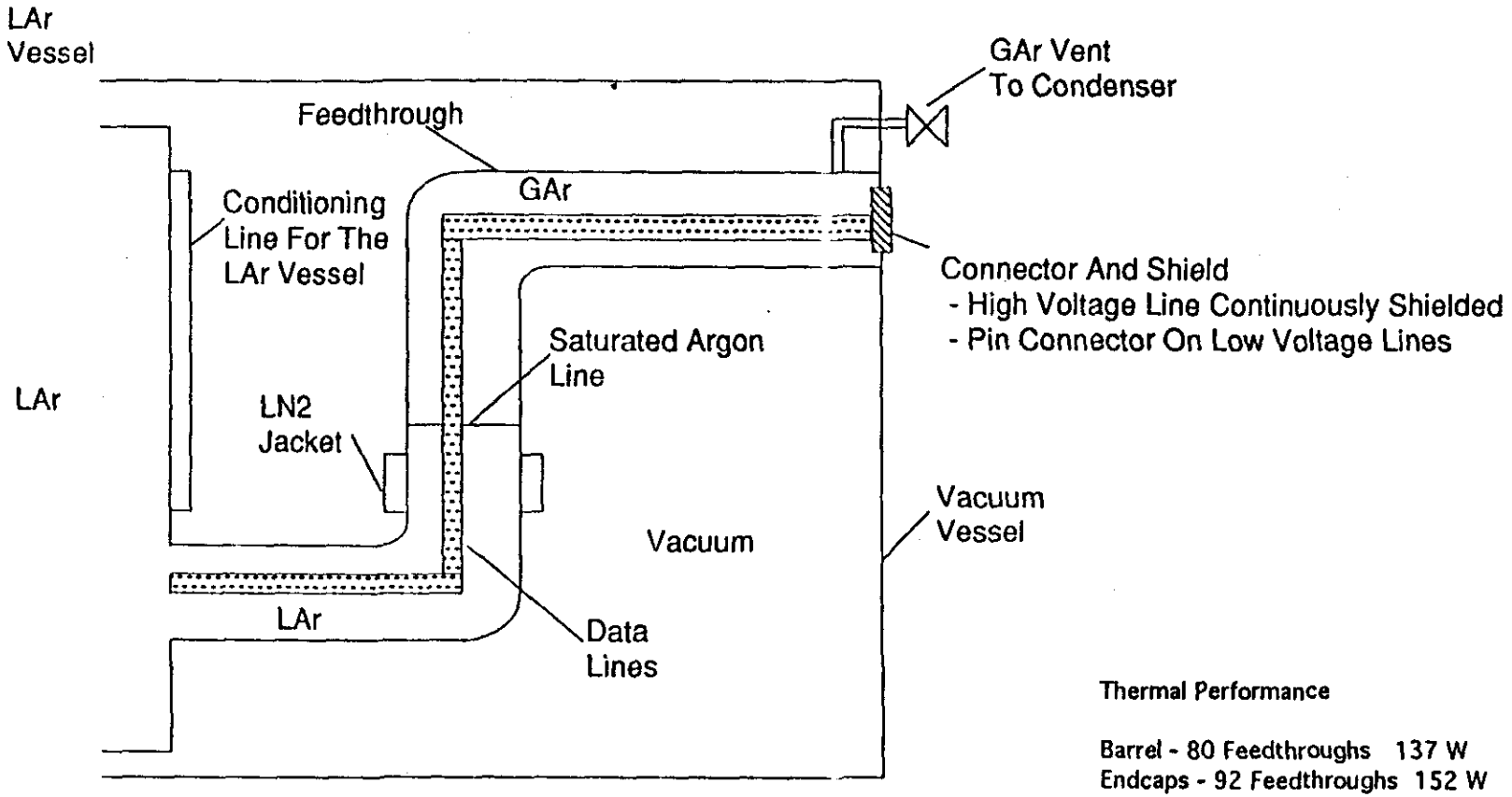

Thermal Performance

Barrel - 80 Feedthroughs 137 W
Endcaps - 92 Feedthroughs 152 W
Total of 289 W

* MLI External To The Calorimeter And Feedthrough
** Data Lines Can Be Stripline (continuous flat cable from inside the calorimeter to external electronics) or the standard wire bundles.

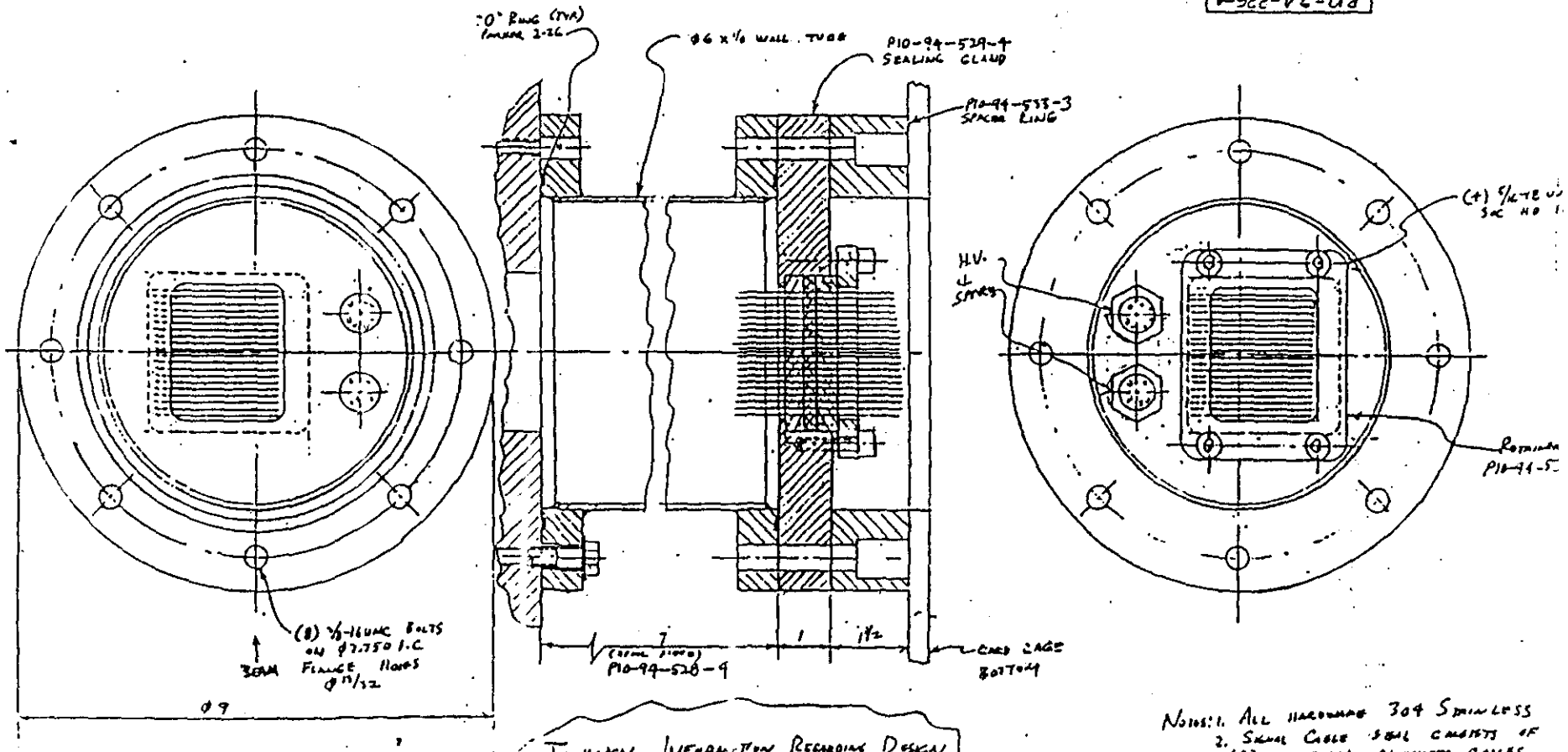

TECHNICAL INFORMATION REGARDING DESIGN		
	CERN DESIGN	ARGONNE DESIGN
CONE THICKNESS	1 cm (.394")	.375"
CONE SPAN	8.5 cm (3.346")	2.125"
RTV THICKNESS	6 cm (.236")	.250"
NUMBER OF BOLTS	16	4
CLAMPING FORCE	8320 LBS	3825
GLAND AREA	17.5 IN²	9 IN²
SQUEEZE	475 PSI	425 PSI

NOTES: 1. ALL HARDWARE 304 STAINLESS
2. SIGNAL CABLE SEAL CONSISTS OF (2) IDENTICAL ALUMINUM CONES WITH RTV SEAL IN BETWEEN. CLAMPING PROVIDED BY ALUMINUM RETAINER WITH (4) 5/16-18 BOLTS.
3. H.V. INSERT SEALED TO ALUMIN GLAND WITH LOC-TITE OR EQ ON THREADS.

				P10-94-210-
				BROOKHAVEN NATIONAL LAB
				UPTON, N. Y. 11973
				HELIOS-NAT
MAY 9, 1985	6061-T6	FULL		LEADS & EXTERNAL ELE
				FEED-THRU, E
J. KUMMER				P10-94 — 526

STRIP LINE CABLE

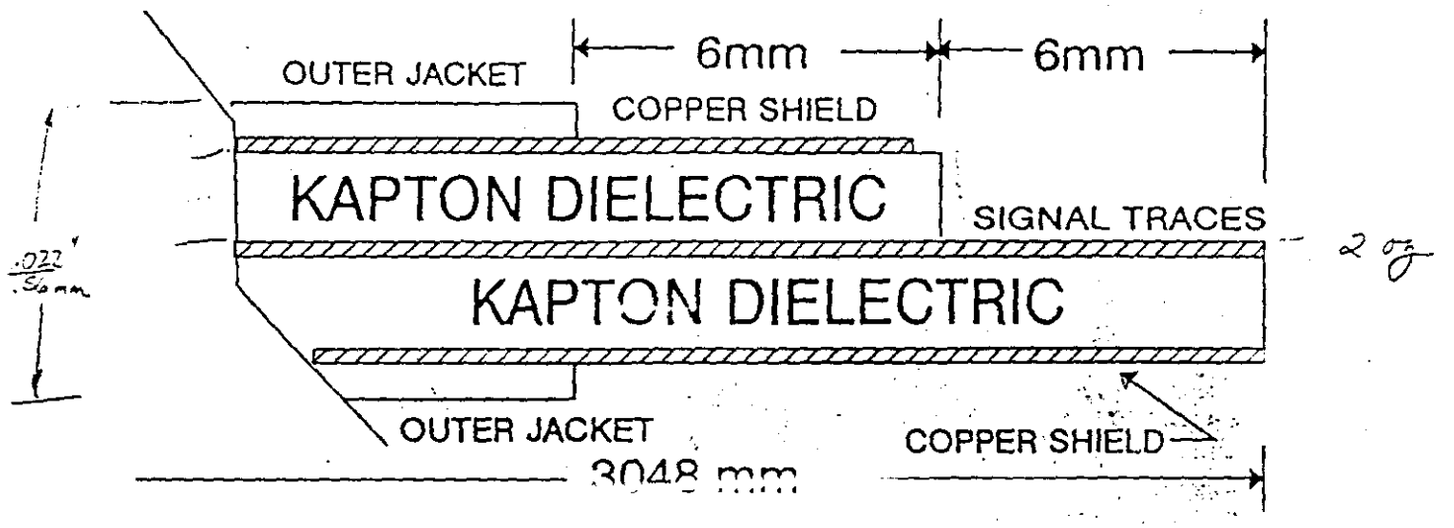

SPECIFICATIONS

DIELECTRIC: KAPTON / POLYESTER 1.34 mil/oz

DIELECTRIC ~~THICKNESS~~ Pullback: 6mm ≤ 1.44mm

Dielectric thickness 0.13mm ~ .005"

COPPER SHIELD: 1oz copper

SIGNAL TRACE (thickness): 2oz copper

SIGNAL TRACE (width): 0.254 mm

SIGNAL TRACE (pitch): 2.54mm

NUMBER OF TRACES: 25

OUTER JACKET: mylar 0.08mm

FEB 13 1992

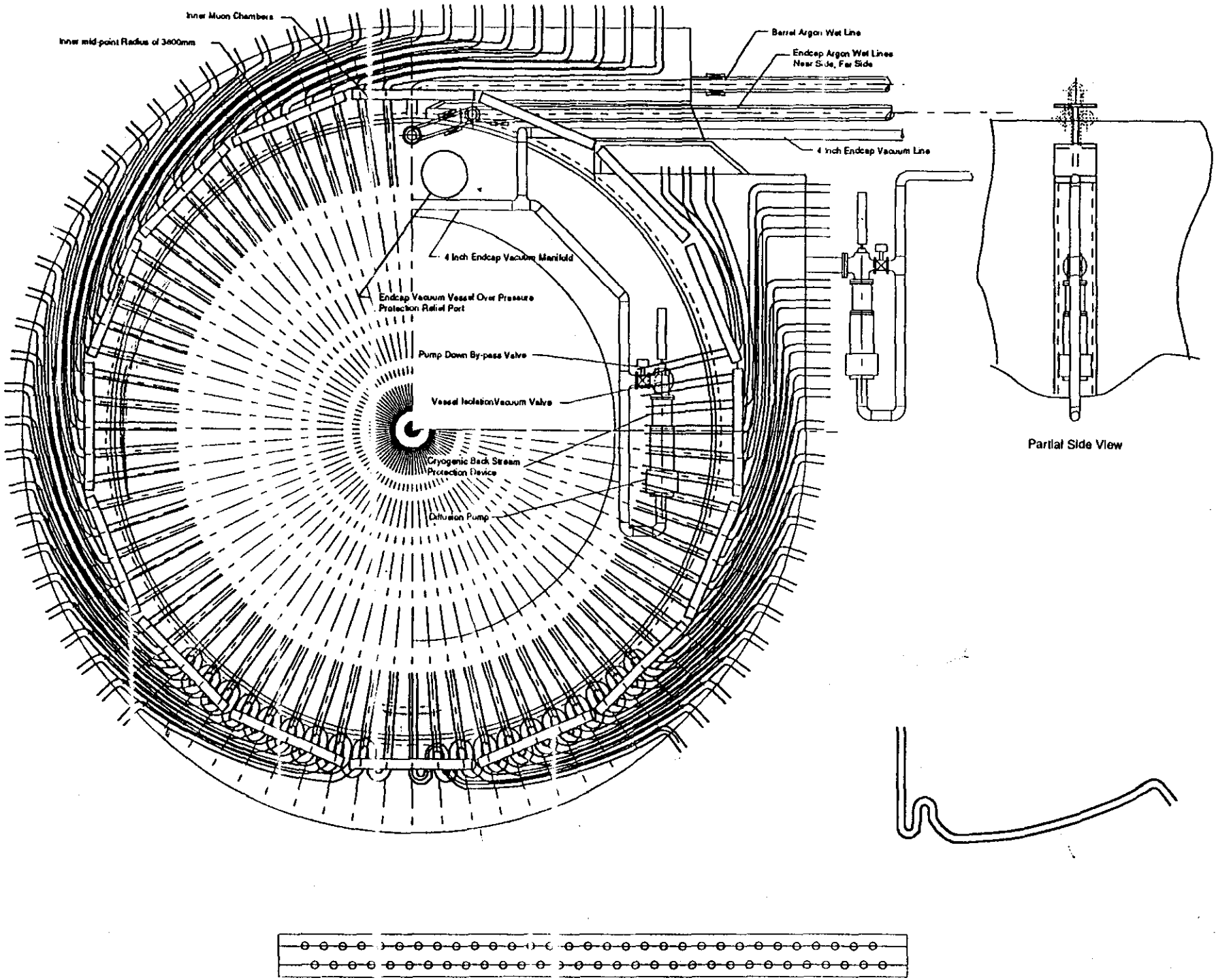
Inner Muon Chambers
Inner mid-point Radius of 3800mm
Barrel Argon Wet Line
Endcap Argon Wet Lines
Near Side, Far Side
4 Inch Endcap Vacuum Line
4 Inch Endcap Vacuum Manifold
Endcap Vacuum Vessel Over Pressure
Protection Relief Port
Pump Down By-pass Valve
Vessel IsolationVacuum Valve
Cryogenic Back Stream
Protection Device
Diffusion Pump
Partial Side View

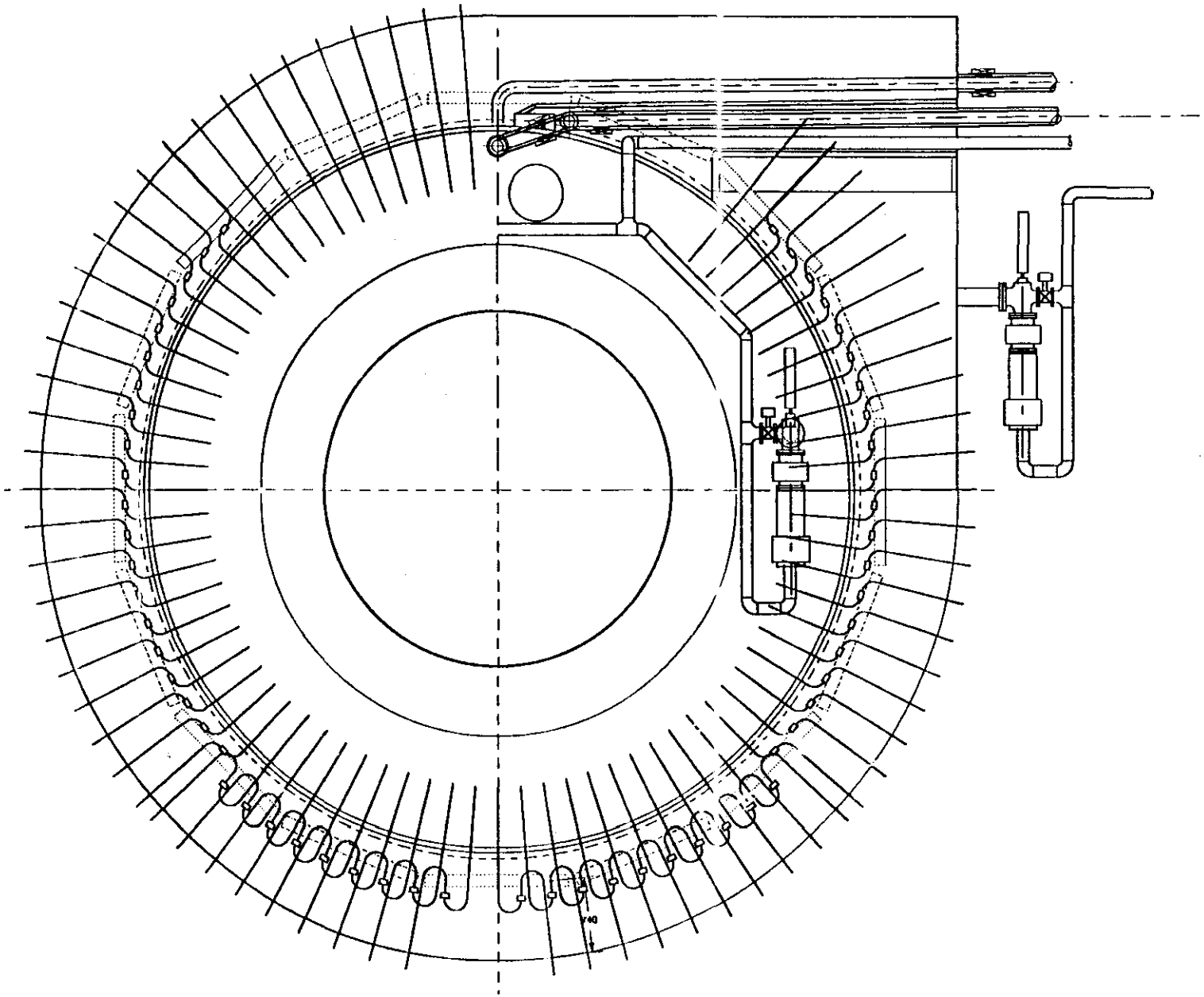

GEM Liquid Argon Calorimeter

Shows General Configuration with High Point Argon Piping

1/4 Section "Vertical"
Copper Hadron Absorber

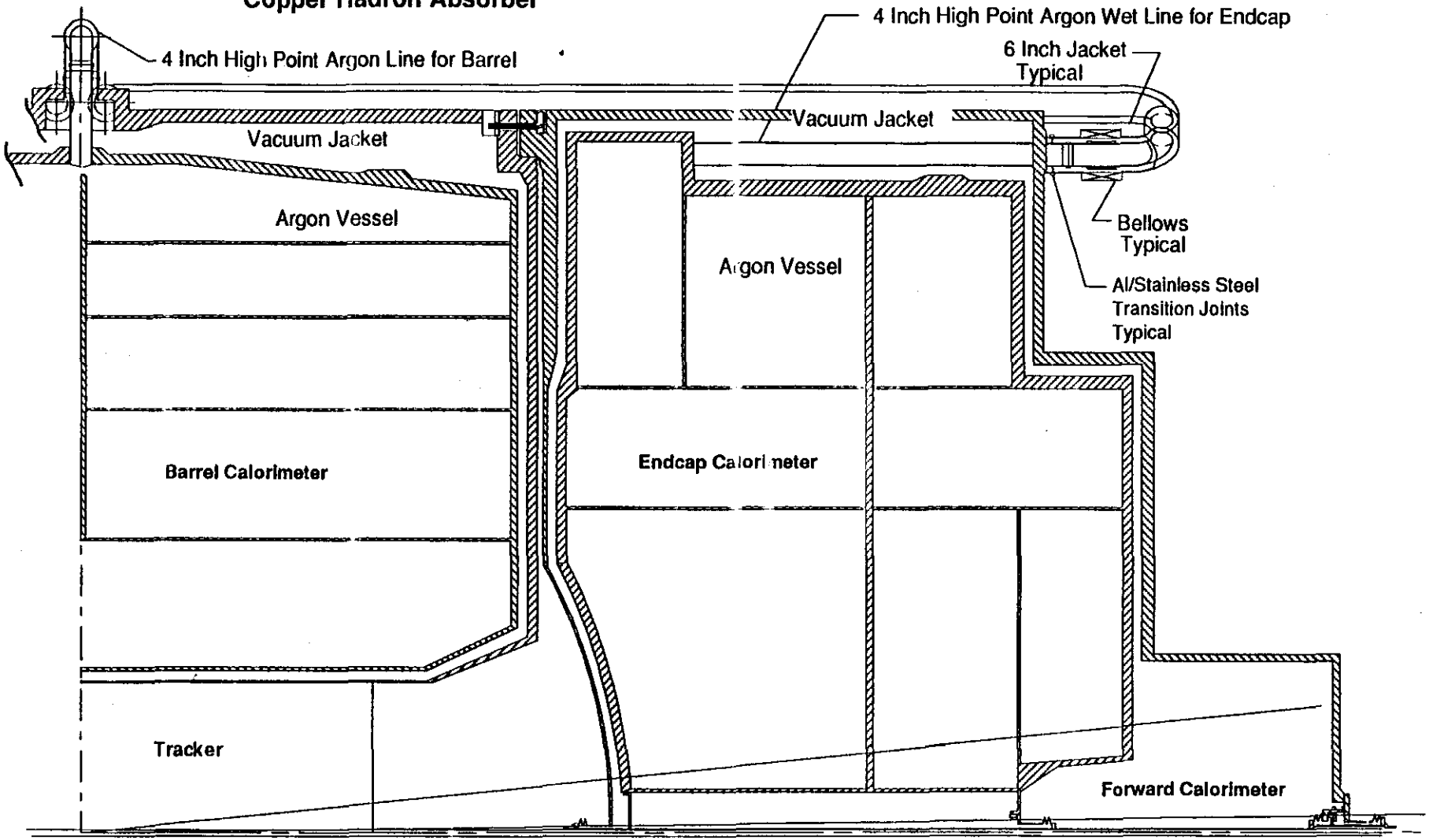

LLMason GEMLAC.E &Piping 4/17/92

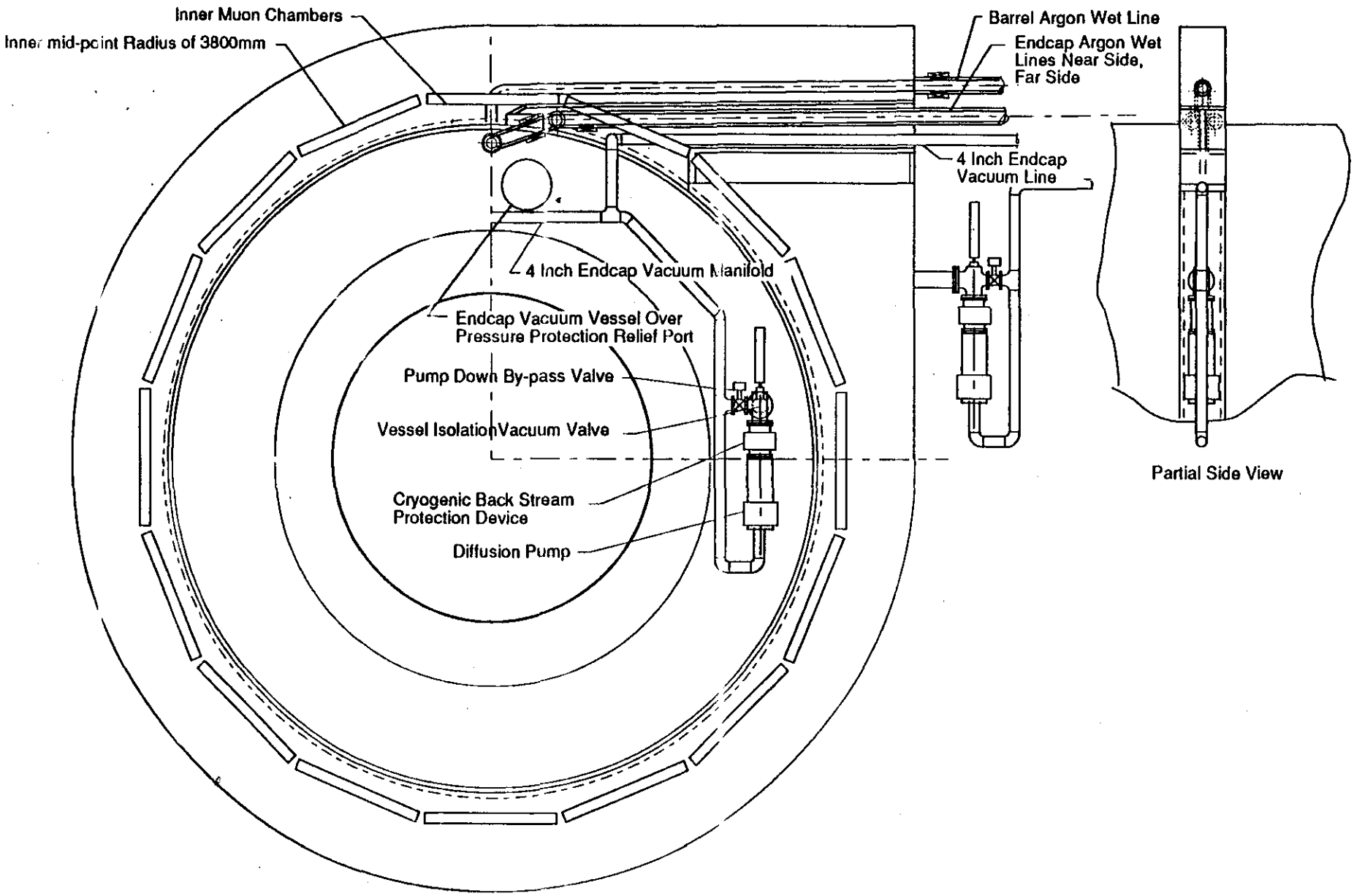

Endcap Calorimeter End View Showing Vacuum System and Argon Wet Line to Head Vessel

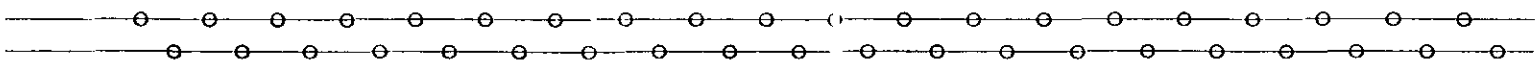

Spacing for Electronic Feed Throughs Penetrating the Barrel Vacuum Vessel, 40 Shown, 80 Required

LLMason GEMLAC.E & Piping 4/17/92

Vacuum System - LAr Chambers

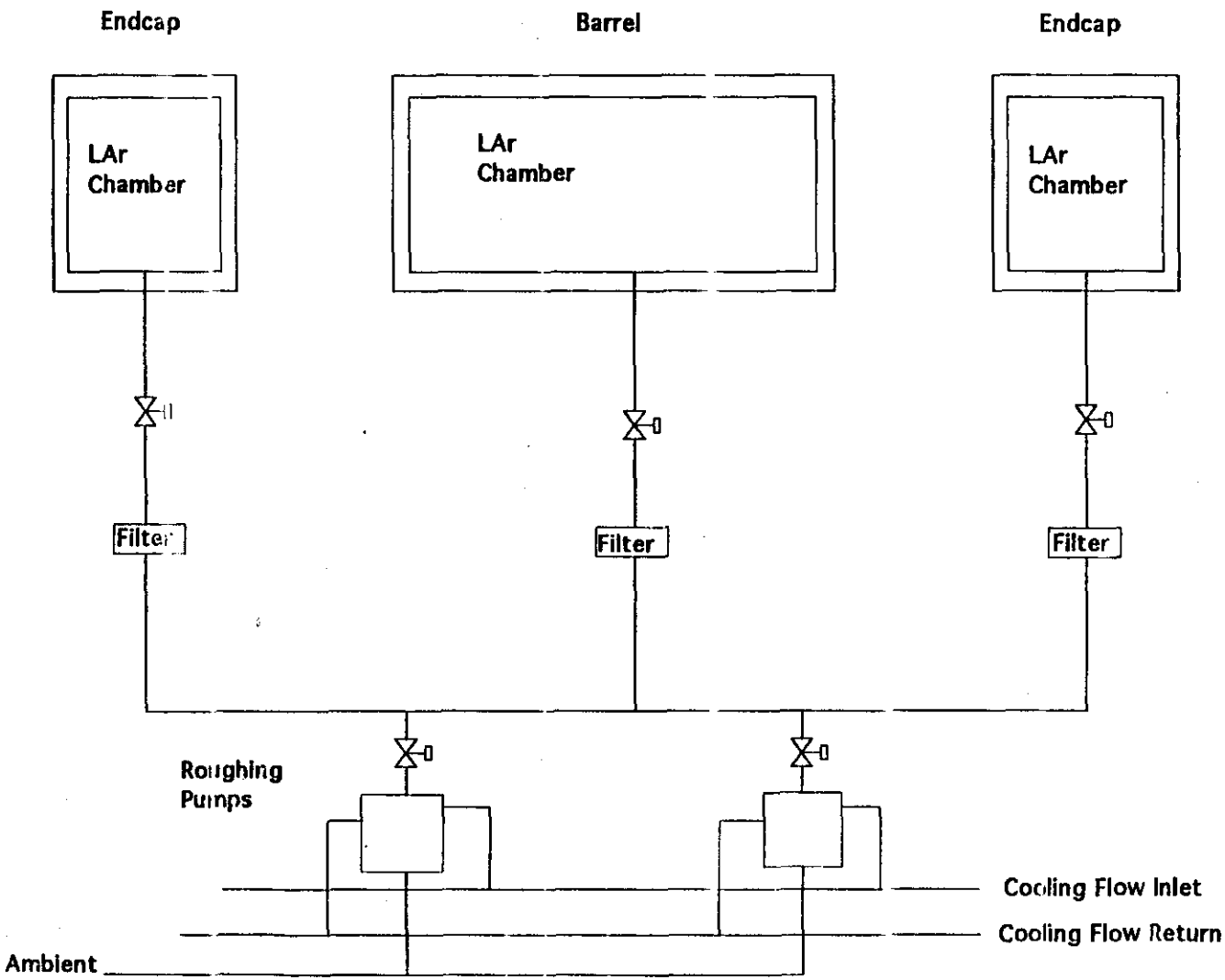

Vacuum System - Vacuum Vessels

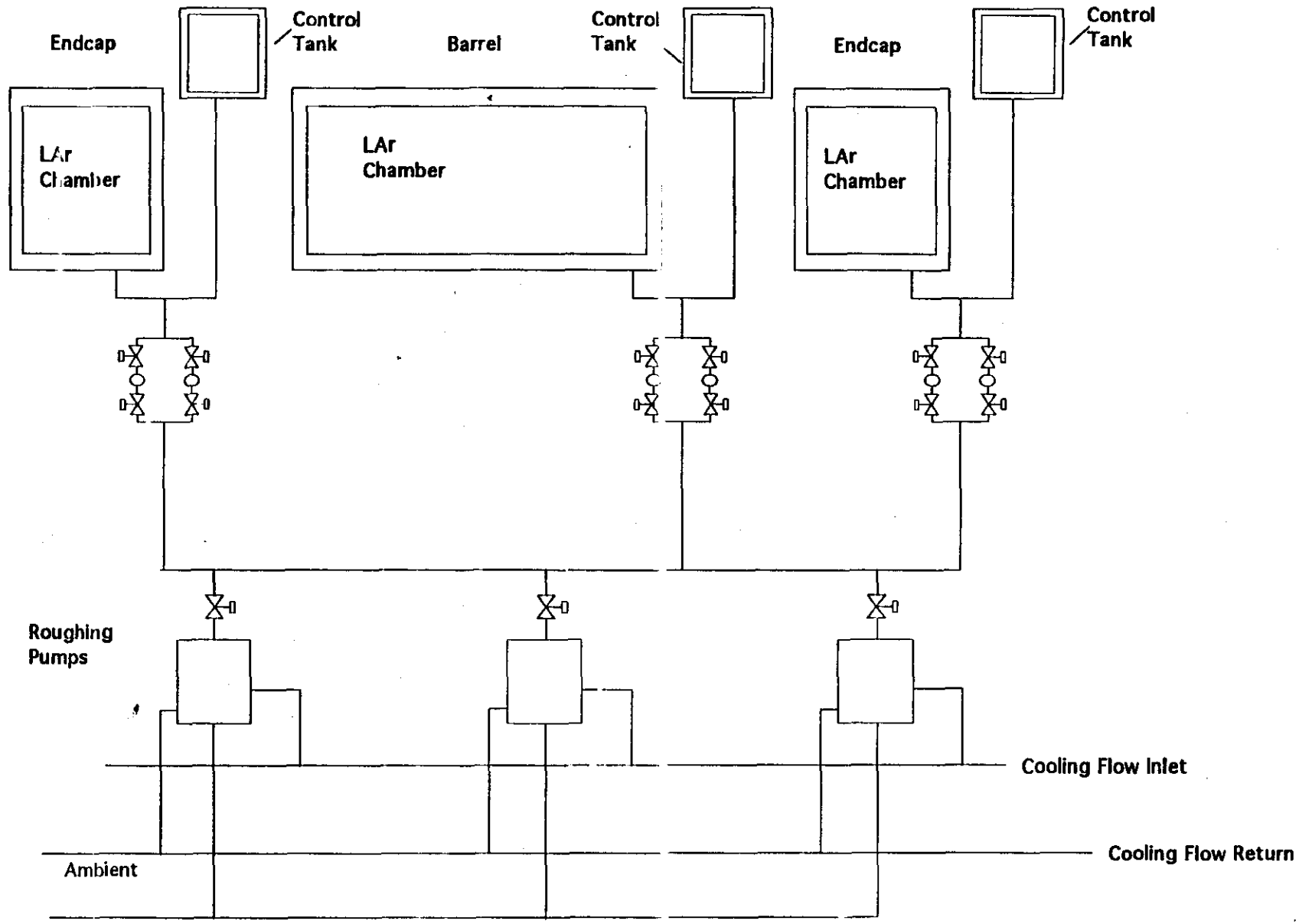

Study of Cryogenic Systems for GEM Surface and Hall Facilities

(Very Preliminary)

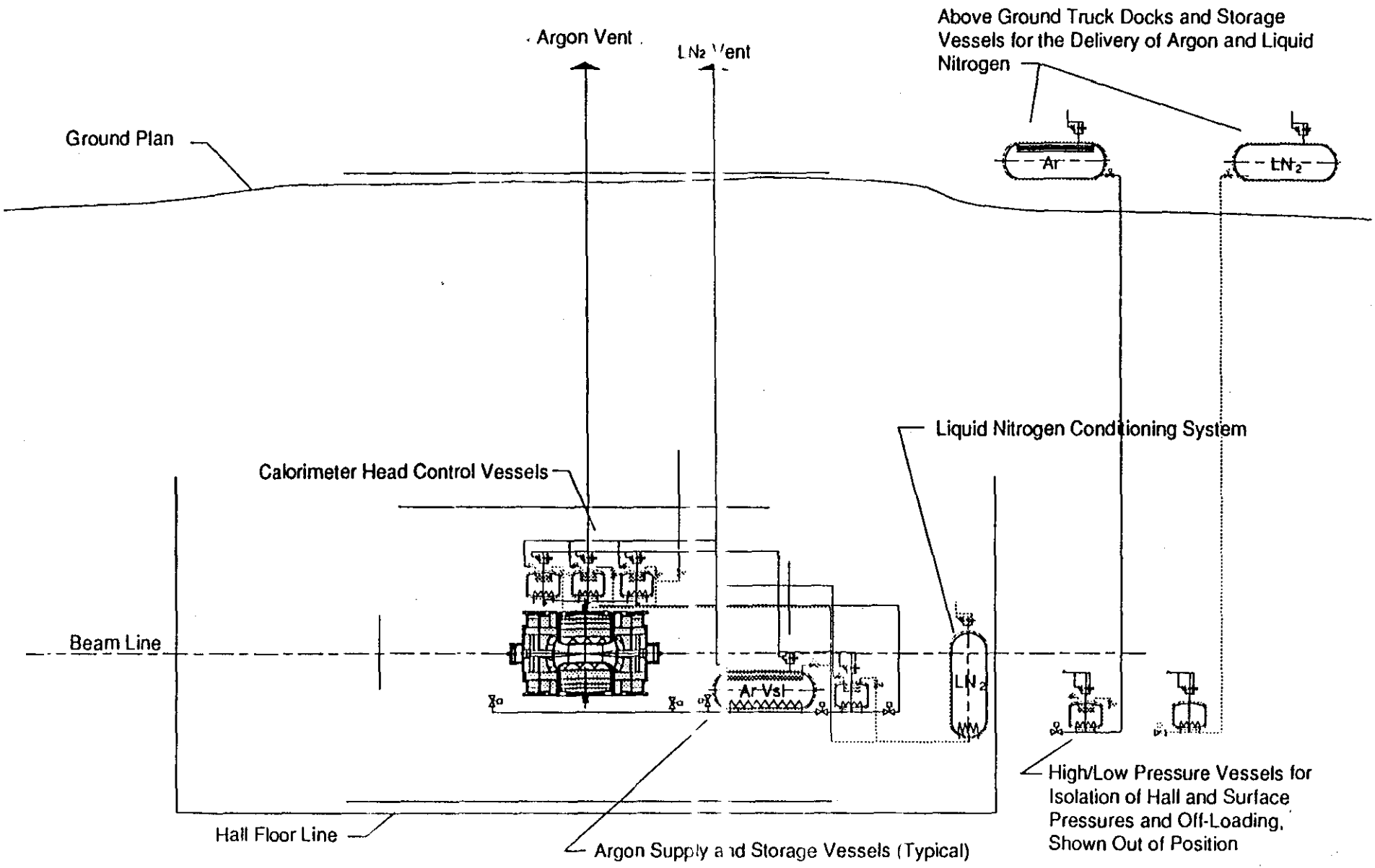

LLMason GEMLAC.Cryo_System 4/19/92

GEM Liquid Argon Calorimeter

1/4 Section "Vertical Section"

Barrel Argon Vessel and Calorimetry Wt. = 743 MT
Endcap Argon Vessel and Calorimetry Wt. = 497 MT ea.

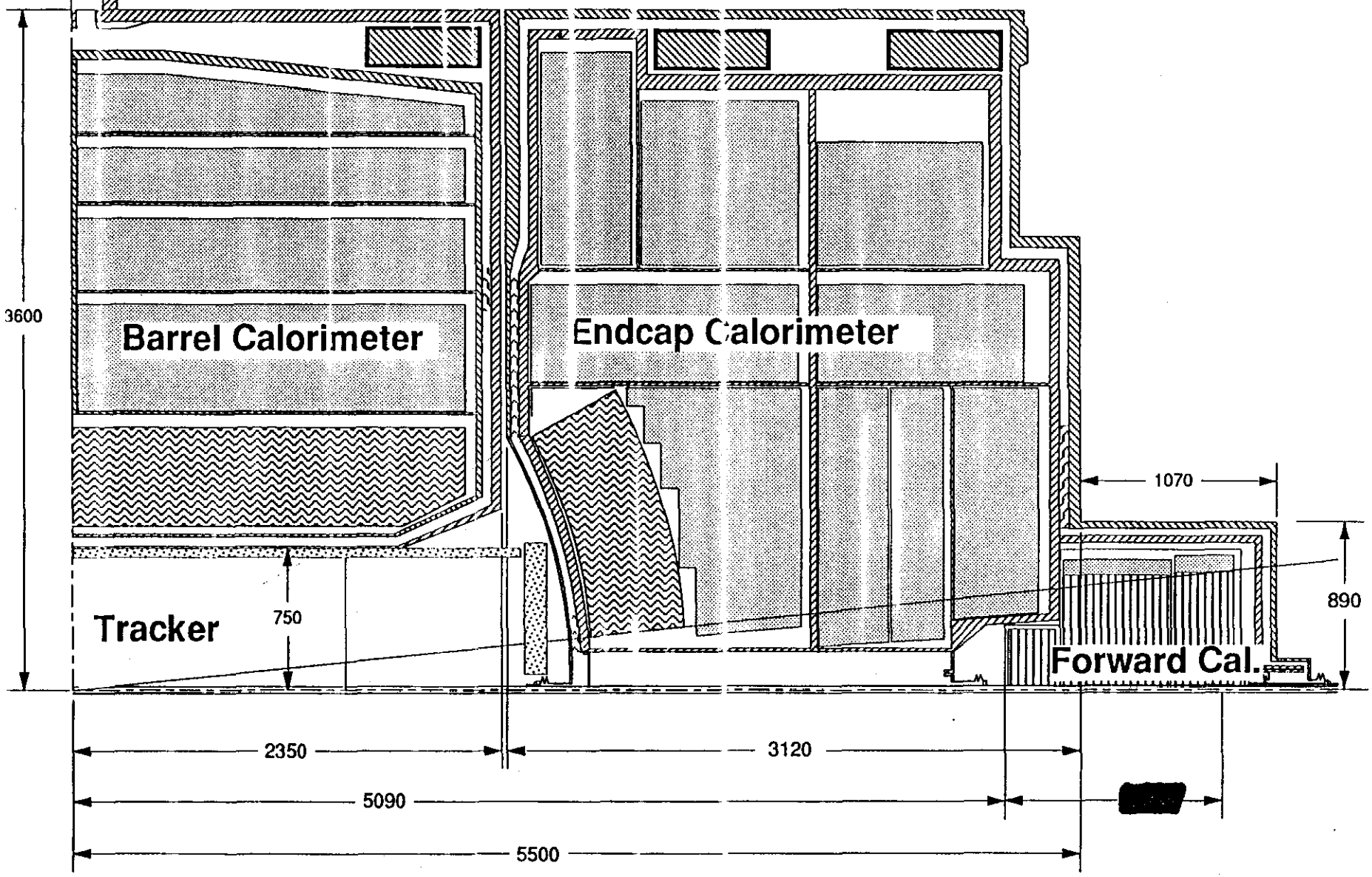

LLMason GEMLAC.Supports4/17/92

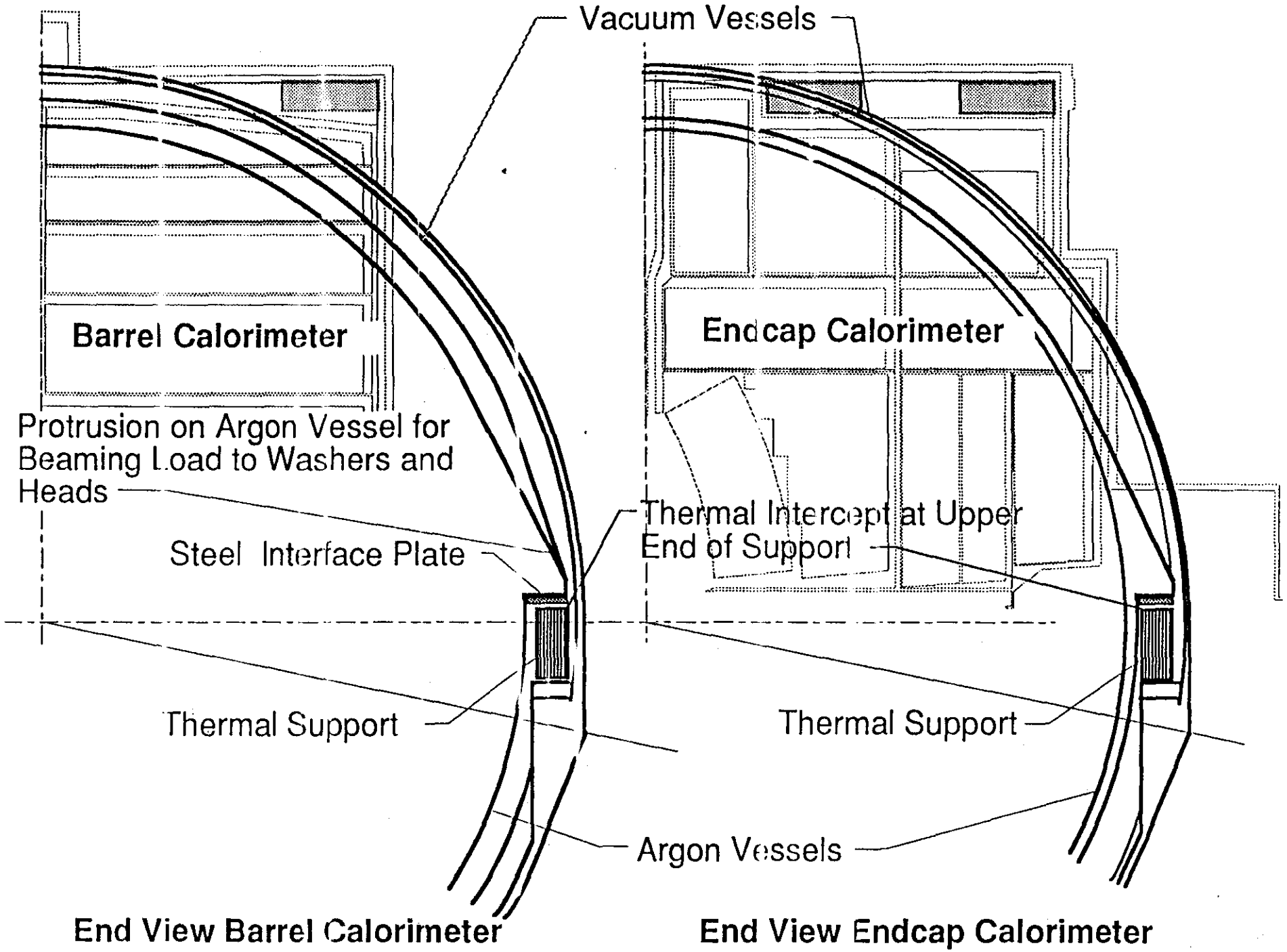
Vacuum Vessels
Barrel Calorimeter
Endcap Calorimeter
Protrusion on Argon Vessel for Beaming Load to Washers and Heads
Steel Interface Plate
Thermal Intercept at Upper End of Support
Thermal Support
Thermal Support
Argon Vessels
End View Barrel Calorimeter
End View Endcap Calorimeter

Supports

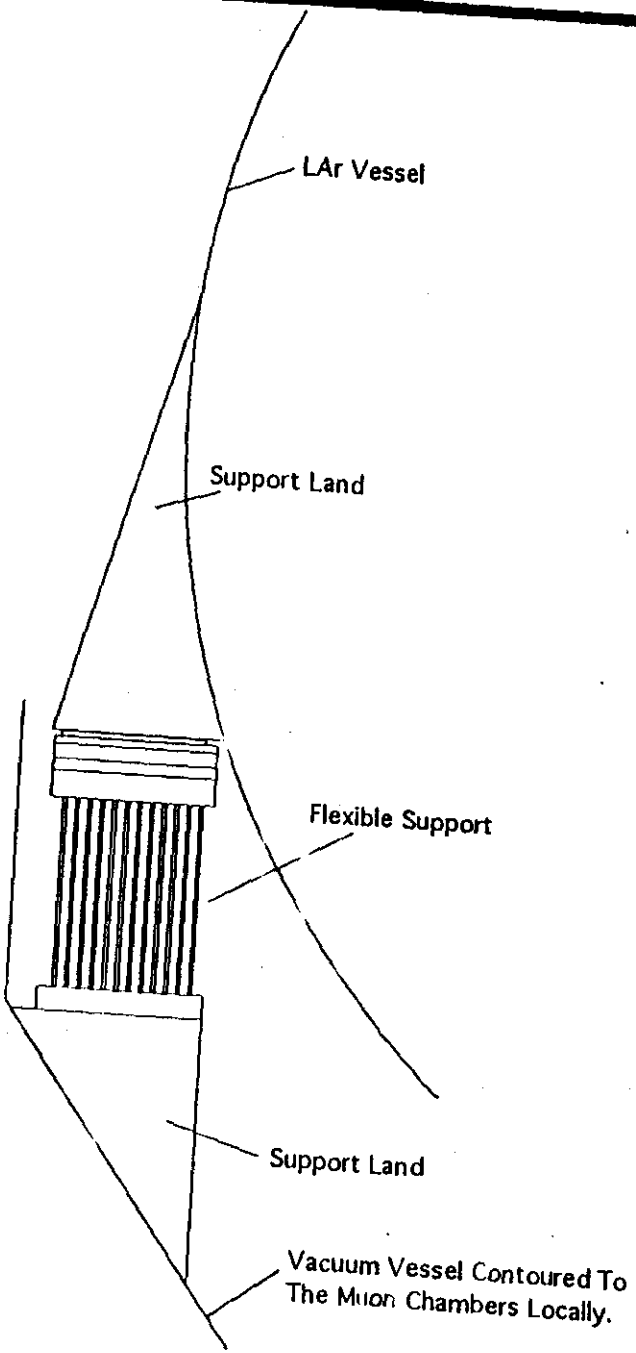

Structural Characteristics

- o Deflection of +/- 0.3" Towards Interaction Point
- o Design Load Of The Barrel Support of 337 MT
- o Design Load Of The Endcap Support Is TBD
- o Heat Intercept
  - Stainless Steel Or Aluminum
  - Cooling Tubes Integral
  - LN2 Cooling Is Baseline
  - 0.5" Cooling Tubes Leaves Greater Than The Necessary 60 in2 To Carry Load

Thermal Characteristics

Barrel - 4 x 155 = 620 W
Endcaps - 8x 155 =1240 W
Total = 1860 W

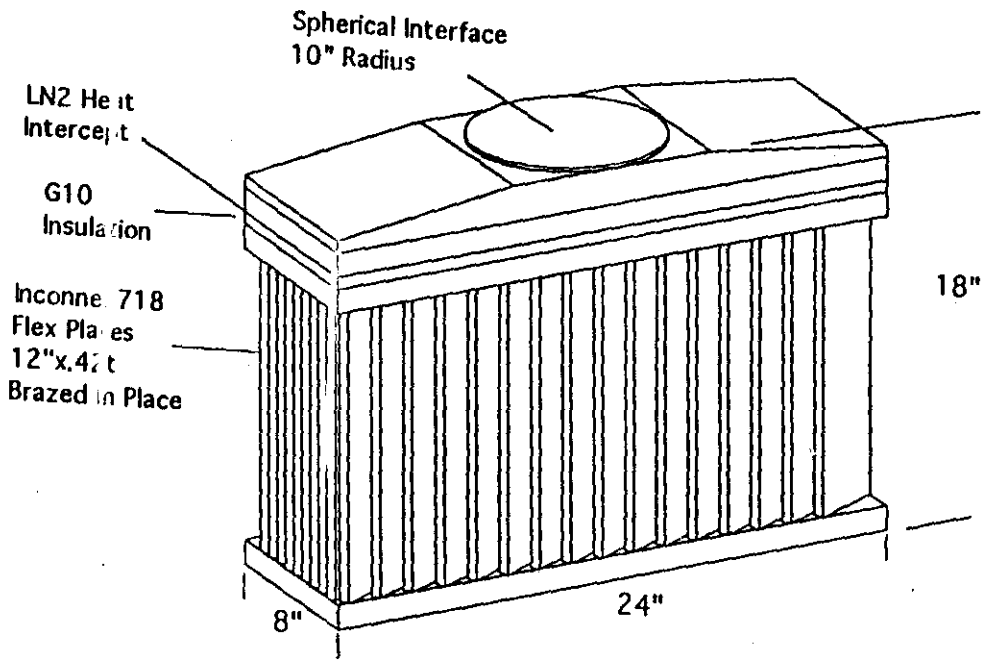

Summary

- Requirements and Engineering Parameters Definitized
- Interface Constraints Identified and Accepted
- Module Structures Developed
  -- Endcap EM Being Finalized
- Electronics Heat Removal
  -- Baseline: Thermal Siphon Using Internal Argon Cooling
- Vessels Defined and Sized
- Feedthroughs, Vacuum and Cryogenic Systems Defined
- Support System and Assembly Scenario Defined

gem

γeμ

Presentation by:

J. Coulon

GEM Liquid Argon Calorimeter (LAC) Cost Presentation April 22, 1992

GEM Cost Review Meeting

J. Coulon

MARTIN MARIETTA

Science Systems

Agenda

- Configuration
- Parameters
- Cost Model
- Ground Rules and Assumptions
- LAC Cost Summary
- WBS Summary
  - Dollars
  - Hours
- Engineering Summary
  - Methodology
  - Example
- Modules Summary
  - Hadronic
    - Procurement Example
    - Assembly Methodology and Example
  - EM
    - Procurement Example
    - Assembly Example

Agenda (Continued)

- Cryostat Summary
  - Procurement Example
  - Assembly Methodology and Example
- Calorimeter Assembly Summary
  - Example
- Tooling/Fixtures Summary
  - Procurement
- Test Equipment Summary
- Transportation Summary
- Cryogenic System Summary
- Facilities Summary
- Test Beam Program Summary
- Installation/Test Summary
  - Example
- Subsystem Management & Integration
- Schedule
- LAC Cost Table
- LAC Contingency Table

Configuration

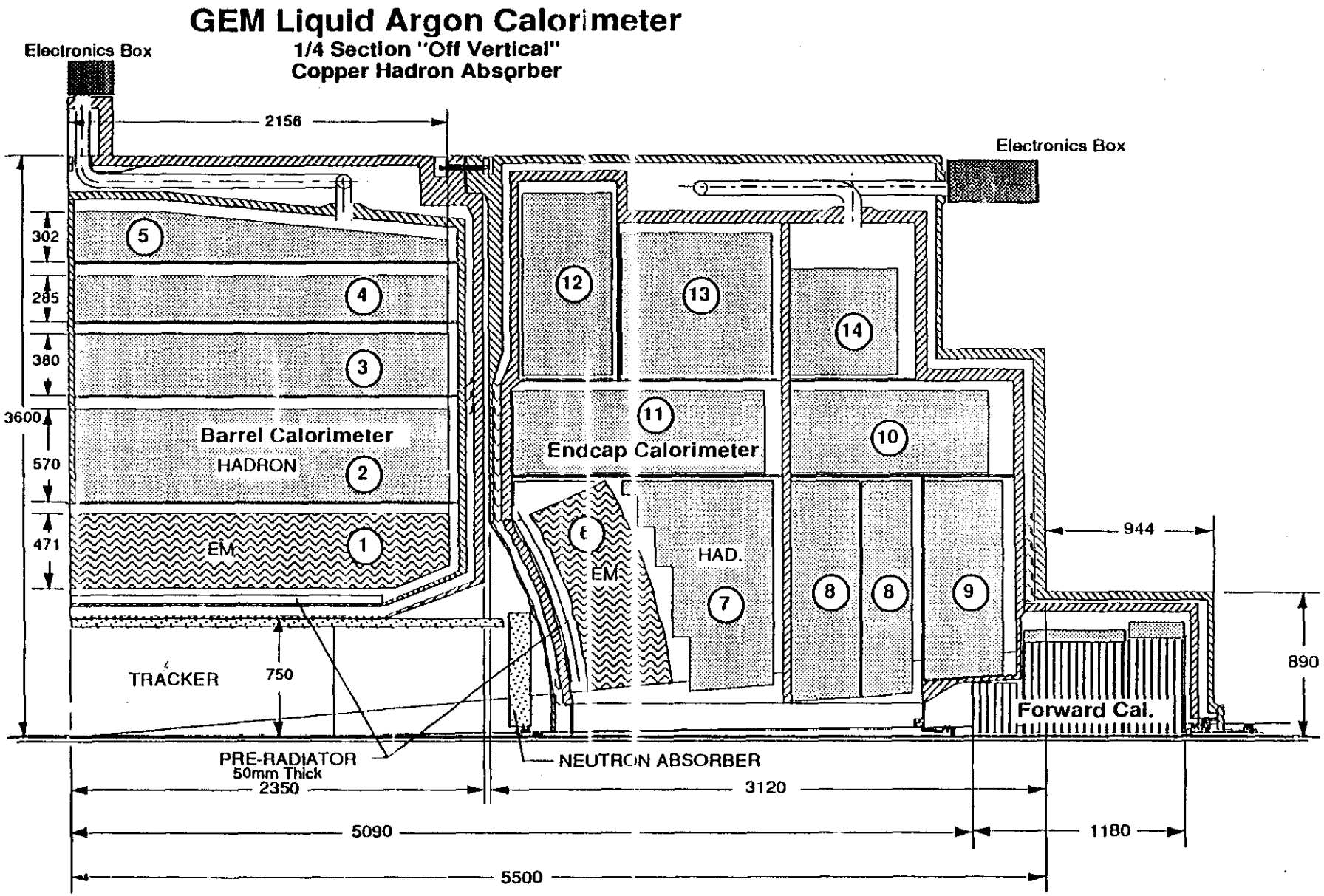

LLMason GEMLAC.4/10/92

4/21/92

Parameters (Overall)

	EM	Fine Hadronic	Veto Hadronic	Total
Absorber	Pb/SS	Cu	Cu	
Absorber plate thickness (mm)	1.3/.4 mm	9 mm	16 mm	
Cell thickness (mm)	6.18 mm	95.04 mm	151.04 mm	
Segmentation	$\Delta\eta x \Delta\varphi$	$\Delta\eta x \Delta\varphi$	$\Delta\eta x \Delta\varphi$	
	.032x.032	.08x.08	.08x.08	
No. of channels	60,600	20,640	5,920	87,160

	Barrel	Endcaps	Total
Weight (MT)	783	520 (Each)	1823

4/21/92

Parameters (Modules)

Module	Type	Plates	Quantity	Weight	#Layers/ Module
1	Barrel EM Accordion	z	40	1.57 MT	20
2	Barrel Fine Hadronic	z	80	2.38 MT	48
3	Barrel Fine Hadronic	z	80	2.09 MT	32
4	Barrel Fine Hadronic	z	80	1.84 MT	24
5	Barrel Coarse Hadronic	z	80	1.74 MT	16
6	End EM Accordion	Projective	2	14.4 MT	210
7	End Fine Hadronic	Vertical	20	3.61 MT	56
8	End Fine Hadronic	Vertical	20	3.72 MT	48
9	End Coarse Hadronic	Vertical	20	2.71 MT	32
10	End Fine/Coarse Had.	Vertical	40	2.64 MT	82
11	End Fine Hadronic	Vertical	40	3.22 MT	124
12	End Fine/Coarse Had.	z	80	1.76 MT	77
13	End Fine/Coarse Had.	z	40	4.46 MT	60
14	End Coarse Hadronic	Vertical	40	2.40 MT	34

Cost Model

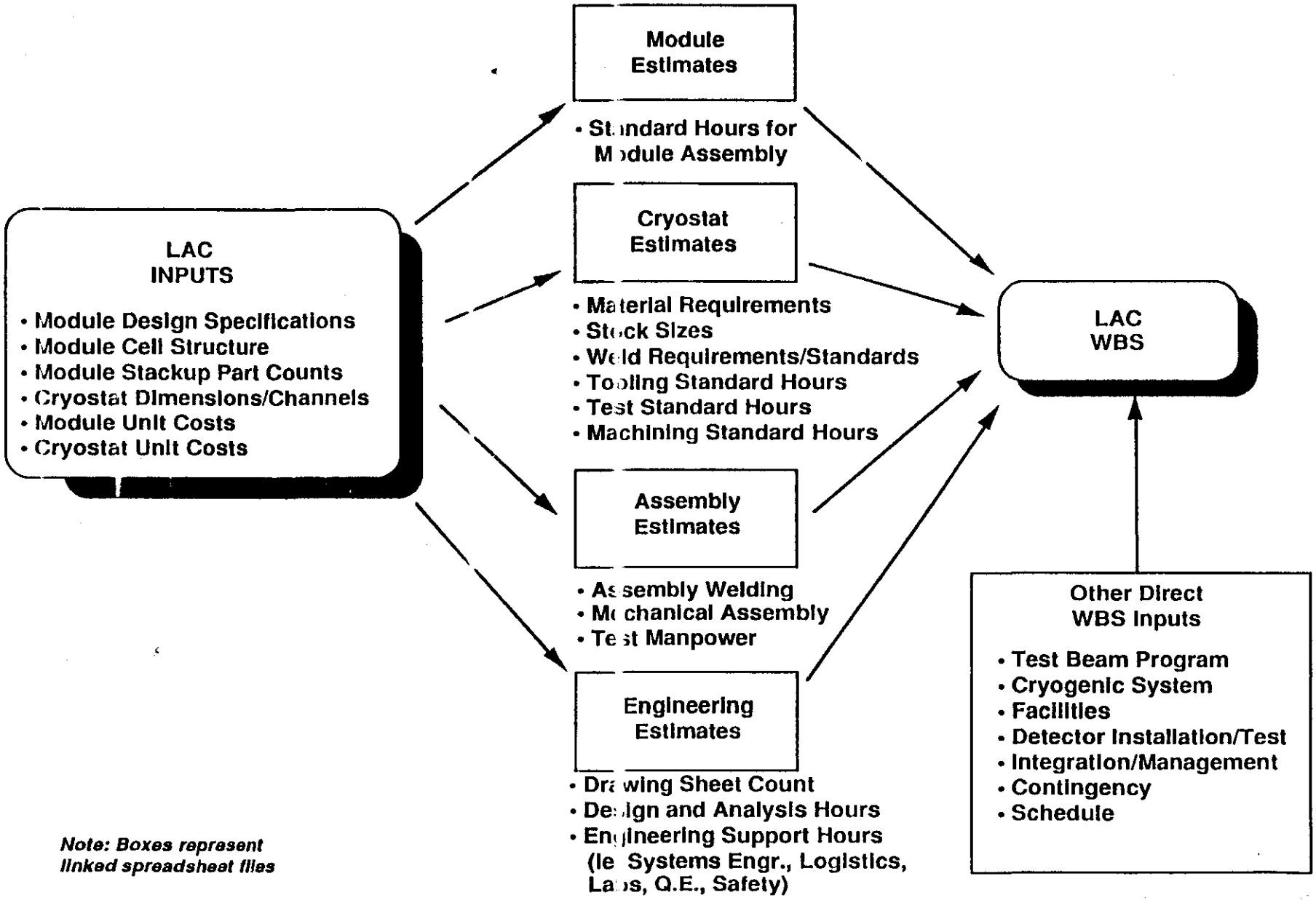

Note: Boxes represent linked spreadsheet files

4/21/92

Ground Rules and Assumptions

1. All costs are reported in 1991 thousands of dollars
2. Estimates include engineering, materials and supplies, design, inspection, administration, procurement, fabrication, assembly, and installation of the GEM Liquid Argon Calorimeter.
3. The following methods were used to develop the cost estimates:
   - bottoms-up utilizing industrial engineering and manufacturing analyses
   - parametrics and factors
   - historical detector costs
   - vendor estimates
   - engineering judgement
4. To facilitate the cost estimating process, cost spreadsheets were developed for the modules, cryostat, engineering and assembly, then linked to the LAC WBS. For elements of the LAC which result in the largest percentage of the total cost, bottoms-up cost estimates were derived to the lowest level dictated by the maturity of the design.
5. Contingency analysis follows the GEM approach outlined in the GEM Cost Estimating Plan Revision C. Contingencies have been applied to each WBS element based on the maturity of the design, technology considerations, estimating technique, schedule criticality, and material and labor cost implications.

Ground Rules and Assumptions (Continued)

6. Using the WBS, the subsystems were broken down into individual components. Information from the engineering designs; such as weights, materials, specifications, tolerances, dimensions, quantities, were used for developing engineering and material requirements. This information was also used for obtaining material estimates from vendors. Other information generated included manufacturing processes and labor/machine requirements for designing and building the LAC.

7. Computer aided engineering was assumed to be used extensively, resulting in a cost savings over past engineering practices. These savings were factored into the estimate by reducing the hours per drawing required. An example of these savings can be seen in the design of the modules. A module consists of many layers of absorber plates and sensing boards. A drawing could be developed for just one layer and a computer program written to generate drawings for additional projective modules.

8. The cost estimates are based on the baseline design configuration presented by the MMC engineering team.

9. The Installation column of the WBS includes all the activity that will occur below ground.

10. Research and Development of the LAC was estimated as 11% of the construction costs.

11. Conceptual/Preliminary Design was a bottoms-up estimate provided by the engineering group.

Ground Rules and Assumptions (Continued)

12. The Engineering/Design and Inspection/Administration estimates were developed using a combination of bottoms-up estimates, Cost Estimating Relationships (CER's), and factors. The CER's were developed from historical data for DOD/DOE programs with similar requirements and engineering tasks. (The CER estimating approach minimizes the use of "engineering judgement" which is often used during a conceptual stage of a program).

13. The following engineering functions are included in the Engineering/Design category:

    Design Engineering - includes mechanical and electrical design effort for the design documentation, drawing development, and design maintenance and support effort. Hours are developed from the number of drawings required to accompolish the task (drawing counts).

    Design Analysis - includes hours to perform stress, dymanics, thermal, and mechanical analyses. Analysis is a direct function of the design engineering performed.

    Engineering Support - includes effort for materials engineering, computer aided engineering, and checking and release.

    Test Engineering - includes the effort associated with test requirements, development of detailed test plans/procedures, test conduct, and test operations.

    Systems Engineering - includes reliability, radiation hardness, requirements, systems integration, and configuration control.

Ground Rules and Assumptions (Continued)

Logistics - includes logistics engineering, integration and support, spares, maintainability, and transportation planning.

Engineering Administration - effort involved in developing and maintaining engineering plans at the job unit level that integrate with manufacturing and project schedules.

Engineering Labs - includes mechanical, power, thermal, and test operations for engineering prototypes and development labs, electronics labs, and parts evaluation labs to support engineering.

Quality Engineering - includes engineering effort for fabrication, packaging and shipping.

Sustaining Engineering - effort required during the production phase of the program to process change orders and provide technical expertise during manufacturing and assembly.

14. Inspection/Administration is the inspection "touch" effort. It includes receiving inspection, touch inspection, factory quality control labs, factory quality control support, procurement inspection, and quality control pack and ship. Quality inspection is typically 25% of the touch effort for programs of this size and complexity.

15. The labor estimates were developed largely from detailed manufacturing estimates using industrial fabrication processes for the cryostat and laboratory processes for the modules (applying laboratory labor rates to

Ground Rules and Assumptions (Continued)

the cryostat is not realistic without increasing the labor hour estimates due to the large industrial automation assumed for fabrication).

16. Manufacturing plans were used for outlining the tasks for fabrication and assembly of the cryostat and modules. Industrial engineers developed the machine and labor hours required for each task.

17. The manufacturing estimates also include manufacturing support (factory and test effort which is non-touch labor) such as manufacturing/industrial engineering, material control, factory supervision, tool control, and pack and ship. Manfacturing support is factored from the touch fabrication and test effort. The factor used is based on similar historical programs which use high production runs (as for module construction) and for one-time assemblies (as for the cryostat and final calorimeter assembly). These factors are typically 75% of the touch labor for large production runs and 130% of touch labor for one-time large builds (75% was used).

18. Aluminum sheets for the manufacturing of the cryostat were assumed to be obtained in optimum stock sizes to minimize cutting, machining, and welding.

19. Labor estimates were developed using industry, university, and national laboratory labor rates as outlined in the GEM Cost Estimating Plan Revision C. National lab rates were used for all module effort, industrial (national average) labor rates were used for all off-site assembly, and SSCL labor rates were used for on-site assembly. The rates were computed as follows:

Ground Rules and Assumptions (Continued)

$/Manyear

Skill Mix	Qty	Rate ($k)	Total Rate ($k)	Composite Rate ($k)	Skill Mix	Qty	Rate ($k)	Total Rate ($k)	Composite Rate ($k)
National Laboratory:					National Average:				
Engr/Design:				119.14	*Engr/Design:*				112.21
Designer	3	93	279		Designer	3	97	290	
Engr/Phy	3	154	462		Engr/Phy	3	133	399	
Coordin	1	93	93		Coordin	1	97	97	
Inspec/Admin:				86.83	*Inspec/Admin:*				90.54
Secretary	1	62	62		Secretary	1	64	64	
Senior Technician	1	103	103		Senior Technician	1	107	107	
Junior Technician	1	77	77		Junior Technician	1	82	82	
Coordin/Admin	3	93	279		Coordin/Admin	3	97	290	
Instal/Assy:				88.33	*Instal/Assy:*				92.77
Junior Technician	3	77	231		Junior Technician	3	82	246	
Senior Technician	2	103	206		Senior Technician	2	107	214	
Coordin/Admin	1	93	93		Coordin/Admin	1	97	97	
SSC Lab:									
Engr/Design:				64.85					
Designer	3	57	170						
Engr/Phy	3	78	234						
Coordin	1	50	50						
Inspec/Admin:				44.33					
Secretary	1	29	29						
Senior Technician	1	50	50						
Junior Technician	1	37	37						
Coordin/Admin	3	50	150						
Instal/Assy:				43.50					
Junior Technician	3	37	111						
Senior Technician	2	50	100						
Coordin/Admin	1	50	50						

Ground Rules and Assumptions (Continued)

20. Materials and Supplies (M&S) was calculated as 4% of the total labor estimate.

LAC Cost Summary

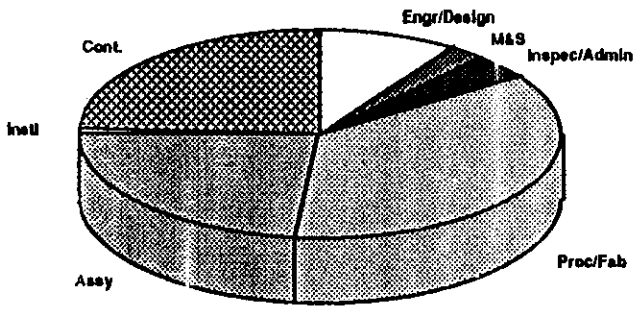

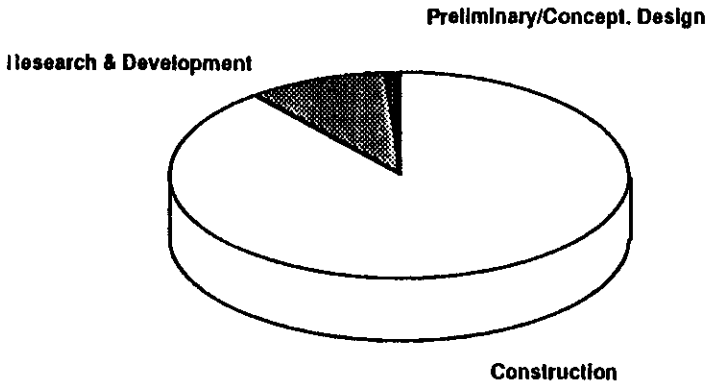

	$K
Engr/Design	12,357
M&S	2,614
Inspec/Admin	5,074
Proc/Fab	54,019 ~~46,147~~
Assy	29,777
Instl	852
Cont.	32,027 ~~30,847~~
WBS Total*	136,719 ~~127,668~~

*Includes R&D and Concept/Prelim Design

	$K	
Construction	~~113,866~~	122,02
Research & Development	~~12,525~~	13,427
Preliminary/Concept. Design	1,276	
WBS Total	~~127,668~~	136,7

LAC Pareto Analysis (Construction Only)

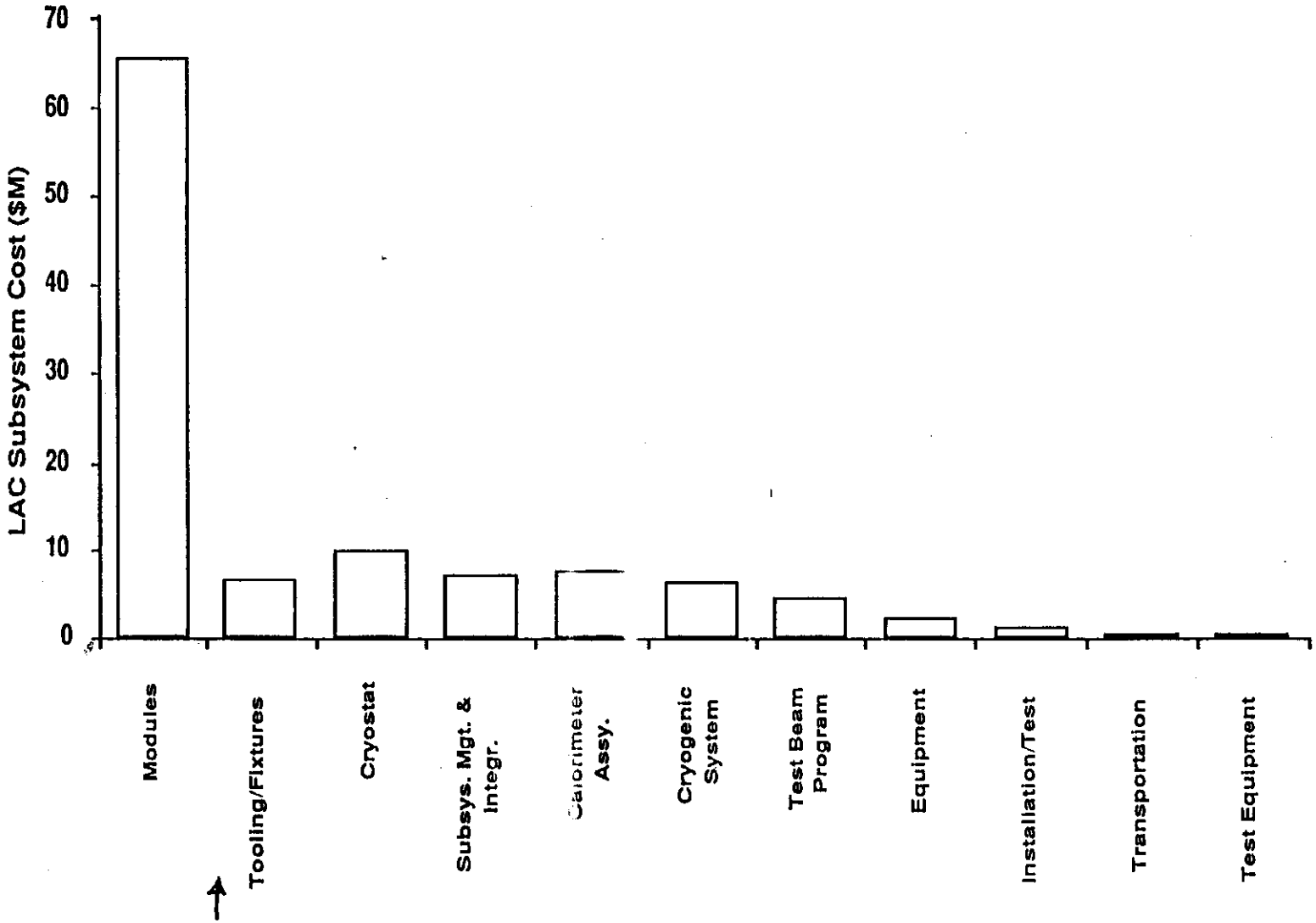

ELECTRONICS = ~ $17 m

4/21/92

	Engr/ Design ($k)	M&S ($k)	Inspec/ Admin ($k)	Proc/ Fab ($k)	Assy ($k)	Instl ($k)	Cont. ($k)	WBS Total ($k)
LAr Calorimeter:	12,357	2,614	5,074	54,019	29,777	852	32,027	136,719
Research & Devel.	1,127	255	503	5,353	2,951	84	3,149	13,422
Concep./Prelim. Design	982	39	0	0	0	0	255	1,276
Construction	10,248	2,320	4,571	48,665	26,826	767	28,623	122,021
Modules	2,985	914	2,446	17,668	17,417	0	15,431	56,860
Barrel EM	203	92	259	3,954	1,847	0	3,106	9,461
Barrel Hadronic	850	278	752	4,857	5,352	0	4,033	16,122
Endcap EM	203	42	106	2,879	752	0	1,980	5,961
Endcap Hadronic	1,729	501	1,329	5,978	9,467	0	6,312	25,316
Cryostat	1,642	179	346	3,468	2,484	0	1,906	10,024
Barrel Argon Vessel	464	40	64	534	461	0	344	1,907
Barrel Vacuum Vessel	119	23	56	222	401	0	181	1,002
Endcap Argon Vessel	399	42	80	436	573	0	336	1,866
Endcap Vacuum Vessel	167	36	89	216	641	0	253	1,402
Supports	32	2	3	241	25	0	67	371
Feedthrus	462	36	53	1,818	382	0	725	3,476
Calorimeter Assy.	1,564	242	608	138	3,868	0	1,429	7,850
Tooling/Fixtures	1,403	66	30	3,687	216	0	1,280	6,682
Stacking Fixtures	203	8	0	840	0	0	231	1,282
Cryostat Assy Fixtures	543	22	0	1,100	0	0	471	2,136
Lifting Fixtures	155	6	0	400	0	0	123	684
Shipping Crates	51	2	0	497	0	0	121	670
Module Installation Fixture	91	4	0	200	0	0	65	359
Hadronic Fixture	71	3	0	150	0	0	40	264
Cooling Tube Layout Tool	72	3	0	100	0	0	35	210
EM Accordion Fixture	217	19	30	400	216	0	194	1,076
Test Equipment	31	2	4	450	15	0	131	633
Transportation	85	3	0	402	0	0	78	568
Cryogenic System	286	29	89	4,122	348	0	1,657	6,531
Equipment (above ground)	89	4	0	1,283	0	0	908	2,283
Test Beam Program	0	0	0	3,829	0	0	996	4,825
Installation/Test	269	39	47	67	0	653	279	1,353
Subsys. Mgt. & Integr.	1,894	843	1,002	0	2,478	115	1,140	7,471
Electronics				13,552			3,388	16,940

WBS Summary (Continued)

$$R\&D\% = \frac{R\&D}{Construction}$$

$$EDIA\% = \frac{EDIA}{Construction}$$

$$Contingency\% = \frac{Contingency}{Construction + EDIA}$$

$$Construction = \frac{Construction}{Const. + R\&D + Concep./\ Prelim.\ Design}$$

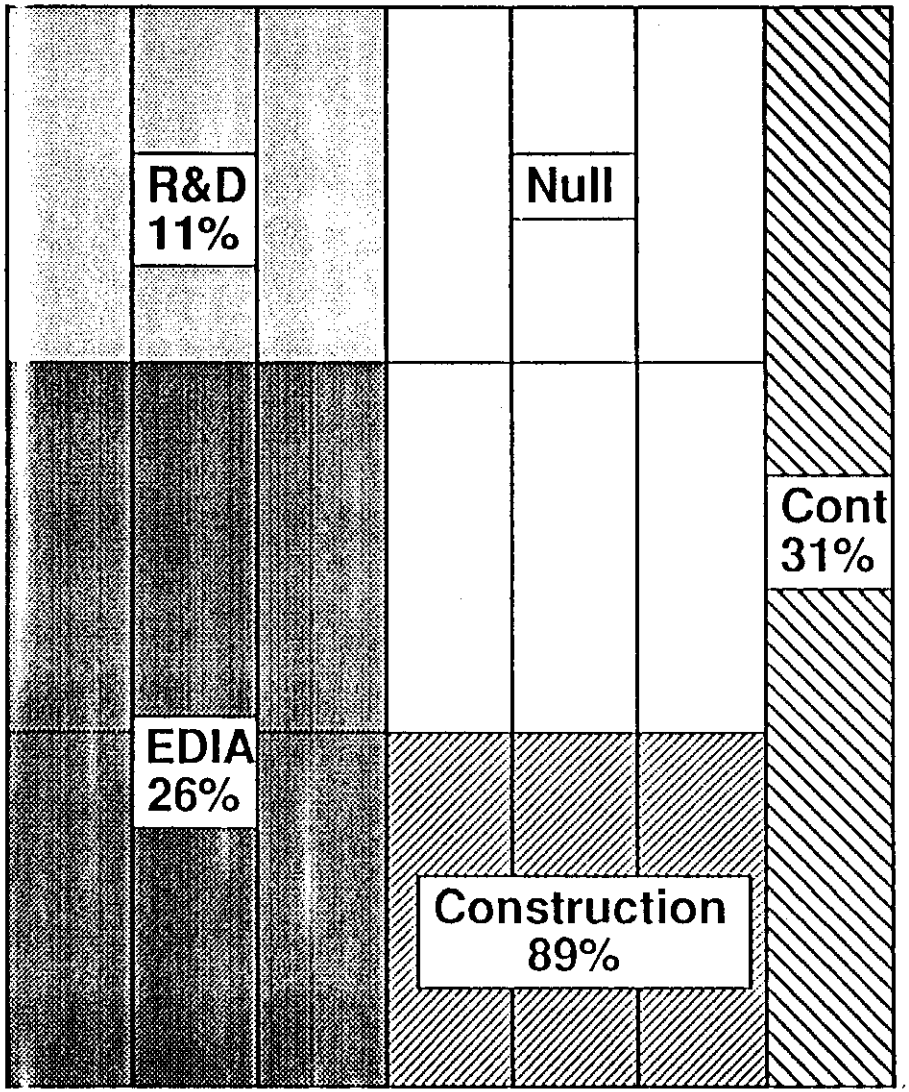

LAC Engineering Summary

	Manyears	$K
Modules	25.1	2,985
Cryostat	14.3	1,642
Calorimeter Assy.	13.1	1,564
Tooling/Fixtures	11.8	1,403
Test Equipment	0.3	31
Transportation	0.7	85
Cryogenic System	2.4	286
Equipment (above ground)	0.7	89
Installation/Test	2.3	269
Subsys. Mgt. & Integr.	15.9	1,894
Total	86.6	10,248

Engineering Methodology

EDI/QA	Drawing Sheets	PDs	ICDs	Test Specs	Spec Cntrl Drawwings	Schematics
Calorimeter Central Barrel Vessel Modules						

- **Program Elements and Subsystems Identified**
- **Drawing Sheet Count Developed**
- **Engineering Design Hours Estimated From Drawing Sheet Count**
- **Complete Engineering Estimate Generated Using Parametrics**
- **Estimated Costs Allocated to the Appropriate WBS Element**

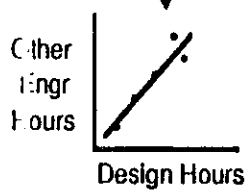

	Design Engr	Design Analysis	Engr Supt	Test Engr	Systems Engr	Logistics Engr	Engr Admin	Engr Labs	Quality/ Safety	OTS	Cmptrs	Travel
Calorimeter Central Barrel Vessel Modules Central Inner Central Outer												

WBS #	WBS Level	Program Element	EDI/QA	M&S	Total
5.2.1.2	4	Calorimetry			
5.2.1.2.1	5	Central Calorimeter			
5.2.1.2.2	5	Central W			

Example of Engineering Estimate (Hadronic Module 3)

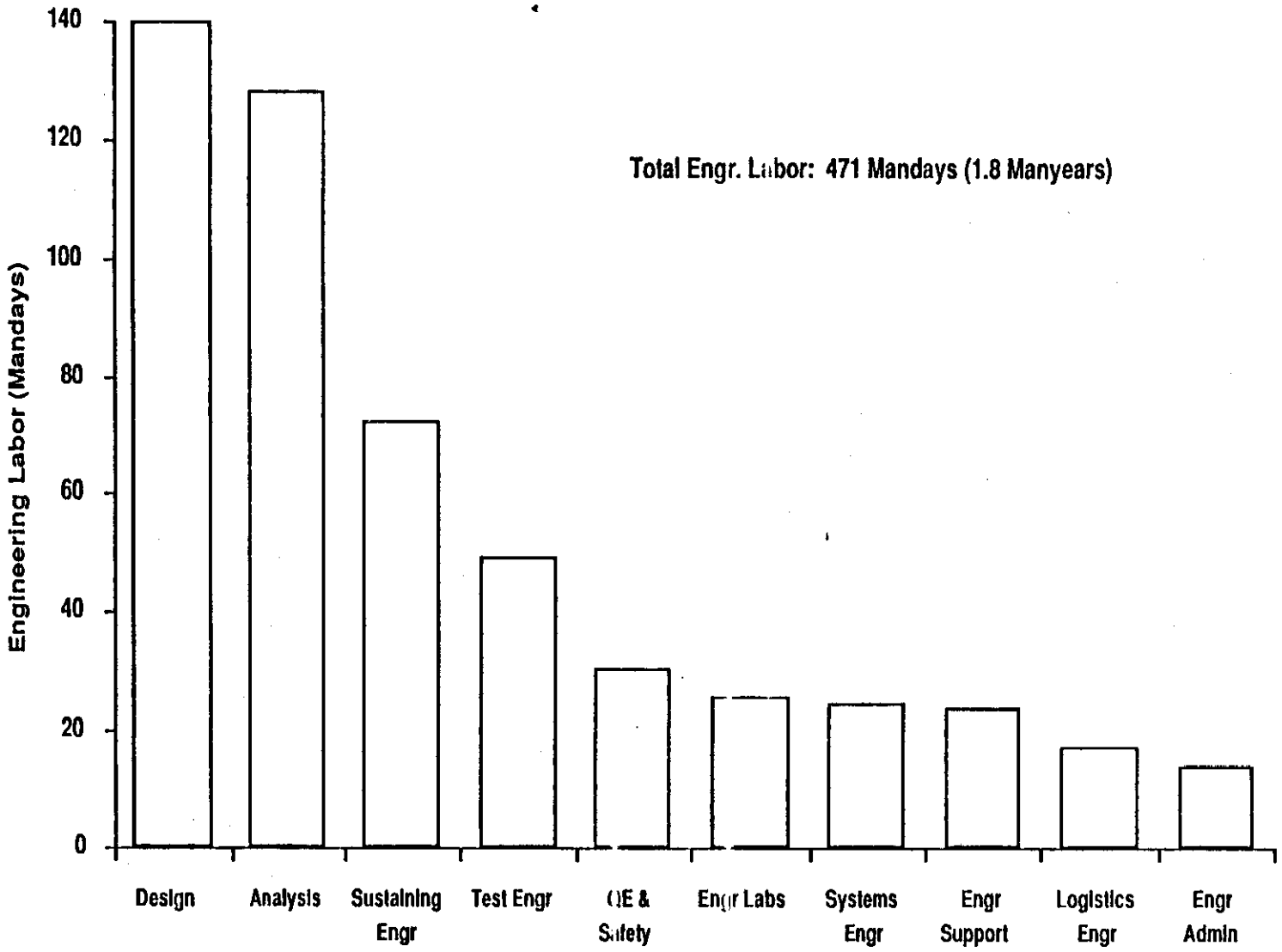

4/21/92

Example of Hadronic Procurement Unit Costs (Module 2)

	Unit Measure	Quantity	Unit Cost ($)	Total Cost ($)
Absorber (Cu)	MT	181	5506.54	995,376
G 10 Boards	m^2	1,140	14.52	16,361
Strongback Support Plates	kg	2,694	6.04	16,276
Spacers	each	67,554	0.39	26,346
Structural Shell	each	1	3995.16	3,995
Inner Support Guide	each	190	158.90	30,148
Inside Bar Guide	each	100	158.90	15,941
Module End Plates	kg	543	5.80	3,148
Compensating Spring/Fasteners	module	1,920	11.25	21,600
Radial Supports	meters	759	158.90	120,591
Stripline Cables	each	1,200	15.00	18,000
Total				1,267,782

4/21/92

Module Assembly Flow Chart

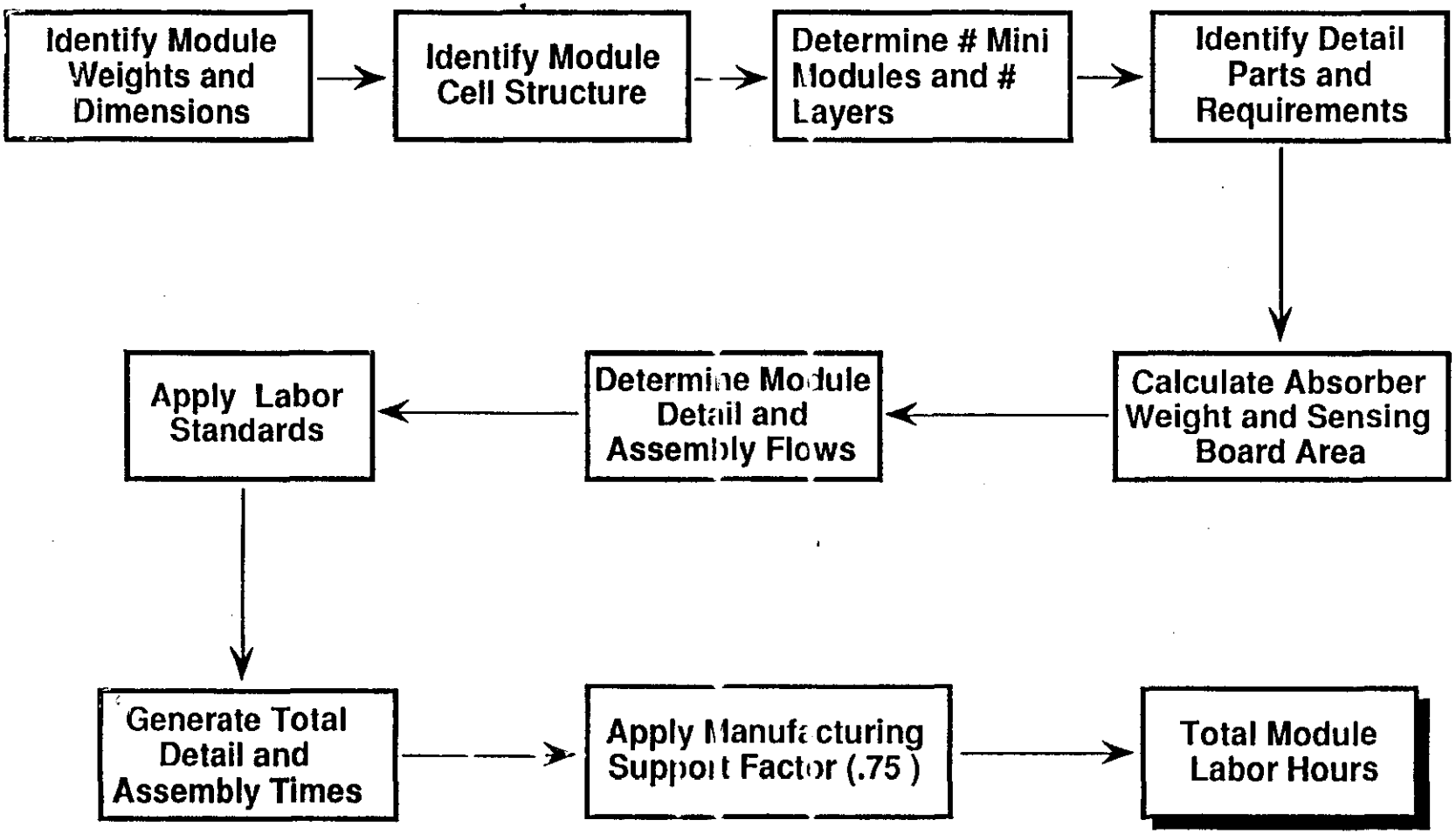

4/21/92

Example of Hadronic Assembly Costs (Module 2)

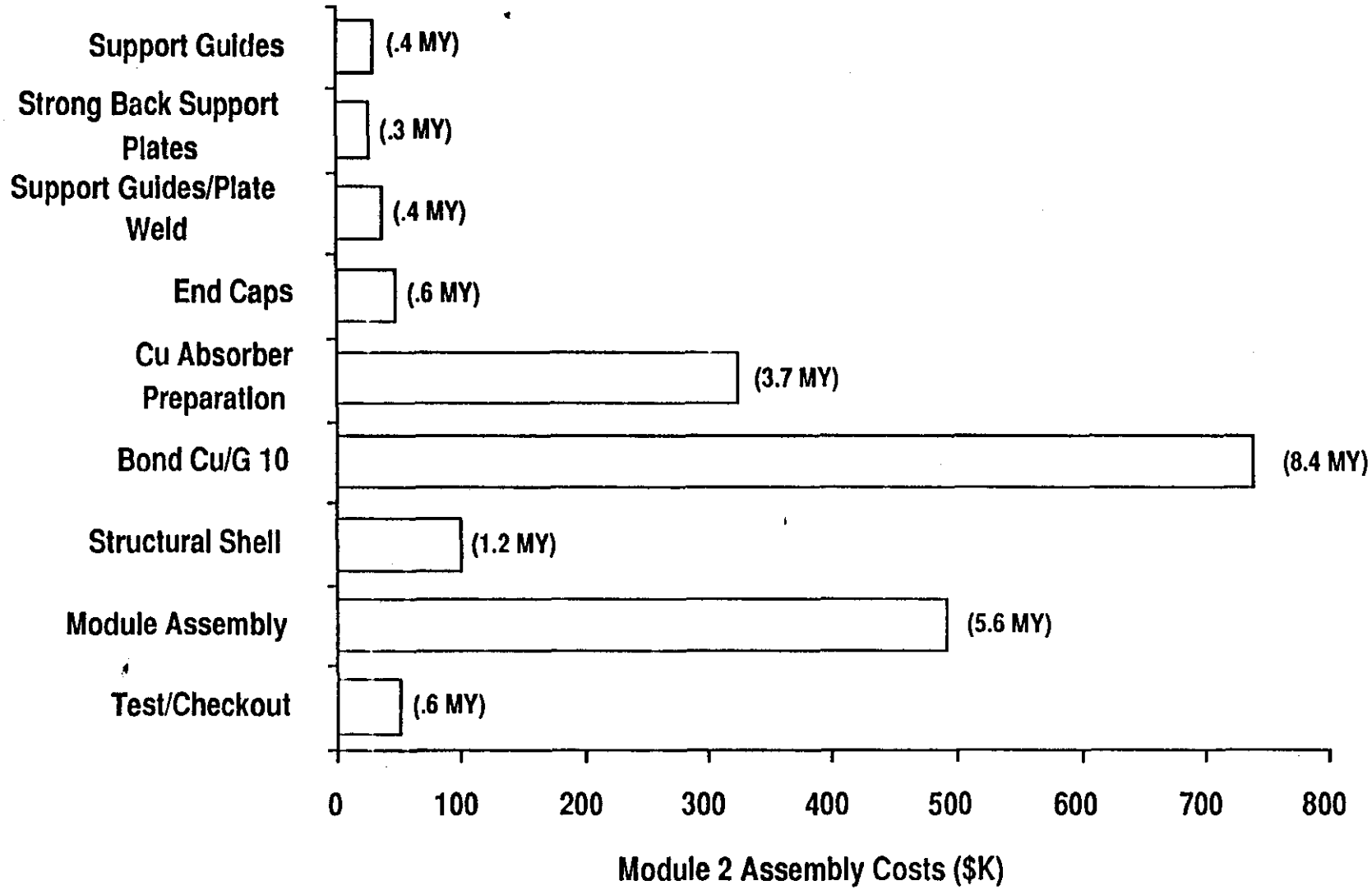

4/21/92

Example of Hadronic Assembly Step Estimates

Assembly Steps (Mini Module)	Quantity	Time (Hours)
Support Guides	1	4.6
Strong Back Support Plates	2	4.2
Support Guides/Plate Weld	1	5.7
End Caps	2	7.1
Cu Absorber Preparation	48	46.8
Bond Cu/Sensing Board	48	106.2
Structural Shell	1	14.7
Module Assembly	1	70.8
Test/Checkout	1	7.8
Total per Mini Module*		267.7

* Manufacturing Support and Tooling Maintenance Not Included

Example of EM Procurement Unit Costs (Module 1)

	Unit Measure	Quantity	Unit Cost ($)	Total Cost ($)
Absorber (Pb/SS/G 10)	MT	43	1848.00	78,756
G 10 Boards	m^2	2298	1636.00	3,759,135
Inner Strongback	kg	474	36.38	17,232
Outer Strongback	kg	1634	18.41	30,080
Tie Rods	each	1760	5.65	9,948
End Support	each	80	183.70	14,696
Standoffs/Fasteners	each	6400	0.18	1,152
Steel Pins	each	1760	13.31	23,426
Spacer Buttons	each	35200	0.18	6,336
Inner Supports	meters	83	158.90	13,172
Total				3,953,932

Example of EM Assembly Costs (Module 1)

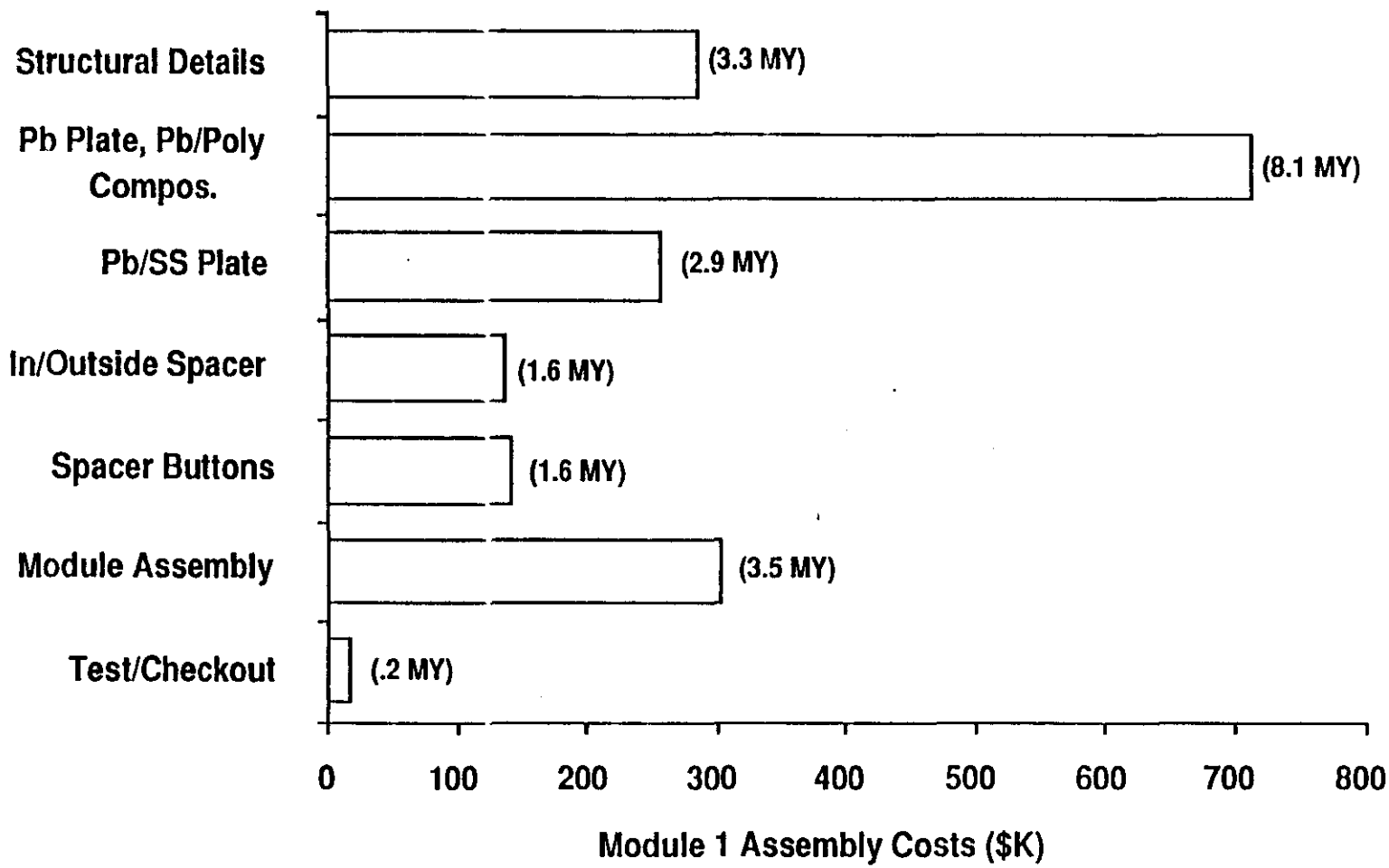

4/21/92

Example of EM Assembly Step Estimates (Module 1)

Assembly Steps (Mini Module)	Quantity	Time (Hours)
Structural Details	6	81.0
Pb Plate, Pb/Poly Compos.	15	201.2
Pb/SS Plate	15	72.5
In/Outside Spacer	60	38.8
Spacer Buttons	600	40.4
Module Assembly	1	86.0
Test/Checkout	1	5.1
Total per Mini Module*		525.0

* Manufacturing Support and Tooling Mair tenance Not Included

Cryostat Costs

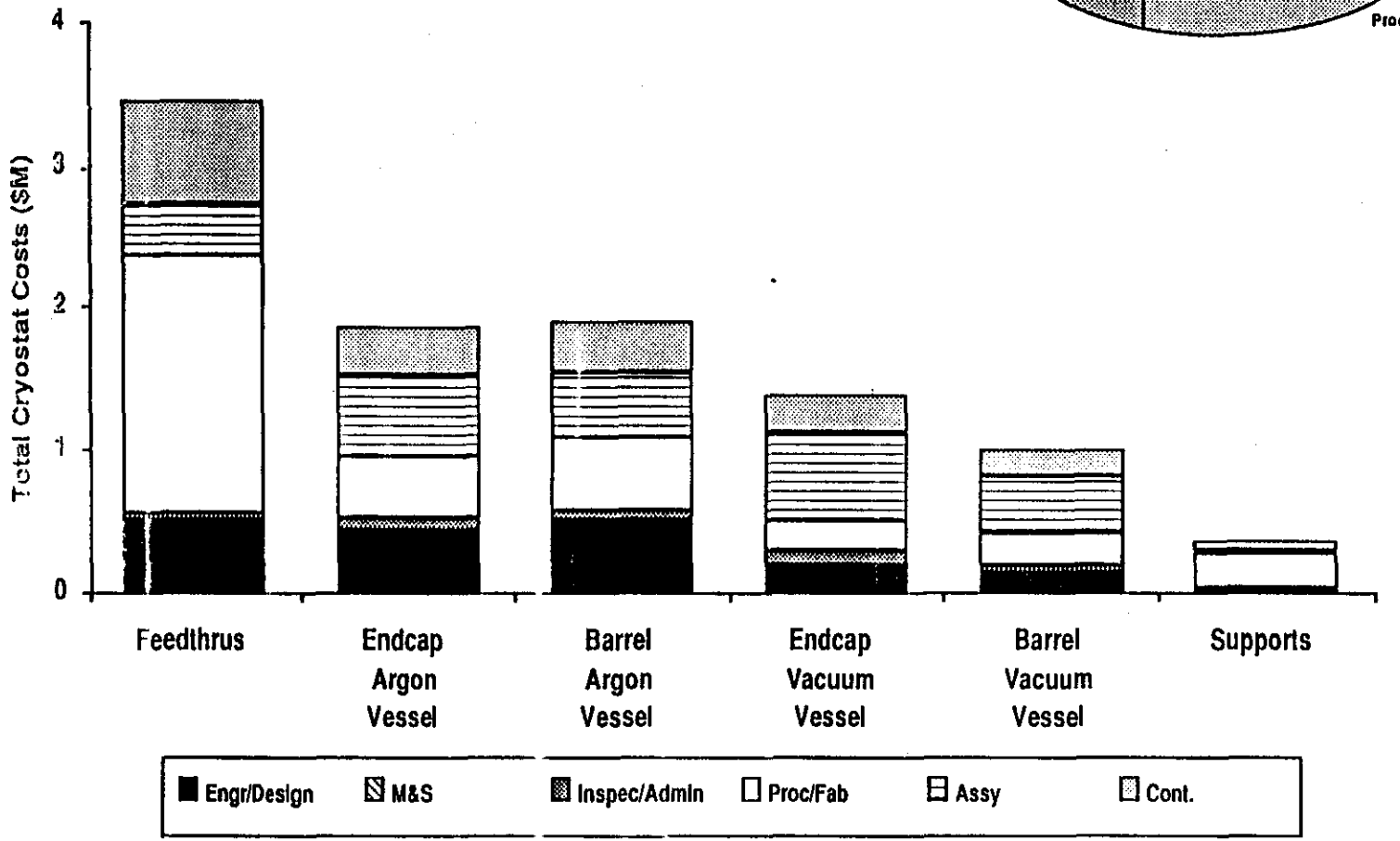

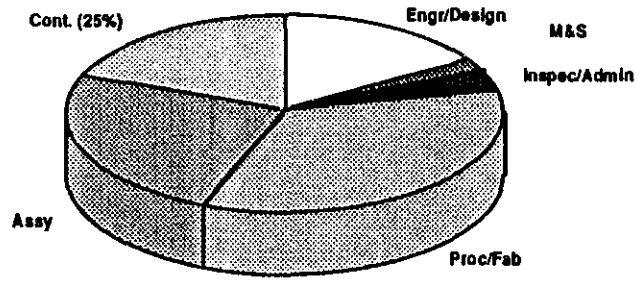

4/21/92

Example of Cryostat Procurement Unit Costs

Endcap Argon Vessel - Procurement Costs	Unit	Quantity	Unit Cost ($)	Total Cost ($)
Outer Shell				
Stays/Washers	kg	2491	4.54	11,308
Cylinder	kg	10960	4.54	49,756
Inner Shell				
Front Stays	kg	423	4.54	1,922
Cylinder	kg	1534	4.54	6,966
Rear Stays	kg	149	4.54	678
Main Washer (center)	kg	11956	4.54	54,280
Center Shell	kg	6987	4.54	31,720
Inner Shell Assy	system	1		77,665
Feedthru Interface Plate	each	49	1764.00	87,233
Cooling Coils				
Outer Shell				
Supply	meters	8	18.30	145
Vent	meters	8	6.41	51
Ribs	meters	69	14.26	979
Ends				
Supply	meters	13	18.30	240
Vent	meters	13	6.41	84
Ribs	meters	114	14.26	1,632
Double Bellows	each	16	970.00	15,520
Expansion Loops	each	80	274.00	21,920
Hoses	each	32	310.00	9,920
Ports	each	66	500.00	33,000
Seal Weld Strips	kg	691	39.69	27,414
LN2 Cooling Circuits	meters	33	94.54	3,145
Argon Vessel Assembly	weld-m	274	133.85	36,661

4/21/92

Cryostat Assembly Flow Chart

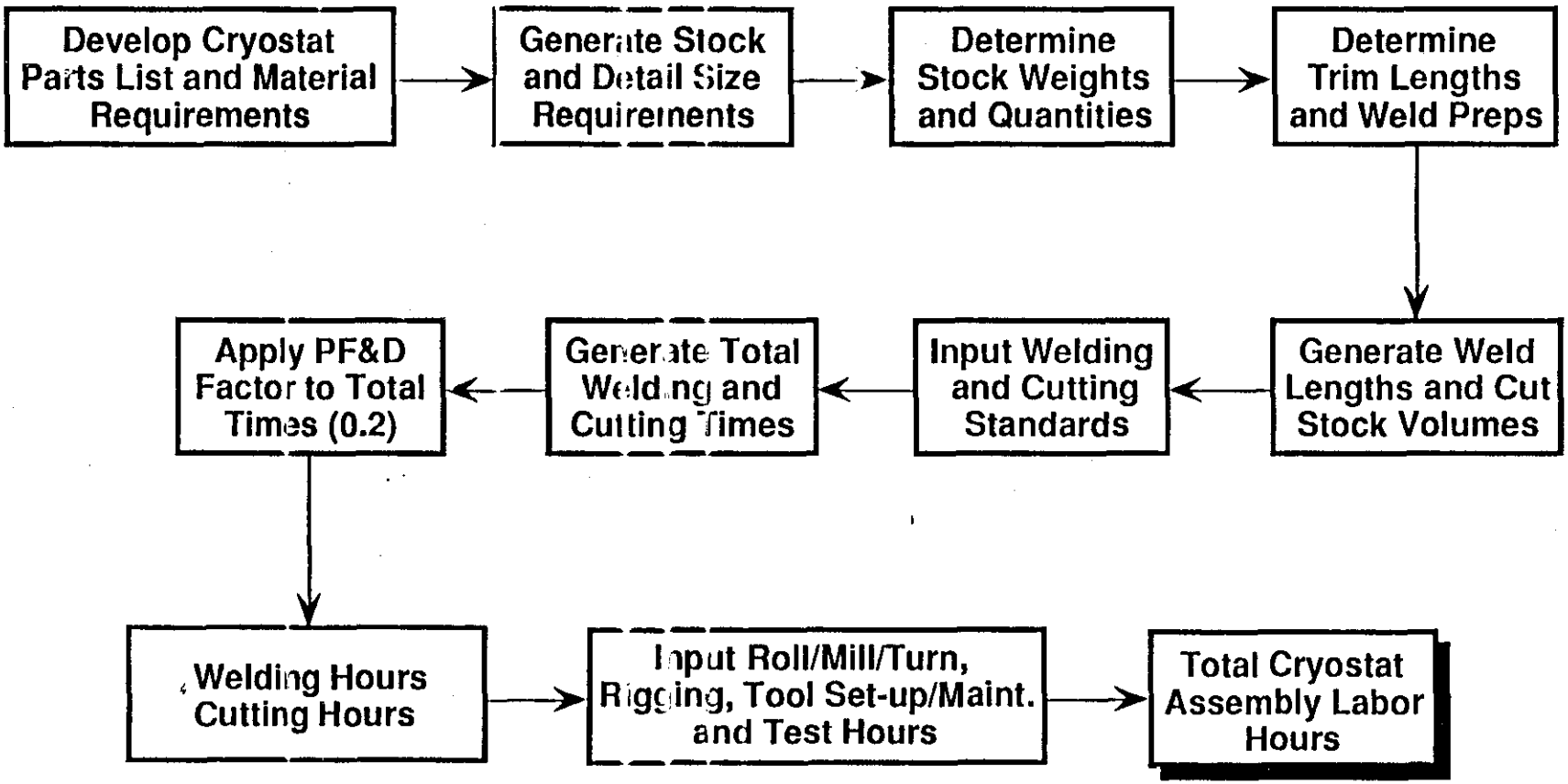

4/21/92

Calorimeter Assembly

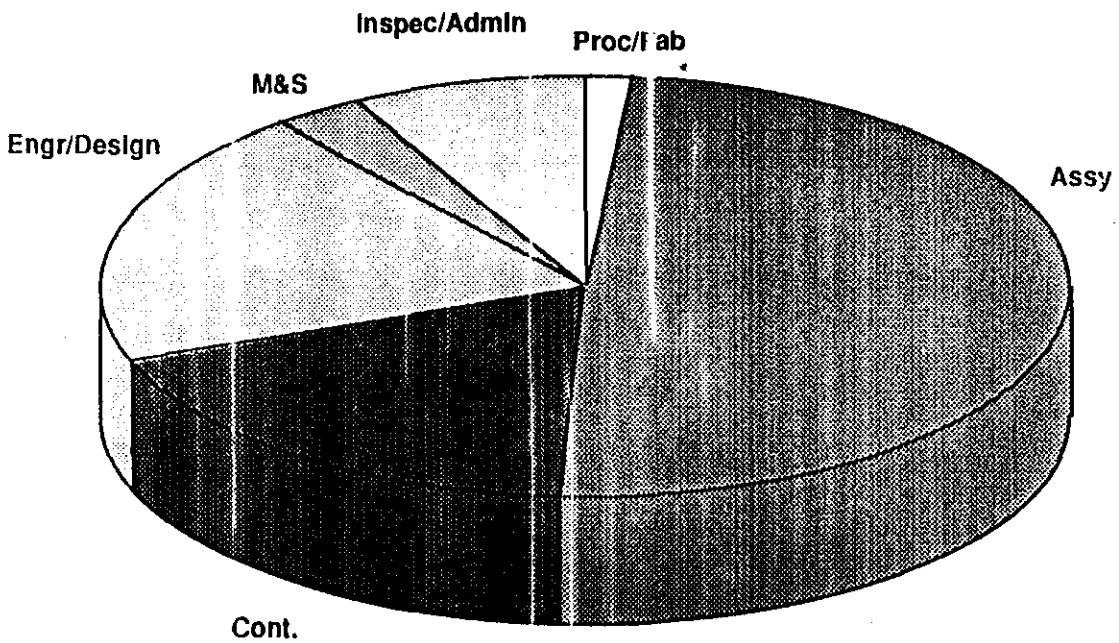

	$M
Proc/Fab	138
Assy	3,868
Cont.	1,429
Engr/Design	1,564
M&S	242
Inspec/Admin	608
WBS Total	7,850

4/21/92

Barrel Calorimeter Assembly Example

WBS Description	*Assembly Welding		Mechanical Assembly		Test	Total
	No. Men	Days	No. Men	Days	Mandays	Mandays
Barrel Calorimeter Assembly/Test	2	256	1	25	161	698
Vessel Rail Supports (composite)			2	5	3	13
Feedthrus	5	42	6	90	225	975
Feedthrus (connecting, sealing)	1	30	2	60	45	195
EM Section						
EM Spool	2	7	1	11	8	34
EM Module Placement	2	2	1	3	2	9
Hadronic Section						
Hadronic Spool	2	47	1	25	36	155
Hadronic Module Placement						
Hadronic 2	1	9	1	2	3	15
Hadronic 3	1	12	1	3	4	19
Hadronic 4	1	219	1	17	71	307
Hadronic 5	1	255	1	13	80	348
WBS Allocation						
Barrel Calorimeter Assembly/Test*						2767

Does Not Include Manufacturing Support

Tooling/Fixtures

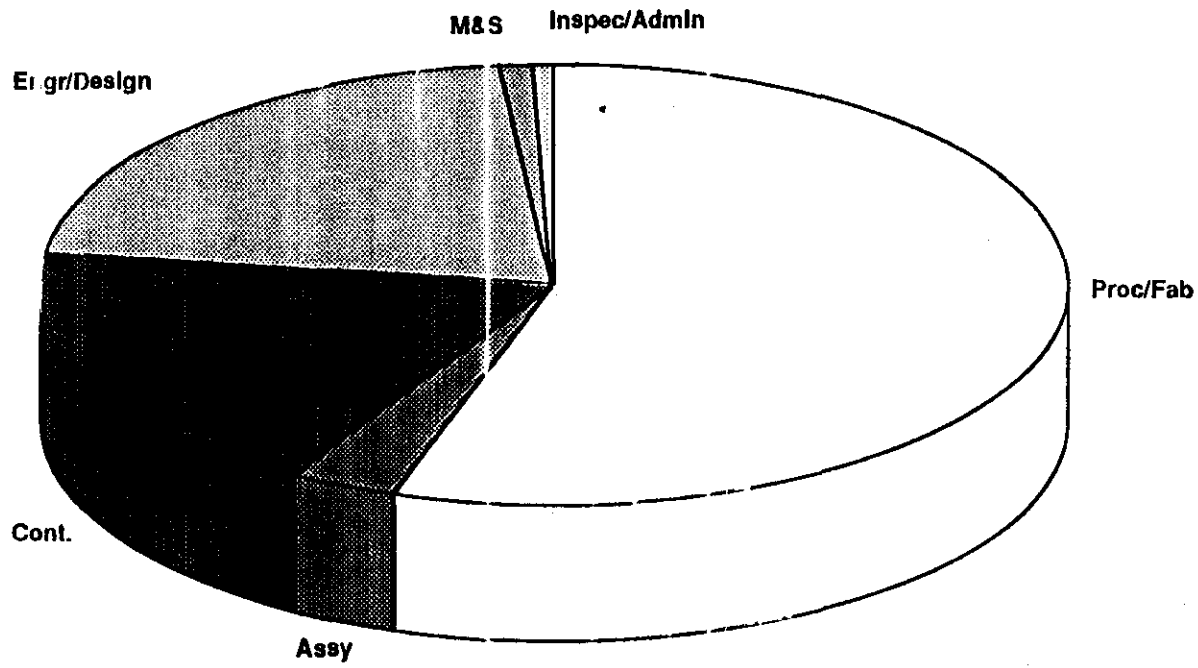

	$K
Proc/Fab	3,687
Assy	216
Cont.	1,280
Engr/Design	1,403
M&S	66
Inspec/Admin	30
WBS Total	6,682

Tooling Procurement Costs

	Unit	Quantity	Unit Cost ($)	Total Cost ($)
Stacking Fixtures	Each	28	30,000	840,000
Assembly Fixtures	Each	22	50,000	1,100,000
Lifting Fixtures	Each	16	25,000	400,000
Shipping Crates	Each	662	750	496,500
Module Installation Fixture	Each	1	200,000	200,000
Hadronic Tool	Each	1	150,000	150,000
Cooling Tube Layout Tool	Each	2	50,000	100,000
EM Accordion Tool	Each	2	200,000	400,000
Total				3,686,500

Test Equipment

- Total Cost = $633 K
  - Procurement Cost = $450K

	Unit	Quantity	Unit Cost ($)	Total Cost ($)
Leak Detectors	Each	4	15,000	60,000
Computer System	System	1	290,000	290,000
Misc. (Voltmeters, Scopes, etc.)				100,000
Total				450,000

Transportation

- Total Cost = $568 K

Basis:

- Truck transportation at $2100 per truckload with a total of 191 loads (109 for the endcaps and 82 for the barrel).

Cryogenic System

- Total Cost = $6.5 M
- includes storage dewars above ground and all piping and valves required leading up to vessels
  - Procurement Cost = $4.1 M

Cryogenic Service Component	Total Cost ($K)
Exper. Hall Argon Storage LN2 Systems	1,110
LN2 Source System at Surface	266
LN2 Conditioning Systems	98
Argon Dewar Fill and Distribution System	114
Argon Dewar to Argon Conditioner System	104
Argon Conditioner System	116
Module Cooling System	163
Argon Boiler	125
LN2 Boiler	124
Argon Supply Storage Dewars	250
Vacuum System	307
Argon Pump and Purge System	1,061
Installation	296
Total	4,122

Component	Specs	Qty	Cost
LN Source System at Surface			
Dewars	60,000 liters		$200,000
Filling Station			$30,000
Valves	2"	4	$14,000
Transfer Lines	2"	100'	$11,000
Redundant Valves	2"	3	$10,500
Total			$265,500

4/21/92

Equipment (above ground)

- Total cost = $2.28 M
- Procurement estimate:

Equipment	Cost ($K)
Boom Crane, 50 MT - 20 mo. @ 5k	100
Transport Carts - 25 @ $4k	100
Mechanical Fab Equipment	750
Dewars - 5 @ $20k	100
LN2 Inventory	52
Ar Inventory	53
Vacuum System	13
Tempory Vessel Prep Structure	40
Work Benches, Storage, Desks	25
Personal Computers	30
Standard Rigging Equipment	20
Total	1,283

Test Beam Program

- Total Cost = $4.8M
- Calibration in the test beam includes the labor and material required for module calibration from initial test beam availability through beam operational. The following ground rules and assumptions have been used to determine the cost estimate:

  1. Test effort on-going for 2 years (1997-1998)
  2. 3.5 meter diameter cryostat
  3. 2 technicians full time
  4. Physicists salaries not included
  5. Includes cost for 50-ton capacity 3-axis table at $200k plus other fixtures for a total of $440k
  6. Controls, computers, and data acquistion provided by the SSCL
  7. 20 LAr modules built for testing at an average cost of $94k based on production module costs
  8. Average of 127 channels per LAr module based on production units

Installation/Test

- Total Cost = $1.35 M
- Installation and test of the LAC was based on 6 months and a crew of 15 people, plus manufacturing support and EDIA.

Subsystem Management & Integration

- Total Cost = $7.47 M
- 7% of Total Estimate
- Estimate Based on MMC Historical Data Base for Large Integration Projects

Percentage of Labor

	Engr/ Design	Insp/ Admin	Instl/ Assy
Project Mgmt. and Admin.	8.0%	8.0%	5.0%
Resource Management	3.0%	3.0%	1.5%
ES&H	1.5%	1.5%	5.0%
Quality Assurance	2.5%	2.5%	5.0%
System Integration	7.5%	7.5%	7.5%

Basis of Travel Estimate:

1 Engr Manyear = 6 trips
Average cost of each trip = $1200
Total Travel Cost = $623 K

Schedule

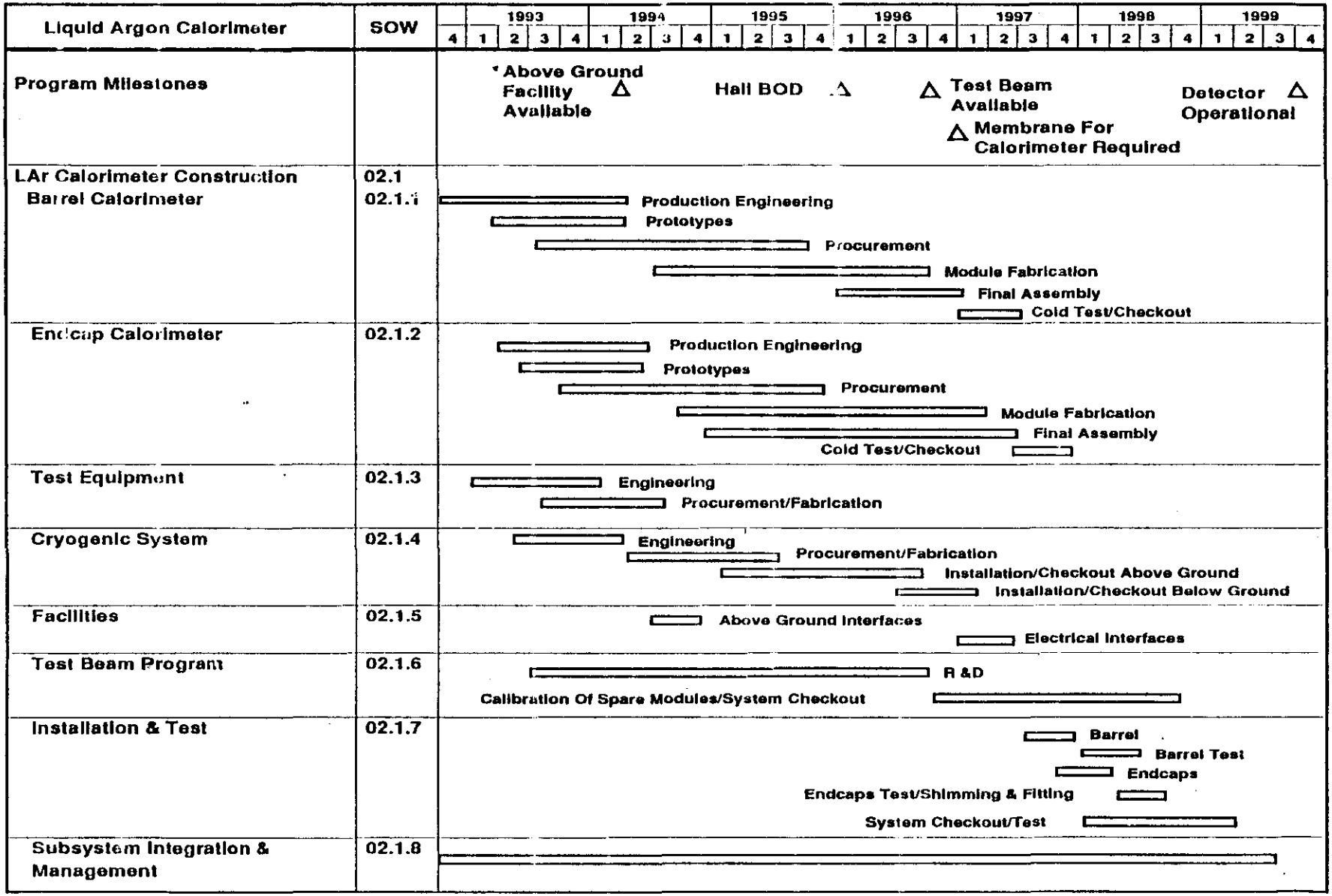

Preliminary

4/21/92

Funding Profile

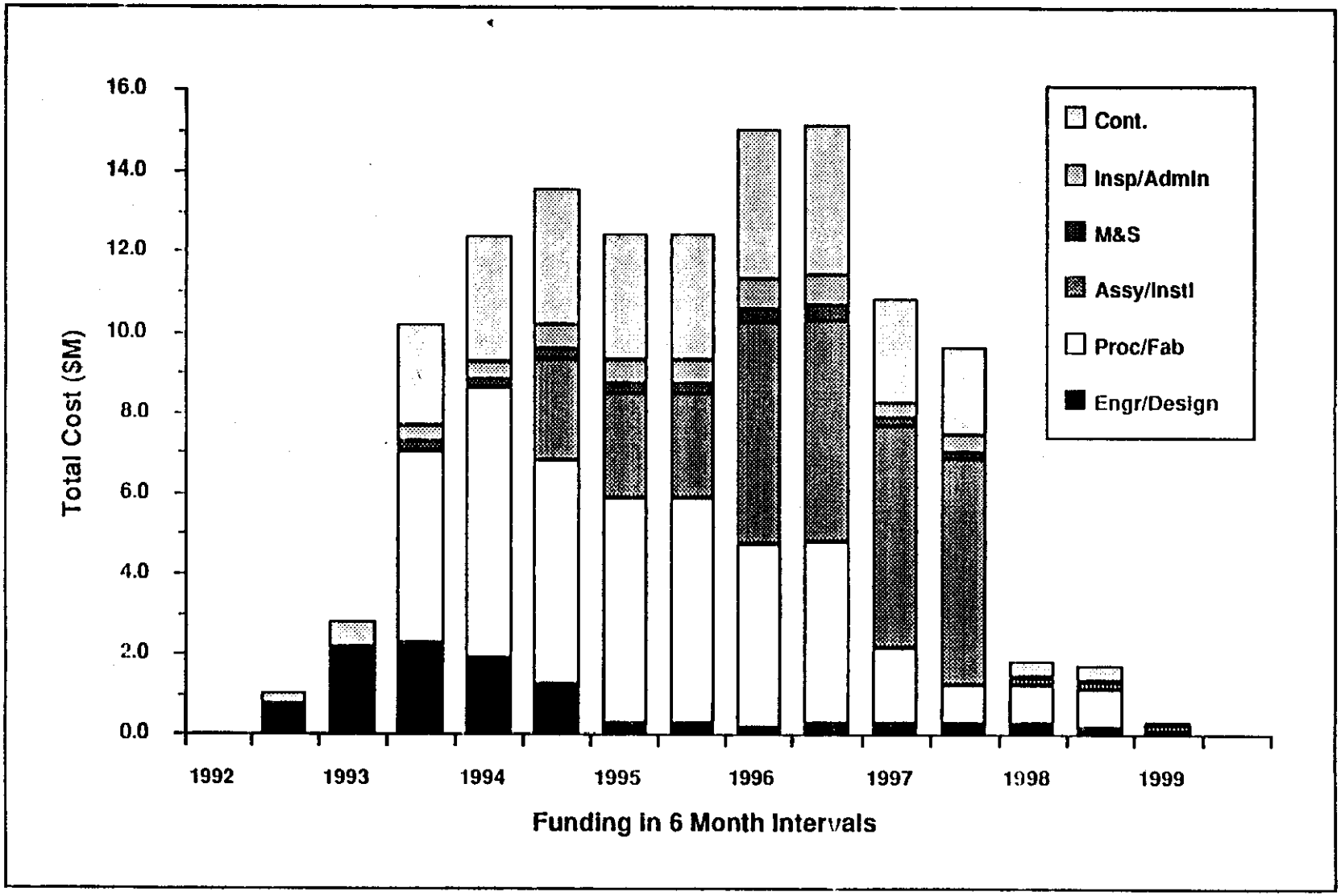

4/21/92

gem

γeμτ

Presentation by:

John Rutherfoord

J. Rutherfoord
GEM LAC Cal Cost Review
4/22/92

GEM LAC FCal

Physics Goals

Hermetic measurement of global $\vec{p}_T$

Forward tagging jets

Critical Parameters

Mean density of calorimeter (λ in cm as small as possible)

Diameter of beam hole (As small as possible)

"Tube" Electrode structure

Fast read-out of charge

Avoid "positive ion build-up" problem

Outstanding issues

Blow-Up of Central Endcap and Forward Calorimeter

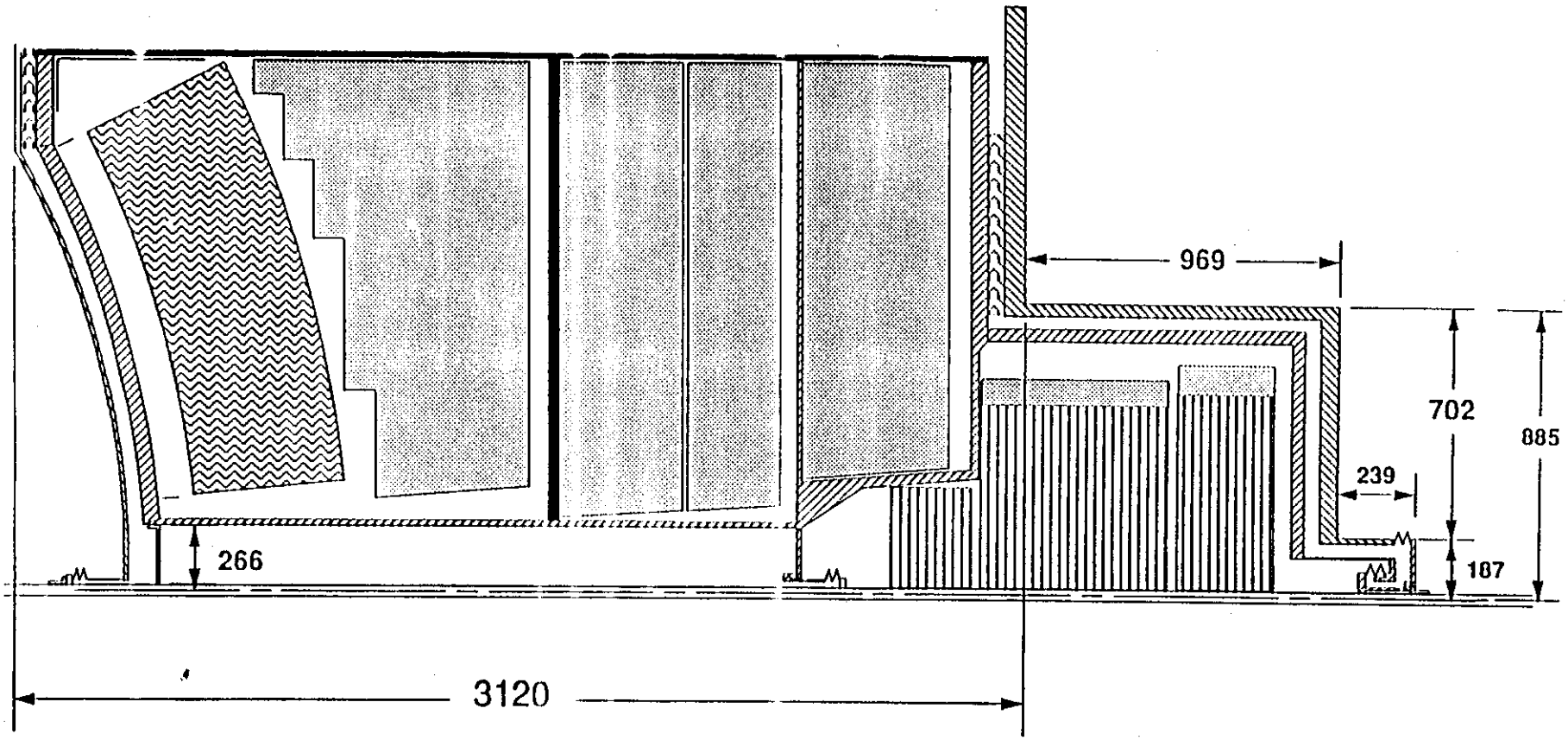

KLKillian Central Calorimeter Walls 4/13/92

View with10x Expansion in Vertical Direction

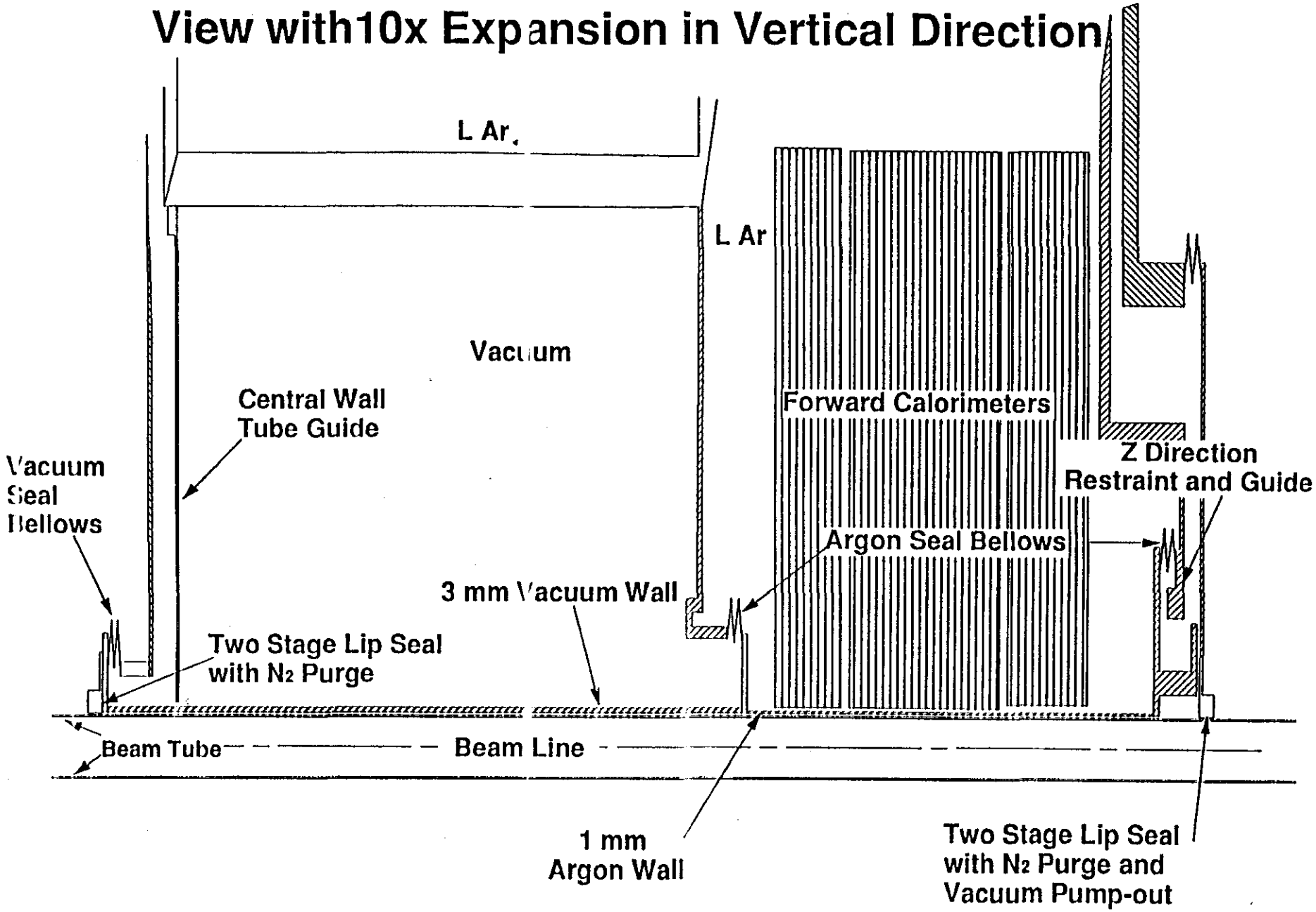

KLKillian Central Calorimeter Walls 4/13/92

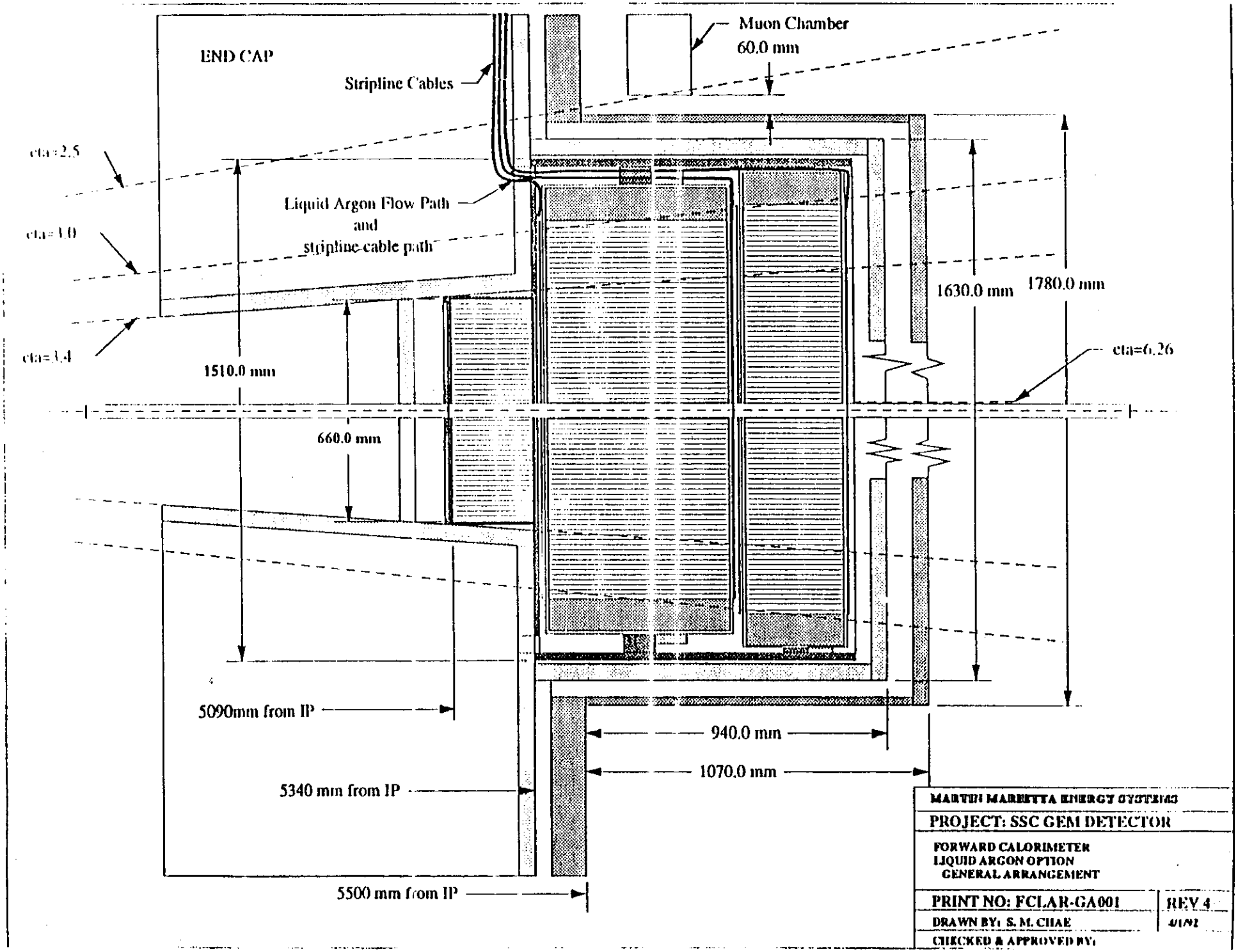
END CAP
Stripline Cables
Muon Chamber
60.0 mm
eta=2.5
eta=3.0
eta=3.4
Liquid Argon Flow Path
and
stripline cable path
1510.0 mm
660.0 mm
1630.0 mm
1780.0 mm
eta=6.26
5090mm from IP
5340 mm from IP
5500 mm from IP
940.0 mm
1070.0 mm
MARTIN MARIETTA ENERGY SYSTEMS
PROJECT: SSC GEM DETECTOR
FORWARD CALORIMETER
LIQUID ARGON OPTION
GENERAL ARRANGEMENT
PRINT NO: FCLAR-GA001
REV 4
DRAWN BY: S. M. CHAE
CHECKED & APPROVED BY:

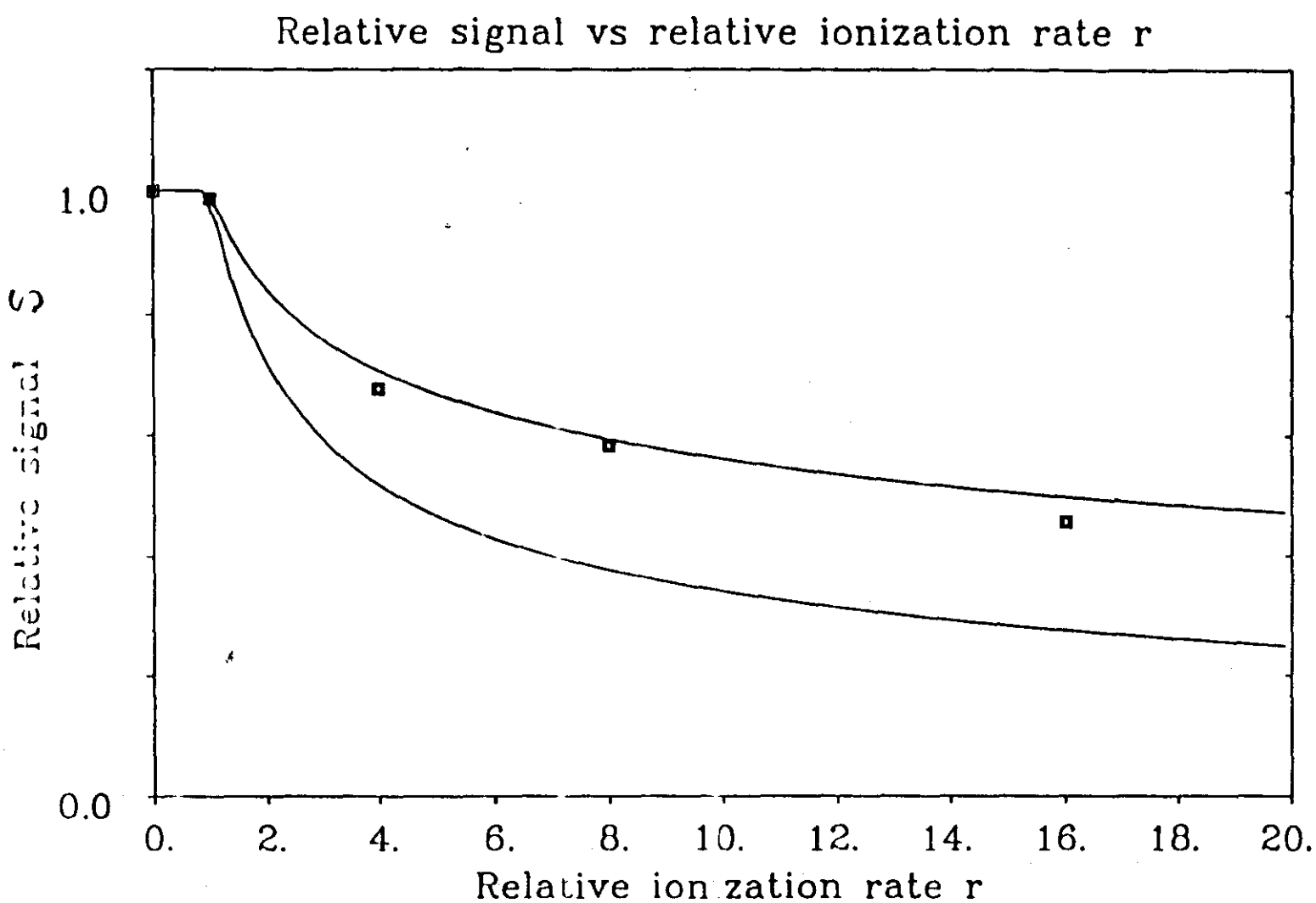
Relative signal vs relative ionization rate r
1.0
0.0
Relative signal S
0.
2.
4.
6.
8.
10.
12.
14.
16.
18.
20.
Relative ion zation rate r

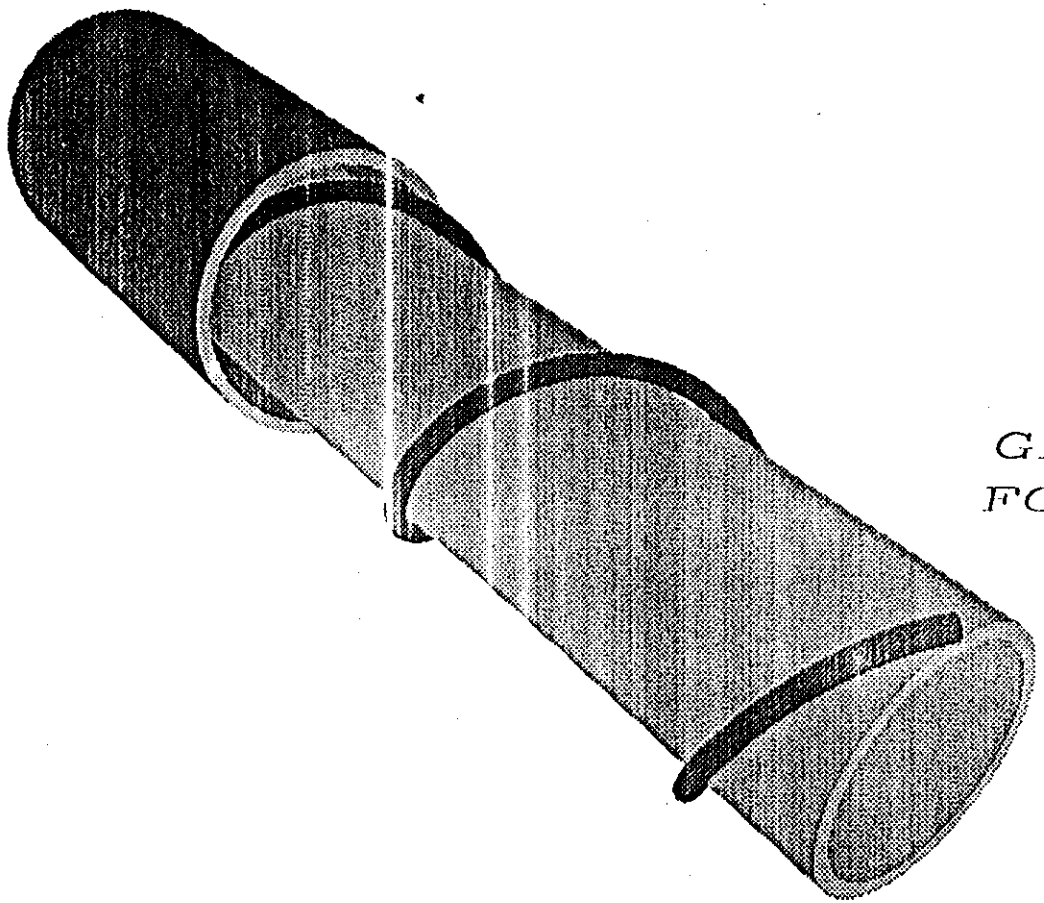

GEM LAC
FCal Tube

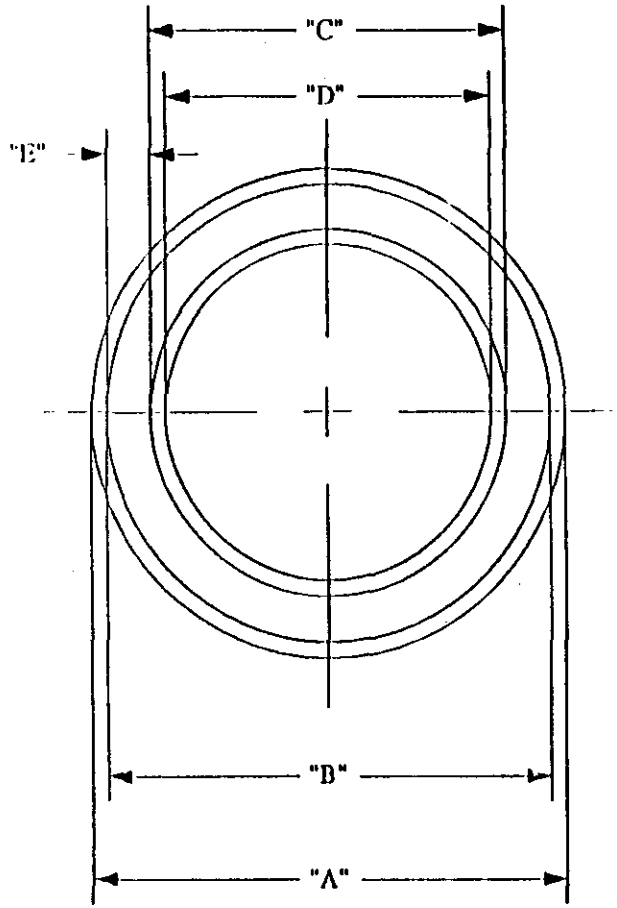

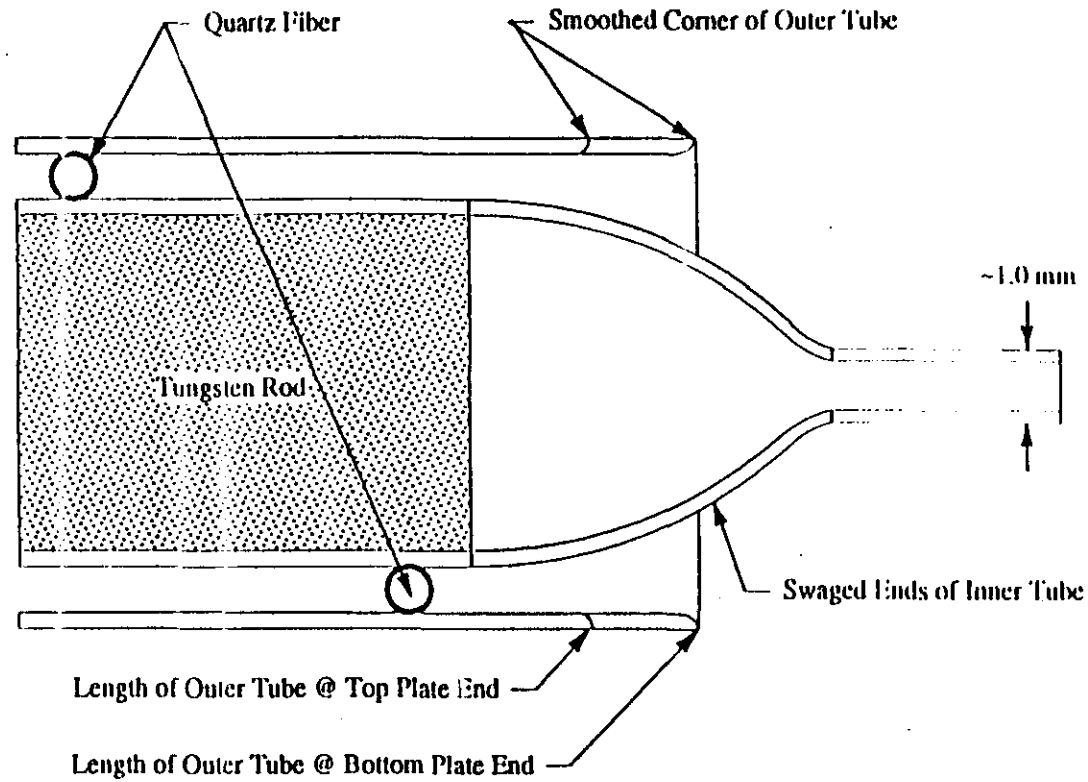

DETAIL OF TUBES AT (BOTH) ENDS

MODULES	A	B	C	D	E
	mm	mm	mm	mm	mm
EM	5.40	5.0	4.80	4.40	0.10
Hadronic	5.836	5.436	4.836	4.436	0.30
Tail Catcher	6.302	5.902	5.302	4.902	0.30

MARTIN MARIETTA ENERGY SYSTEMS

PROJECT: SSC GEM DETECTOR

FORWARD CALORIMETER
LIQUID ARGON OPTION
CYLINDER TUBE ASSEMBLY DESIGN

PRINT NO: FCLAR-MD003 | REV 1

DRAWN BY: S. M. CHAE | 4/1/92

CHECKED & APPROVED BY:

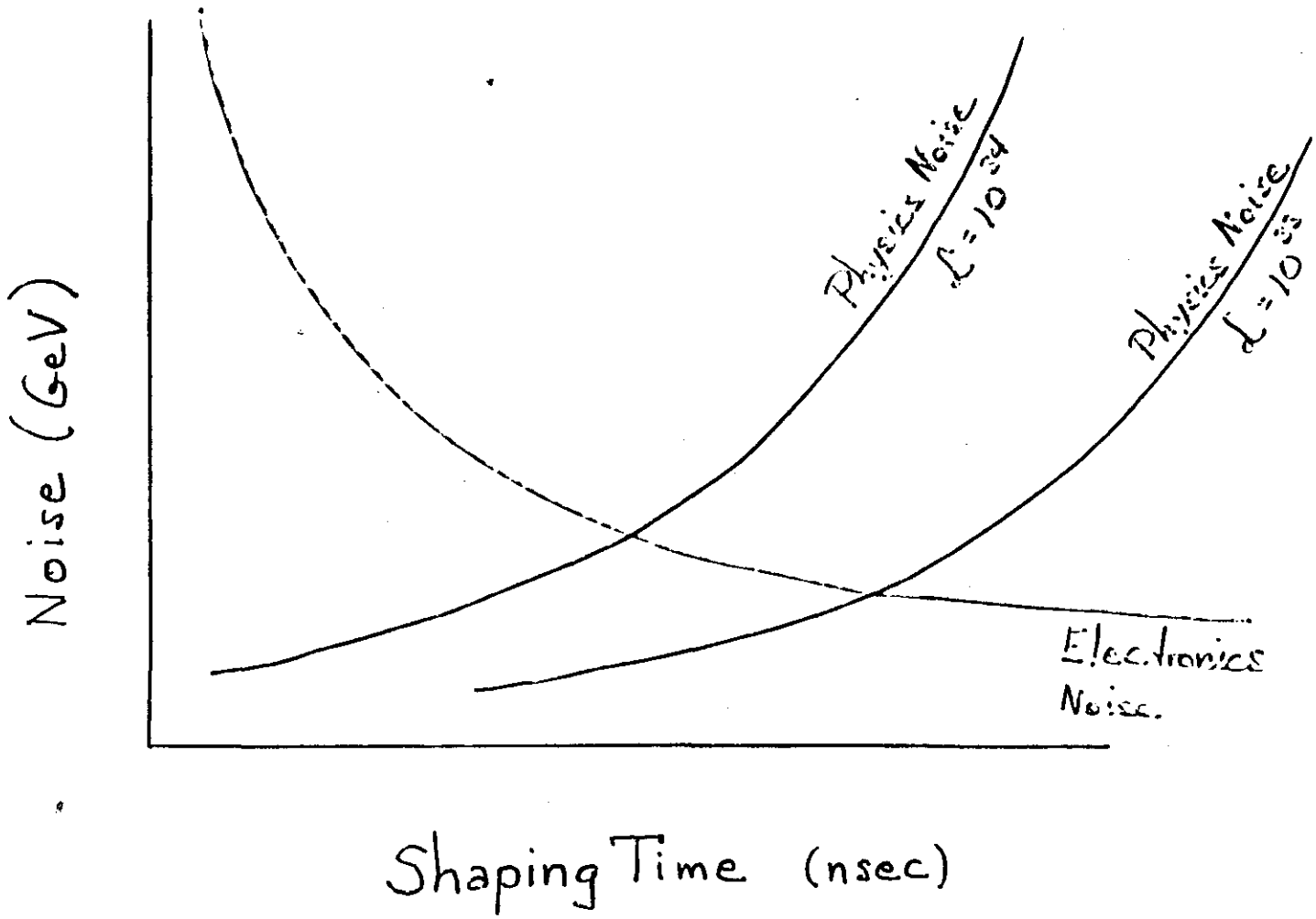
Noise (GeV)
Physics Noise
$\mathcal{L} = 10^{34}$
Physics Noise
$\mathcal{L} = 10^{33}$
Electronics
Noise.
Shaping Time (nsec)

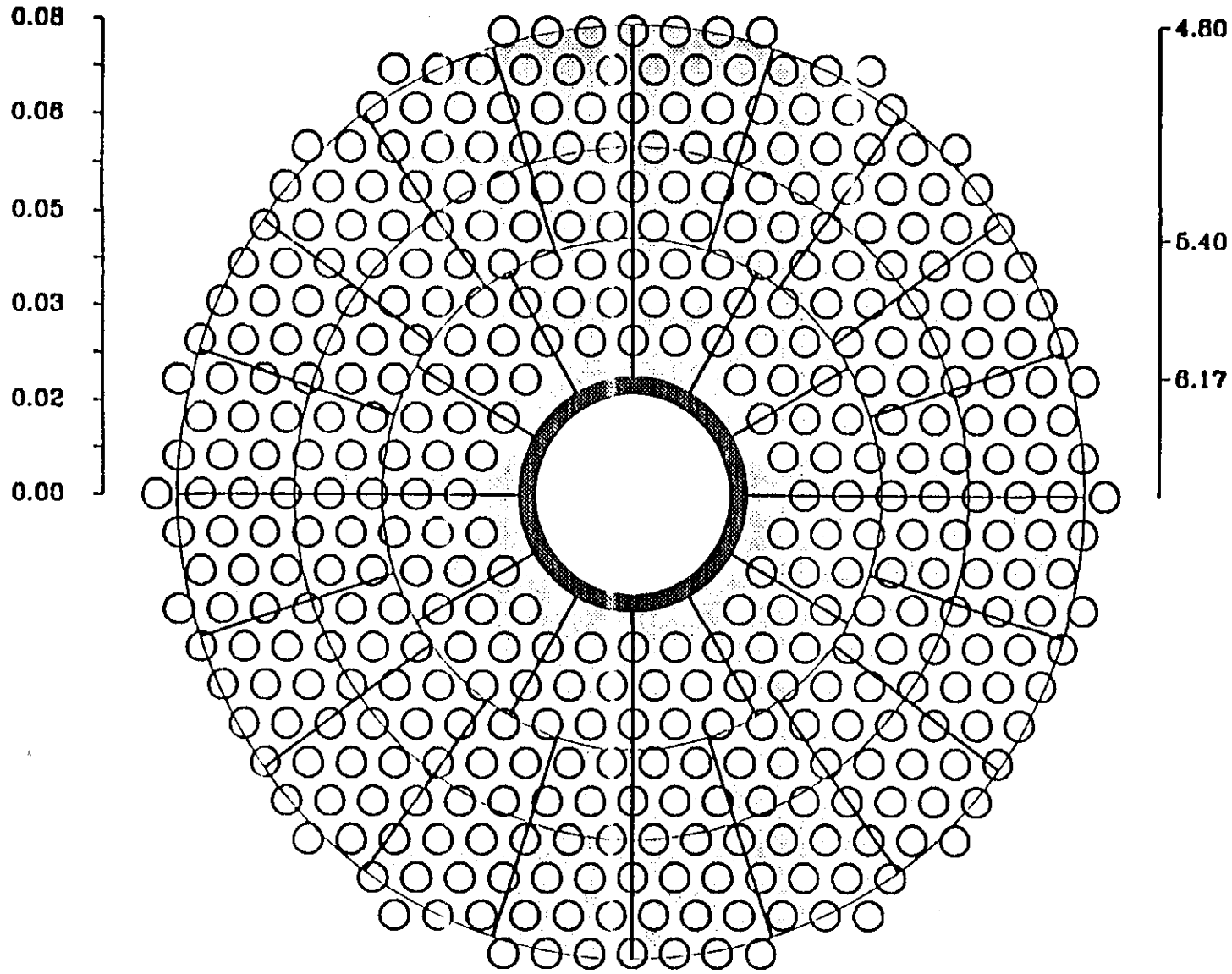
0.08
0.06
0.05
0.03
0.02
0.00
4.80
5.40
6.17

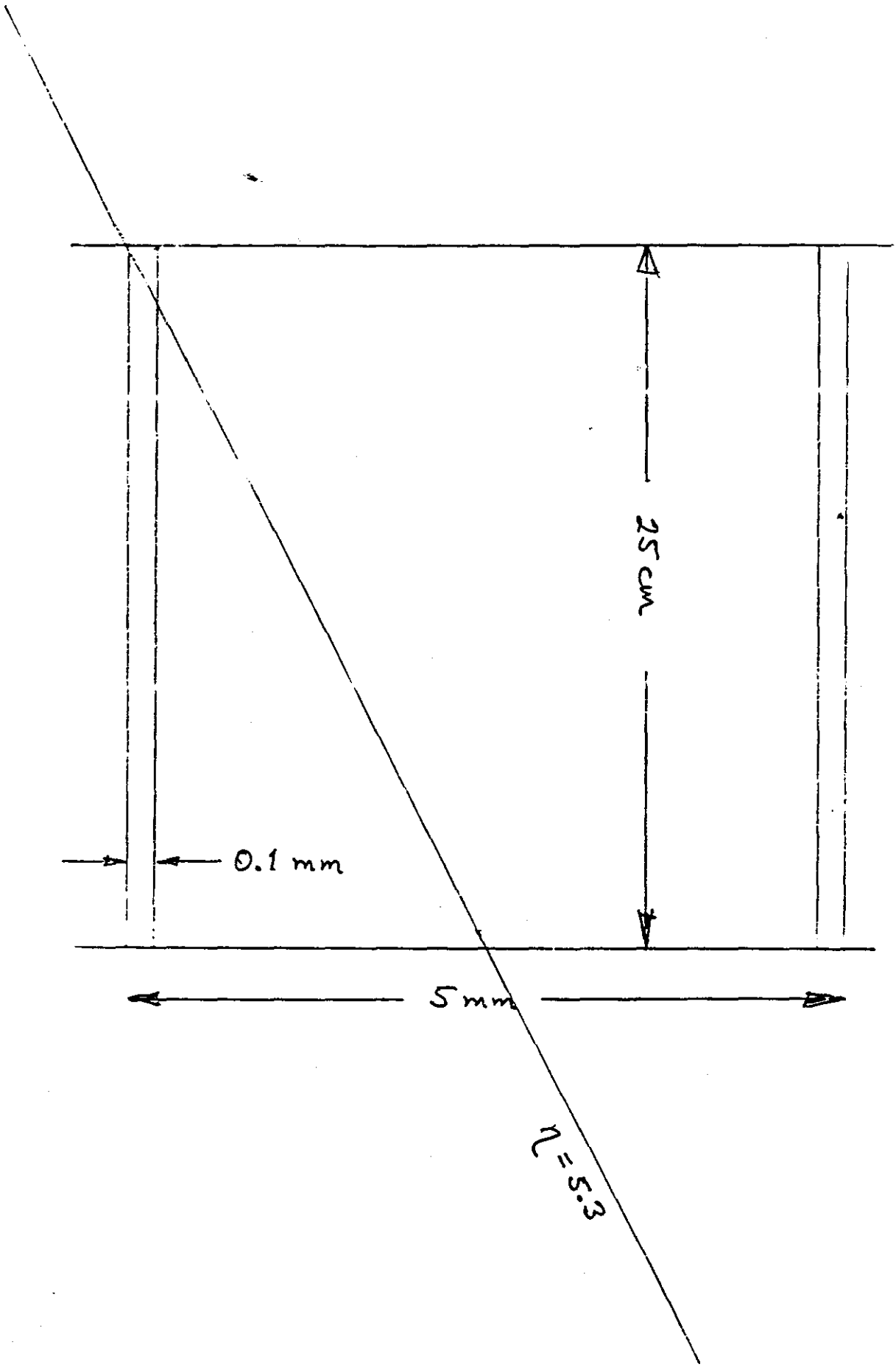
25 cm
0.1 mm
5 mm
η = 5.3

LAr Tube FCal

Parameters:

Tube radius	2.5 mm
Gap	0.1 mm
$\hat{C}$	2.2 nF/m
Z	2.0 Ω
t_D	20 ns
V_0	125 volts
Nearest neighbor center-to-center distance	7.5 mm
No. of holes in EM section	6600
Sampling fraction	0.3 %

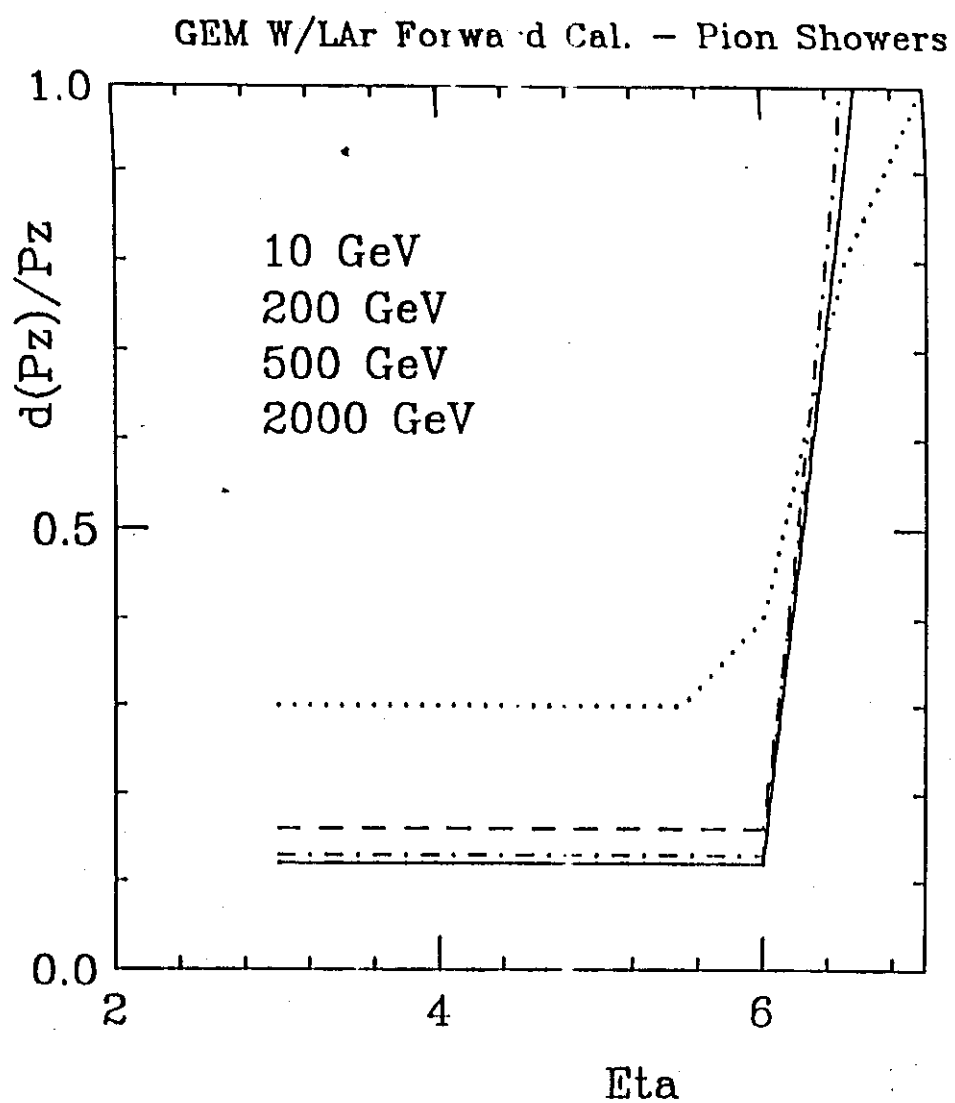
GEM W/LAr Forwa d Cal. – Pion Showers
1.0
0.5
0.0
d(Pz)/Pz
10 GeV
200 GeV
500 GeV
2000 GeV
2
4
6
Eta

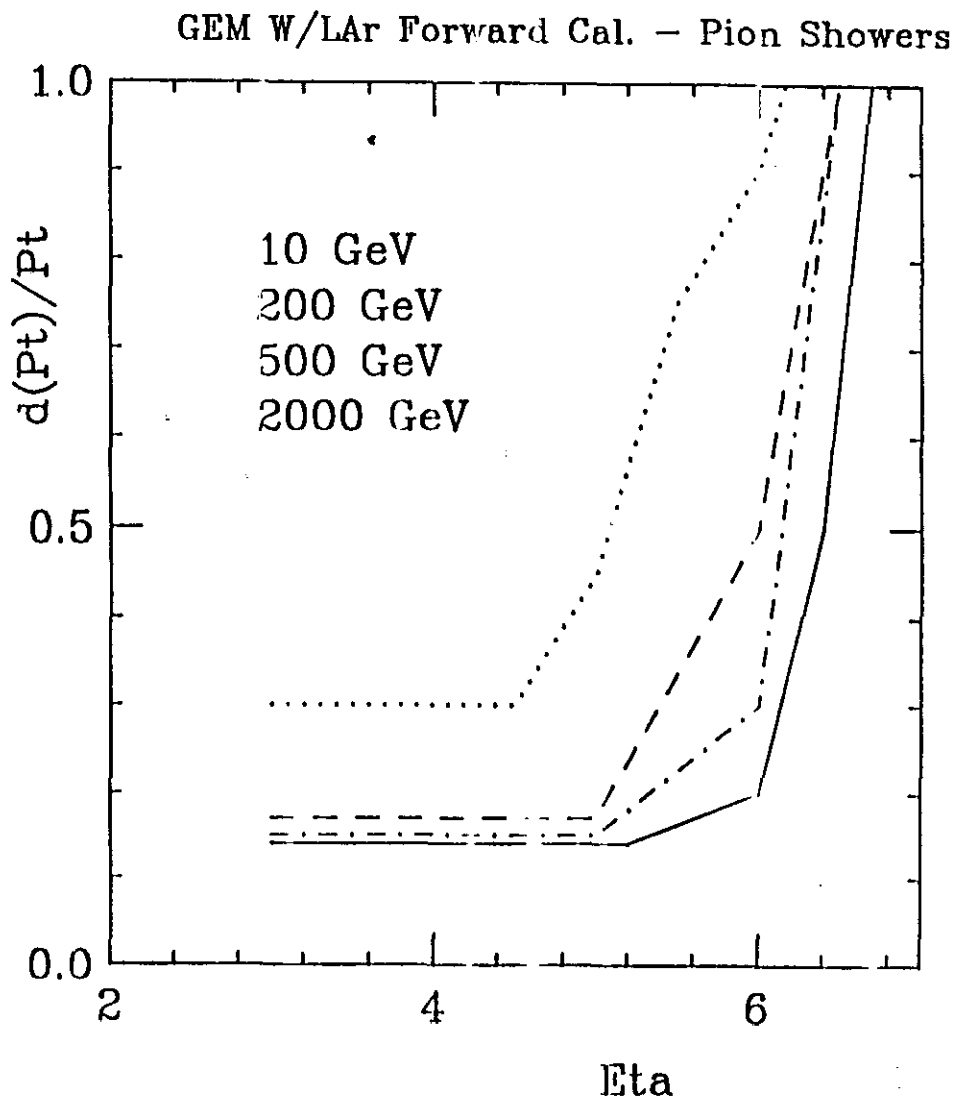
GEM W/LAr Forward Cal. – Pion Showers
1.0
0.5
0.0
d(Pt)/Pt
10 GeV
200 GeV
500 GeV
2000 GeV
2
4
6
Eta

GEM Parameters
Liquid Argon Forward Calorimeter

NAME	EM	Hadronic	Tail Catcher	units
Distance from IP to near face	5090	5385	6005	mm
Depth in Z	250	570	300	mm
Distance from IP to Module Mid-Plane	5215	5670	6155	mm
Inner Radius	20	21.69	23.47	mm
Outer Radius	330	566	614	mm
Unit Cell				
Center to Center	7.5	8.1545	8.8525	mm
Tube Diameter ID	5	5.4364	5.9017	mm
Tube Wall Thickness	0.2	0.2	0.2	mm
Liquid Argon Gap	0.1	0.3	0.3	mm
Drift Time	20	60	60	nsec
Sampling Fraction (by Volume)	3.16	8.41	7.78	%
Tube Capacitance	521	415	238	pF
Tube Inductance	2.04	13.33	6.43	nH
Tube Impedance	1.98	5.67	5.20	Ohms
Weight	1.46	12.49	7.65	Metric Tons
Number of Tubes	6871	17261	17263	tubes

Rutherfoord / Chae, 4/16/92

Outstanding Issues

Physics Performance Simulation Results

Shower leakage into muon system

Activation (CINDER)

Beam Tube

- Diameter thru FCal
  - Vacuum in beam tube
  - Survey
- Clearance thru FCal
  - Alignment and stability of alignment
  - Mechanical stresses on beam tube
- Heat loading on LAC FCal

LIQUID ARGON OPTION

FORWARD CALORIMETER
LIQUID ARGON OPTION

INDEX

1.0 COST ESTIMATES

- 1.1 LAr FCAL COST ESTIMATE
- 1.2 MATERIAL COST
- 1.3 MANUFACTURING PROCESS FLOW DIAGRAM
- 1.4 MANUFACTURING EQUIPMENT COST
- 1.5 MANUFACTURING MANPOWER COST
- 1.6 INSTALLATION COST

2.0 LIQUID ARGON DRAWINGS

- 2.1 PARAMETER TABLE
- 2.2 GENERAL ARRANGEMENT & DETAIL DRAWINGS

3.0 CALCULATIONS

- 3.1 WEIGHT & VOLUME CALCULATIONS
- 3.2 ACTIVE THICKNESS CALCULATION

4.0 VENDOR'S PRICE QUOTE

1.1 LAr FCAL COST ESTIMATE

LIQUID ARGON OPTION FORWARD CALORIMETER

COST ESTIMATE SUMMARY

	ENGR/DESIGN M&S and INSPECTION	PROC/FAB MATERIAL	LABOR ASSEMBLY	LABOR INSTALLATION	SUBTOTAL
CONSTRUCTION	$2,332K	$7,103K	$883K	$20K	$10,338K
R&D	$708K	$165K	$37K	$0K	$910K
ENGINEERING	$282K	$0K	$0K	$0K	$282K
SUBTOTAL	$3,323K	$7,268K	$920K	$20K	$11,530K

	COST	PERCENTAGE
R&D	$910K	11.37%
EDIA	$2,614K	32.66%
CONSTRUCTION	$8,006K	
CONTINGENCY	$3,756K	35.37%
TOTAL	$15,286K	

Liquid Argon Forward Calorimeter WBS Costs

Liquid Argon Forward Calorimeter WBS Costs

WBS	Item	Engineering/design Labor my	Engineering/design Rate k$/my	Engineering/design Total k$	M&S Material k$	Inspection/Admin Labor my	Inspection/Admin Rate k$/my	Inspection/Admin Total k$	Proc/Fab Material k$	Assembly Labor my	Assembly Rate k$/my	Assembly Subtotal k$	Assembly Material k$	Assembly Total k$	Installation/Assembly Labor my	Installation/Assembly Rate k$/my	Installation/Assembly Subtotal k$	Installation/Assembly Material k$	Installation/Assembly Total k$	Totals Labor k$	Totals Material k$	Totals Subtotal k$	Totals Contng k$	Totals Total k$
5.2.2.5.																								
	Total Liquid Argon FCAL Cost	22.2		3010.4	150.5	1.51		161.8	7267.6	16.7		920.0	0.0	920.0	0.3		19.6	0.0	19.6	4111.7	7416.1	11528.8	3755.8	15285.6
0.2.2.0	LAr Forward Calorimeter Const	16.7	131	2067.1	103.4	1.51	107	161.8	7102.7	16.1	55	883.3	0.0	883.3	0.3		19.6	0.0	19.6	3131.7	7206.1	10337.8	3410.0	13747.8
0.2.2.1	Modules	5.2		668.0	33.3	0.70		74.8	6150.7	15.3		840.9	0.0	840.9	0.3		19.6	0.0	19.6	1581.7	6184.0	7765.8	2423.3	10389.0
0.2.2.1.1	SS Tubes	0.1	108	9	0	0.00	0	0	459											9	460	469	117	586
0.2.2.1.2	Tube Coating Material	0.0	0	0	0	0.00	0	0	220											0	220	220	42	262
0.2.2.1.3	Quartz Fiber	0.0	0	0	0	0.00	0	0	330											0	330	330	69	399
0.2.2.1.4	Absorber Plates & Rods (W)	0.5	108	54	3	0.00	0	0	3983											54	3983	4037	1534	5571
0.2.2.1.5	Module Barrels Components	0.6		63.0	3.2	0.00	0.0	0.0	199.5											63.0	199.7	262.7	68.3	331.0
0.2.2.1.5.1	Module Barrel	0.2	108	18	1	0.00	0	0	9											18	10	28	8	36
0.2.2.1.5.2	Bottom Plates	0.3	108	27	1	0.00	0	0	15											27	16	43	13	56
0.2.2.1.5.3	Inner Tube Spacers	0.1	108	9	0	0.00	0	0	166											9	166	175	42	217
0.2.2.1.5.4	Top Plates	0.1	108	9	0	0.00	0	0	7											9	8	17	5	22
0.2.2.1.6	Module Support Structure	0.2	108	18	1	0.00	0	0	39											18	40	58	16	74
0.2.2.1.7	Readout Assy	0.4	108	45.0	2.3	0.14	0	15.1	101.8											60	104	164	45	209
0.2.2.1.7.1	Preamps	0.1	108	9	0	0.02	107	2	76											11	79	90	24	114
0.2.2.1.7.2	G-10 Plates	0.3	108	27	1	0.06	107	9	11											36	12	48	13	61
0.2.2.1.7.3	Stripline Cables	0.1	108	9	0	0.04	107	4	13											13	13	26	8	34
0.2.2.1.8	Assembly	3.7	0.0	398.0	19.8	0.47	0.0	50.8	410.0	15.3		840.9	0.0	840.9						1287.7	429.8	1717.5	559.2	2276.7
0.2.2.1.8.1	Station One	0.3		36.0	1.8	0.04		4.1	30.0	7.7		424.8	0.0	424.8						464.7	31.8	496.5	161.0	657.5
0.2.2.1.8.1.1	Station One Assy	0.3	108	36	2	0.04	107	4		7.7	55	425		425						465	2	467	149	616
0.2.2.1.8.1.2	Inner Tube Assembly Stand								15											0	15	15	6	21
0.2.2.1.8.1.3	Tube Coating Stand								15											0	15	15	6	21
0.2.2.1.8.2	Station two	0.3		36	2	0.02		2	15	2.9		157	0	157						195	17	212	69	280
0.2.2.1.8.2.1	Station Two assy	0.3	108	36	2	0.02	107	2		2.9	55	157		157						195	2	197	63	260
0.2.2.1.8.2.2	Tube Assembly Stand								15											0	15	15	6	21
0.2.2.1.8.3	Station three	1.0		108.0	5.4	0.08		8.9	64.0	3.8		208.8	0.0	208.8						324	89	393	130	523
0.2.2.1.8.3.1	Station Three assy	1.0	108	108	5	0.08	107	9		3.8	55	207		207						324	5	329	105	434
0.2.2.1.8.3.2	Module Assembly Stand								45											0	45	45	18	63
0.2.2.1.8.3.3	Lifting Fixture								15											0	15	15	6	21
0.2.2.1.8.3.4	Personnel Platform								4											0	4	4	1	5
0.2.2.1.8.4	Station Four	1.0		108.0	5.4	0.08		8.9	58.0	0.1		7.2	0.0	7.2						124	61	185	62	246
0.2.2.1.8.4.1	Station Four assy	1.0	108	108	5	0.08	107	9		0.1	55	7		7						124	5	129	41	171
0.2.2.1.8.4.2	Module/Support Assembly Stand								25											0	25	25	10	35
0.2.2.1.8.4.3	Lifting Fixture								25											0	25	25	10	35
0.2.2.1.8.4.4	Personnel Platform								6											0	6	6	1	7
0.2.2.1.8.5	Station Five	0.5		54.0	2.7	0.08		8.9	46.0	0.3		18.2	0.0	18.2						81	49	130	44	174
0.2.2.1.8.5.1	Station Five assy	0.5	108	54	3	0.08	107	9		0.3	55	18		18						81	3	84	27	111
0.2.2.1.8.5.2	Subassembly Test Stand								25											0	25	25	10	35
0.2.2.1.8.5.3	Temporary Cabling								15											0	15	15	6	21
0.2.2.1.8.5.4	Personnel Platform								6											0	6	6	1	7
0.2.2.1.8.6	Special Purpose Equipment	0.3		27	1	0.08		9	135	0.5		28	0	28						63	136	200	73	272
0.2.2.1.8.6.1	Assembly Support Labor	0.3	108	27	1	0.08	107	9		0.5	55	28		28						63	1	65	20	85
0.2.2.1.8.6.2	Milling Machine								30											0	30	30	12	42
0.2.2.1.8.6.3	Tube Swaging Machine								40											0	40	40	18	58
0.2.2.1.8.6.4	Dimensional Insp. Fixture								30											0	30	30	12	42
0.2.2.1.8.6.5	Portable Readout Test Stand								20											0	20	20	8	28
0.2.2.1.8.6.6	Temporary Wiring Harnesses								10											0	10	10	4	14
0.2.2.1.8.6.7	Op Test Sources/Counters								5											0	5	5	2	7
0.2.2.1.8.7	Assembly Equipment	0.3		27	1	0.08		9	64	0.0		0	0	0						36	65	101	21	122
0.2.2.1.8.7.1	General Assembly Equipment	0.3	108	27	1	0.08	107	9		0.0	0	0		0						36	1	37	9	47
0.2.2.1.8.7.2	Clothing								10											0	10	10	2	12
0.2.2.1.8.7.3	Cleaning Supplies								5											0	5	5	1	6
0.2.2.1.8.7.4	Work Tables								9											0	9	9	2	11
0.2.2.1.8.7.5	Tools								10											0	10	10	2	12
0.2.2.1.8.7.6	Temporary Use Items								20											0	20	20	4	24
0.2.2.1.8.7.7	Handling Carts (10-50 T)								10											0	10	10	2	12

Liquid Argon Forward Calorimeter WBS Costs

Liquid Argon Forward Calorimeter WBS Costs

		Engineering/design			M&S	Inspection/Admin			Proc/Fab	Assembly					Installation/Assembly					Totals				
		Labor	Rate	Total	Material	Labor	Rate	Total	Material	Labor	Rate	Subtotal	Material	Total	Labor	Rate	Subtotal	Material	Total	Labor	Material	Subtotal	Contng	Total
WBS	Item	my	k$/my	k$	k$	my	k$/my	k$	k$	my	k$/my	k$	k$	k$	my	k$/my	k$	k$	k$	k$	k$	k$	k$	k$
0.2.1.1.9	Calibration Loops	0.8	108	81	4	0.08	107	9	414											90	418	508	173	681
0.2.1.2	Assembly Fit-Up	0.3		36.0	1.8	0.08		8.9	58.0	0.8		42.4	0.0	42.4						87.3	59.8	147.1	47.6	194.7
0.2.1.2.1	Assembly Fit-Up	0.3	0	36.0	1.8	0.08	0	8.9	58.0	0.8		42.4	0.0	42.4						87.3	59.8	147.1	47.6	194.7
0.2.1.2.1.1	Station Six	0.3		36.0	1.8	0.08		8.9	58.0	0.8		42.4	0	42.4						87.3	59.8	147.1	47.6	194.7
0.2.1.2.1.1.1	Station Six assy	0.3	108	36	2	0.08	107	9	0	0.8	55	42		42						87	2	89	29	118
0.2.1.2.1.1.2	Assembly Fit-up Stand								50											0	50	50	17	67
0.2.1.2.1.1.3	Personnel Platforms								8											0	8	8	3	11
0.2.1.3	Electronics	0.5		62.0	3.1	0.08		8.9	434.0	0.0		0.0	0.0	0.0						70.9	437.1	508.0	167.6	675.7
0.2.1.3.1	Electronic Readout	0.5	124	62	3	0.08	107	9	434											71	437	508	168	676
0.2.1.4	Thermal Control	0.0		0	0	0.00		0	0	0.0		0	0	0						0	0	0	0	0
0.2.1.4.1	Heat Transfer System	0.0	0	0	0	0.00	107	0	0											0	0	0	0	0
0.2.1.4.2	Heat Exchangers	0.0	0	0	0	0.00	107	0	0											0	0	0	0	0
0.2.1.5	Beam Test/Calibration	0.8		102.9	5.1	0.28		30.0	350.0	0.0		0	0	0						132.9	355.1	488.0	127.8	615.8
0.2.1.5.1	Test Stands	0.3	124	37	2	0.08	107	9	250											46	252	298	74	372
0.2.1.5.2	Manpower	0.0	0	0	0	0.10	107	11												11	0	11	3	14
0.2.1.5.3	Beam Calibration System	0.5	124	66	3	0.10	107	11	100											76	103	180	50	230
0.2.1.6	FCAL Installation	0.6		122.2	8.1	0.37		39.2	110.0	0.0		0.0	0	0.0	0.3		19.8	0	19.8	181.0	118.1	297.1	91.6	388.8
0.2.1.6.1	Manpower	0.4	154	64	3	0.17	107	18							0.3	59	20		20	102	3	105	29	134
0.2.1.6.2	Installation Equipment	0.6	0	58.0	2.9	0.20	0	21.4	110.0						0.0		0	0	0	79.4	112.9	192.3	64.2	256.5
0.2.1.6.2.1	Temporary Rails	0.3	108	27	1	0.08	107	9	40											36	41	77	26	103
0.2.1.6.2.2	Transport Cart	0.1	124	10	1	0.04	107	4	20											15	21	35	12	47
0.2.1.6.2.3	Temporary Bracing	0.1	124	10	1	0.04	107	4	25											15	26	40	13	53
0.2.1.6.2.4	Crane	0.1	124	10	1	0.04	107	4	25											15	26	40	13	53
0.2.1.7	Subsystem Management	7.0		1078.0	53.9										0.0		0	0	0	1078.0	53.9	1131.9	350.1	1482.0
0.2.1.7.1	Project Management	4.0	154	616	31															616	31	647	201	847
0.2.1.7.2	Resource Management	1.0	154	154	8															154	8	162	50	212
0.2.1.7.3	ES&H	0.5	154	77	4															77	4	81	24	105
0.2.1.7.4	Quality Assurance	0.5	154	77	4															77	4	81	23	104
0.2.1.7.5	System Integration	1.0	154	154	8															154	8	162	52	213
1.2.1.0	LAr Forward Calorimeter R&D	4.3	0.0	674.7	33.7				184.8	0.7		36.7	0.0	36.7						711.3	188.8	900.0	345.8	1255.7
1.2.1.1	Material Tests	1.6		252.8	12.6				20.0	0.0		0.0	0.0	0.0	0.0		0.0	0.0	0.0	252.8	32.6	285.4	108.5	393.9
1.2.1.1.1	Liquid Argon Testing	1.0	158	158	8				5											158	13	171	65	236
1.2.1.1.2	Quartz Fiber Testing	0.3	158	47	2				5											47	7	55	21	76
1.2.1.1.3	Tube Surface Testing	0.3	158	47	2				10											47	12	60	23	82
1.2.1.2	EM Module Prototype	1.7		264	13				125	1		37	0	37						301	138	439	167	605
1.2.1.2.1	Tower Assembly	0.5	158	79	4				20	0.2	55	9		9						88	24	112	43	154
1.2.1.2.2	Electronics	0.5	158	79	4				30	0.2	55	9		9						88	34	122	46	169
1.2.1.2.3	Assembly/Test Frame	0.3	158	47	2				15	0.1	55	5		5						52	17	69	26	96
1.2.1.2.4	Thermal Control	0.3	158	40	2				10	0.1	55	5		5						44	12	56	21	77
1.2.1.2.5	Beam Testing	0.1	158	16	1				50	0.2	55	9		9						28	51	79	30	109
1.2.1.3	Manufacturing Development	1.0		158	8				20	0	0	0	0	0						158	28	186	71	257
1.2.1.3.1	Tube Assembly	0.5	158	79	4				10											79	14	93	35	128
1.2.1.3.2	Tube / Module Connection	0.5	158	79	4				10											79	14	93	35	128

Liquid Argon Forward Calorimeter WBS Costs

WBS	Item	Engineering/design Labor my	Engineering/design Rate k$/my	Engineering/design Total k$	M&S Material k$	Inspection/Admin Labor my	Inspection/Admin Rate k$/my	Inspection/Admin Total k$
2 2 2 .6	LAr FCAL Concep/Pre Design	2.2	124	268	13			
2 2 2 .1	Preparation of Lot	0.6		72	4			
2 2 2 .1 .1	Conceptual Design	0.3	124	31	2			
2 2 2 .1 .2	Costing Studies	0.3	124	31	2			
2 2 2 .1 .3	Document Preparation	0.1	124	10	1			
2 2 2 .2	Prep of Tech Prop.	1.6		196	10			
2 2 2 .2 .1	Conceptual Design	0.5	124	62	3			
2 2 2 .2 .2	Costing Studies	0.3	124	41	2			
2 2 2 .2 .3	Manufacturing Studies	0.3	124	41	2			
2 2 2 .2 .4	Installation Studies	0.3	124	31	2			
2 2 2 .2 .5	Prep of Tech Prop	0.2	124	21	1			

R&D	909.899	11.37%
EDIA	2614.33	32.66%
Construct	8005.61	
Contingen	3755.78	35.37%
Total	15285.6	

Liquid Argon Forward Calorimeter WBS Costs

WBS	Item	Proc/Fab Material k$	Assembly Labor my	Assembly Rate k$/my	Assembly Subtotal k$	Assembly Material k$	Assembly Total k$	Installation/Assembly Labor my	Installation/Assembly Rate k$/my	Installation/Assembly Subtotal k$	Installation/Assembly Material k$	Installation/Assembly Total k$	Totals Labor k$	Totals Material k$	Totals Subtotal k$	Totals Contang k$	Totals Total k$
2 2 2 .6	LAr FCAL Concep/Pre Design												268	13	282	0	282
2 2 2 .1	Preparation of Lot												72	4	76	0	76
2 2 2 .1 .1	Conceptual Design												31	2	33	0	33
2 2 2 .1 .2	Costing Studies												31	2	33	0	33
2 2 2 .1 .3	Document Preparation												10	1	11	0	11
2 2 2 .2	Prep of Tech Prop.												196	10	206	0	206
2 2 2 .2 .1	Conceptual Design												62	3	65	0	65
2 2 2 .2 .2	Costing Studies												41	2	43	0	43
2 2 2 .2 .3	Manufacturing Studies												41	2	43	0	43
2 2 2 .2 .4	Installation Studies												31	2	33	0	33
2 2 2 .2 .5	Prep of Tech Prop												21	1	22	0	22

Bottoms Up	$8,459K
Specific Analogy	$0K
Parametric Study	$779K
Revision UpDate	$0K
Trend Analysis	$0K

WBS	Item	No.	Units	Estimate Type	Risk factors Technic	Cost	Schedule	Risk percentages Tech	Cost	Schedule	Tot Cont Prec
5 2 2 6	Total Liquid Argon FCAL Cost										
0 2 .0	LAr Forward Calorimeter Const										
0 2 .1	Modules										
0 2 .1 .1	SS Tubes		M	BU	2	4	3	2%	3%	3%	25%
0 2 .1 .2	Tube Coating Material		M	BU	2	4	1	2%	3%	3%	19%
0 2 .1 .3	Quartz Fiber		M	BU	2	4	1	3%	3%	3%	21%
0 2 .1 .4	Absorber Plates & Rods (W)		M^2	BU	5	3	3	4%	3%	3%	38%
0 2 .1 .5	Module Barrels Components										
0 2 .1 .5 .1	Module Barrel		MTons	BU	5	4	1	3%	3%	3%	30%
0 2 .1 .5 .2	Bottom Plates		MTons	BU	5	4	1	3%	3%	3%	30%
0 2 .1 .5 .3	Inner Tube Spacers		MTons	BU	3	4	1	3%	3%	3%	24%
0 2 .1 .5 .4	Top Plates		MTons	BU	5	4	1	3%	3%	3%	30%
0 2 .1 .6	Module Support Structure		MTons	BU	4	4	1	3%	3%	3%	27%
0 2 .1 .7	Readout Assy		MTons	BU	4	4	1	3%	3%	3%	27%
0 2 .1 .7 .1	Preamps		MTons	BU	4	4	1	3%	3%	3%	27%
0 2 .1 .7 .2	G-10 Plates		MTons	BU	4	4	1	3%	3%	3%	27%
0 2 .1 .7 .3	Stripline Cables		MTons	BU	4	5	1	3%	3%	3%	30%
0 2 .1 .8	Assembly										
0 2 .1 .8 .1	Station one										
0 2 .1 .8 .1 .1	Station One assy	1	Each	BU	4	3	1	4%	5%	1%	32%
0 2 .1 .8 .1 .2	Inner Tube Assembly Stand	1	Each	BO	3	5	1	6%	4%	1%	39%
0 2 .1 .8 .1 .3	Tube Coating Stand	1	Each	BO	3	5	1	6%	4%	1%	39%
0 2 .1 .8 .2	Station two										
0 2 .1 .8 .2 .1	Station Two assy	1	Each	BU	4	3	1	4%	5%	1%	32%
0 2 .1 .8 .2 .2	Tube Assembly Stand	1	Each	BO	3	5	1	6%	4%	1%	39%
0 2 .1 .8 .3	Station three										
0 2 .1 .8 .3 .1	Station Three assy	1	Each	BU	4	3	1	4%	5%	1%	32%
0 2 .1 .8 .3 .2	Module Assembly Stand	3	Each	BO	3	5	1	6%	4%	1%	39%
0 2 .1 .8 .3 .3	Lifting Fixture	1	Each	BO	3	5	1	6%	4%	1%	39%
0 2 .1 .8 .3 .4	Personnel Platform	2	Each	BO	3	5	1	4%	2%	1%	23%
0 2 .1 .8 .4	Station Four										
0 2 .1 .8 .4 .1	Station Four assy	1	Each	BU	4	3	1	4%	5%	1%	32%
0 2 .1 .8 .4 .2	Module/Support Assembly Stand	1	Each	BO	3	5	1	6%	4%	1%	39%
0 2 .1 .8 .4 .3	Lifting Fixture	1	Each	BO	3	5	1	6%	4%	1%	39%
0 2 .1 .8 .4 .4	Personnel Platform	2	Each	BO	3	5	1	4%	2%	1%	23%
0 2 .1 .8 .5	Station Five										
0 2 .1 .8 .5 .1	Station Five assy	1	Each	BU	4	3	1	4%	5%	1%	32%
0 2 .1 .8 .5 .2	Subassembly Test Stand	1	Each	BO	3	5	1	6%	4%	1%	39%
0 2 .1 .8 .5 .3	Subassembly Test Stand	1	Each	BO	3	5	1	6%	4%	1%	39%
0 2 .1 .8 .5 .4	Personnel Platform	2	Each	BO	3	5	1	4%	2%	1%	23%
0 2 .1 .8 .6	Special Purpose Equipment										
0 2 .1 .8 .6 .1	Assembly Support Labor	1	Each	BU	5	2	1	4%	5%	1%	31%
0 2 .1 .8 .6 .2	Milling Machine	2	Each	BO	3	5	1	6%	4%	1%	39%
0 2 .1 .8 .6 .3	Tube Swaging Machine	2	Each	BO	3	5	1	6%	4%	1%	39%
0 2 .1 .8 .6 .4	Dimensional Insp. Fixture	1	Each	BO	3	5	1	6%	4%	1%	39%
0 2 .1 .8 .6 .5	Portable Readout Test Stand	1	Each	BO	3	5	1	6%	4%	1%	39%
0 2 .1 .8 .6 .6	Temporary Wiring Harnesses	1	Each	BO	3	5	1	6%	4%	1%	39%
0 2 .1 .8 .6 .7	Op Test Sources/Counters	1	Each	BO	3	5	1	6%	4%	1%	39%
0 2 .1 .8 .7	Assembly Equipment										
0 2 .1 .8 .7 .1	General Assembly Equipment	1	Each	BU	3	3	1	4%	4%	1%	25%
0 2 .1 .8 .7 .2	Clothing	1	Each	BO	2	3	1	3%	3%	1%	18%
0 2 .1 .8 .7 .3	Cleaning Supplies	1	Each	BO	2	3	1	3%	3%	1%	18%
0 2 .1 .8 .7 .4	Tools	1	Each	BO	3	3	1	3%	3%	1%	19%
0 2 .1 .8 .7 .5	Work Tables	3	Each	BO	3	3	1	3%	3%	1%	19%
0 2 .1 .8 .7 .6	Temporary Use Items	1	Each	BO	3	3	1	3%	3%	1%	19%
0 2 .1 .8 .7 .7	Handling Carts (10-50 T)	2	Each	BO	3	3	1	3%	3%	1%	19%

WBS	Item	No.	Units	Estimate Type	Risk factors Technic	Cost	Schedule	Risk percentages Tech	Cost	Schedule	Tot Cont Proc
0 .2.2 .1 .0	Calibration Loops	800	Each	BD	3	5	2	4%	4%	1%	34%
0 .2.2 .2	Assembly Fit-Up										
0 .2.2 .2 .1	Assembly Fit-Up										
.0 .2.2 .2 .1 .1	Station Six										
0 .2.2 .2 .1 .1 .1	Station Six assy	1	Each	BU	4	5	1	4%	3%	1%	32%
0 .2.2 .2 .1 .1 .2	Assembly Test Stand	2	Each	BD	3	5	1	4%	4%	1%	33%
0 .2.2 .2 .1 .1 .3	Personnel Platforms	2	Each	BD	3	5	1	4%	4%	1%	33%
0 .2.2 .3	Electronics										
0 .2.2 .3 .1	Electronic Readout	1736	Each	PS	3	5	1	4%	4%	1%	33%
0 .2.2 .4	Thermal Control										
0 .2.2 .4 .1	Heat Transfer System	0	Each	SA	4	5	1	4%	3%	1%	32%
0 .2.2 .4 .2	Heat Exchangers	0	Each	SA	4	5	1	4%	3%	1%	32%
0 .2.2 .5	Beam Test/Calibration										
0 .2.2 .5 .1	Test Stands	6	Each	BD	2	4	3	3%	4%	1%	25%
0 .2.2 .5 .2	Manpower	6	Each	BD	2	4	3	2%	4%	3%	29%
.0 .2.2 .5 .3	Beam Calibration System	6	Each	BD	2	4	3	3%	4%	2%	28%
0 .2.2 .6	FCAL Installation										
0 .2.2 .6 .1	Manpower	1	Each	BD	3	3	5	4%	2%	2%	28%
0 .2.2 .6 .2	Installation Equipment	1	Each		4	1	5	4%	2%	1%	23%
0 .2.2 .6 .2 .1	Temporary Rails	10000	Lbs	PS	5	3	2	4%	4%	1%	34%
0 .2.2 .6 .2 .2	Transport Cart	1	Each	BD	5	3	1	4%	4%	1%	33%
.0 .2.2 .6 .2 .3	Temporary Bracing	1	Each	BD	5	3	1	4%	4%	1%	33%
0 .2.2 .6 .2 .4	Crane	1	Each	BD	5	3	1	4%	4%	1%	33%
0 .2.2 .7	Subsystem Management										
.0 .2.2 .7 .1	Project Management	1	Each	BD	5	1	4	5%	2%	1%	31%
.0 .2.2 .7 .2	Resource Management	1	Each	BD	5	1	4	5%	2%	1%	31%
0 .2.2 .7 .3	ES&H	1	Each	BD	5	1	3	5%	2%	1%	30%
0 .2.2 .7 .4	Quality Assurance	1	Each	BD	5	1	2	5%	2%	1%	29%
0 .2.2 .7 .5	System Integration	1	Each	BD	5	1	5	5%	2%	1%	32%
1 .2.2 .0	LAr Forward Calorimeter R&D										
1 .2.2 .1	Material Tests										
.1 .2.2 .1 .1	Liquid Argon Testing	1	Each	BD	4	3	2	5%	4%	3%	38%
1 .2.2 .1 .2	Quartz Fiber Testing	1	Each	BD	4	3	2	5%	4%	3%	38%
.1 .2.2 .1 .3	Tube Surface Testing	1	Each	BD	4	3	2	5%	4%	3%	38%
.1 .2.2 .2	EM Module Prototype										
.1 .2.2 .2 .1	Tower Assembly	1	Each	BU	4	3	2	5%	4%	3%	38%
.1 .2.2 .2 .2	Electronics	1	Each	BD	4	3	2	5%	4%	3%	38%
.1 .2.2 .2 .3	Assembly/Test Frame	1	Each	BD	4	3	2	5%	4%	3%	38%
.1 .2.2 .2 .4	Thermal Control	1	System	BD	4	3	2	5%	4%	3%	38%
.1 .2.2 .2 .5	Beam Testing	1	System	BD	4	3	2	5%	4%	3%	38%
1 .2.2 .3	Manufacturing Development										
.1 .2.2 .3 .1	Tube Assembly	1	System	BD	4	3	2	5%	4%	3%	38%
.1 .2.2 .3 .2	Tube / Module Connection	1	System	BD	4	3	2	5%	4%	3%	38%

WBS	Item	No.	Units	Estimate Type	Risk factors Techn	Cost	Schedule	Risk percentages Tech	Cost	Schedule	Tot Cont Prec
2 2 2 0	LAr FCAL Concep/Pre Design										
2 2 2 .1	Preparation of LoI										
2 2 2 .1 .1	Conceptual Design			BD							0%
2 2 2 .1 .2	Costing Studies			BD							0%
2 2 2 .1 .3	Document Preparation			BD							0%
2 2 2 .2	Prep of Tech Prop.										
2 2 2 .2 .1	Conceptual Design			BD							0%
2 2 2 .2 .2	Costing Studies			BD							0%
2 2 2 .2 .3	Manufacturing Studies			BD							0%
2 2 2 .2 .4	Installation Studies			BD							0%
2 2 2 .2 .5	Prep of Tech Prop			BD							0%

Bottoms Up
Specific Analogy
Parametric Study
Revision UpDate
Trend Analysis

1.2 MATERIAL COST

LAr Forward Calorimeter Material Cost

(for two Forward Calorimeters)

TOTAL:	$5,344,458

Cost of Module Barrels

Material	Quantity	Units	Cost/Unit	
Barrel Meterial	1,587	Lbs	$5.50	$8,730
Top/Bottom Plates	1,852	Lbs	$12.00	$22,222
Inner Tube Spacers	165,582	Each	$1.00	$165,582
Total				$196,535

Cost of SS Tubes & Quartz Fiber

Material	Quantity	Units	Cost/Unit	
5.0 mm SS Tubing	11,280	Ft	$2.00	$22,559
5.4 & 5.44 mm SS Tubing	75,869	Ft	$2.05	$155,532
5.84& 5.9 mm SS Tubing	98,612	Ft	$2.10	$207,086
6.3 mm SS Tubing	34,022	Ft	$2.18	$74,169
Tube Coating Material	219,783	Ft	$1.00	$219,783
Quartz Fiber	329,675	Ft	$1.00	$329,675
Total				$1,008,804

Cost of Support Structure & Cryostat

Material	Quantity	Units	Cost/Unit	
Cryostat	27,117	Lbs	$0.00	$0 *
Module Support	5,952	Lbs	$6.60	$39,286
Total				$39,286

* this will be paid by central calorimeter.

Cost of Absorber

Material	Quantity	Units	Cost/Unit	
W Rods & Absorber	66,182	Lbs	$60.41	$3,998,060
Tungsten balls	14,771	Lbs	$0.00	$0 **
Eutectic	7,275	Lbs	$0.00	$0 **
Total				$3,998,060

** this will be paid by Muon Group.

Cost of Electrical components

Material	Quantity	Units	Cost/Unit	
Preamps	1,736	Channels	$45.00	$78,120
G-10 Plates	72	Plates	$100.00	$7,200
G-10 Plates	72	Plates	$50.00	$3,600
Stripline Cables	2,337	FT	$5.50	$12,853
Total				$101,773

S. M. Chae/ORNL/4-10-92

1.3 MANUFACTURING PROCESS FLOW DIAGRAM

Liquid Argon Forward Calorimeter Manufacturing Process

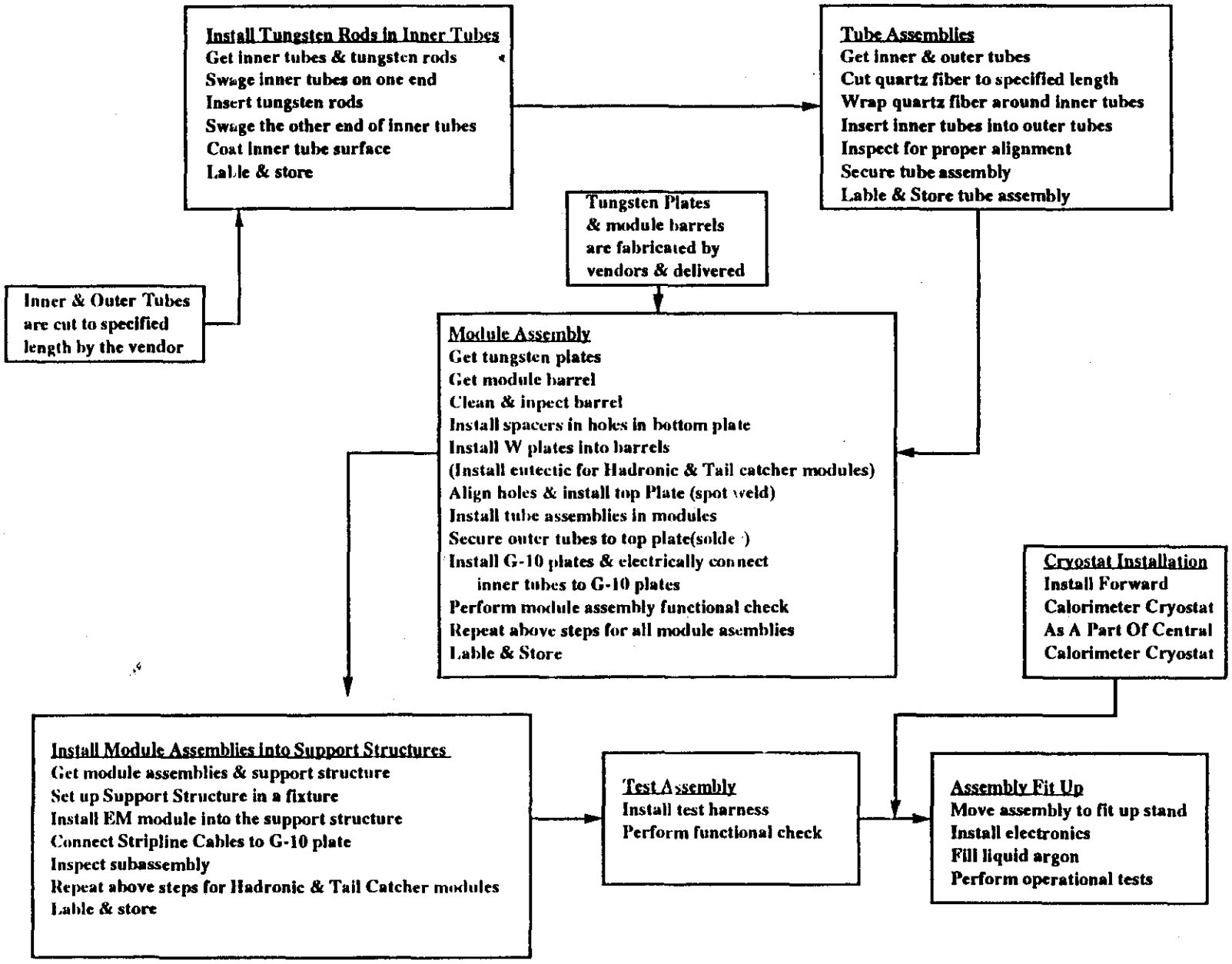

S. M. Chae

STATION #1

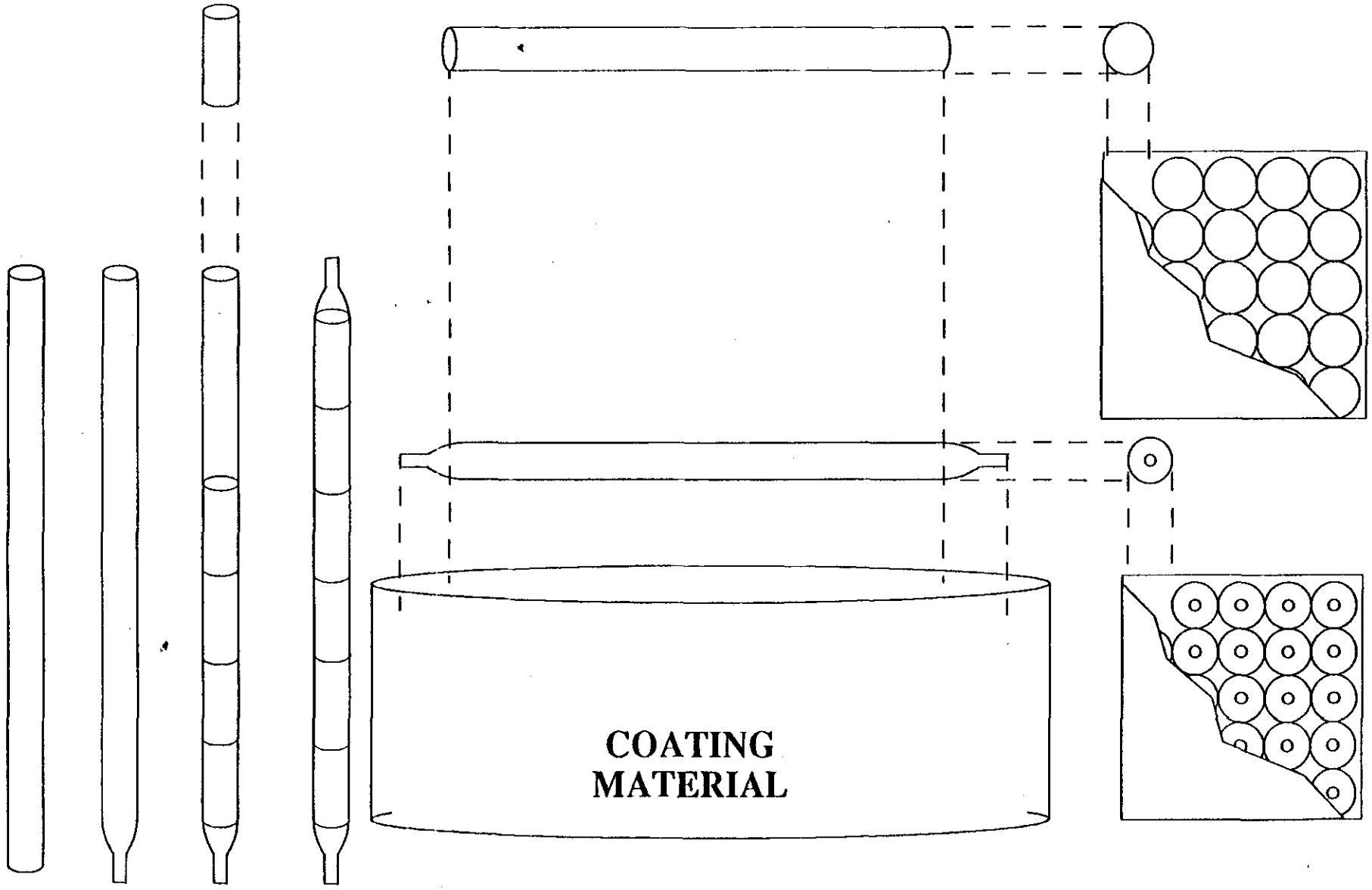

STATION #2

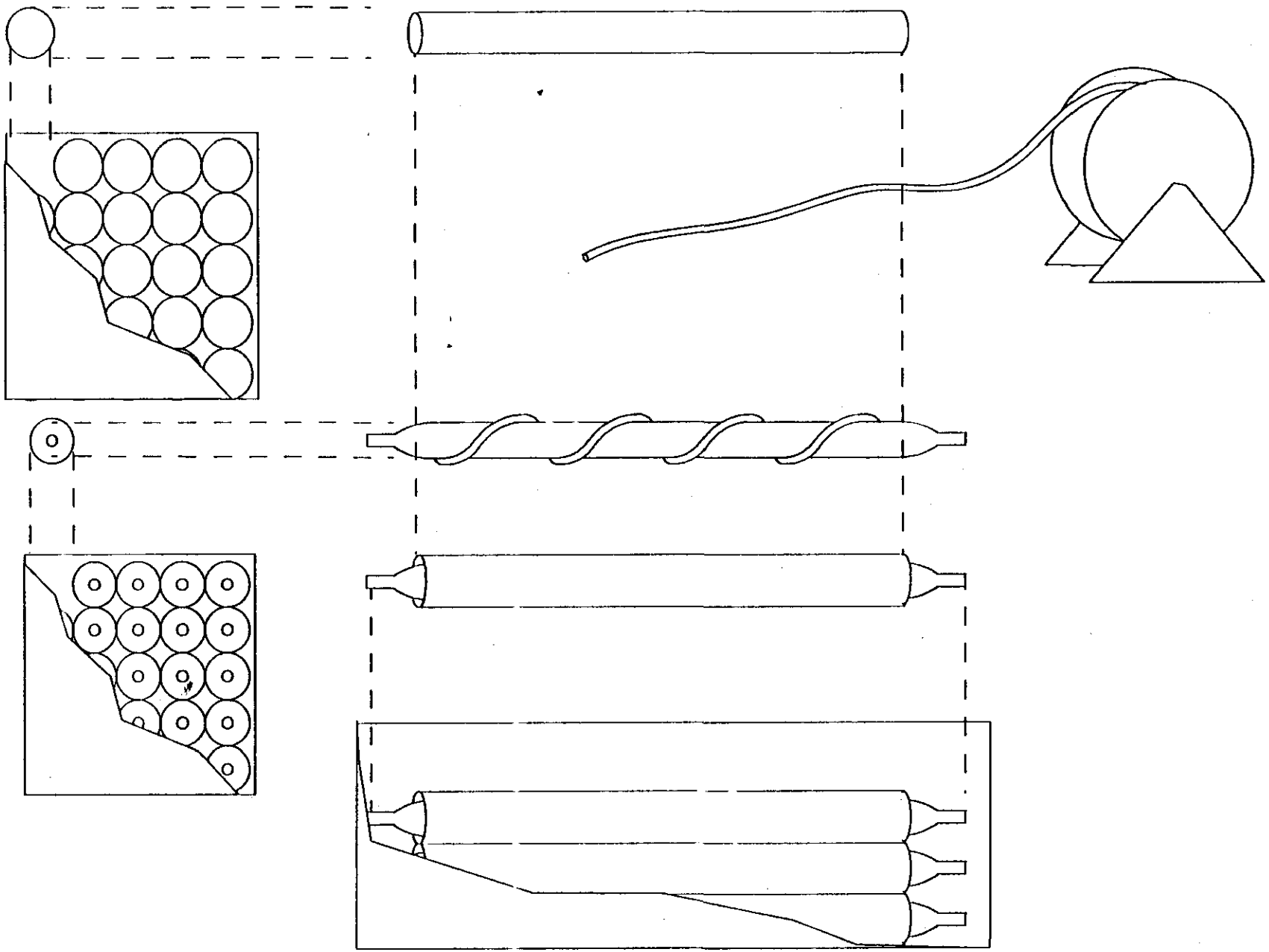

STATION # 3 (Part 1)

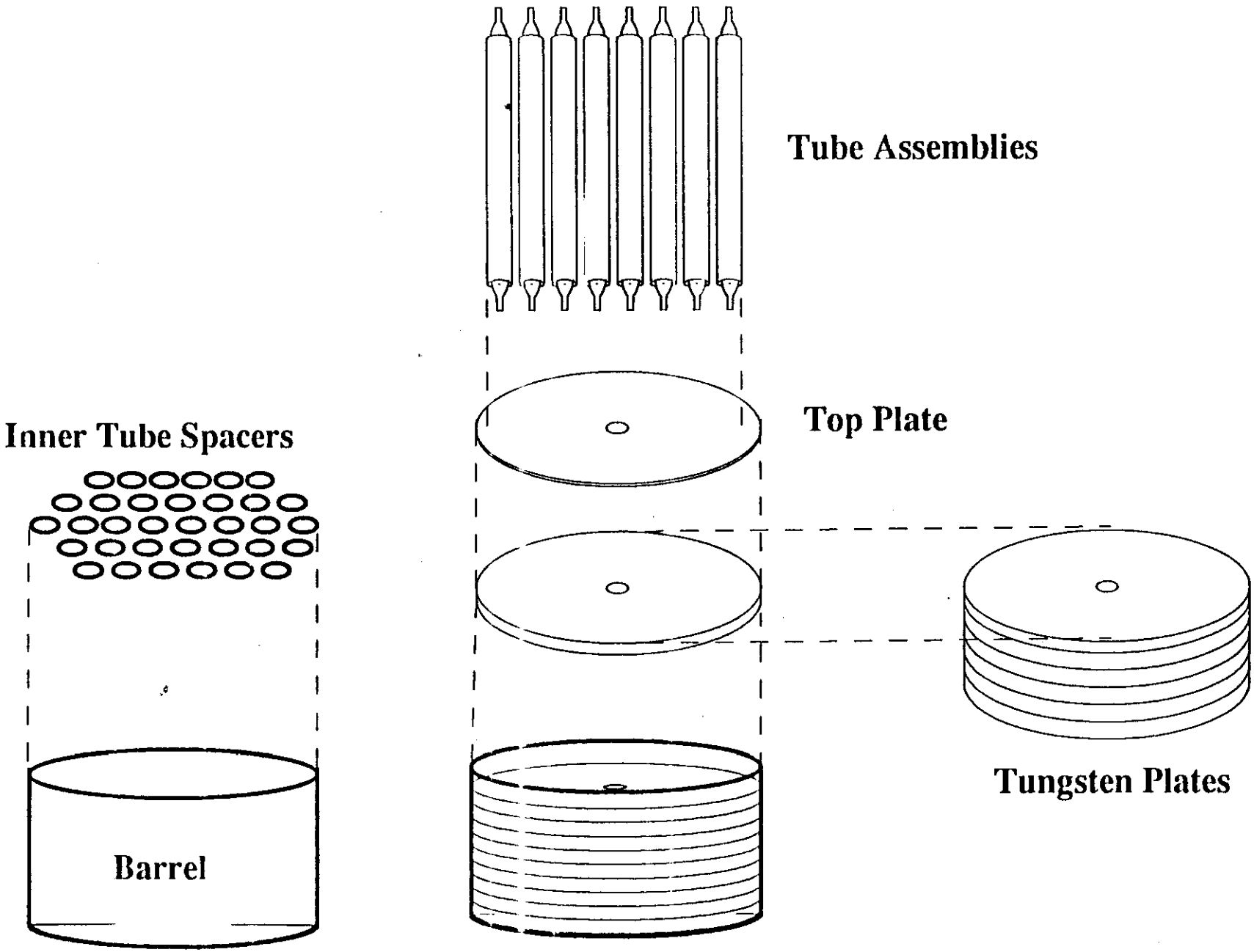

STATION # 3 (Part 2)

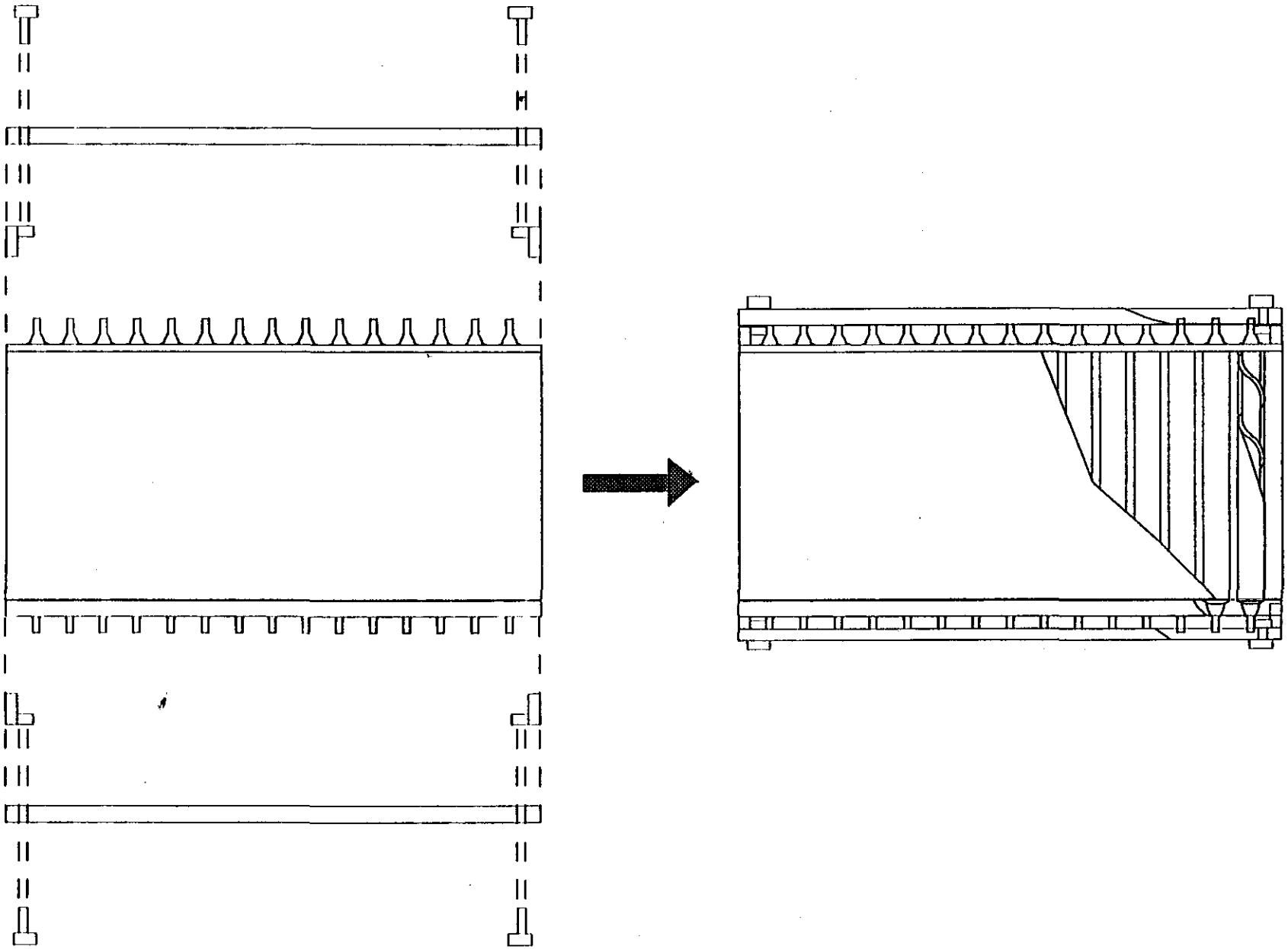

STATION # 4

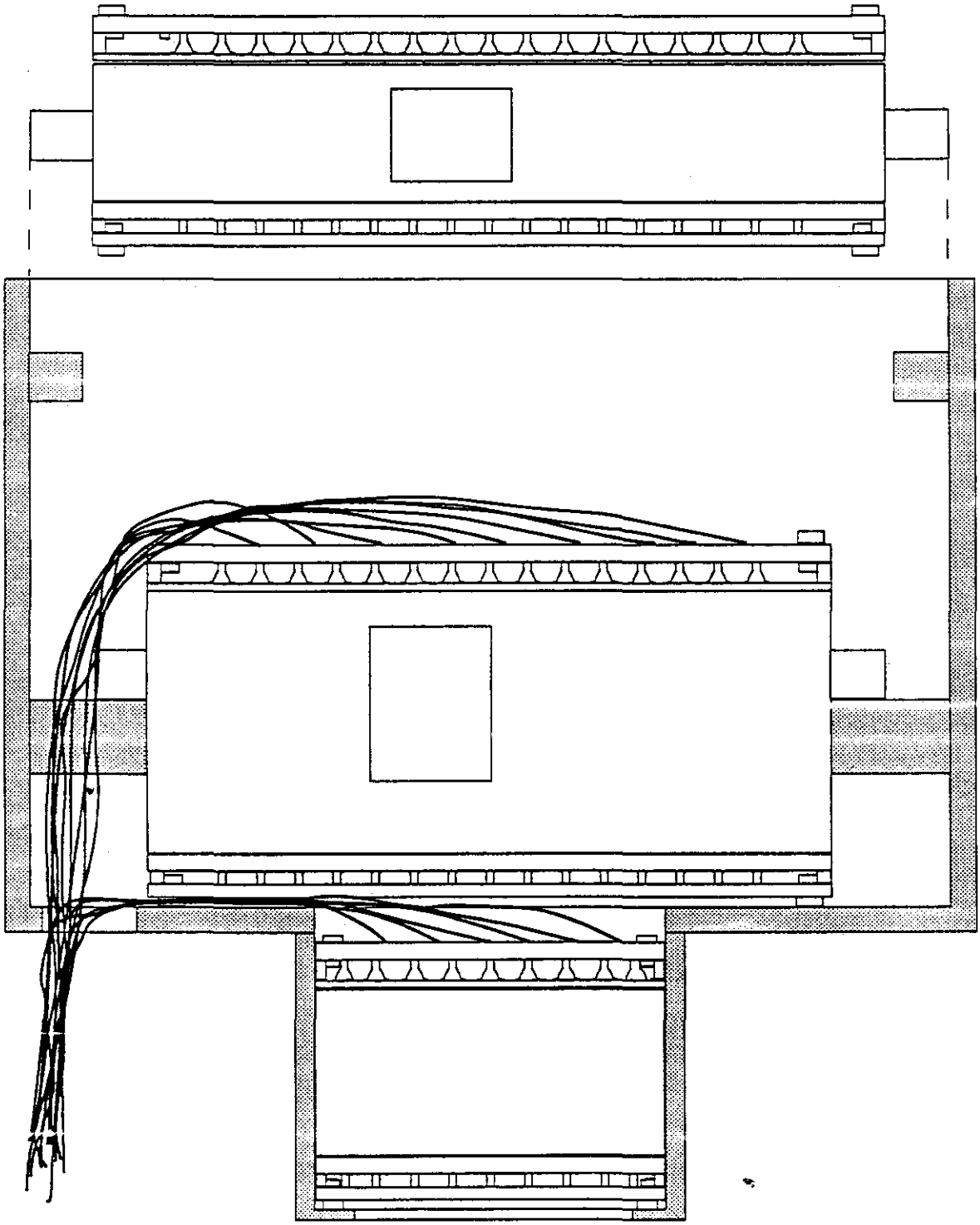

1.4 MANUFACTURING EQUIPMENT COST

Manufacturing Equipment for LAr Forward Calorimeter

	Equipment	Quantity	Unit Cost	Total Cost
	STATION ONE			
1.01	Inner Tube Assembly Stand	1	$15K	$15K
1.02	Tube Coating Stand	1	$15K	$15K
	STATION TWO			
2.01	Tube Assembly Stand	1	$15K	$15K
	STATION THREE			
3.01	Module Assembly Stand	3	$15K	$45K
3.02	Lifting Fixture	1	$15K	$15K
3.03	Personnel Platform	2	$2K	$4K
	STATION FOUR			
4.01	Module/Support Assembly Stand	1	$25K	$25K
4.02	Lifting Fixture	1	$25K	$25K
4.03	Personnel Platform	2	$3K	$6K
	STATION FIVE			
5.01	Subassembly Test Stand	1	$25K	$25K
5.02	Temporary Bracing	1	$15K	$15K
5.03	Personnel Platform	2	$3K	$6K
	STATION SIX			
6.01	Assembly Fit-up Stand	1	$50K	$50K
6.02	Personnel Platform	2	$4K	$8K
	SPECIAL PURPOSE EQUIPMENT			
7.01	Milling Machine	1	$30K	$30K
7.02	Tube Swaging Machine	1	$40K	$40K
7.03	Dimensional Inspection Fixture	1	$30K	$30K
7.04	Portable Readout Test Stand	1	$20K	$20K
7.05	Temporary Wiring Harnesses	1	$10K	$10K
7.06	Op Test Sources/Counters	1	$5K	$5K
	GENERAL EQUIPMENT			
8.01	Clothing	1	$10K	$10K
8.02	Cleaning Supplies	1	$5K	$5K
8.03	Work Tables	3	$3K	$9K
8.04	Tools	1	$10K	$10K
8.05	Temporary Use Items	1	$20K	$20K
8.06	Handling Carts (10 to 50 T)	2	$5K	$10K
	Total			$468K

S. M. Chae ORNL/4-10-92

1.5 MANUFACTURING LABOR COST

Liquid Argon Forward Calorimeter

(Manufacturing Manpower)

	STATION ONE					
1.00	Inner Tube & Tungsten Rod Assembly					
Task Number	Task Description	Hours	Personload	Unit Tot PHRS	Quantity	Tot. PHRS
1.01	Get Inner Tubes	1.00	1	1.00	3	3
1.02	Swage One end of Inner Tubes	0.03	1	0.03	82800	2760
1.03	Get Tungsten Rods	1.00	1	1.00	3	3
1.04	Insert Tungsten Rods into Inner Tubes	0.01	1	0.01	82800	690
1.05	Swage other end of Inner Tubes	0.03	1	0.03	82800	2760
1.06	Coat Inner Tubes	0.03	1	0.03	82800	2070
1.07	Inspect Inner Tubes	0.003	1	0.00	82800	230
1.08	Move Inner Tubes to Storage/Station 2	0.50	1	0.50	3	1.5
1.09	Get Outer Tubes	1.00	1	1.00	3	3
1.10	Inspect Outer Tubes	0.001	1	0.00	82800	115
1.11	Coat Outer Tubes	0.03	1	0.03	82800	2070
1.12	Inspect Outer Tubes	0.003	1	0.00	82800	230
1.13	Move Outer Tubes to Storage/Station 2	0.50	1	0.50	3	1.5
	Totals for Station One	4.13		4.13		10937
	Personnel Efficiency					1.25
	Estimated Personhours					13671
	Person Years@1770 Hr/Yr					7.72

	STATION TWO					
2.00	Tube Assembly					
Task Number	Task Description	Hours	personload	Unit Tot PHRS	Quantity	Tot. PHRS
2.01	Retrieve Inner Tubes & Quartz Fiber	1.00	1	1.00	3	3
2.02	Wrap Quartz Fiber Around Inner Tubes	0.02	1	0.02	82800	1380
2.03	Retrieve Outer Tubes	0.50	1	0.50	3	1.5
2.04	Insert Inner Tubes into Outer Tubes	0.03	1	0.03	82800	2070
2.05	Secure Tube Asembly	0.004	1	0.00	82800	345
2.06	Inspect Tube Assembly	0.003	1	0.00	82800	230
2.07	Move subassembly to Storage/Station 3	0.50	1	0.50	3	1.5
	Totals for Station Two	2.05		2.05		4031
	Personnel Efficiency					1.25
	Estimated Personhours					5039
	Person Years@1770 Hr/Yr					2.85

STATION THREE

3.00 Module Assembly

Task Number	Task Description	Hours	Personload	Unit Tot PHRS	Quantity	Tot. PHRS
3.01	Retrieve Tungsten Plates from Storage	1.00	2	2.00	6	12
3.02	Retrieve Module Barrel & Top Plate	0.50	2	1.00	6	6
3.03	Clean & Inspect Barrel & Top Plate	0.50	1	0.50	6	3
3.04	Install Ceramic Spacers in Bottom Plate Holes	0.001	1	0.00	82800	115
3.05	Install Tungsten Plates in Barrel	0.50	3	1.50	220	331
3.06	Align Holes & Install Top Plate	1.00	3	3.00	6	18
3.07	Install Tube Assemblies in Module Assembly	0.02	1	0.02	82800	1380
3.08	Secure Tube Assemblies to Module Assembly	0.02	1	0.02	82800	1380
3.09	Install G-10 Plates & Electrically Connect to Tubes	0.02	1	0.02	82800	1380
3.10	Perform Module Assembly Functional Check	0.004	2	0.01	82800	690
3.11	Move Barrel Assembly to Stoarge/Station 4	1.00	2	2.00	6	12
	Totals for Station Three	4.56		10.06		5326.708661
	Personnel Efficiency					1.25
	Estimated Personhours					6658
	Person Years@1770 Hr/Yr					3.76

STATION FOUR

4.00 Assemble Module/Support Structure

Task Number	Task Description	Hours	Personload	Unit Tot PHRS	Quantity	Tot. PHRS
4.01	Adjust Module/Support Assembly Stand	0.50	1	0.50	2	1
4.02	Inspect Module/Support Assembly Stand	0.50	1	0.50	2	1
4.03	Get Module Assemblies	1.00	2	2.00	6	12
4.04	Get Support Structure	1.00	2	2.00	2	4
4.05	Install/Fit Modules	4.00	3	12.00	6	72
4.06	Connect Stripline Cables & Lable	1.00	1	1.00	72	72
4.07	Inspect Subassembly	1.00	1	1.00	6	6
4.08	Label and Store Subassembly	2.00	3	6.00	2	12
	Total for Station Four	11.00		25.00		180
	Personnel Efficiency					1.25
	Estimated Personhours					225
	Person Years@1770 Hr/Yr					0.13

LAr FCAL Subassembly Manufacturing Person-hours Subtotal	25593
Person Years@1770 Hr/Yr	14.46

STATION FIVE

5.00 Test Subassemblies @ Texas

Task Number	Task Description	Hours	Personload	Unit Tot PHRS	Quantity	Tot. PHRS
5.01	Move Subassembly to Test Station	2.00	3	6.00	2	12
5.02	Install Test Harnesses	2.00	2	4.00	72	288
5.03	Start-up Test Apparatus	2.00	2	4.00	2	8
5.04	Perform Functional Tests	40.00	2	80.00	2	160
5.05	Move Assembly to Storage/Sta 6	1.00	2	2.00	2	4
	Total for Station Five	47.00		96.00		472
	Personnel Efficiency					1.25
	Estimated Personhours					590
	Person Years@1770 Hr/Yr					0.33

STATION SIX

6.00 Assembly Fit-up @ Texas

Task Number	Task Description	Hours	Personload	Unit Tot PHRS	Quantity	Tot. PHRS
6.01	Move Subassemblies to Fit-up Stand	2.00	2	4.00	2	8
6.02	Connect Electronics	2.00	2	4.00	72	288
6.03	Fill with Liquid Argon (part of Central Installation)	0.00	0	0.00	2	0
6.04	Operational Test	80.00	2	160.00	2	320
	Total for Station Six	84.00		168.00		616
	Personnel Efficiency					1.25
	Estimated Personhours					770
	Person Years@1770 Hr/Yr					0.44

Module Assembly Subtotal (@ Texas)	1360
Person Years@1770 Hr/Yr	0.77

Total Fabrication Personhours	**26953**
Person Years@1770 Hr/Yr	**15.23**

1.6 INSTALLATION COST

(Equipment & Labor)

Liquid Argon Forward Calorimeter Installation

Total:	$129,757

Installation Equipmer

Equipment	Quantity	Weight	Units	Unit Cost		Cost
Transport Cart	1	1	Unit	$40,000.00		$40,000
Temporary Rail	1	10000	Lbs	$2.00		$20,000
Temporary Bracing	1	12500	Lbs	$2.00		$25,000
Crane	1	1	Unit	$25,000.00		$25,000
Total						$110,000

Installation Manpower

Personnel	No.	Duration Months	Service Time MH/Month	Total Hours	Hourly Rate	Cost
Electrician	3	1	170	510	$29.86	$15,229
Crane Operator	1	1	170	170	$26.64	$4,529
Total	4			680	$56.50	$19,757
Person Years				0.33		
Yearly Rate				$59.27K		

2.1 PARAMETER TABLE

GEM Parameters
Liquid Argon Forward Calorimeter

NAME	EM	Hadronic	Tail Catcher	units
Distance from IP to near face	5090	5385	6005	mm
Depth in Z	250	570	300	mm
Distance from IP to Module Mid-Plane	5215	5670	6155	mm
Inner Radius	20	21.69	23.47	mm
Outer Radius	330	566	614	mm
Unit Cell				
Center to Center	7.5	8.1545	8.8525	mm
Tube Diameter ID	5	5.4364	5.9017	mm
Tube Wall Thickness	0.2	0.2	0.2	mm
Liquid Argon Gap	0.1	0.3	0.3	mm
Drift Time	20	60	60	nsec
Sampling Fraction (by Volume)	3.16	8.41	7.78	%
Tube Capacitance	521	415	238	pF
Tube Inductance	2.04	13.33	6.43	nH
Tube Impedance	1.98	5.67	5.20	Ohms
Weight	1.46	12.49	7.65	Metric Tons
Number of Tubes	6871	17261	17263	tubes

Rutherfoord / Chae, 4/16/92

GEM Parameters
Liquid Argon Forward Calorimeter

	One Side	Both Sides	
Modules	3	6	units
Channels	868	1,736	units
Module Barrel (Metal) Volume	0.08	0.17	M^3
SS Tube Volume	0.1	0.2	M^3
Tungsten Rod & Absorber (95% W) Volume	0.8	1.6	M^3
Absorber Volume (50% Tungsten)	0.3	0.7	M^3
Tungsten powder Volume	0.2	0.3	M^3
Eutectic Volume	0.2	0.3	M^3
Volume of Module Support Structure	0.2	0.3	M^3
Volume of Cryostat	0.8	1.5	M^3
TOTAL VOLUME	2.3	4.6	M^3
Weight of 3 Barrels (Matel)	0.7	1.3	Metric Tons
Weight of SS Tubes	0.9	1.8	Metric Tons
Weight of W Rods & Absorber (95% W)	15.0	30.0	Metric Tons
Weight of 50% Tungsten Eutectic	5.0	10.1	Metric Tons
Tungsten Powder	3.4	6.7	Metric Tons
Eutectic	1.7	3.3	Metric Tons
Weight of Module Support Structure	1.4	2.7	Metric Tons
Weight of Cryostat	6.1	12.3	Metric Tons
TOTAL WEIGHT	29.1	58.2	Metric Tons
Active Absorption Lenghth	10.00		Lambda
Eta Coverage	$3 < \eta < 5$		
No of Tube Positions In EM Module	6,872	13,744	Units
No of Tube Positions In HADRON MODULE #1	17,260	34,520	Units
No of Tube Positions In HADRON MODULE #2	17,259	34,518	Units
Length of Tubes for EM Module	1,718	3,435	Meters
Length of Tubes for Hadronic Module	9,833	19,667	Meters
Length of Tubes for Tail Catcher	5,179	10,359	Meters
Inner Radius	20		mm
Outer Radius	890		mm
Active Length***	1,120		mm

*** This value include the active length of absorbers only - gap between modules or the cryostat dimension is not included.

2.2 GENERAL ARRANGEMENT & DETAIL DRAWINGS

GEM Liquid Argon Calorimeter

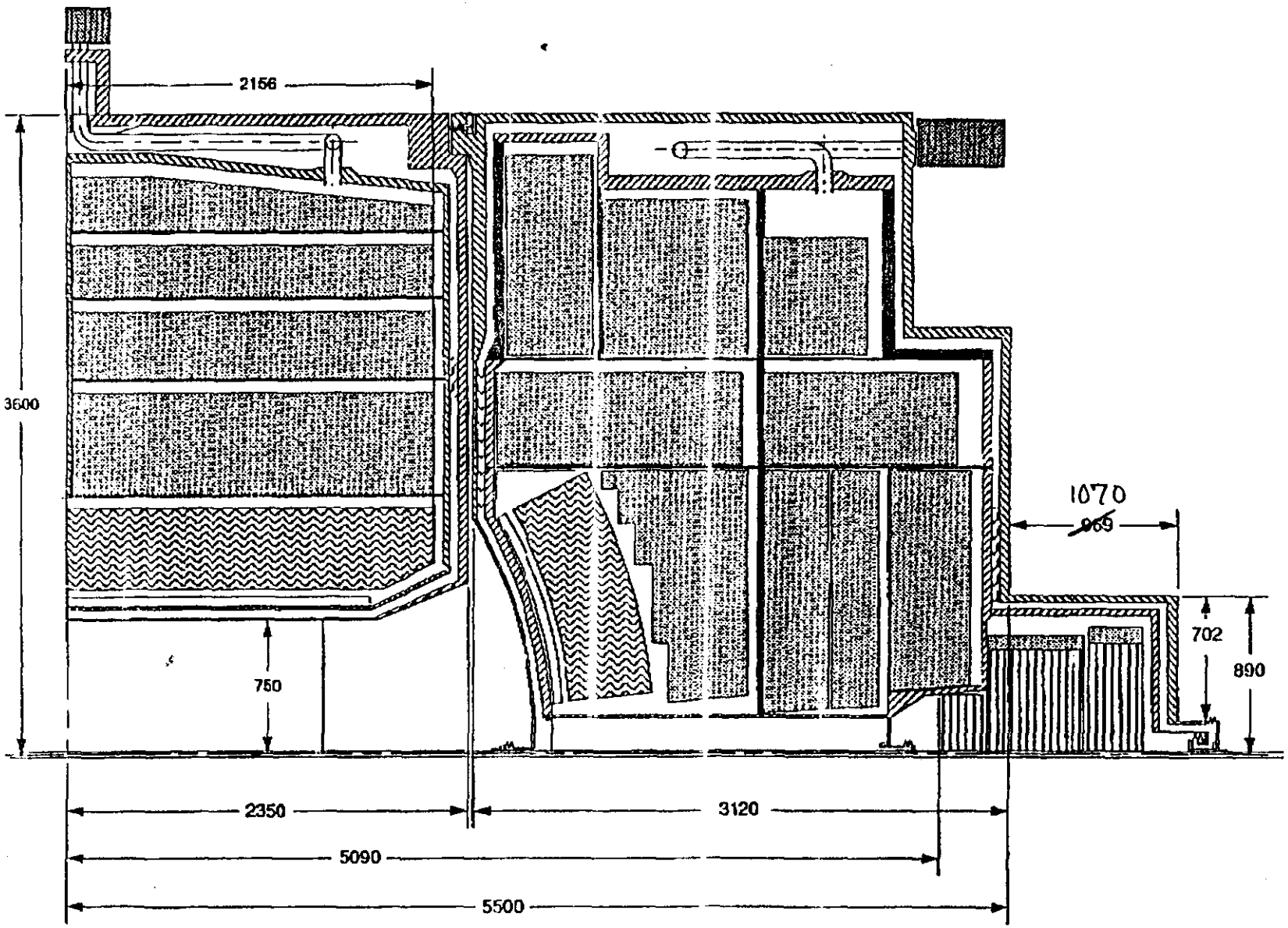

KLKillian Inner Calorimeter Walls 4/13/92

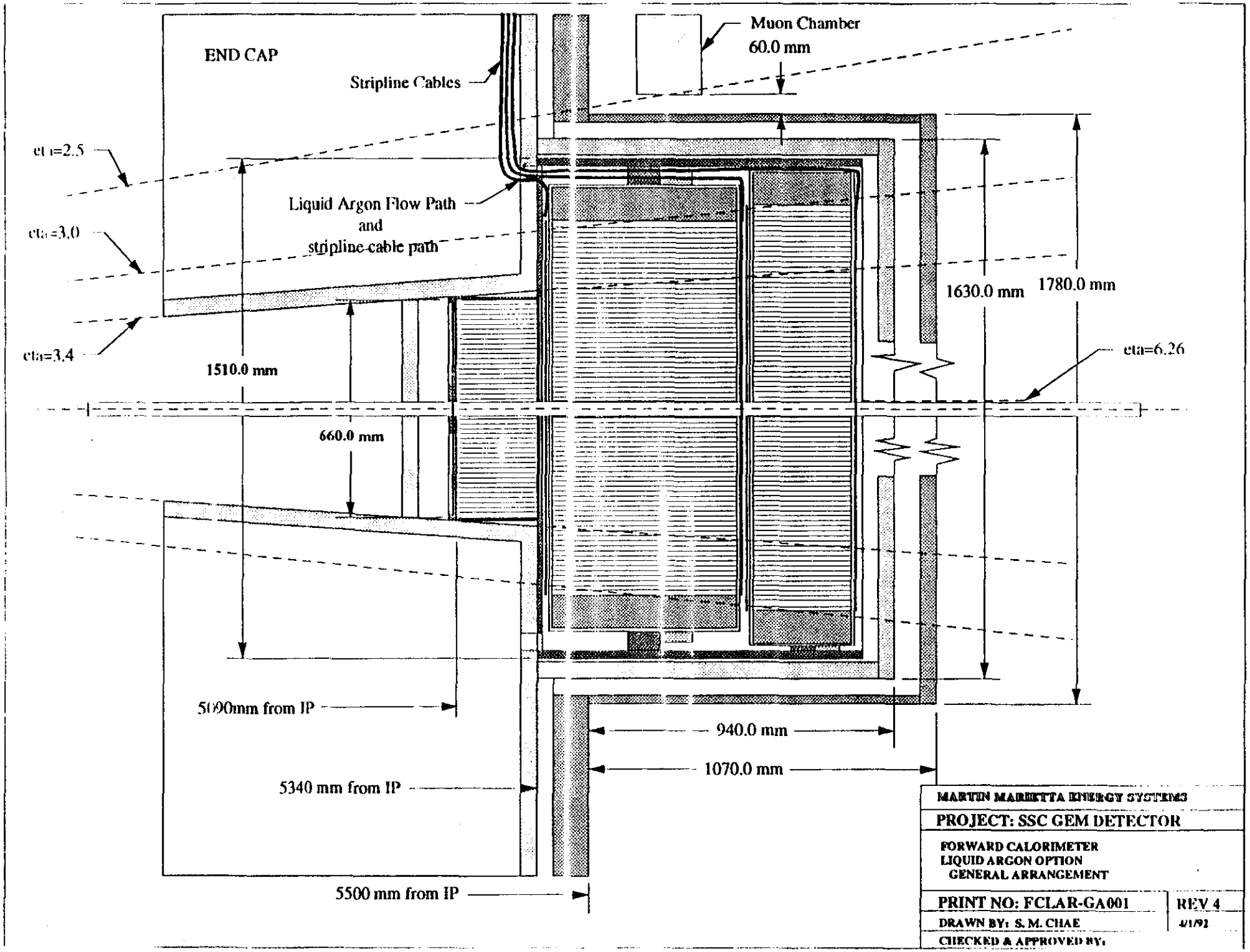
END CAP
Stripline Cables
Muon Chamber
60.0 mm
eta=2.5
eta=3.0
eta=3.4
Liquid Argon Flow Path
and
stripline cable path
1510.0 mm
660.0 mm
1630.0 mm
1780.0 mm
eta=6.26
5090mm from IP
5340 mm from IP
5500 mm from IP
940.0 mm
1070.0 mm
MARTIN MARIETTA ENERGY SYSTEMS
PROJECT: SSC GEM DETECTOR
FORWARD CALORIMETER
LIQUID ARGON OPTION
GENERAL ARRANGEMENT
PRINT NO: FCLAR-GA001
REV 4
DRAWN BY: S. M. CHAE
4/1/92
CHECKED & APPROVED BY:

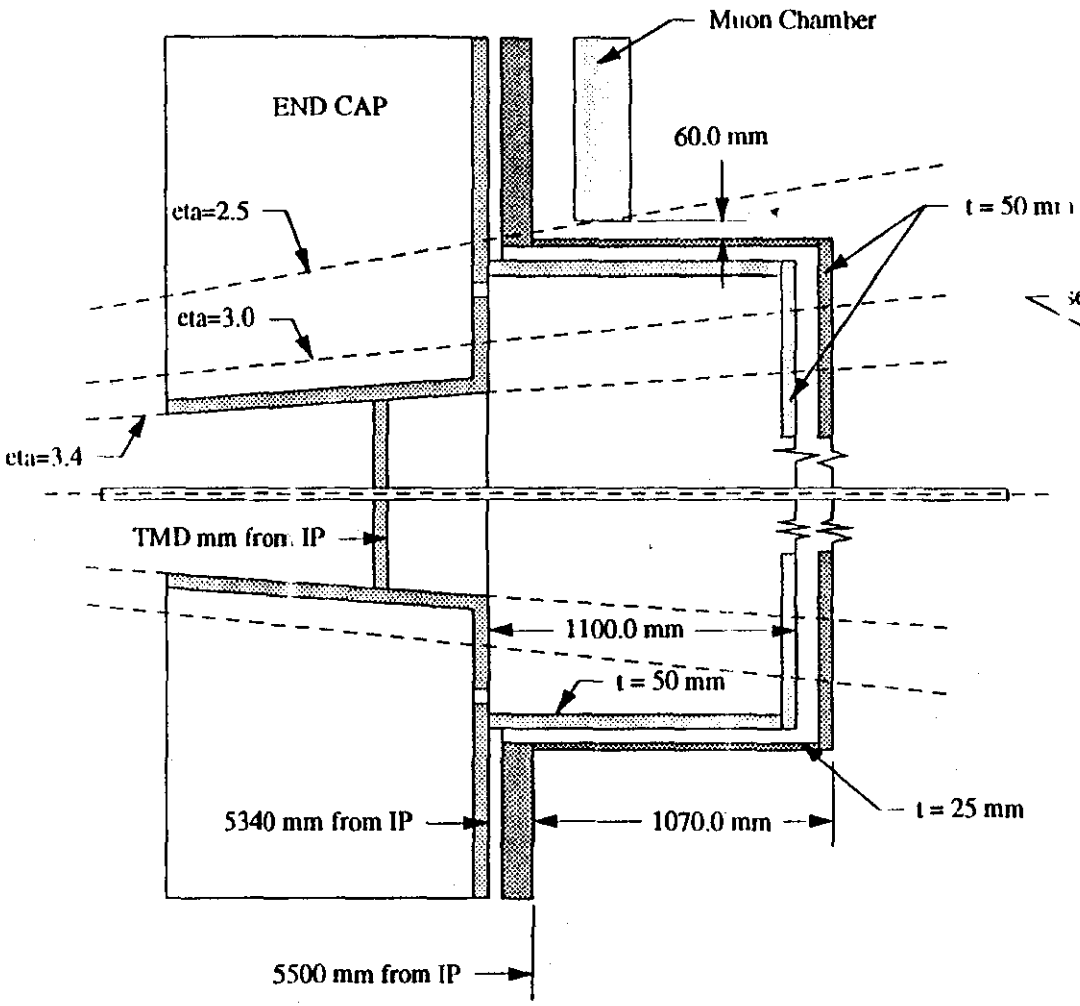

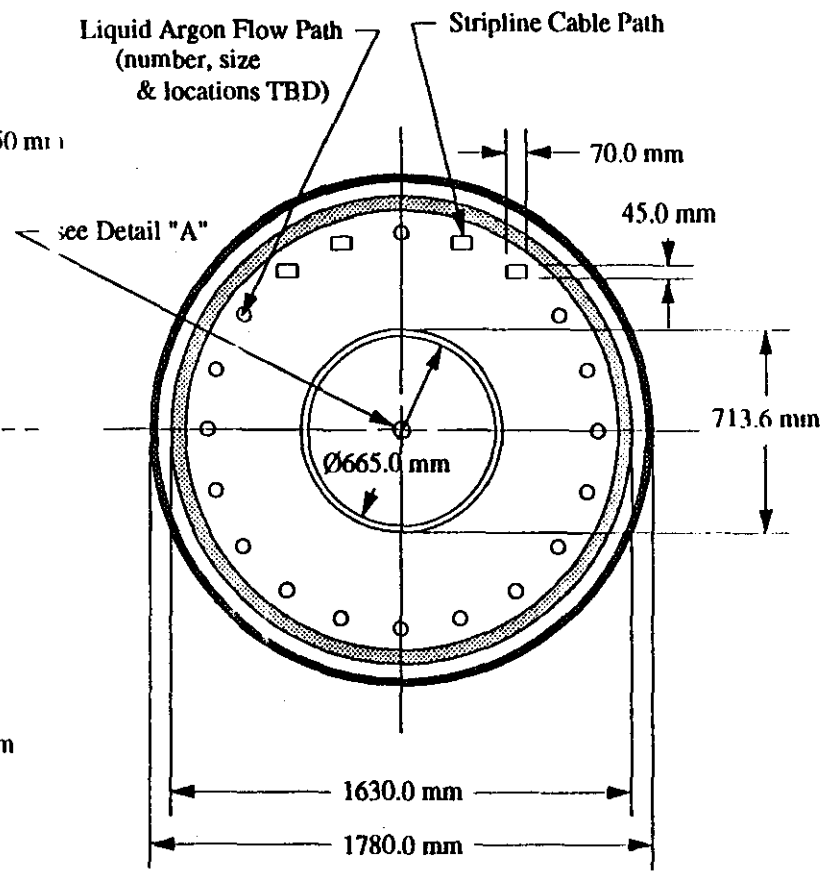

VIEW WITH END PLATES OPEN

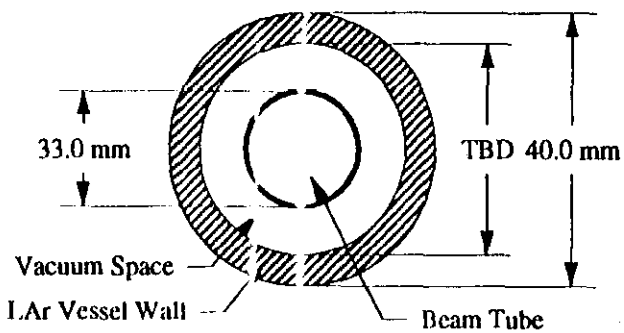

DETAIL "A" - VESSEL DETAIL AROUND BEAM TUBE

MARTIN MARIETTA ENERGY SYSTEMS	
PROJECT: SSC GEM DETECTOR	
FORWARD CALORIMETER LIQUID ARGON OPTION CRYOGENIC VESSEL DESIGN	
PRINT NO: FCLAR-GA002	REV 2
DRAWN BY: S. M. CHAE	3/27/92
CHECKED & APPROVED BY:	

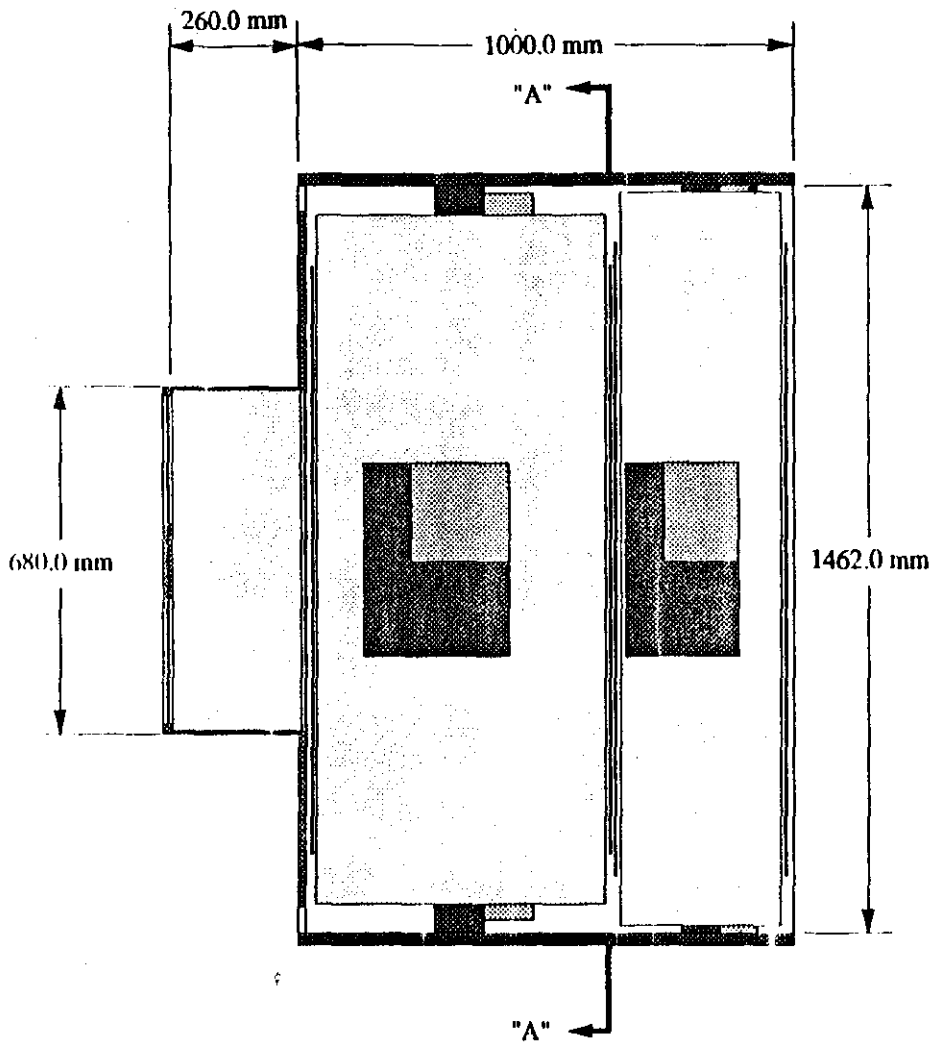

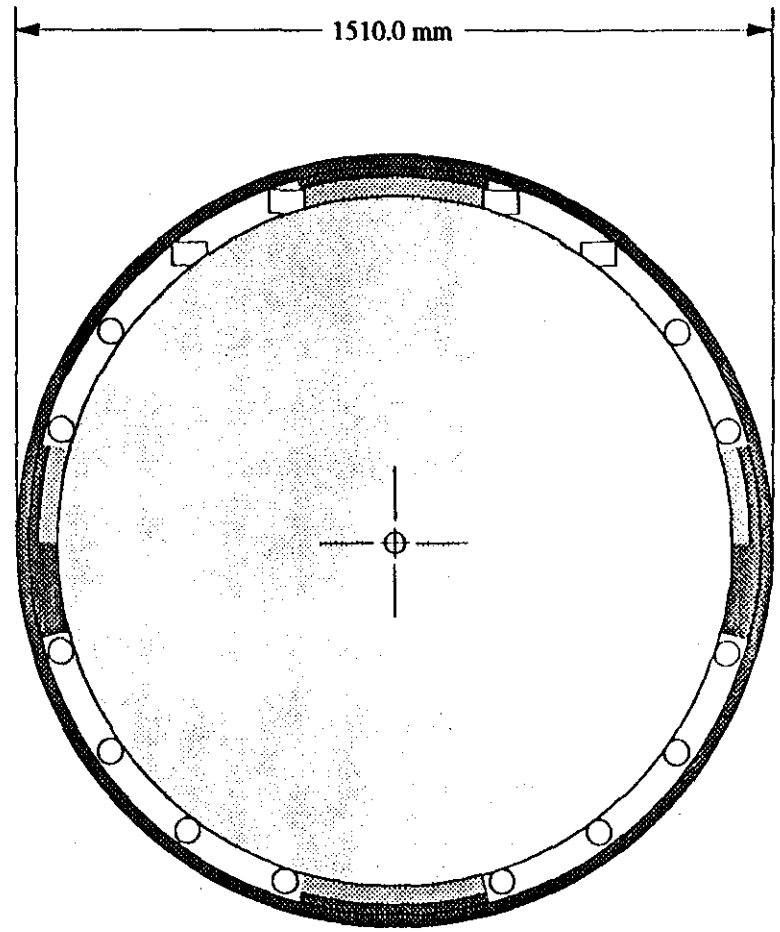

VIEW "A - A"

MARTIN MARIETTA ENERGY SYSTEMS	
PROJECT: SSC GEM DETECTOR	
FORWARD CALORIMETER LIQUID ARGON OPTION MODULE BARREL / SUPPORT ARRANGEMENT	
PRINT NO: FCLAR-GA003	REV 0
DRAWN BY: S. M. CHAE	3/31/92
CHECKED & APPROVED BY:	

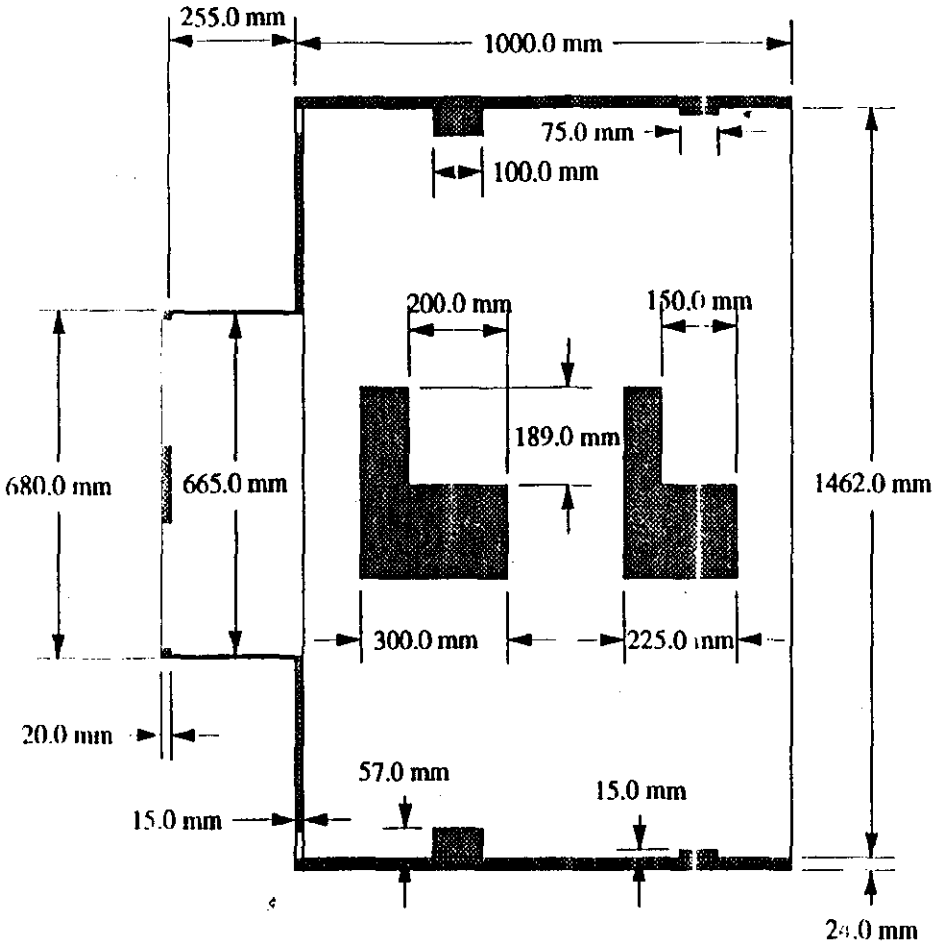

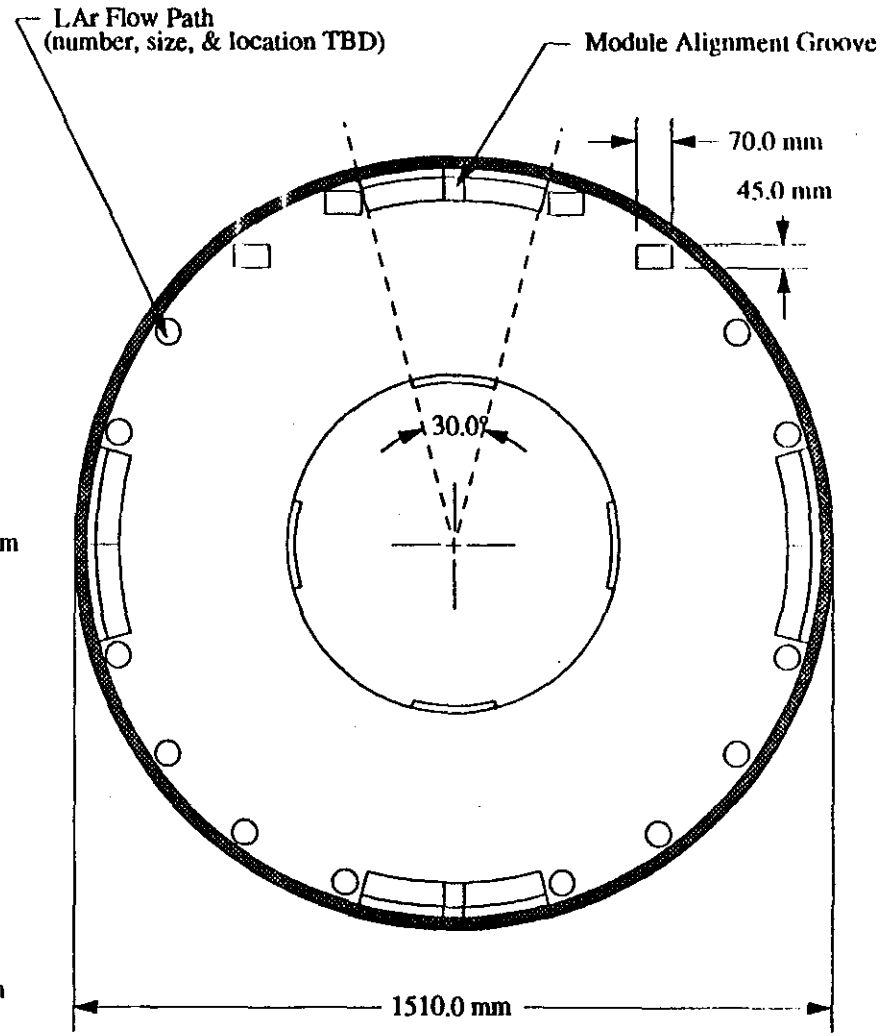

MARTIN MARIETTA ENERGY SYSTEMS	
PROJECT: SSC GEM DETECTOR	
FORWARD CALORIMETER LIQUID ARGON OPTION MODULE SUPPORT STRUCTURE DESIGN	
PRINT NO: FCLAR-GA004	REV 0
DRAWN BY: S. M. CHAE	3/31/92
CHECKED & APPROVED BY:	

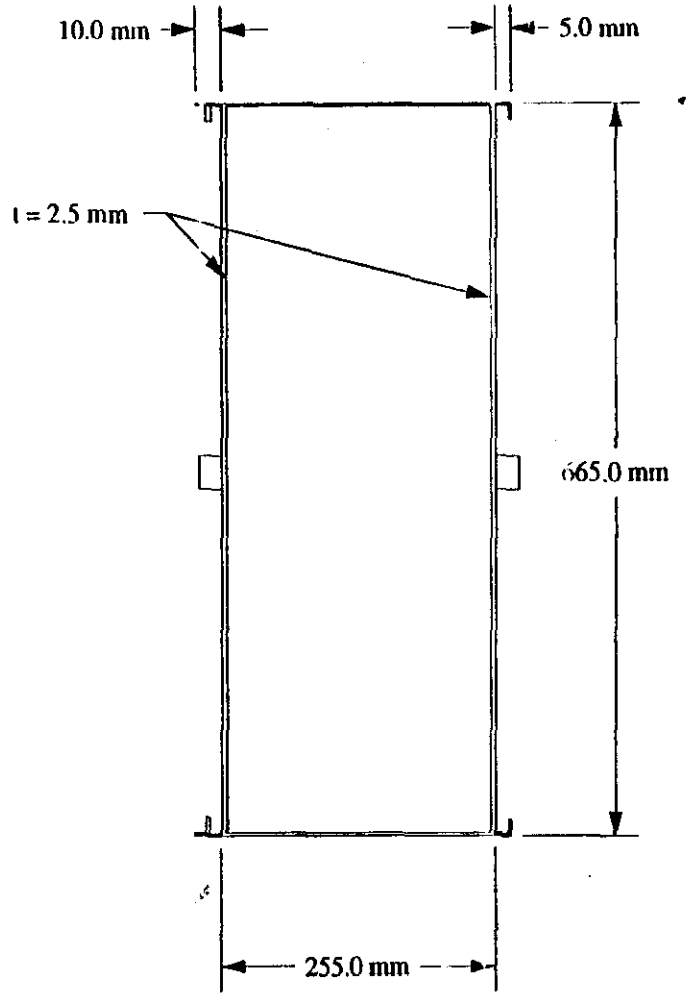

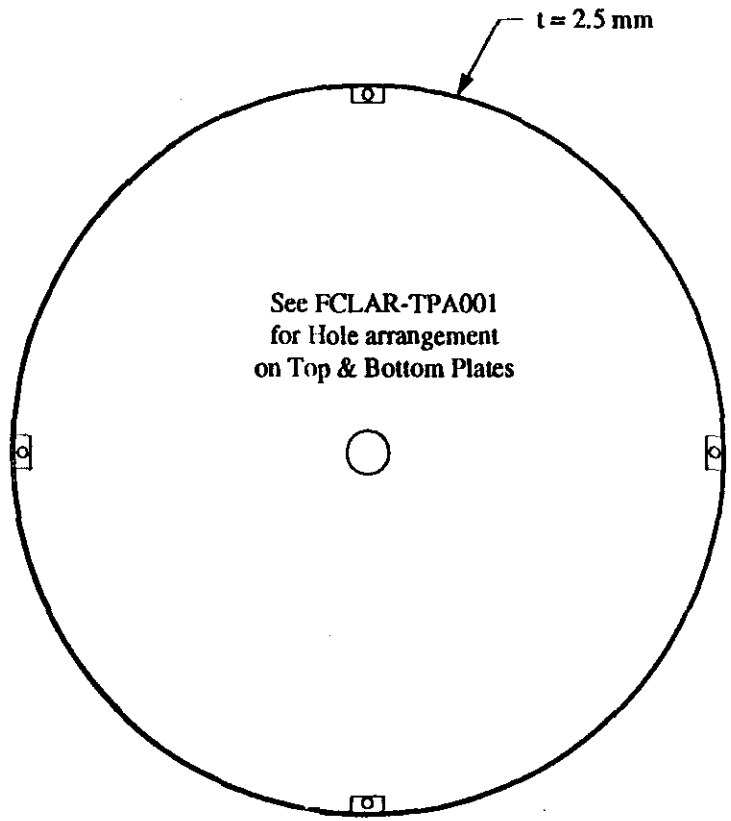

Notes:
1. G-10 plate support frames are not drawn to scale.

MARTIN MARIETTA ENERGY SYSTEMS	
PROJECT: SSC GEM DETECTOR	
FORWARD CALORIMETER LIQUID ARGON OPTION MODULE BARREL DESIGN - EM	
PRINT NO: FCLAR-BD001	REV 0
DRAWN BY: S. M. CHAE	3/31/92
CHECKED & APPROVED BY:	

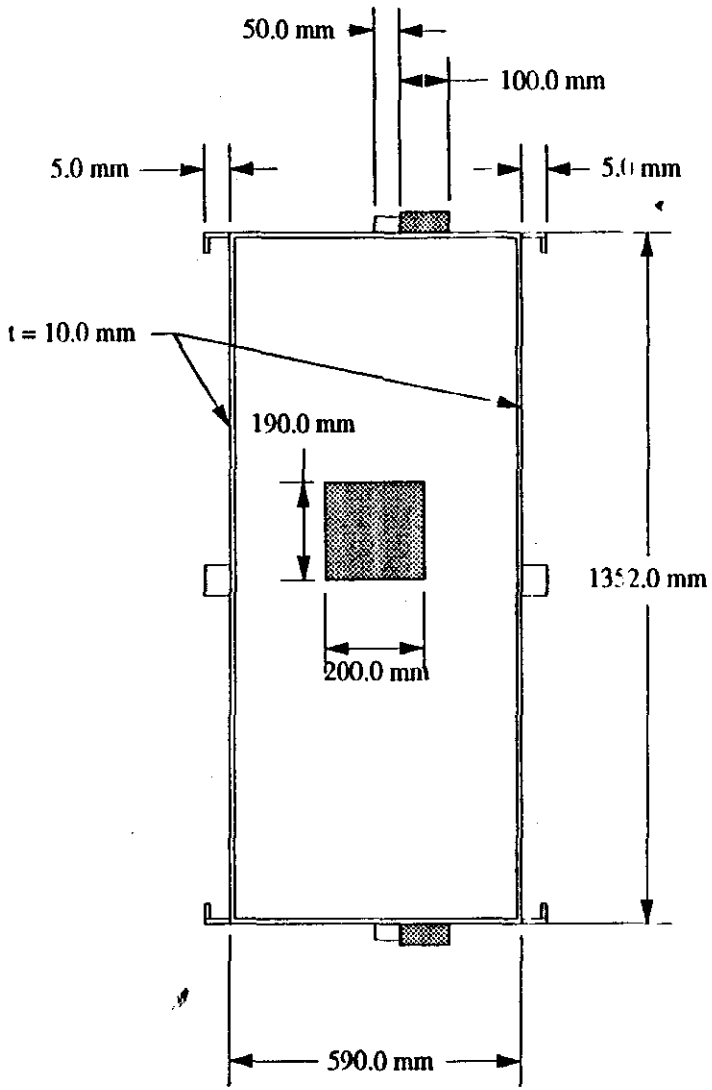

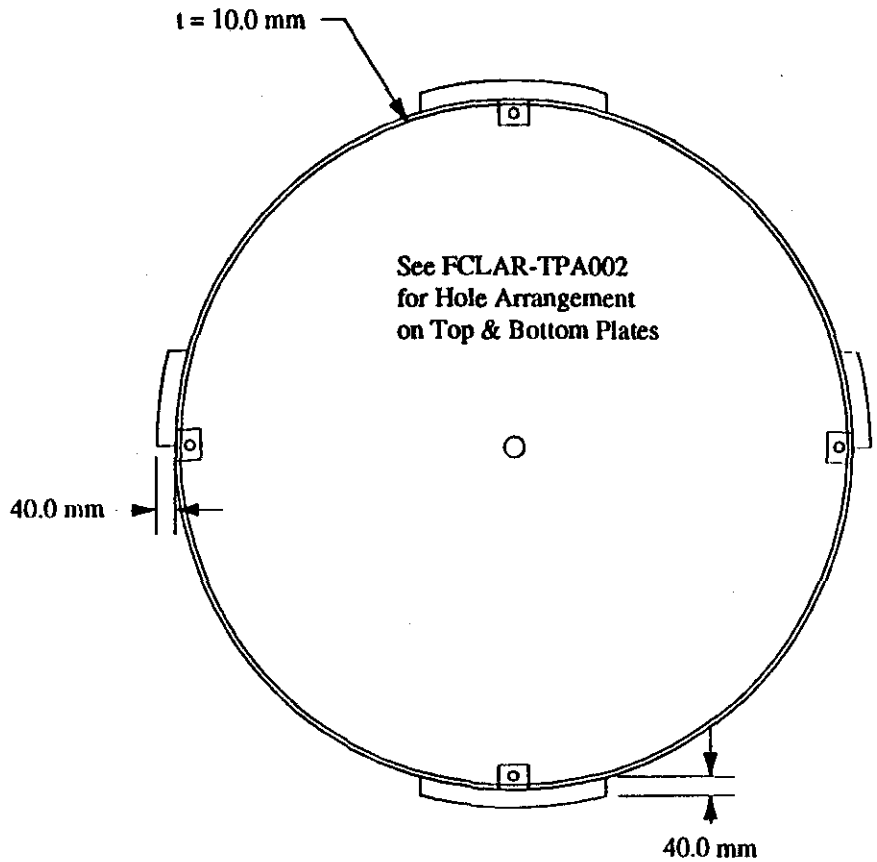

Note:
1. G-10 plate supports are not drawn to scale.

MARTIN MARIETTA ENERGY SYSTEMS	
PROJECT: SSC GEM DETECTOR	
FORWARD CALORIMETER LIQUID ARGON OPTION MODULE BARREL DESIGN - HADRON	
PRINT NO: FCLAR-BD002	REV 0
DRAWN BY: S. M. CHAE	4/1/92
CHECKED & APPROVED BY:	

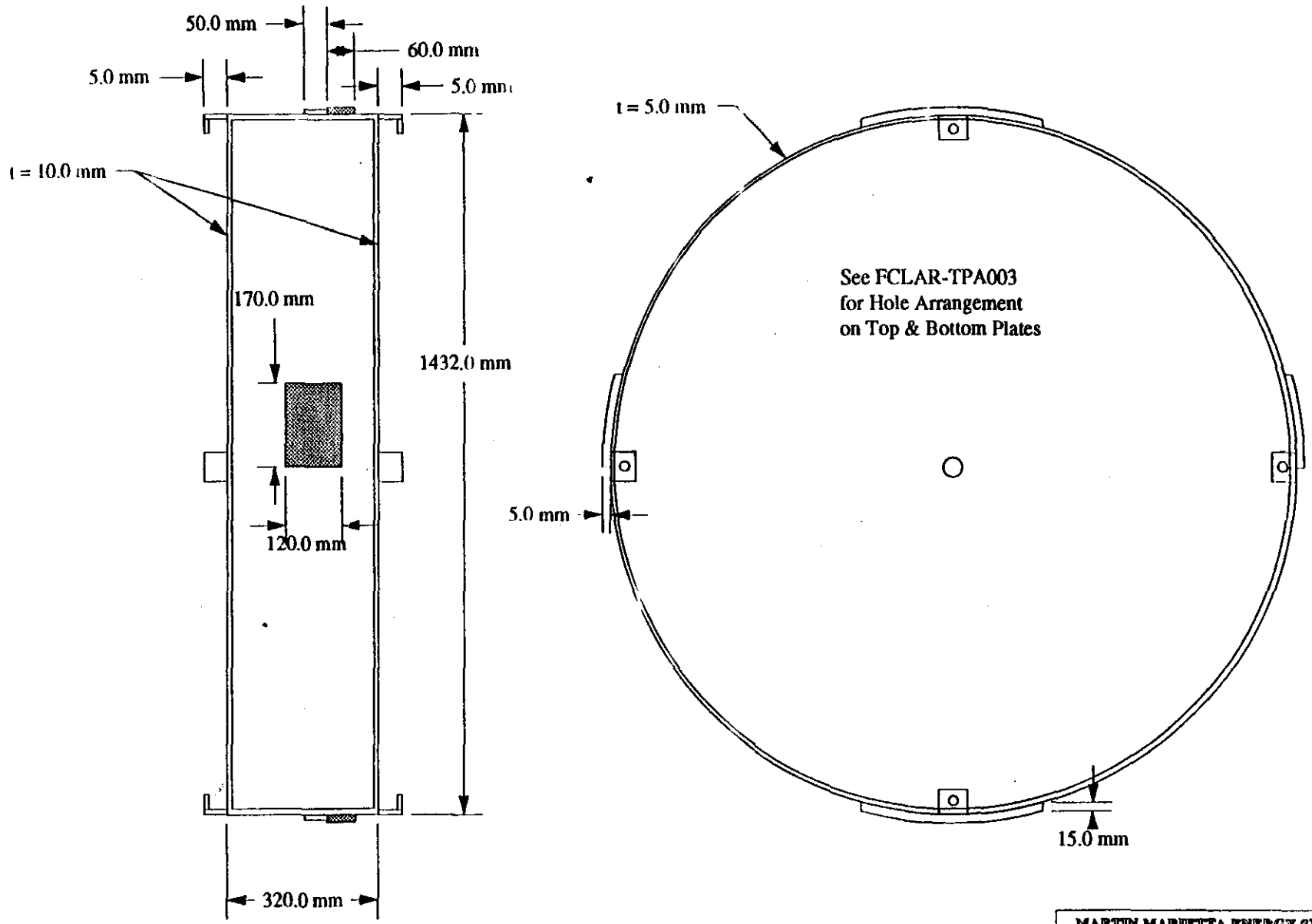

Note:
1. G-10 plate supports are not drawn to scale.

MARTIN MARIETTA ENERGY SYSTEMS	
PROJECT: SSC GEM DETECTOR	
FORWARD CALORIMETER LIQUID ARGON OPTION MODULE BARREL DESIGN - TAIL CATCHER	
PRINT NO: FCLAR-BD003	REV 0
DRAWN BY: S. M. CHAE	3/31/92
CHECKED & APPROVED BY:	

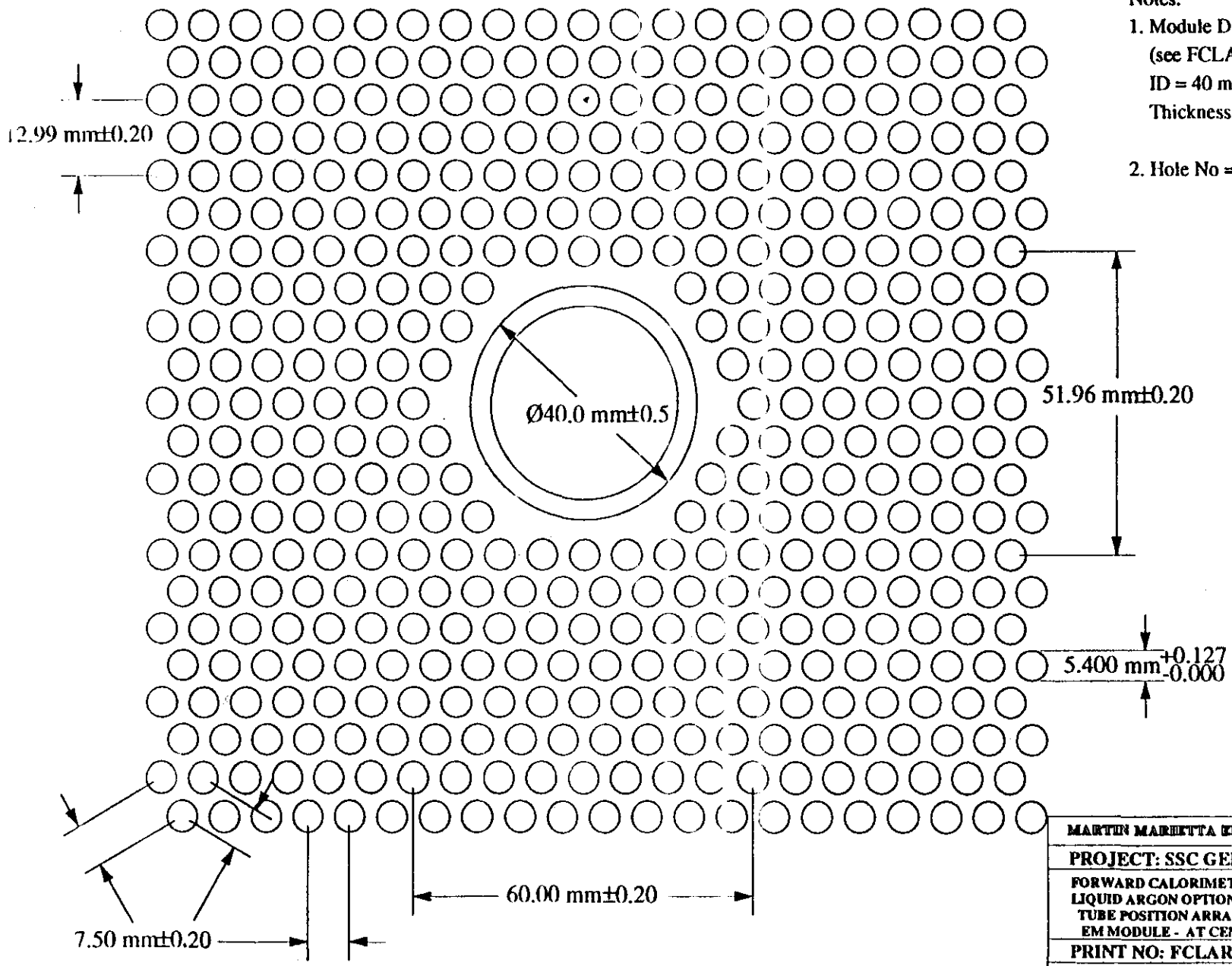

Notes:

1. Module Dimension
   (see FCLAR-MD001)
   ID = 40 mm, OD = 660 mm
   Thickness = 250 mm

2. Hole No = ~ 6870 holes

MARTIN MARIETTA ENERGY SYSTEMS	
PROJECT: SSC GEM DETECTOR	
FORWARD CALORIMETER LIQUID ARGON OPTION TUBE POSITION ARRANGEMENT EM MODULE - AT CENTER	
PRINT NO: FCLAR-TPA001	REV 2
DRAWN BY: S. M. CHAE	4/16/92
CHECKED & APPROVED BY:	

Notes:

1. Module Dimension
   (see FCLAR-MD001)
   ID = 43.38 mm, OD = 1132 mm
   THICKNESS = 570 mm

2. Hole No = ~17260 holes

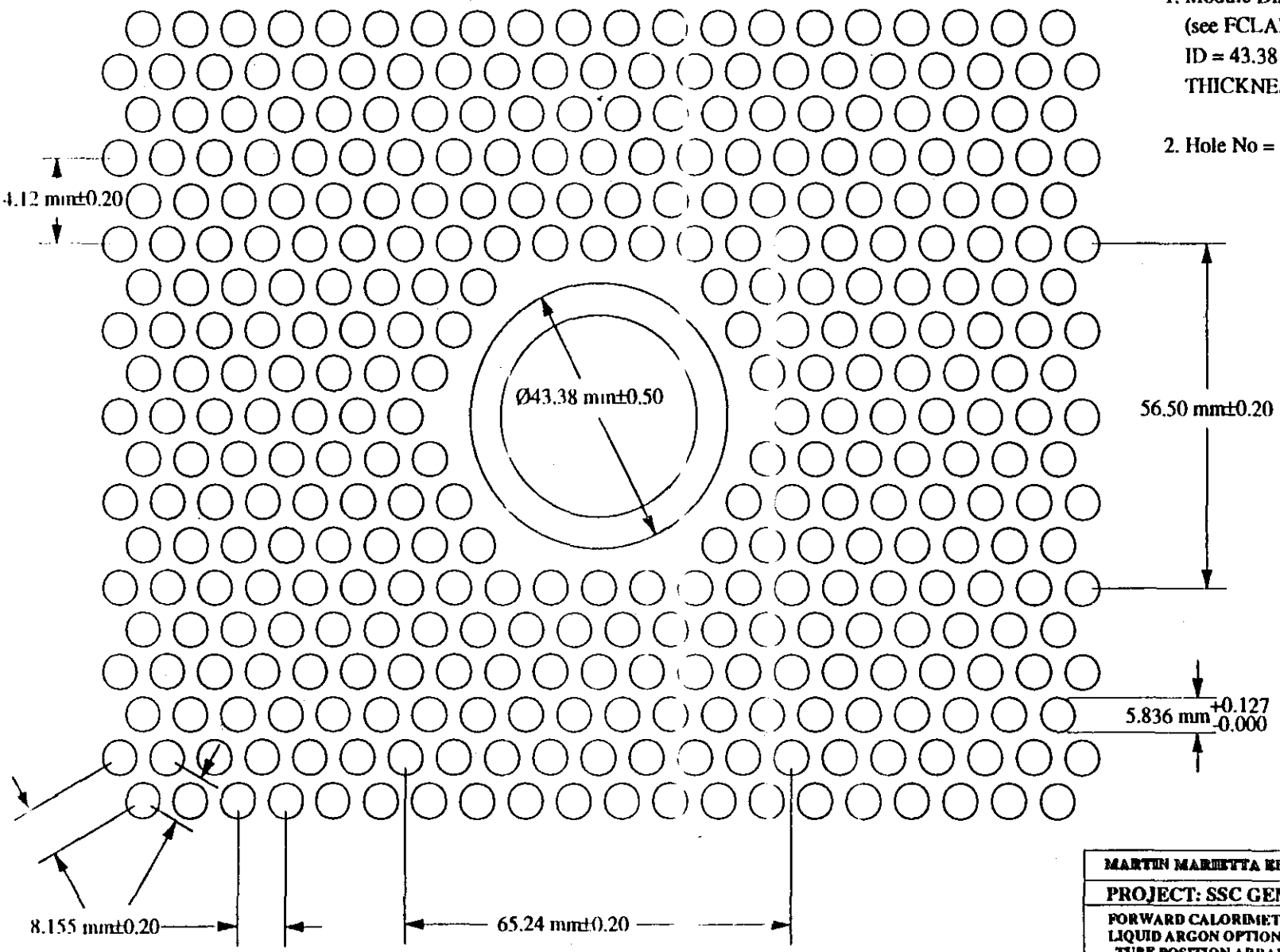

MARTIN MARIETTA ENERGY SYSTEMS	
PROJECT: SSC GEM DETECTOR	
FORWARD CALORIMETER LIQUID ARGON OPTION TUBE POSITION ARRANGEMENT HADRON IC MODULE - AT CENTER	
PRINT NO: FCLAR-TPA002	REV 2
DRAWN BY: S. M. CHAE	4/16/92
CHECKED & APPROVED BY:	

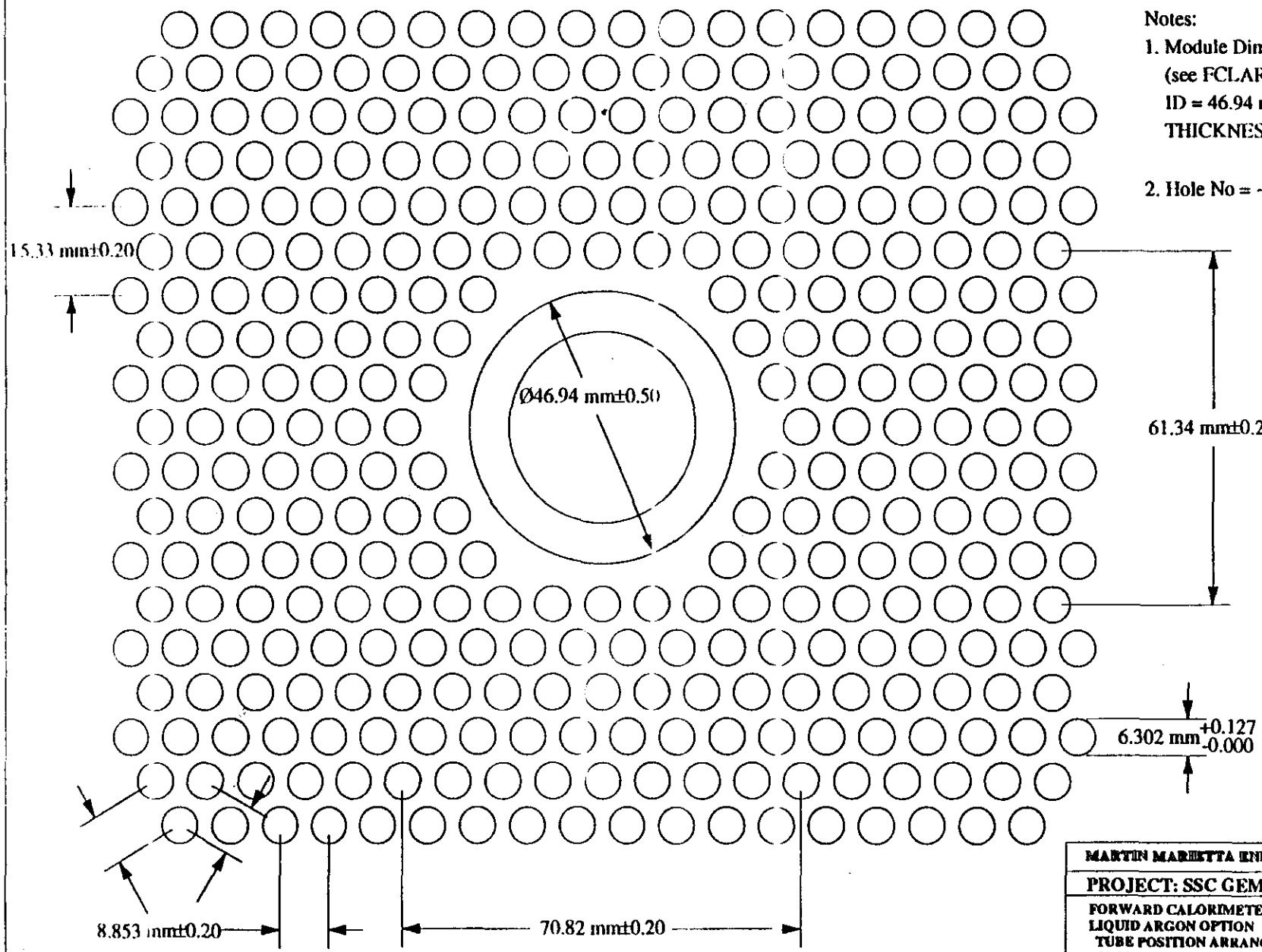

Notes:

1. Module Dimension
   (see FCLAR-MD001)
   ID = 46.94 mm, OD = 1228 mm
   THICKNESS = 300 mm

2. Hole No = ~ 17260 holes

MARTIN MARIETTA ENERGY SYSTEMS	
PROJECT: SSC GEM DETECTOR	
FORWARD CALORIMETER LIQUID ARGON OPTION TUBE POSITION ARRANGEMENT TAIL CATCHER - AT CENTER	
PRINT NO: FCLAR-TPA003	REV 2
DRAWN BY: S. M. CHAE	4/16/92
CHECKED & APPROVED BY:	

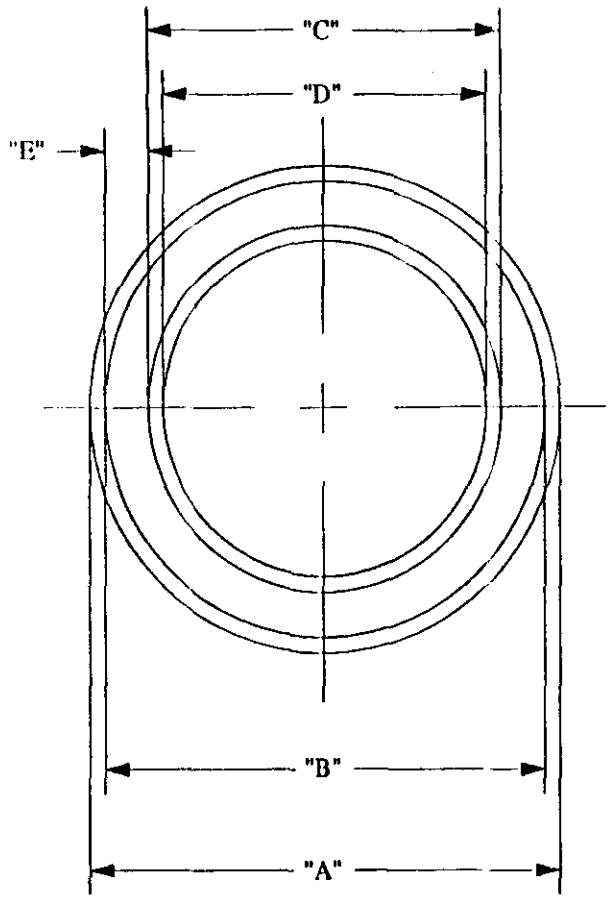

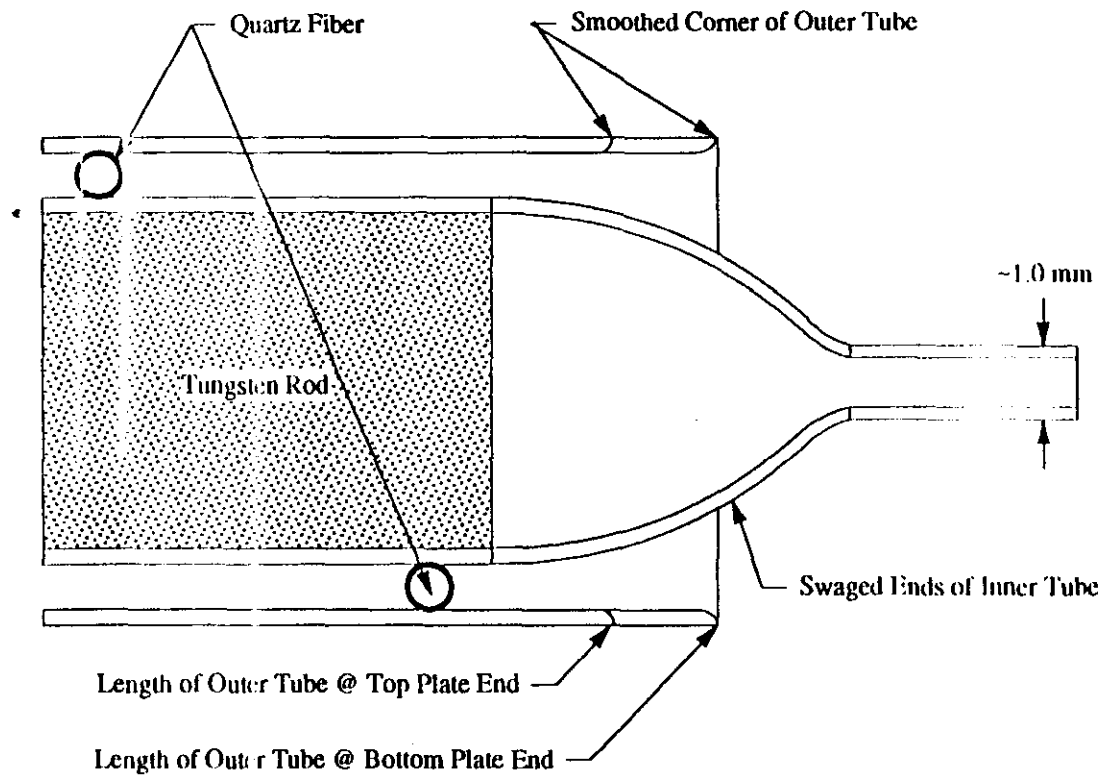

DETAIL OF TUBES AT (BOTH) ENDS

MODULES	A	B	C	D	E
	mm	mm	mm	mm	mm
EM	5.40	5.0	4.80	4.40	0.10
Hadronic	5.836	5.436	4.836	4.436	0.30
Tail Catcher	6.302	5.902	5.302	4.902	0.30

MARTIN MARIETTA ENERGY SYSTEMS

PROJECT: SSC GEM DETECTOR

FORWARD CALORIMETER
LIQUID ARGON OPTION
CYLINDER TUBE ASSEMBLY DESIGN

PRINT NO: FCLAR-MD003 | REV 1

DRAWN BY: S. M. CHAE | 4/1/92

CHECKED & APPROVED BY:

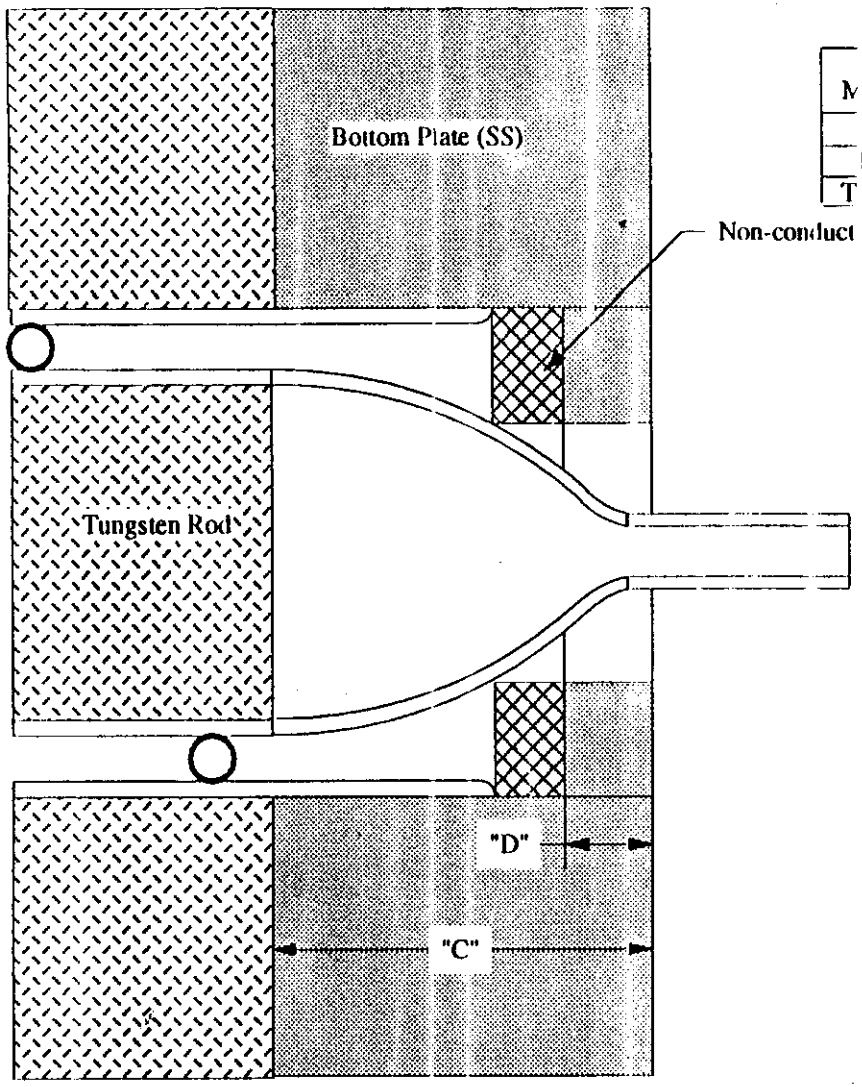

MODULES	A	B	C	D
	mm	mm	mm	mm
EM	5.40	TBD	TBD	TBD
Hadronic	5.836	TBD	TBD	TBD
Tail Catcher	6.302	TBD	TBD	TBD

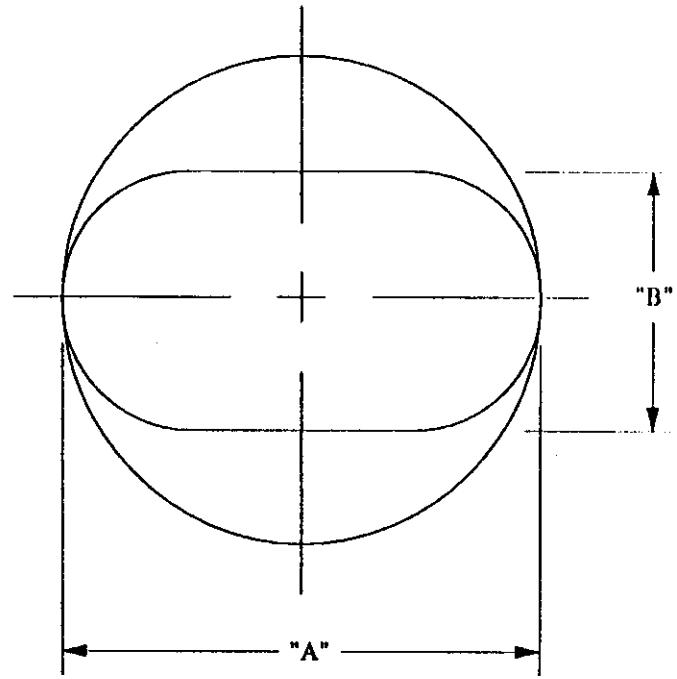

VIEW OF A HOLE IN BOTTOM PLATE

VIEW OF TUBES & BOTTOM PLATE FROM TOP OF CALORIMETER

Note:
1. Drawing shown is not per scale.

MARTIN MARIETTA ENERGY SYSTEMS	
PROJECT: SSC GEM DETECTOR	
FORWARD CALORIMETER LIQUID ARGON OPTION BOTTOM PLATE DESIGN	
PRINT NO: FCLAR-SPD001	REV 0
DRAWN BY: S. M. CHAE	4/10/92
CHECKED & APPROVED BY:	

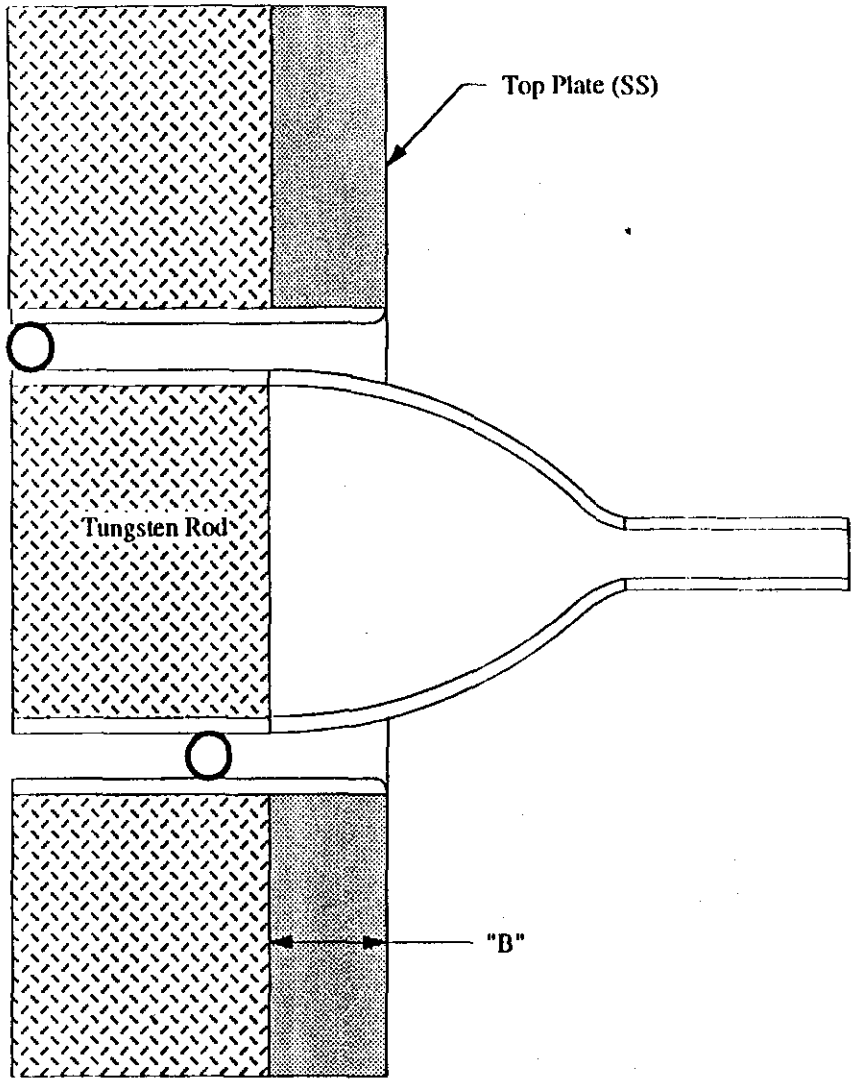

MODULES	A	B
	mm	mm
EM	5.40	TBD
Hadronic	5.836	TBD
Tail Catcher	6.302	TBD

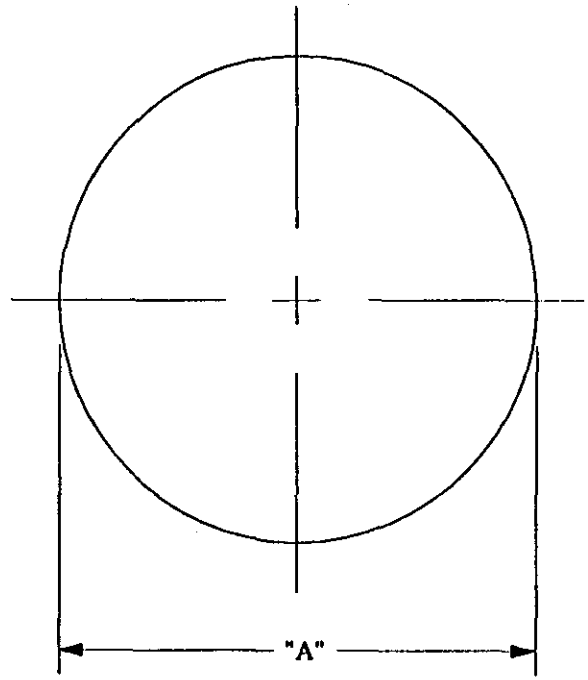

VIEW OF A HOLE IN TOP PLATE

VIEW OF TUBES & TOP PLATE FROM TOP OF CALORIMETER

Note:
1. Drawing shown is not per scale.

MARTIN MARIETTA ENERGY SYSTEMS

PROJECT: SSC GEM DETECTOR

FORWARD CALORIMETER
LIQUID ARGON OPTION
TOP PLATE DESIGN

PRINT NO: FCLAR-SPD002 | REV 0

DRAWN BY: S. M. CHAE | 4/10/92

CHECKED & APPROVED BY:

Notes:

1. Module Dimension
   (see FCLAR-MD001)
   ID = 40 mm, OD = 660 mm
   Thickness = 250 mm

2. Hole No = ~ 6870 holes

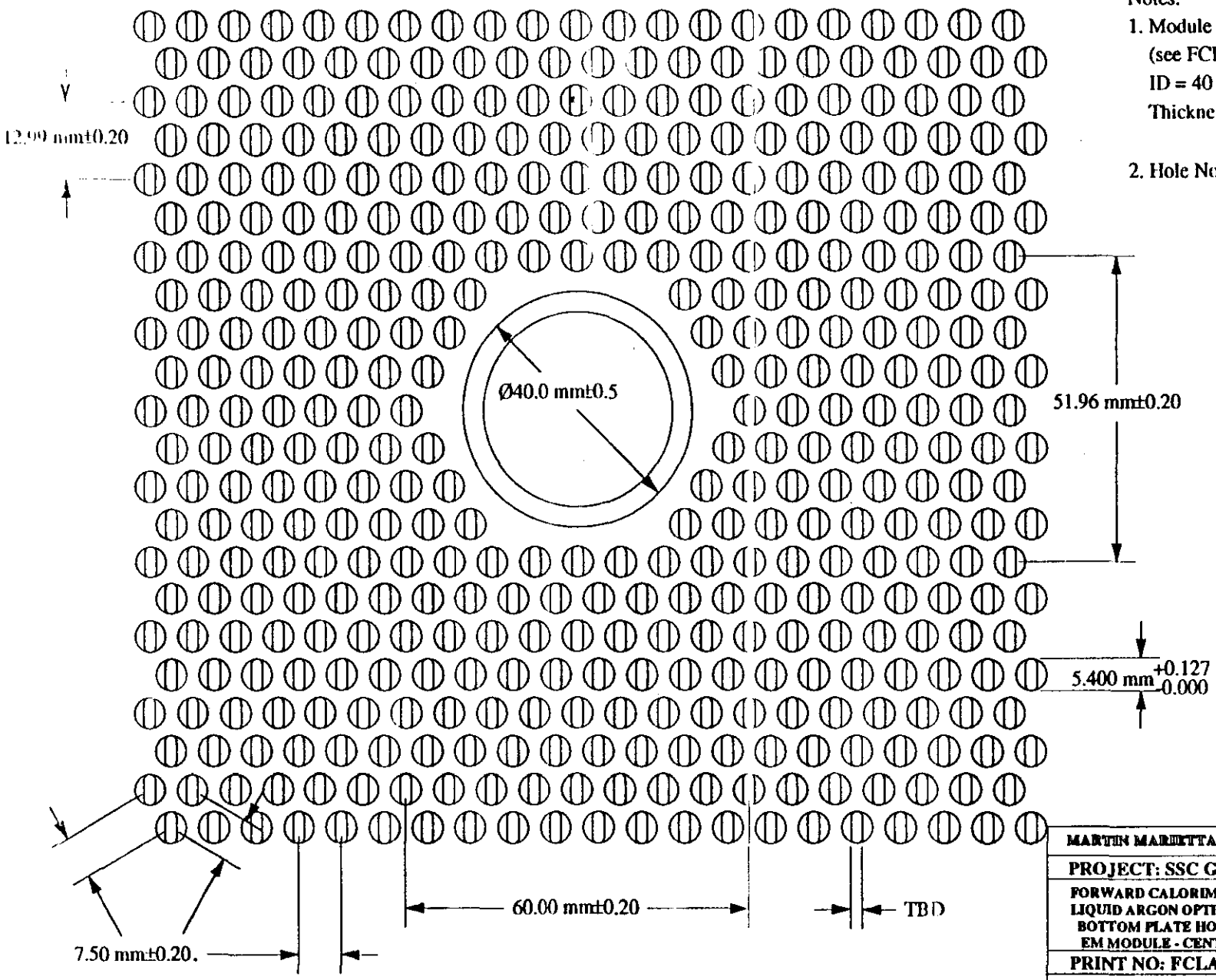

MARTIN MARIETTA ENERGY SYSTEMS

PROJECT: SSC GEM DETECTOR

FORWARD CALORIMETER
LIQUID ARGON OPTION
BOTTOM PLATE HOLE ARRANGEMENT
EM MODULE - CENTER

PRINT NO: FCLAR-SPD003 | REV 0

DRAWN BY: S. M. CHAE | 4/10/92

CHECKED & APPROVED BY:

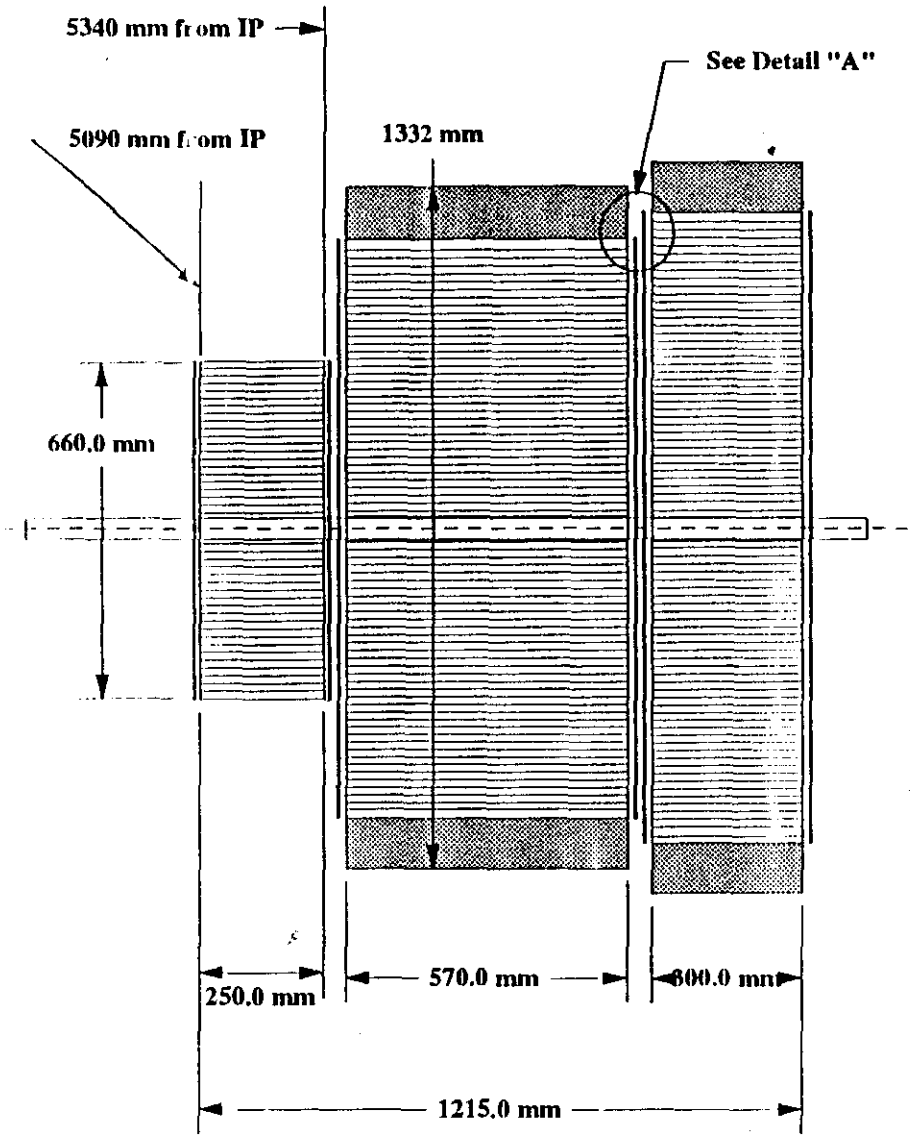

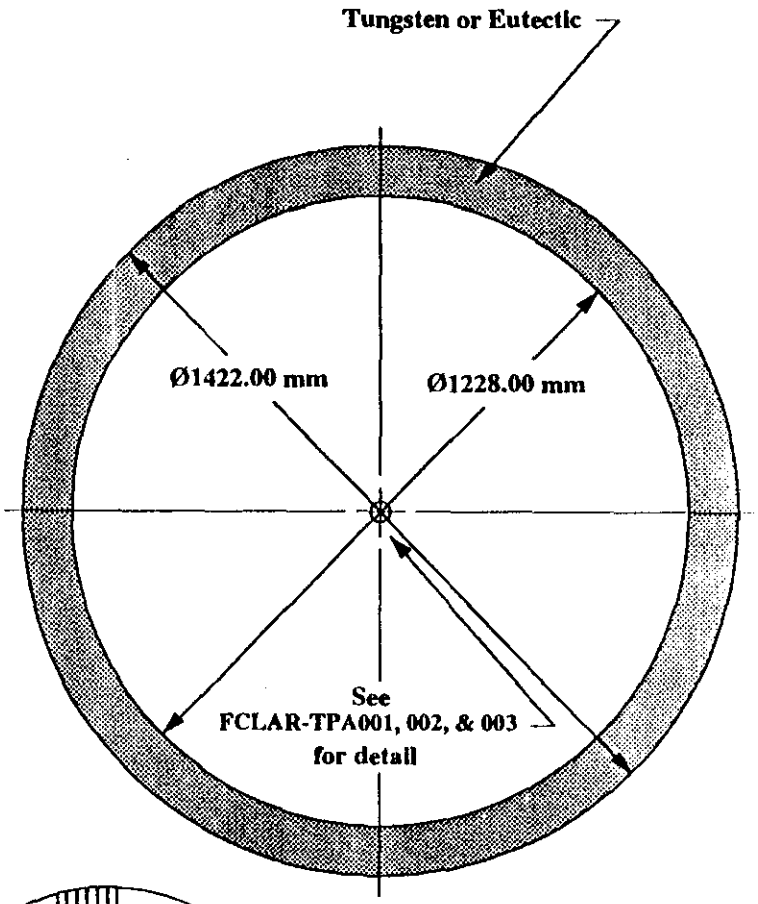

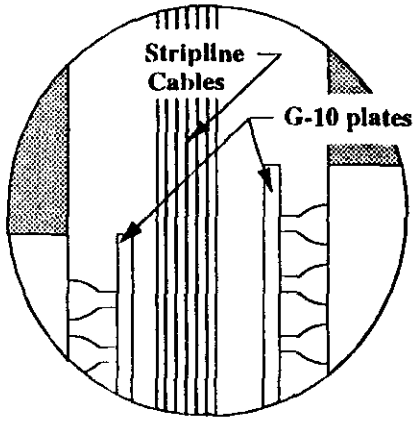

DETAIL "A" - G-10 ARRANGEMENT

MARTIN MARIETTA ENERGY SYSTEMS

PROJECT: SSC GEM DETECTOR

FORWARD CALORIMETER
LIQUID ARGON OPTION
MODULE ARRANGEMENT

PRINT NO: FCLAR-MD001 | REV 3

DRAWN BY: S. M. CHAE | 4/1/92

CHECKED & APPROVED BY:

	MODULES (units in mm)		
	EM	HADRONIC	Tail Catcher
A	7.50	8.155	8.853
B	5.00	5.436	5.902
C	4.80	4.836	5.302
D	0.10	0.30	0.30

Definitions:

"A" = Center to Center Distance
"B" = ID of Outer Tubes
"C" = OD of Inner Tubes
"D" = Liquid Argon Gap

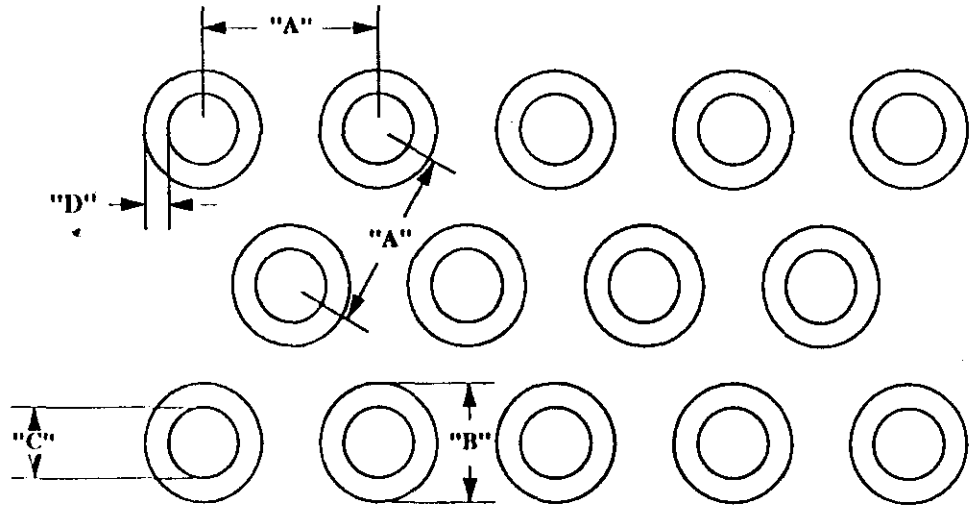

GENERAL TUBE ARRANGEMENT

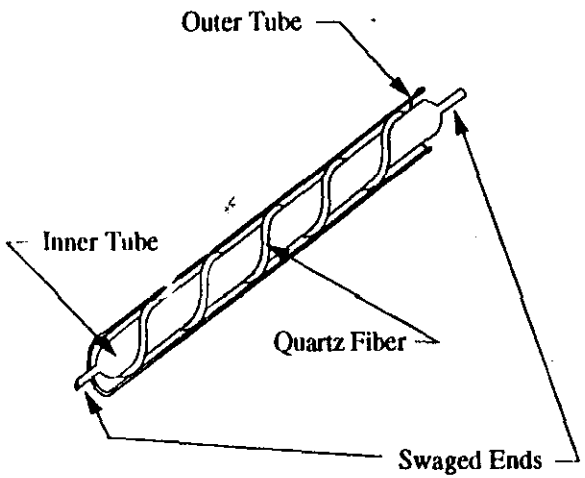

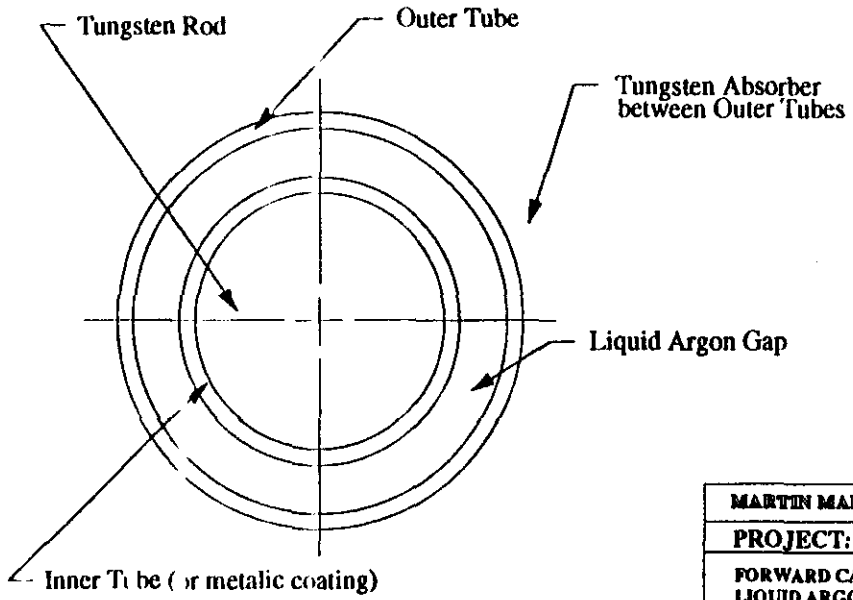

DETAIL ARRANGEMENT OF A POSITION

MARTIN MARIETTA ENERGY SYSTEMS	
PROJECT: SSC GEM DETECTOR	
FORWARD CALORIMETER LIQUID ARGON OPTION TUBE ARRANGEMENTS IN MODULES	
PRINT NO: FCLAR-MD002	REV 3
DRAWN BY: S. M. CHAE	4/1/92
CHECKED & APPROVED BY:	

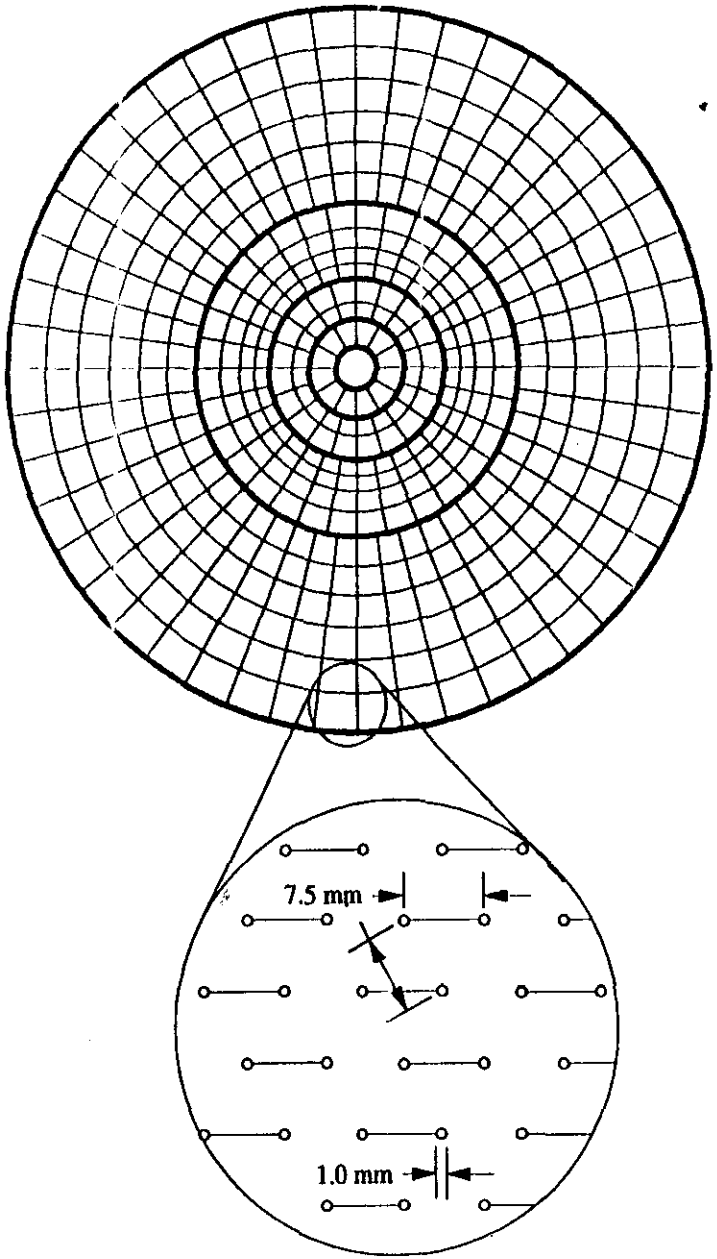

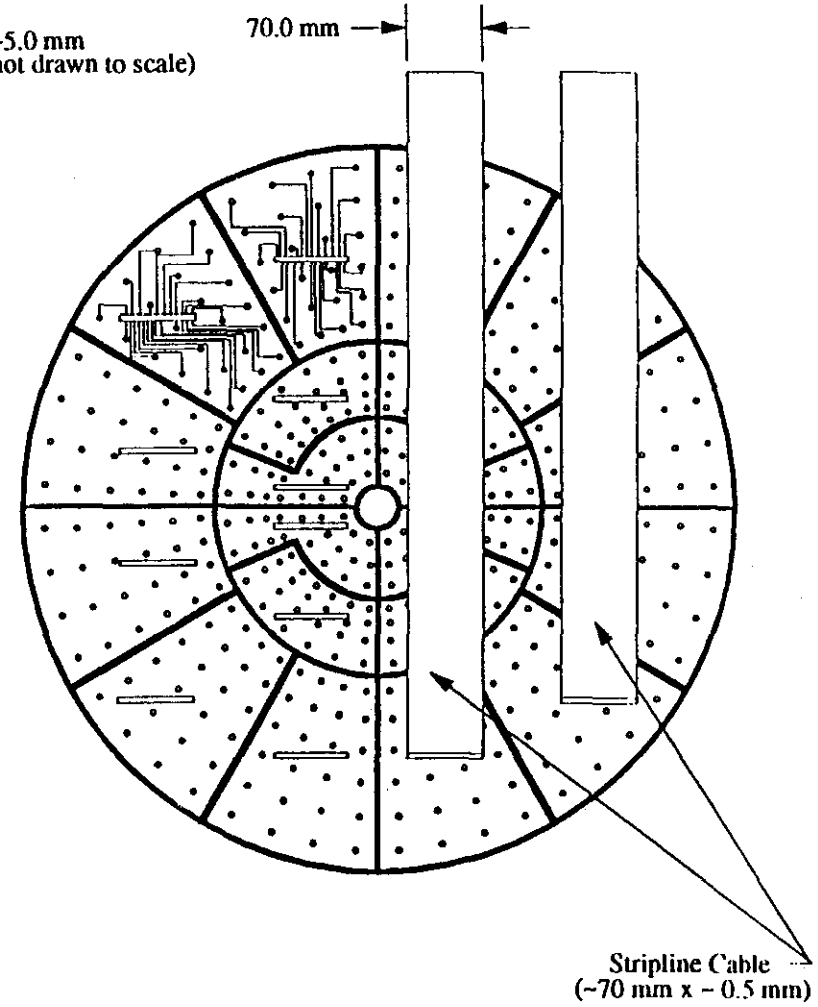

MARTIN MARIETTA ENERGY SYSTEMS

PROJECT: SSC GEM DETECTOR

FORWARD CALORIMETER
LIQUID ARGON OPTION
G-10 READ OUT PLATE DESIGN - EM

PRINT NO: FCLAR-RPD001 | REV 0

DRAWN BY: S. M. CHAE | 4/8/92

CHECKED & APPROVED BY:

3.1 WEIGHT & VOLUME CALCULATIONS

AREA & VOLUME CALCULATIONS:

(UNITS IN mm, mm^2, & mm^3 unless otherwise shown)

ID1	5.0000
ID2	5.4364
ID3	5.9017

AREA RATIO'S:

BARREL	TRIANGLE	CIRCLE IN TRI	CIRCLE RATIO	SS TUBE	RATIO
1	24.36	11.45	0.47	7.51	0.15
2	28.79	13.38	0.46	6.45	0.11
3	33.93	15.59	0.46	7.04	0.10

BARREL	W ROD	RATIO	LAr	RATIO	C to C
1	13.85	0.28	1.54	0.03	7.50
2	15.46	0.27	4.84	0.08	8.1545
3	18.87	0.28	5.28	0.08	8.8525

AREA, VOLUME & WEIGHT: (UNITS IN MM^2, MM^3 & METRIC TON)

	RADIUS	AREA	LENGTH	VOLUME	TUBE NO
BARREL 1	340	334725	250	83741071	6871
BARREL 2	566	994040	570	566845004	17261
BARREL 3	614	1171591	300	351905969	17263

AREA	BARREL 1	BARREL 2	BARREL 3	TOTAL
TUNGSTEN RODS	95197	266827	325759	687783
TUNGSTEN ABSORBER	177359	532235	633174	1342767
SS TUBES	51592	111416	121519	284527
LAr	10577	83562	91139	185278

VOLUME	BARREL 1	BARREL 2	BARREL 3	TOTAL
TUNGSTEN RODS	23816274	152156424	97846989	273819687
TUNGSTEN ABSORBER	44371312	303503691	190183836	538058839
SS TUBES	12907232	63534222	36500082	112941537
LAr	2646253	47650667	27375062	77671981
EUTECTIC (50% W)	4578789	220156407	124728666	349463861
MODULE BARREL	3144323	39420355	24120978	66685657

WEIGHT	BARREL 1	BARREL 2	BARREL 3	TOTAL
TUNGSTEN RODS	0.44	2.81	1.81	5.06
TUNGSTEN ABSORBER	0.82	5.61	3.52	9.95
SS TUBES	0.10	0.51	0.29	0.91
LAr	0.004	0.067	0.038	0.11
EUTECTIC (50% W)	0.07	3.17	1.80	5.03
MODULE BARREL	0.03	0.32	0.19	0.53
TOTAL WEIGHT	1.46	12.49	7.65	21.60

Structural Components Weight & Volume

Module Support Volume & Weight:

	VOLUME M^3	WEIGHT Metrc Ton
BARREL SUPPORT	0.14	1.11
BARREL STOPS	0.03	0.24
TOTAL	0.17	1.35

Vacuum Vessel Volume & Weight:

	VOLUME M^3	WEIGHT Metrc Ton
TOP COVER	0.23	1.83
MIDDLE SECTION	0.16	1.24
BOTTOM SECTION	0.00	0.04
TOTAL	0.39	3.12

Liquid Argon Vessel Volume & Weight:

	VOLUME M^3	WEIGHT Metrc Ton
TOP COVER	0.10	0.84
MIDDLE SECTION	0.26	2.09
BOTTOM SECTION	0.01	0.08
TOTAL	0.38	3.01

TOTAL WEIGHT & VOLUME:

	VOLUME M^3	WEIGHT Metrc Ton
TOTAL	0.93	7.48

3.2 ACTIVE THICKNESS CALCULATION

Active Thickness of Absorbers (MODULE 1)

Absorber: Tungsten Heavymet

Material	Density	Int Length	Percent	Metal IL	Actual IL
	g/cm^3	g/cm^2	% Vol	cm/L	cm/L
Absorber Composition			81.43%		
Copper	8.96	134.9	1.22%	15.06	1232.67
Nickle	1.21	96.6	2.85%	80.03	2808.25
Tungsten	19.30	185.0	77.36%	9.59	12.39
SS Tube	8.02	131.9	15.41%	16.45	106.70
Sense Material					
LAr	1.4000	117.2	3.16%	83.71	2649.15
					10.91
Totals	13.55		100%		10.91
Inverts	0.0738				0.0916

Hadron Make-up:
(By volume)

Material	Eutect.	Absorber	Total
Copper	30.0%	1.50%	
Nickle	70.0%	3.50%	
		0.00%	
		0.00%	
Mixing Material	100.0%	5.00%	
Tungsten		95.00%	
Absorber		100.00%	81.43%
SS Tube			15.41%
Lar			3.16%
			100.00%

Active Thickness of Absorbers (MODULE 2)

Absorber: Tungsten Heavymet

Material	Density	Int Length	Percent	Metal IL	Actual IL
	g/cm^3	g/cm^2	% Vol	cm/L	cm/L
Absorber Composition			80.39%		
Copper	8.96	134.9	1.21%	15.06	1248.64
Nickle	1.21	96.6	2.81%	80.03	2844.63
Tungsten	19.30	185.0	76.37%	9.59	12.55
SS Tube	8.02	131.9	11.21%	16.45	146.73
Sense Material					
LAr	1.4000	117.2	8.41%	83.71	995.85
					11.28
Totals	12.98		100%		11.28
Inverts	0.0771				0.0886

Hadron Make-up:
(By volume)

Material	Eutect.	Absorber	Total
Copper	30.0%	1.50%	
Nickle	70.0%	3.50%	
		0.00%	
		0.00%	
Mixing Material	100.0%	5.00%	
Tungsten		95.00%	
Absorber		100.00%	80.39%
SS Tube			11.21%
LAr			8.41%
			100.00%

Active Thickness of Absorbers (MODULE 3)

Absorber: Tungsten Heavymet

Material	Density	Int Length	Percent	Metal IL	Actual IL
	g/cm^3	g/cm^2	% Vol	cm/L	cm/L
Absorber Composition			81.85%		
Copper	8.96	134.9	1.23%	15.06	1226.31
Nickle	1.21	96.6	2.86%	80.03	2793.76
Tungsten	19.30	185.0	77.76%	9.59	12.33
SS Tube	8.02	131.9	10.37%	16.45	158.56
Sense Material					
LAr	1.4000	117.2	7.78%	83.71	1076.15
					11.35
Totals	13.34		100%		11.35
Inverts	0.0750				0.0881

Hadron Make-up:
(By volume)

Material	Eutect.	Absorber	Total
Copper	30.0%	1.50%	
Nickle	70.0%	3.50%	
		0.00%	
		0.00%	
Mixing Material	100.0%	5.00%	
Tungsten		95.00%	
Absorber		100.00%	81.85%
SS Tube			10.37%
LAr			7.78%
			100.00%

4.0 VENDOR'S PRICE QUOTE

GTE PRODUCTS CORPORATION
CHEMICAL AND METALLURGICAL DIVISION
TOWANDA, PA 18848

Divisional Engineering

FAX #(717) 265-1450
VN 8-765-1450
Public Telephone (717) 265-2121, EXT. 2660

TELECOPY COVER SHEET

TO: STEVE CHAE

LOCATION: OAK RIDGE FAX NUMBER: 615/574-7986

NUMBER OF PAGES INCLUDING COVER SHEET: 2

STEVE
LET ME KNOW IF YOU NEED
ANY MORE

FROM: JIM MULLENDORE

DATE: 4/13/92 VOICE-NET: 717/265-1475

FOR-30.6
09/29/88

SYLVANIA Chemicals/Metals

GTE

Hawes Street
Towanda, PA 18848
717 265-2121
TWX 510 671-4561

FAX

April 13, 1992

Mr. Steve Chae
Oak Ridge National Labs
Oak Ridge, TN

Dear Steve:

SUBJECT: Oak Ridge SSC GEM DETECTOR FABRICATION

We will press and sinter quarter-circle slabs just over two inches thick. The composition will be 95W, 4.5 Ni, 0.5 Fe or 95W, 4 Ni, 1 Cu. We would prefer the Ni-Fe alloy but will consider the Ni-Cu alloy. Four quarter-circle slabs will be brazed together to form the full circular slab. A tongue and groove joint will be used. The brazing will be done in two steps. Matching tongues and grooves will be machined into quarter-circle pairs and they will be brazed together to form a hemi-circle. The hemi-circle can then be machined with matching tongues and grooves and brazed together. A lower temperature braze will be used for the second brazing operation. In both brazing operations gravity will be used to insure a tight joint with no gaps. A special furnace will be built for the brazing operation. After brazing the disc will be turned to finish diameter and turned and ground to thickness. That operation will be done off-site. The holes will then be drilled using a vertical machining center. For each disc of each module locating pins will be used to insure an accurate alignment of the holes when the discs are assembled to form one module. The tolerance of the holes is estimated at ±0.005 inch largely due to drill wear during drilling. If a lower tolerance is required, the holes could then be reamed but that would add about $380,000 to the price. Total fabrication time for a unit is largely dependent on the drilling operation and is estimated as 24 months and 36 months if reaming is required.

Sincerely,

James A. Mullendore

lw

Price: $3,980,000 for both sides per telephone conversation on 4/9/92 (See attached Fax)

GTE PRODUCTS CORPORATION
CHEMICAL AND METALLURGICAL DIVISION
TOWANDA, PA 18848

DIVISION ENGINEERING

FAX #(717)265-1450
VN 8-765-1450
PUBLIC TELEPHONE (717) 265-2121, EXT. 2660

TELECOPY COVER SHEET

TO: STEVE CHAE

LOCATION: OAK RIDGE FAX NUMBER: 615/574-7986

NUMBER OF PAGES INCLUDING COVER SHEET: 1

ESTIMATE COST OF DETECTOR OF
$1,990,000

FROM: JIM MULLENDORE

DATE: 4/9/92 VOICE-NET: 717/265-1975

SCINTILLATING LIQUID OPTION

FORWARD CALORIMETER
SCINTILLATING LIQUID OPTION

INDEX

1.0 COST ESTIMATES

- 1.1 SCINT LIQUID FCAL COST ESTIMATE TABLE
- 1.2 MATERIAL COST
- 1.3 MANUFACTURING PROCESS FLOW DIAGRAM
- 1.4 COST OF MANUFACTURING EQUIPMENT
- 1.5 COST OF MANUFACTURING MANPOWER
- 1.6 INSTALLATION COST

2.0 SCINTILLATING LIQUID FCAL DRAWINGS

- 2.1 PARAMETER TABLE
- 2.2 GENERAL ARRANGEMENT & DETAIL DRAWINGS

3.0 CALCULATIONS

- 3.1 TOWER SIZE CALCULATION
- 3.2 WEIGHT & VOLUME CALCULATIONS
- 3.3 ACTIVE THICKNESS OF EUTECTIC

4.0 VENDOR'S PRICE QUOTE

1.1 SCINTILLATING LIQUID FCAL COST ESTIMATE TABLE

SCINTILLATING LIQUID OPTION FORWARD CALORIMETER

COST ESTIMATE SUMMARY

	ENGR/DESIGN M&S and INSPECTION	PROC/FAB MATERIAL	LABOR ASSEMBLY	LABOR INSTALLATION	SUBTOTAL
CONSTRUCTION	$2,481K	$6,726K	$1,179K	$252K	$10,638K
R&D	$484K	$582K	$294K	$0K	$1,360K
ENGINEERING	$271K	$0K	$0K	$0K	$271K
SUBTOTAL	$3,236K	$7,307K	$1,474K	$252K	$12,269K

	COST	PERCENTAGE
R&D	$1,360K	16.76%
EDIA	$2,753K	30.59%
CONSTRUCTION	$8,111K	
CONTINGENCY	$4,139K	38.11%
TOTAL	$16,362K	

Spaghetti Forward Calorimeter WBS Costs

Spaghetti Forward Calorimeter WBS Costs

WBS	Item	Engineering/design Labor my	Engineering/design Rate k$/my	Engineering/design Total k$	M&S Material k$	Inspection/Admin Labor my	Inspection/Admin Rate k$/my	Inspection/Admin Total k$	Proc/Fab Material k$	Assembly Labor my	Assembly Rate k$/my	Assembly Subtotal k$	Assembly Material k$	Assembly Total k$	Installation/Assembly Labor my	Installation/Assembly Rate k$/my	Installation/Assembly Subtotal k$	Installation/Assembly Material k$	Installation/Assembly Total k$	Totals Labor k$	Totals Material k$	Totals Subtotal k$	Totals Contlng. k$	Totals Total k$
5.2.2.5.																								
	Total Saint Liquid FCAL Cost	18.1		2486.3	124.3	5.8		625.8	7307.4	28.8		1473.5	0.0	1473.5	4.5		252.0	0.0	252.0	4789.9	7431.7	12222.6	4138.4	16362.0
.0 .2.4 .0	Sci Liq FCAL Construction	13.1	135	1767.1	88.4	5.8	107	625.8	6726.2	21.4	55	1179.2	0.0	1179.2	4.5		252.0	0.0	252.0	3777.5	6814.3	10591.8	3527.6	14119.3
.0 .2.4 .1	Tower Assemblies	1.9		201.8	10.1	1.9		205.1	4058.3	20.1		1107.7	0.0	1107.7	0.8		46.6	0.0	46.6	1514.6	4068.4	5583.0	1823.6	7406.6
.0 .2.4 .1 .1	Stainless Steel Tubing	0.0	0	0.0	0.0	0.0	0	0.0	1171.6											0.0	1171.6	1171.6	310.0	1481.6
.0 .2.4 .1 .1 .1	3 mm Stainless Steel Tubes	0.0	108	0	0	0.0	0	0	538											0	538	538	145	684
.0 .2.4 .1 .1 .2	Coating Material	0.0	108	0	0	0.0	0	0	633											0	633	633	165	798
.0 .2.4 .1 .2	Absorber	0.0	108	0.0	0.0	0.0	0	0.0	1855.2											0.0	1855.2	1855.2	362.8	2217.8
.0 .2.4 .1 .2 .1	Pure Tungsten Shots	0.0	108	0	0	0.0	0	0	1510											0	1510	1510	544	2054
.0 .2.4 .1 .2 .2	Woods Metal	0.0	108	0	0	0.0	0	0	145											0	145	145	19	164
.0 .2.4 .1 .3	Tower Assemblies	0.2	108	24.8	1.2	0.0	0	0.0	113.0											24.8	114.2	138.8	24.9	163.7
.0 .2.4 .1 .3 .1	Sheaths	0.1	108	9	0	0.0	0	0	63											9	64	73	12	85
.0 .2.4 .1 .3 .2	Fasteners	0.0	108	2	0	0.0	0	0	19											2	19	21	4	25
.0 .2.4 .1 .3 .3	Top/Bottom Plates	0.0	108	5	0	0.0	0	0	28											5	28	33	6	39
.0 .2.4 .1 .3 .4	Spacer Plates	0.1	108	9	0	0.0	0	0	3											9	3	12	3	15
.0 .2.4 .1 .4	Readout Assembly	0.1	108	8.2	0.3	0.0	0	0.0	75.0	0.0		0	0	0						8.2	75.3	81.5	9.6	91.1
.0 .2.4 .1 .4 .1	Readout Fiber	0.0	108	4	0	0.0	0	0	56											4	56	60	7	67
.0 .2.4 .1 .4 .2	Woods Metal	0.0	108	0	0	0.0	0	0	12											0	12	12	1	13
.0 .2.4 .1 .4 .3	Fastener	0.0	108	2	0	0.0	0	0	8											2	8	10	2	12
.0 .2.4 .1 .5	Assembly	1.1	0	117.0	5.9	1.8	0	198.2	401.0	20.1		1107.7	0.0	1107.7						1420.9	406.8	1827.7	541.3	2369.0
.0 .2.4 .1 .5 .1	Station one	0.2		18.0	0.9	0.5		53.5	30.0	3.2		174.4	0	174.4						245.9	30.9	276.8	64.5	341.2
.0 .2.4 .1 .5 .1 .1	Station One assy	0.2	108	18	1	0.5	107	54		3.2	55	174		174						246	1	247	57	304
.0 .2.4 .1 .5 .1 .2	3 mm Tube Cutting Machine								20											0	20	20	7	27
.0 .2.4 .1 .5 .1 .3	Spacer Alignment Fixture								5											0	5	5	1	6
.0 .2.4 .1 .5 .1 .4	Spacer Expansion Fixture								5											0	5	5	1	6
.0 .2.4 .1 .5 .2	Station two	0.2		18	1	0.3		27	26	1.1		58	0	58						103	27	130	32	162
.0 .2.4 .1 .5 .2 .1	Station Two assy	0.2	108	18	1	0.3	107	27		1.1	55	58		58						103	1	104	26	130
.0 .2.4 .1 .5 .2 .2	Readout Fiber Cutting Machine								25											0	25	25	6	31
.0 .2.4 .1 .5 .2 .3	Spacer Alignment Fixture								1											0	1	1	0	1
.0 .2.4 .1 .5 .3	Station three	0.2		18	1	0.3		27	214	2.1		117	0	117						161	215	376	118	494
.0 .2.4 .1 .5 .3 .1	Station Three assy	0.2	108	18	1	0.3	107	27		2.1	55	117		117						161	1	162	52	214
.0 .2.4 .1 .5 .3 .2	Large Casting System								125											0	125	125	39	164
.0 .2.4 .1 .5 .3 .3	Tower Molds								48											0	48	48	15	63
.0 .2.4 .1 .5 .3 .4	Readout Section Molds								18											0	18	18	6	24
.0 .2.4 .1 .5 .3 .5	Setup Stand								15											0	15	15	5	20
.0 .2.4 .1 .5 .3 .6	Personnel Platform								8											0	8	8	2	10
.0 .2.4 .1 .5 .4	Station Four	0.1		9	0	0.3		27	14	1.4		74	0	74						110	14	124	40	164
.0 .2.4 .1 .5 .4 .1	Station Four assy	0.1	108	9	0	0.3	107	27		1.4	55	74		74						110	0	110	35	146
.0 .2.4 .1 .5 .4 .2	Setup Stand								10											0	10	10	3	13
.0 .2.4 .1 .5 .4 .3	Personnel Platform								4											0	4	4	1	5
.0 .2.4 .1 .5 .5	Station Five	0.2		18	1	0.3		27	17	11.1		611	0	611						656	18	674	215	889
.0 .2.4 .1 .5 .5 .1	Station Five assy	0.2	108	18	1	0.3	107	27		11.1	55	611		611						656	1	657	210	867
.0 .2.4 .1 .5 .5 .2	Sheath Assembly Stand(Tower)								10											0	10	10	3	13
.0 .2.4 .1 .5 .5 .3	Sheath Assembly Stand(Readout)								3											0	3	3	1	4
.0 .2.4 .1 .5 .5 .4	Personnel Platform								4											0	4	4	1	5
.0 .2.4 .1 .5 .6	Station Six	0.2		18.0	0.9	0.3		28.8	33.0	1.3		73.2	0.0	73.2						118	34	152	48	200
.0 .2.4 .1 .5 .6 .1	Station Six assy	0.2	108	18	1	0.3	107	27		1.3	55	73		73						118	1	119	38	157
.0 .2.4 .1 .5 .6 .2	Tower Fixture								10											0	10	10	3	13
.0 .2.4 .1 .5 .6 .3	Tower Assembly Stand								15											0	15	15	5	20
.0 .2.4 .1 .5 .6 .4	Personnel Platform								8											0	8	8	2	10
.0 .2.4 .1 .5 .7	Assembly equipment	0.2		18	1	0.1		9	87	0.0		0	0	0						27	88	95	23	118
.0 .2.4 .1 .5 .7 .1	General Assembly Equipment	0.2	108	18	1	0.1	107	9		0.0	0	0		0						27	1	28	7	35
.0 .2.4 .1 .5 .7 .2	Clothing								10											0	10	10	2	12
.0 .2.4 .1 .5 .7 .3	Cleaning Supplies								5											0	5	5	1	6
.0 .2.4 .1 .5 .7 .4	Work Tables								12											0	12	12	3	15
.0 .2.4 .1 .5 .7 .5	Tools								10											0	10	10	3	13
.0 .2.4 .1 .5 .7 .6	Temporary Use Items								20											0	20	20	5	25
.0 .2.4 .1 .5 .7 .7	Handling Carts (10-50 T)								10											0	10	10	3	13

Spaghetti Forward Calorimeter WBS Costs

Spaghetti Forward Calorimeter WBS Costs

WBS	Item	Engineering/design Labor my	Engineering/design Rate k$/my	Engineering/design Total k$	M&S Material k$	Inspection/Admin Labor my	Inspection/Admin Rate k$/my	Inspection/Admin Total k$	Proc/Fab Material k$	Assembly Labor my	Assembly Rate k$/my	Assembly Subtotal k$	Assembly Material k$	Assembly Total k$	Installation/Assembly Labor my	Installation/Assembly Rate k$/my	Installation/Assembly Subtotal k$	Installation/Assembly Material k$	Installation/Assembly Total k$	Totals Labor k$	Totals Material k$	Totals Subtotal k$	Totals Contng. k$	Totals Total k$
.0 .2.4 .1 .6	Calibration Loops	0.5	108	54	3	0.1	107	9	643											63	645	708	375	1083
.0 .2.4 .2	Module Assembly & Test	0.8		81.0	4.1	0.7		77.6	420.7	1.3		71.5	0.0	71.5	0.2		9.2	0.0	9.2	239.2	424.8	664.0	187.7	851.7
.0 .2.4 .2 .1	Structural Support Tube & Bars	0.2	108	18	1	0.3	107	32	169						0.2	55	9		9	59	170	229	69	298
.0 .2.4 .2 .2	Outer Ring	0.3	108	27	1	0.3	107	32	109											59	110	169	51	220
.0 .2.4 .2 .3	Module Assembly	0		9	0	0		4	80	0.5		29.7	0.0	29.7						43	80	124	30	154
.0 .2.4 .2 .3 .1	Station Seven	0.1		9.0	0.5	0.0		4.5	80.0	0.5		29.7	0.0	29.7						43.2	80.5	123.6	29.9	153.5
.0 .2.4 .2 .3 .1 .1	Station Seven assy	0.1	108	9	0	0.0	107	4		0.5	55	30		30						43	0	44	10	53
.0 .2.4 .2 .3 .1 .2	Module Assembly Stand								35											0	35	35	8	43
.0 .2.4 .2 .3 .1 .3	Module Lifting Fixture								45											0	45	45	13	58
.0 .2.4 .2 .4	Assembly Test	0.3	0	27.0	1.4	0.1		8.9	63.0	0.8		41.8	0.0	41.8						77.7	64.4	142.1	38.3	180.4
.0 .2.4 .2 .4 .1	Station Eight	0.3		27.0	1.4	0.1		8.9	63.0	0.8		41.8	0	41.8						77.7	64.4	142.1	38.3	180.4
.0 .2.4 .2 .4 .1 .1	Station Eight assy	0.3	108	27	1	0.1	107	9		0.8	55	42		42						78	1	79	22	101
.0 .2.4 .2 .4 .1 .2	Assembly Test Stand								25											0	25	25	6	31
.0 .2.4 .2 .4 .1 .3	Temporary Bracing								15											0	15	15	4	19
.0 .2.4 .2 .4 .1 .4	Temporary Wiring Harnesses								10											0	10	10	3	13
.0 .2.4 .3 .4 .1 .5	Op Test Sources / Counters								5											0	5	5	1	6
.0 .2.4 .2 .4 .1 .6	Personnel Platform								8											0	8	8	2	10
.0 .2.4 .3	Electronics	0.6		72	4	0.6		64	1414	0.0		0	0	0						137	1418	1555	540	2094
.0 .2.4 .3 .1	Photomultiplier Tubes	0.1	124	10	1	0.1	107	11	998											21	999	1020	337	1357
.0 .2.4 .3 .2	Light Mixers	0.1	124	10	1	0.1	107	11	42											21	42	63	19	82
.0 .2.4 .3 .3	Electronic Readout	0.5	124	62	3	0.5	107	54	418											116	419	535	203	738
.0 .2.4 .4	Thermal Control	0.3		36	2	0.1		11	100	0.0		0	0	0						47	102	149	65	214
.0 .2.4 .4 .1	Heat Transfer System	0.2	108	18	1	0.1	107	5	50											23	51	74	33	107
.0 .2.4 .4 .2	Heat Exchangers	0.2	108	18	1	0.1	107	5	50											23	51	74	33	107
.0 .2.4 .5	Beam Test/Calibration	0.6		93.0	4.7	0.3		30.0	350.0	0.0		0	0	0						123.0	354.7	477.6	152.9	630.5
.0 .2.4 .5 .1	Test Stands	0.3	124	31	2	0.1	107	9	250											40	252	291	84	376
.0 .2.4 .5 .2	Manpower	0.0	0	0	0	0.1	107	11												11	0	11	3	14
.0 .2.4 .5 .3	Beam Calibration System	0.5	124	62	3	0.1	107	11	100											73	103	176	65	241
.0 .2.4 .6	Liquid Handling System	1.1		121.5	6.1	0.3		27.8	247.5	0.0		0.0	0.0	0.0	2.7		149.6	0.0	149.6	298.9	253.6	552.5	237.7	790.2
.0 .2.4 .6 .1	Pump	0.0	108	5	0	0.0	107	2	40		55	0		0	0.1	55	7		7	13	40	53	22	75
.0 .2.4 .6 .2	Piping	0.1	108	9	0	0.0	107	4	7		55	0		0	0.6	55	33		33	46	8	54	20	74
.0 .2.4 .6 .3	Filtration & Purification	0.5	108	54	3	0.1	107	11	100		55	0		0	1.0	55	55		55	120	103	222	98	320
.0 .2.4 .6 .4	Storage & Monitoring	0.5	108	54	3	0.1	107	11	100		55	0		0	1.0	55	55		55	120	103	222	98	320
.0 .2.4 .7	FCAL Assembly Installation	0.7		83.5	4.2	2.0		210.4	135.0	0.0		0.0	0	0.0	0.8		46.6	0	46.6	340.6	139.2	479.7	113.9	593.7
.0 .2.4 .7 .1	Manpower	0.3	154	39	2	0.2	107	18							0.8	56	47		47	103	2	105	29	134
.0 .2.4 .7 .2	Installation Equipment	0.4	0	45.0	2.3	1.8	0	192.6	135.0						0.0		0	0	0	237.6	137.3	374.9	84.6	459.4
.0 .2.4 .7 .2 .1	Rails	0.2	108	18	1	1.5	107	161	30											179	31	209	46	258
.0 .2.4 .7 .2 .2	Transport Cart	0.1	108	9	0	0.1	107	11	40											20	40	60	13	73
.0 .2.4 .7 .2 .3	Temporary Bracing	0.1	108	9	0	0.1	107	11	40											20	40	60	13	73
.0 .2.4 .7 .2 .4	Crane	0.1	108	9	0	0.1	107	11	25											20	25	45	10	55
.0 .2.4 .8	Subsystem Management	7.0		1078.0	53.9				0.0						0.0		0	0	0	1078.0	53.9	1131.9	406.7	1538.6
.0 .2.4 .8 .1	Project Management	4.0	154	616	31															616	31	647	233	880
.0 .2.4 .8 .2	Resource Management	1.0	154	154	8															154	8	162	58	220
.0 .2.4 .8 .3	ES&H	0.5	154	77	4															77	4	81	28	109
.0 .2.4 .8 .4	Quality Assurance	0.5	154	77	4															77	4	81	27	108
.0 .2.4 .8 .5	System Integration	1.0	154	154	8															154	8	162	60	222

Spaghetti Forward Calorimeter WBS Costs

Spaghetti Forward Calorimeter WBS Costs

WBS	Item	Engineering/design Labor my	Engineering/design Rate k$/my	Engineering/design Total k$	M&S Material k$	Inspection/Admin Labor my	Inspection/Admin Rate k$/my	Inspection/Admin Total k$	Proc/Fab Material k$	Assembly Labor my	Assembly Rate k$/my	Assembly Subtotal k$	Assembly Material k$	Assembly Total k$	Installation/Assembly Labor my	Installation/Assembly Rate k$/my	Installation/Assembly Subtotal k$	Installation/Assembly Material k$	Installation/Assembly Total k$	Totals Labor k$	Totals Material k$	Totals Subtotal k$	Totals Conting. k$	Totals Total k$
.1 .2.4 .0	Scint Liquid FCAL R&D	2.9	0.0	460.8	23.0				581.5	5.4		294.3	0.0	294.3						755.1	604.5	1359.6	611.8	1971.4
.1 .2.4 .1	Material Tests	0.7		105	5				40	0.4		22.0		22.0						127.3	45.3	172.6	77.7	250.3
.1 .2.4 .1 .1	Oil / Fiber Testing	0.3	158	53	3				20	0.2	55	11		11						64	23	88	39	125
.1 .2.4 .1 .2	Tungsten Eutectic Testing/Dev	0.3	158	53	3				20	0.2	55	11		11						64	23	88	39	125
.1 .2.4 .2	Single Tower Prototype	0.6		92	5				57	0.9		46.8		46.8						136.9	61.7	200.6	90.3	290.8
.1 .2.4 .2 .1	Tower Assembly	0.3	158	40	2				22	0.2	55	11		11						51	24	75	34	108
.1 .2.4 .2 .2	Electronics	0.2	158	26	1				15	0.2	55	11		11						37	16	54	24	78
.1 .2.4 .2 .3	Assembly/Test Frame	0.1	158	13	1				10	0.2	55	11		11						24	11	35	16	50
.1 .2.4 .2 .4	Thermal Control	0.1	158	13	1				10	0.3	55	14		14						27	11	38	17	54
.1 .2.4 .3	36 Tower Prototype	0.8		132	7				484	2.5		137.5	0.0	137.5						269.2	491.0	760.2	342.1	1102.2
.1 .2.4 .3 .1	Tower Assembly	0.3	158	40	2				337	0.8	55	41		41						81	339	420	189	609
.1 .2.4 .3 .2	Electronics	0.3	158	40	2				72	0.8	55	41		41						81	74	155	70	224
.1 .2.4 .3 .3	Assembly/Test Frame	0.1	158	13	1				10	0.5	55	28		28						41	11	51	23	74
.1 .2.4 .3 .4	Thermal Control	0.1	158	13	1				15	0.3	55	14		14						27	16	43	19	62
.1 .2.4 .3 .6	Beam Testing	0.2	158	26	1				50	0.3	55	14		14						40	51	91	41	133
.1 .2.4 .4	Manufacturing Development	0.8		131.7	8.6					1.6		88.0	0.0	88.0						219.7	8.6	228.3	101.8	328.1
.1 .2.4 .4 .1	Tube Cutting	0.2	158	26	1					0.3	55	17		17						43	1	44	20	64
.1 .2.4 .4 .2	Readout Assembly	0.2	158	26	1					0.5	55	28		28						54	1	55	25	80
.1 .2.4 .4 .3	Casting	0.3	158	53	3					0.5	55	28		28						80	3	83	37	120
.1 .2.4 .4 .4	Tower Handling	0.2	158	26	1					0.3	55	17		17						43	1	44	20	64
.2 .2.4 .0	Sci Liq FCAL Concep/Pre Design	2.1	124	258	13															258	13	271	0	271
.2 .2.4 .1	Preparation of LoI	0.6		72	4															72	4	76	0	76
.2 .2.4 .1 .1	Conceptual Design	0.3	124	31	2															31	2	33	0	33
.2 .2.4 .1 .2	Costing Studies	0.3	124	31	2															31	2	33	0	33
.2 .2.4 .1 .3	Document Preparation	0.1	124	10	1															10	1	11	0	11
.2 .2. .2	Prep of Tech Prop.	1.5		186	9															186	9	195	0	195
.2 .2. .2 .1	Conceptual Design	0.5	124	62	3															62	3	65	0	65
.2 .2. .2 .2	Costing Studies	0.3	124	41	2															41	2	43	0	43
.2 .2. .2 .3	Manufacturing Studies	0.3	124	31	2															31	2	33	0	33
.2 .2. .2 .4	Installation Studies	0.3	124	31	2															31	2	33	0	33
.2 .2. .2 .5	Prep of Tech Prop	0.2	124	21	1															21	1	22	0	22

R&D	1359.58	16.76%
EDIA	2752.52	30.59%
Construc	8110.52	
Continge	4139.37	38.11%
Total	16362	

WBS	Item	No.	Units	Estimate Type	Risk factors Technic	Cost	Schedule	Risk percentages Tech	Cost	Schedule	Tot Cont Prec
5.2.2.1.											
	Total Saint Liquid FCAL Cost										
.0 .2.4 .0	Sat Liq FCAL Construction										
.0 .2.4 .1	Tower Modules										
.0 .2.4 .1 .1	Stainless Steel Tubing										
.0 .2.4 .1 .1 .1	3 mm Stainless Steel Tubes		M	BU	3	3	3	3%	3%	3%	27%
.0 .2.4 .1 .1 .2	Coating Material		M	BU	4	4	1	3%	3%	2%	28%
.0 .2.4 .1 .2	Absorber										
.0 .2.4 .1 .2 .1	Pure Tungsten Shots		M^2	BU	5	5	3	3%	3%	2%	36%
.0 .2.4 .1 .2 .2	Woods Metal		M^2	BU	3	3	1	2%	2%	1%	13%
.0 .2.4 .1 .3	Tower Modules										
.0 .2.4 .1 .3 .1	Sheaths		MTons	BU	2	3	1	3%	3%	2%	17%
.0 .2.4 .1 .3 .2	Fasteners		MTons	BU	2	3	1	3%	3%	2%	17%
.0 .2.4 .1 .3 .3	Top/Bottom Plates		MTons	BU	2	3	2	3%	3%	2%	19%
.0 .2.4 .1 .3 .4	Spacer Plates		MTons	BU	3	3	2	3%	3%	2%	22%
.0 .2.4 .1 .4	Readout Assembly										
.0 .2.4 .1 .4 .1	Readout Fiber		MTons	BU	3	3	1	2%	1%	2%	11%
.0 .2.4 .1 .4 .2	Woods Metal		MTons	BU	3	3	1	2%	1%	2%	11%
.0 .2.4 .1 .4 .3	Fastener		MTons	BU	2	3	1	3%	3%	2%	17%
.0 .2.4 .1 .5	Assembly										
.0 .2.4 .1 .5 .1	Station one										
.0 .2.4 .1 .5 .1 .1	Station One assy	1	Each	BU	4	3	1	4%	2%	1%	23%
.0 .2.4 .1 .5 .1 .2	3 mm Tube Cutting Machine	5	Each	BD	4	4	3	3%	3%	3%	33%
.0 .2.4 .1 .5 .1 .3	Spacer Alignment Fixture	5	Each	BD	2	2	1	3%	2%	1%	11%
.0 .2.4 .1 .5 .1 .4	Spacer Expansion Fixture	5	Each	BD	2	2	1	3%	2%	1%	11%
.0 .2.4 .1 .5 .2	Station two										
.0 .2.4 .1 .5 .2 .1	Station Two assy	1	Each	BU	4	3	1	3%	4%	1%	25%
.0 .2.4 .1 .5 .2 .2	Readout Fiber Cutting Machine	7	Each	BD	4	3	1	3%	4%	1%	25%
.0 .2.4 .1 .5 .2 .3	Spacer Alignment Fixture	7	Each	BD	4	3	1	3%	4%	1%	25%
.0 .2.4 .1 .5 .3	Station three										
.0 .2.4 .1 .5 .3 .1	Station Three assy	1	Each	BU	4	3	1	4%	5%	1%	32%
.0 .2.4 .1 .5 .3 .2	Large Casting System	4	Each	BD	3	5	1	3%	4%	2%	31%
.0 .2.4 .1 .5 .3 .3	Tower Molds	4	Each	BD	3	5	1	3%	4%	2%	31%
.0 .2.4 .1 .5 .3 .4	Readout Section Molds	4	Each	BD	3	5	1	3%	4%	2%	31%
.0 .2.4 .1 .5 .3 .5	Setup Stand	4	Each	BD	3	5	1	3%	4%	2%	31%
.0 .2.4 .1 .5 .3 .6	Personnel Platform	4	Each	BD	3	5	1	3%	4%	1%	30%
.0 .2.4 .1 .5 .4	Station Four										
.0 .2.4 .1 .5 .4 .1	Station Four assy	1	Each	BU	4	3	1	4%	5%	1%	32%
.0 .2.4 .1 .5 .4 .2	Setup Stand	1	Each	BD	3	5	1	3%	4%	1%	30%
.0 .2.4 .1 .5 .4 .3	Personnel Platform	1	Each	BD	3	5	1	3%	4%	1%	30%
.0 .2.4 .1 .5 .5	Station Five										
.0 .2.4 .1 .5 .5 .1	Station Five assy	1	Each	BU	4	3	1	4%	5%	1%	32%
.0 .2.4 .1 .5 .5 .2	Sheath Assembly Stand(Tower)	2	Each	BD	3	5	1	3%	4%	1%	30%
.0 .2.4 .1 .5 .5 .3	Sheath Assembly Stand(Readout)	2	Each	BD	3	5	1	3%	4%	1%	30%
.0 .2.4 .1 .5 .5 .4	Personnel Platform	2	Each	BD	3	5	1	3%	4%	1%	30%
.0 .2.4 .1 .5 .6	Station Six										
.0 .2.4 .1 .5 .6 .1	Station Six assy	1	Each	BU	4	3	1	4%	5%	1%	32%
.0 .2.4 .1 .5 .6 .2	Tower Fixture	2	Each	BD	3	5	1	3%	4%	1%	30%
.0 .2.4 .1 .5 .6 .3	Tower Assembly Stand	2	Each	BD	3	5	1	3%	4%	1%	30%
.0 .2.4 .1 .5 .6 .4	Personnel Platform	2	Each	BD	3	5	1	3%	4%	1%	30%
.0 .2.4 .1 .5 .7	Assembly equipment										
.0 .2.4 .1 .5 .7 .1	General Assembly Equipment	1	Each	BU	5	3	1	3%	3%	1%	25%
.0 .2.4 .1 .5 .7 .2	Clothing	1	Each	BD	2	5	1	3%	3%	1%	22%
.0 .2.4 .1 .5 .7 .3	Cleaning Supplies	1	Each	BD	2	5	1	3%	3%	1%	22%
.0 .2.4 .1 .5 .7 .4	Work Tables	1	Each	BD	2	5	1	3%	3%	1%	22%
.0 .2.4 .1 .5 .7 .5	Tools	1	Each	BD	4	5	1	3%	3%	1%	28%
.0 .2.4 .1 .5 .7 .6	Temporary Use Items	1	Each	BD	3	5	1	3%	3%	1%	25%
.0 .2.4 .1 .5 .7 .7	Handling Carts (10-50 T)	5	Each	BD	4	5	1	3%	3%	1%	28%

WBS	Item	No.	Units	Estimate Type	Risk factors Technic	Cost	Schedule	Risk percentages Tech	Cost	Schedule	Tot Cont Prec
.0 .2.4 .1 .0	Calibration Loops		Each	BD	7	5	1	6%	2%	1%	53%
.0 .2.4 .2	Module Assembly & Test										
.0 .2.4 .2 .1	Outer Structural Ring		MTons	PS	3	5	2	3%	3%	3%	30%
.0 .2.4 .2 .2	Inner Structural Ring		MTons	PS	3	5	2	3%	3%	3%	30%
.0 .2.4 .2 .3	Module Assembly		MTons								
.0 .2.4 .2 .3 .1	Station Seven										
.0 .2.4 .2 .3 .1 .1	Station Seven assy		MTons	PS	3	4	1	3%	3%	1%	22%
.0 .2.4 .2 .3 .1 .2	Module Assembly Stand		MTons	PS	3	4	1	3%	3%	1%	22%
.0 .2.4 .2 .3 .1 .3	Module Lifting Fixture		MTons	PS	4	5	1	3%	3%	1%	28%
.0 .2.4 .2 .4	Assembly Test										
.0 .2.4 .2 .4 .1	Station Eight										
.0 .2.4 .2 .4 .1 .1	Station Eight assy	1	Each	BU	4	5	1	3%	3%	1%	28%
.0 .2.4 .2 .4 .1 .2	Assembly Test Stand	2	Each	BD	3	5	1	3%	3%	1%	25%
.0 .2.4 .2 .4 .1 .3	Temporary Bracing	2	Each	BD	3	5	1	3%	3%	1%	25%
.0 .2.4 .2 .4 .1 .4	Temporary Wiring Harnesses	2	Each	BD	3	5	1	3%	3%	1%	25%
.0 .2.4 .2 .4 .1 .5	Op Test Sources / Counters	2	Each	BD	3	5	1	3%	3%	1%	25%
.0 .2.4 .2 .4 .1 .6	Personnel Platform	2	Each	BD	3	5	1	3%	4%	1%	30%
.0 .2.4 .3	Electronics										
.0 .2.4 .3 .1	Photomultiplier Tubes		Each	BU	3	4	3	4%	3%	3%	33%
.0 .2.4 .3 .2	Light Mixers		Each	BU	3	3	3	4%	3%	3%	30%
.0 .2.4 .3 .3	Electronic Readout		Each	PS	5	5	1	5%	2%	3%	38%
.0 .2.4 .4	Thermal Control										
.0 .2.4 .4 .1	Heat Transfer System	1	Each	SA	5	5	3	3%	4%	3%	44%
.0 .2.4 .4 .2	Heat Exchangers		Each	SA	5	5	3	3%	4%	3%	44%
.0 .2.4 .5	Beam Test/Calibration										
.0 .2.4 .5 .1	Test Stands		Each	BD	2	5	3	3%	4%	1%	29%
.0 .2.4 .5 .2	Manpower		Each	BD	2	4	4	2%	4%	3%	32%
.0 .2.4 .5 .3	Beam Calibration System		Each	BD	4	4	3	3%	4%	3%	37%
.0 .2.4 .6	Beam Test/Calibration										
.0 .2.4 .6 .1	Test Stands		Each	BD	4	5	3	3%	4%	3%	41%
.0 .2.4 .6 .2	Manpower		Each	BD	4	5	3	2%	4%	3%	37%
.0 .2.4 .6 .3	Beam Calibration System		Each	BD	5	5	3	3%	4%	3%	44%
.0 .2.4 .6 .3	Beam Calibration System		Each	BD	5	5	3	3%	4%	3%	44%
.0 .2.4 .7	FCAL Assembly Installation										
.0 .2.4 .7 .1	Manpower	1	Each	BD	3	3	5	4%	2%	2%	28%
.0 .2.4 .7 .2	Installation Equipment	1	Each		4	1	5	3%	2%	1%	18%
.0 .2.4 .7 .2 .1	Rails		Lbs	PS	5	3	2	3%	2%	1%	23%
.0 .2.4 .7 .2 .2	Transport Cart	1	Each	BD	5	3	1	3%	2%	1%	22%
.0 .2.4 .7 .2 .3	Temporary Bracing	1	Each	BD	5	3	1	3%	2%	1%	22%
.0 .2.4 .7 .2 .4	Crane	1	Each	BD	5	3	1	3%	2%	1%	22%
.0 .2.4 .8	Subsystem Management										
.0 .2.4 .8 .1	Project Management	1	Each	BU	5	1	4	6%	2%	1%	36%
.0 .2.4 .8 .2	Resource Management	1	Each	BD	5	1	4	6%	2%	1%	36%
.0 .2.4 .8 .3	ES&H	1	Each	BD	5	1	3	6%	2%	1%	35%
.0 .2.4 .8 .4	Quality Assurance	1	Each	BD	5	1	2	6%	2%	1%	34%
.0 .2.4 .8 .5	System Integration	1	Each	BD	5	1	5	6%	2%	1%	37%

WBS	Item	No.	Units	Estimate Type	Risk factors Technical	Cost	Schedule	Risk percentages Tech	Cost	Schedule	Tot Cost Prec
.1 .2.4 .0	Saint Liquid FCAL R&D										
.1 .2.4 .1	Material Tests										
.1 .2.4 .1 .1	Oil / Fiber Testing	1	Each	BD	5	3	2	6%	3%	3%	45%
.1 .2.4 .1 .2	Tungsten Eutectic Testing/Dev	1	Each	BD	5	3	2	6%	3%	3%	45%
.1 .2.4 .2	Single Tower Prototype										
.1 .2.4 .2 .1	Tower Assembly	1	Each	PS	5	3	2	6%	3%	3%	45%
.1 .2.4 .2 .2	Electronics	1	Each	PS	5	3	2	6%	3%	3%	45%
.1 .2.4 .2 .3	Assembly/Test Frame	1	Each	BD	5	3	2	6%	3%	3%	45%
.1 .2.4 .2 .4	Thermal Control	1	System	BD	5	3	2	6%	3%	3%	45%
.1 .2.4 .3	36 Tower Prototype										
.1 .2.4 .3 .1	Tower Assembly	9	Each	PS	5	3	2	6%	3%	3%	45%
.1 .2.4 .3 .2	Electronics	9	Each	PS	5	3	2	6%	3%	3%	45%
.1 .2.4 .3 .3	Assembly/Test Frame	1	Each	BD	5	3	2	6%	3%	3%	45%
.1 .2.4 .3 .4	Thermal Control	1	System	BD	5	3	2	6%	3%	3%	45%
.1 .2.4 .3 .5	Beam Testing	1	System	BD	5	3	2	6%	3%	3%	45%
.1 .2.4 .4	Manufacturing Development										
.1 .2.4 .4 .1	Tube Cutting	1	System	BD	5	3	2	6%	3%	3%	45%
.1 .2.4 .4 .2	Readout Assembly	1	System	BD	5	3	2	6%	3%	3%	45%
.1 .2.4 .4 .3	Casting	1	System	BD	5	3	2	6%	3%	3%	45%
.1 .2.4 .4 .4	Tower Handling	1	System	BD	5	3	2	6%	3%	3%	45%
.2 .2.4 .0	Sol Liq FCAL Concep/Pre Design										
.2 .2.4 .1	Preparation of LoI										
.2 .2.4 .1 .1	Conceptual Design			BD							0%
.2 .2.4 .1 .2	Costing Studies			BD							0%
.2 .2.4 .1 .3	Document Preparation			BD							0%
.2 .2.4 .2	Prep of Tech Prop.										
.2 .2.4 .2 .1	Conceptual Design			BD							0%
.2 .2.4 .2 .2	Costing Studies			BD							0%
.2 .2.4 .2 .3	Manufacturing Studies			BD							0%
.2 .2.4 .2 .4	Installation Studies			BD							0%
.2 .2.4 .2 .5	Prep of Tech Prop			BD							0%

1.2 MATERIAL COST

Spaghetti Forward Calorimeter Materials

(for two FCAL = 240 supertowers)

TOTAL:	$4,379,971

Cost of Sheaths

Material	Quantity	Units	Cost/Unit	
Sheetmetal	11,464	Lbs	$5.50	$63,052
Fasteners	3,840	Each	$5.00	$19,200
Total				$82,252

Cost of 3 mm SS Tubes (1/8" OD w/ 0.006 " w.t.)

Material	Quantity	Units	Cost/Unit	
SS Tubing	633,284	FT	$0.85	$538,292
Tube Coating	633,284	FT	$1.00	$633,284
Total				$1,171,576

Cost of Support Structure & outer ring

Material	Quantity	Units	Cost/Unit	
Outer Ring	16,314	Lbs	$6.60	$107,673
Support Structure	25,573	Lbs	$6.60	$168,784
Fasteners	128	Each	$10.00	$1,280
Total				$277,737

Cost of Top Plates & Oil Supply System

Material	Quantity	Units	Unit Cost	Cost
4 Plates/S. Tower	2,346	Lbs	$12.00	$28,154
Spacer Plates	647	Lbs	$4.00	$2,586
Oil Supply Piping	1,360	Lbs	$5.50	$7,481
Oil Pump	2	Each	$20,000.00	$40,000
Total				$78,221

Cost of Absorber

Material	Quantity	Units	Cost/Unit	
Tungsten	116,182	Lbs	$13.00	$1,510,371
Wood's Metal	57,099	Lbs	$2.54	$144,824
Total				$1,655,196

Cost of Readout Assemblies

Material	Quantity	Units	Cost/Unit	
Readout Fiber	105,403	Ft	$0.53	$55,579
PMT	1,664	Each	$600.00	$998,400
Wood's Metal	4,619	Lbs	$2.54	$11,731
Light Mixers	1,664	Each	$25.00	$41,600
Fastener	7,680	Each	$1.00	$7,680
Total				$1,114,991

1.3 MANUFACTURING PROCESS FLOW DIAGRAM

Scintillating Forward Calorimeter Manufacturing Process

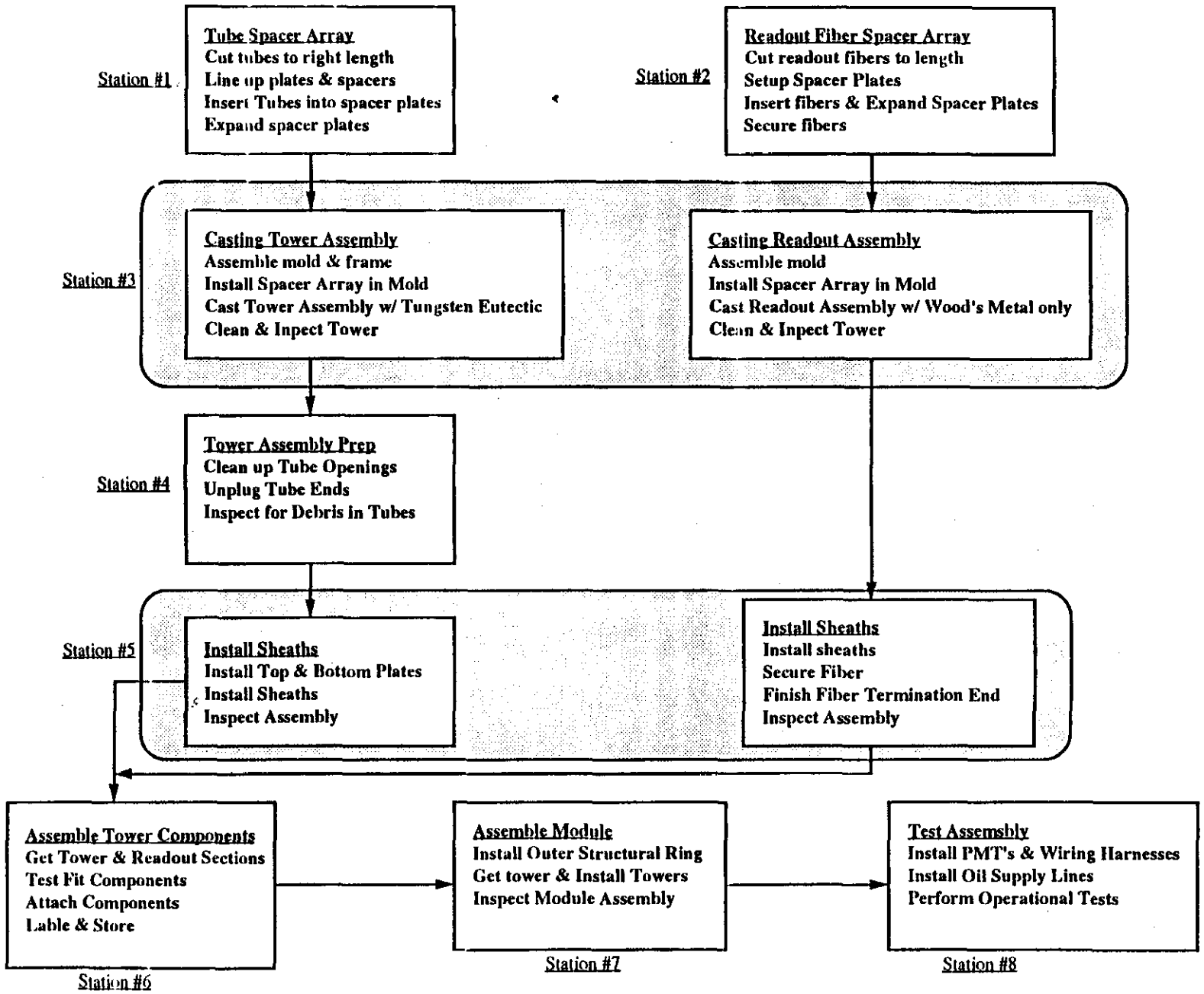

1.4 MANUFACTURING EQUIPMENT COST

Manufacturing Equipment for Spaghetti Forward Calorimeter

	Equipment	Quantity	Unit Cost	Total Cost
	STATION ONE			
1.01	3 mm Tube Cutting Machine	1	$20K	$20K
1.02	Spacer Alignment Fixture	1	$5K	$5K
1.03	Spacer Expansion Fixture	1	$5K	$5K
	STATION TWO			
2.01	Readout Fiber Cutting Machine	1	$25K	$25K
2.02	Spacer Alignment Fixture	1	$1K	$1K
	STATION THREE			
3.01	Large Casting System	1	$125K	$125K
3.02	Tower Molds	6	$8K	$48K
3.03	Readout Section Molds	6	$3K	$18K
3.04	Setup Stand	1	$15K	$15K
3.05	Personnel Platforms	2	$4K	$8K
	STATION FOUR			
4.01	Setup Stand	1	$10K	$10K
4.02	Personel Platform	1	$4K	$4K
	STATION FIVE			
5.01	Sheath Assembly Stand (Tower)	1	$10K	$10K
5.02	Sheath Assembly Stand (Readout)	1	$3K	$3K
5.02	Personnel Platform	2	$2K	$4K
	STATION SIX			
6.01	Tower Fixture	1	$10K	$10K
6.02	Tower Assembly Stand	1	$15K	$15K
6.03	Personnel Platform	2	$4K	$8K
	STATION SEVEN			
7.01	Module Assembly Stand	1	$35K	$35K
7.02	Module Lifting Fixture	1	$45K	$45K
	STATION EIGHT			
8.01	Assembly Test Stand	1	$25K	$25K
8.02	Temporary Bracing	1	$15K	$15K
8.03	Temporary Wiring Harnesses	1	$10K	$10K
8.04	Op Test Sources / Counters	1	$5K	$5K
8.05	Personnel Platform	2	$4K	$8K
	GENERAL EQUIPMENT			
10.01	Clothing	1	$10K	$10K
10.02	Cleaning Supplies	1	$5K	$5K
10.03	Work Tables	4	$3K	$12K
10.04	Tools	1	$10K	$10K
10.05	Temporary Use Items	1	$20K	$20K
10.06	Handling Carts (10 to 50 T)	2	$5K	$10K
	Total			$544K

S. M. Chae/ORNL/4-14-92

1.5 MANUFACTURING LABOR COST

Spaghetti Forward Calorimeter

(Tungsten Eutectic)

Tube & Readout Fiber Size: 3 mm

	STATION ONE					
1.00	TUbe Spacer Arrays					
Task Number	Task Descript.	Hours	Personload	Unit Tot PHRS	Quantity	Tot. PHRS
1.01	Retrieve Spacer plates	0.25	1	0.25	240	60
1.03	Clean Spacer Plates	0.25	1	0.25	240	60
1.04	Assemble Spacer Plate Stack & Inspect	0.17	1	0.17	240	40
1.06	Install Rack in Tube Install. Station	0.17	1	0.17	240	40
1.07	Get Tubes	0.50	1	0.50	240	120
1.08	Cut and Inspect Tubes	0.01	1	0.01	128508	1606
1.09	Install Tubes in Rack & Close Tube Ends	0.02	1	0.02	128508	2142
1.10	Expand Spacer Array	0.25	2	0.50	240	120
1.11	Install Spacer Bars	0.25	2	0.50	240	120
1.12	Inspect Completed Assembly	0.25	1	0.25	240	60
1.13	Move assembly to Storage/STA 3	0.25	2	0.50	240	120
	Totals for Station One	2.36		3.11		4488
	Personnel Efficiency					1.25
	Estimated Personhours					5610
	Person Years@1770 Hr/Yr					3.17

	STATION TWO					
2.00	Readout Section Spacer Array					
Task Number	Task Descript.	Hours	Personload	Unit Tot PHRS	Quantity	Tot. PHRS
2.01	Get Readout Fibers	0.25	1	0.25	240	60
2.02	Get Spacer Plates & Assemble Stack	0.25	1	0.25	240	60
2.03	Cut and Inspect Fibers	2.00	1	2.00	240	480
2.04	Insert Fibers in Spacer Plates	0.01	1	0.01	128508	714
2.05	Expand Spacer Plates & Insert Spacer Bars	0.17	1	0.17	240	40
2.06	Secure Fibers	0.25	1	0.25	240	60
2.11	Inspect Completed Assembly	0.08	1	0.08	240	20
2.12	Move Assembly to Station 3/Storage	0.25	1	0.25	240	60
	Totals for Station Two	3.26		3.26		1494
	Personnel Efficiency					1.25
	Estimated Personhours					1867
	Person Years@1770 Hr/Yr					1.06

STATION THREE

3.00 Cast Tower & Readout Assemblies

Task Number	Task Descript.	Hours	Personload	Unit Tot PHRS	Quantity	Tot. PHRS
3.01	Get Spacer Array from Storage (Tower)	0.25	2	0.50	240	120
3.02	Inspect Spacer Array (Tower)	0.08	1	0.08	240	20
3.03	Assemble Mold and Frame (Tower)	4.00	2	8.00	6	48
3.04	Install Spacer Array in Mold (Tower)	0.17	2	0.33	240	80
3.05	Install Mold in Casting Station(Tower)	1.00	2	2.00	240	480
3.06	Heat Molding Bath (Tower)	2.00	0.1	0.20	240	48
3.07	Place Metal in Crucible(Tower)	0.25	1	0.25	240	60
3.08	Perform PreCasting Inspections(Tower)	0.17	1	0.17	240	40
3.09	Cast Tower Assemblies (Tower)	1.00	2	2.00	240	480
3.10	Remove Mold From Casting Station(Tower)	0.50	2	1.00	240	240
3.11	Supervise Mold Cool-Down Cycle(Tower)	8.00	0.05	0.40	240	96
3.12	Open Mold(Tower)	1.00	2	2.00	240	480
3.13	Clean Tower Assembly(Tower)	0.50	1	0.50	240	120
3.14	Inspect Tower Assembly	0.17	1	0.17	240	40
3.15	Move Tower assembly to Station 4	0.25	2	0.50	240	120
3.16	Get Spacer Array from Storage(Readout)	0.17	1	0.17	240	40
3.17	Inspect Spacer Array(Readout)	0.02	1	0.02	240	4
3.18	Assemble Readout Mold (Readout)	1.00	1	1.00	6	6
3.19	Install Spacer Array in Mold (Readout)	0.08	1	0.08	240	20
3.20	Install Mold in Casting Station(Readout)	0.17	1	0.17	240	40
3.21	Heat Molding Bath (Readout)	0.50	0.1	0.05	240	12
3.22	Place Metal in Crucible(Readout)	0.08	1	0.08	240	20
3.23	Perform PreCasting Inspections(Readout)	0.08	1	0.08	240	20
3.24	Cast Readout Assemblies	0.50	1	0.50	240	120
3.25	Remove Readout Mold From Casting Station	0.25	1	0.25	240	60
3.26	Supervise Readout Mold Cool-Down Cycle	3.00	0.05	0.15	240	36
3.27	Open Readout Mold	0.25	1	0.25	240	60
3.28	Clean Readout Assembly	0.25	1	0.25	240	60
3.29	Inspect Readout Assembly	0.04	1	0.04	240	10
3.30	Move Readout Assembly to Station 5	0.08	1	0.08	240	20
	Totals for Station Three	25.81		21.28		3000
	Personnel Efficiency					1.25
	Estimated Personhours					3750
	Person Years@1770 Hr/Yr					2.12

STATION FOUR

4.00 Tower Assembly Prep

Task Number	Task Descript.	Hours	Personload	Unit Tot PHRS	Quantity	Tot. PHRS
4.01	Retrieve & Inspect Tower Assembly	0.25	2	0.50	240	120
4.02	Clean Tower Assembly @ Tube Ends	2.00	1	2.00	240	480
4.03	Pull Out All Plugs From Tube Ends	0.01	1	0.01	128508	714
4.04	Inspect Tubes (Openings & Inside)	0.00	1	0.00	128508	357
4.05	Move subassembly to Storage/Sta 5	0.50	2	1.00	240	240
	Totals for Station Four	2.76		3.51		1911
	Personnel Efficiency					1.25
	Estimated Personhours					2389
	Person Years@1770 Hr/Yr					1.35

	STATION FIVE					
5.00	Assemble Sheaths					
Task Number	Task Descript.	Hours	Personload	Unit Tot PHRS	Quantity	Tot. PHRS
5.01	Retrieve Tower Sheaths	0.33	1	0.33	240	80
5.02	Clean & Inspect Sheaths	0.25	1	0.25	240	60
5.03	Get Tower Assembly & Inspect	0.50	2	1.00	240	240
5.04	Install (Braze) Sheaths on Tower Assembly	57.74	1	57.74	240	13858
5.08	Inspect Tower Subassembly	0.25	1	0.25	240	60
5.09	Move Subassembly to Storage/Sta 6	0.50	1	0.50	240	120
5.09	Retrieve Readout Sheaths & Clean	0.17	1	0.17	240	40
5.09	Get Readout Assembly & Inspect	0.17	1	0.17	240	40
5.09	Install (Braze) Sheaths on Readout Assembly	4.72	1	4.72	240	1134
5.09	Inspect Readout Subassembly	0.25	1	0.25	240	60
5.09	Move Subassembly to Storage/Sta 6	0.17	1	0.17	240	40
	Totals for Station Five	65.05		65.55		15732
	Personnel Efficiency					1.25
	Estimated Personhours					19665
	Person Years@1770 Hr/Yr					11.11

	STATION SIX					
6.00	Assemble Tower Components					
Task Number	Task Descript.	Hours	Personload	Unit Tot PHRS	Quantity	Tot. PHRS
6.01	Adjust Tower Assembly Stand	0.50	1	0.50	6	3
6.02	Inspect Tower Assembly Stand	0.08	1	0.08	6	1
6.03	Transport Tower Assembly	0.50	2	1.00	240	240
6.04	Transport Readout Section	0.08	1	0.08	240	20
6.05	Test Fit components	0.50	1	0.50	240	120
6.06	Attach Components (Some Brazing)	5.00	1	5.00	240	1200
6.07	Inspect Tower Subassembly	0.25	1	0.25	240	60
6.08	Label and Store Subassembly	0.50	2	1.00	240	240
	Total for Station Six	7.42		8.42		1884
	Personnel Efficiency					1.25
	Estimated Personhours					2354
	Person Years@1770 Hr/Yr					1.33

Tower Fabrication Personhours Subtotal					35636
Person Years@1770 Hr/Yr					20.13

STATION SEVEN

7.00 Assemble Modules

Task Number	Task Descript.	Hours	Personload	Unit Tot PHRS	Quantity	Tot. PHRS
7.01	Assemble Conical Fixture & Inspect	4.00	2	8.00	1	8
7.02	Locate, Transport and Inspect Ring	1.00	2	2.00	2	4
7.03	Install Outer Structural Ring	2.00	2	4.00	3	12
7.04	Locate and Transport Tower Asemblies	0.50	2	1.00	240	240
7.05	Install Tower Assemblies	1.00	2	2.00	240	480
7.06	Inspect Module Assembly	0.50	2	1.00	2	2
7.07	Label and Store Ring	2.00	3	6.00	2	12
	Total for Station Seven	11.00		24.00		758
	Personnel Efficiency					1.25
	Estimated Personhours					948
	Person Years@1770 Hr/Yr					0.54

STATION EIGHT

8.00 Test Assemblies @ Texas

Task Number	Task Descript.	Hours	Personload	Unit Tot PHRS	Quantity	Tot. PHRS
8.01	Move Module Assembly to Test Station	2.00	3	6.00	2	12
8.02	Install PMT's	1.00	1	1.00	240	240
8.03	Install Oil Supply System	40.00	3	120.00	2	240
8.04	Install Test Harnesses	0.50	2	1.00	240	240
8.05	Start up Test Apparatus	2.00	2	4.00	2	8
8.06	Perform Operational Tests	80.00	2	160.00	2	320
8.07	Return Assemblies to Storage/Sta 9	2.00	3	6.00	2	12
	Total for Station Eight	127.50		298.00		1072
	Personnel Efficiency					1.25
	Estimated Personhours					1340
	Person Years@1770 Hr/Yr					0.76

Module Assembly Subsubtotal (@ Texas)	2288
Person Years@1770 Hr/Yr	1.29

Total Fabrication Personhours	37923
Person Years@1770 Hr/Yr	21.43

1.6 INSTALLATION COST (LABOR & EQUIPMENT)

Spaghetti Forward Calorimeter Installation

Total:	$181,825

Installation Equipment-Spaghetti Forward Calorimeter

Equipment	Quantity	Weight	Units	Unit Cost		Cost
Transport Cart	1	1	Unit	$40,000.00		$40,000
Temporary Bracing	1	20000	Lbs	$2.00		$40,000
Temporary Rail	1	15000	Lbs	$2.00		$30,000
Crane	1	1	Unit	$25,000.00		$25,000
Total						$135,000

Installation Manpower-Spaghetti Forward Calorimeter

Personnel	No.	Duration Months	Service Time MH/Month	Total Hours	Hourly Rate	Cost
Electrician	3	2	170	1020	$29.86	$30,457
Crane Operator	1	2	170	340	$26.64	$9,058
Pipe Fitter	2	1	170	340	$21.50	$7,310
Total	6			1700	$78.00	$46,825
Person Years				0.83		
Yearly Rate				$56.19K		

2.1 PARAMETER TABLE

GEM Parameters

Spaghetti Forward Calorimeter

Tungsten / Eutectic (50.0%)

	One Side	Both Sides	
Mechanical Towers	120	240	units
Channels	832	1,664	units
Sheeth Volume	0.3	0.7	M^3
Tube Volume	0.1	0.3	M^3
Oil Volume	0.6	1.1	M^3
Absorber Volume	2.7	5.5	M^3
Tungsten Volume	1.4	2.7	M^3
Eutectic Volume	1.4	2.7	M^3
Volume of End (spacer) Plates	0.1	0.1	M^3
Oil Supply System Volume (oil Included)	0.1	0.1	M^3
TOTAL VOLUME	3.9	7.8	M^3
Total Weight of 6 Modules	44.0	88.0	Metric Tons
Tunsten	26.3	52.7	Metric Tons
Eutectic	13.0	25.9	Metric Tons
Sheaths	2.6	5.2	Metric Tons
Tube Weight	1.1	2.1	Metric Tons
Structural Components	4.9	9.8	Metric Tons
Outer Ring	3.7	7.4	Metric Tons
Oil Supply System (weight of oil included)	0.3	0.6	Metric Tons
TOTAL WEIGHT (per side)	52.9	105.8	Metric Tons
Active Absorption Lenghth	12.0		Lambda
Eta Coverage	$3 < \eta < 5$		Lambda
Lenght of 3mm Tubes	96,512	193,025	Meters
Number of 3 mm Tubes	64,254	128,508	units
Inner Radius	25		mm
Outer Radius	945		mm
Active Length	1,821		mm
Total Length	~2200		mm

2.2 GENERAL ARRANGEMENT & DETAIL DRAWINGS

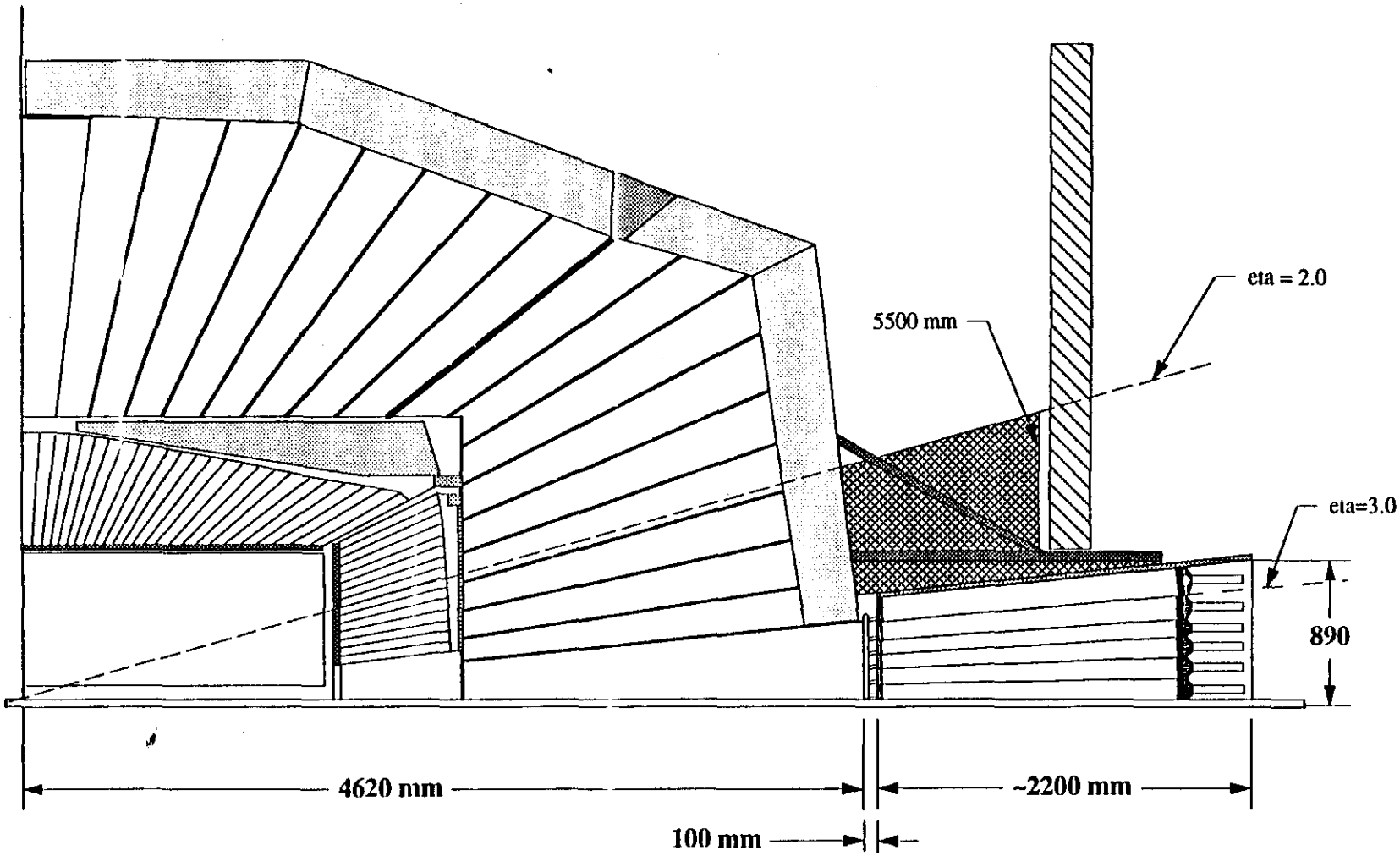

GEM Detector
Forward Calorimeter
General Arrangement

FCAL LOCATION

Rennich/Chae

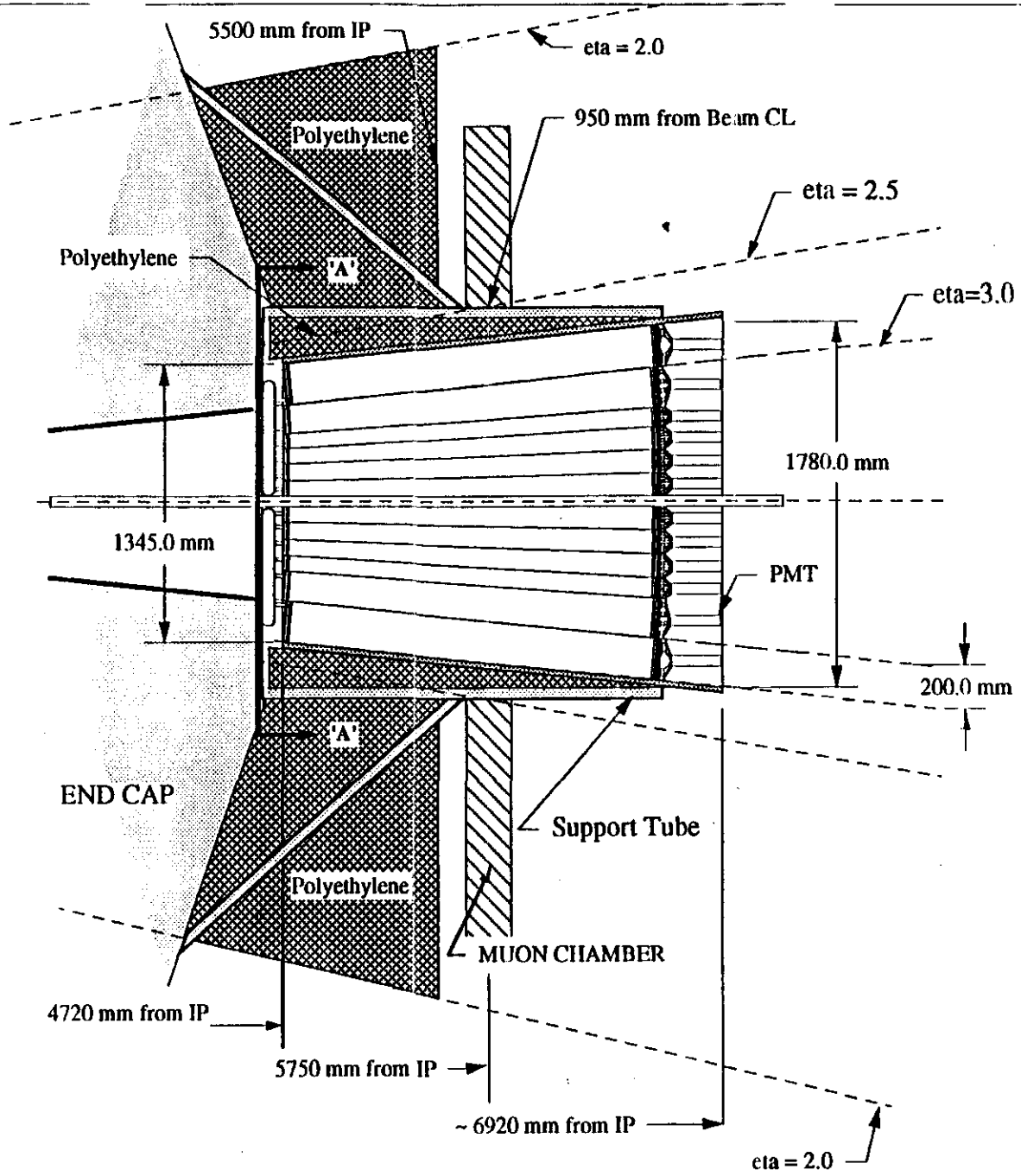

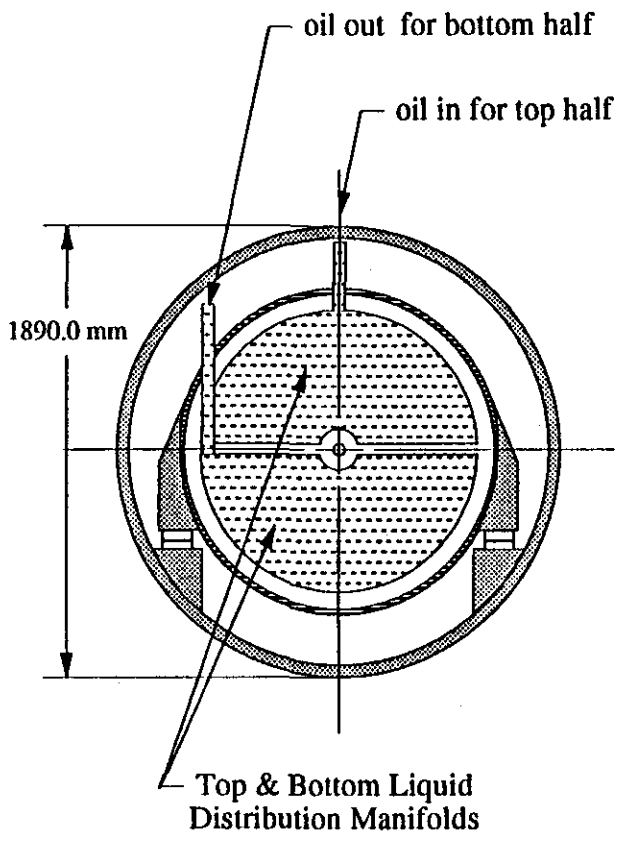

VIEW "A-A"

NOTE:
1. OIL PIPING SYSTEM IS NOT SHOWN.

MARTIN MARIETTA ENERGY SYSTEMS	
PROJECT: SSC GEM DETECTOR	
FORWARD CALORIMETER LIQUID SCINTILLATING OPTION SPAGHETTI FCAL LAYOUT CONCEPT	
PRINT NO: D-FCLS-MD001	REV 3
DRAWN BY: S. M. CHAE	3/31/92
CHECKED & APPROVED BY:	

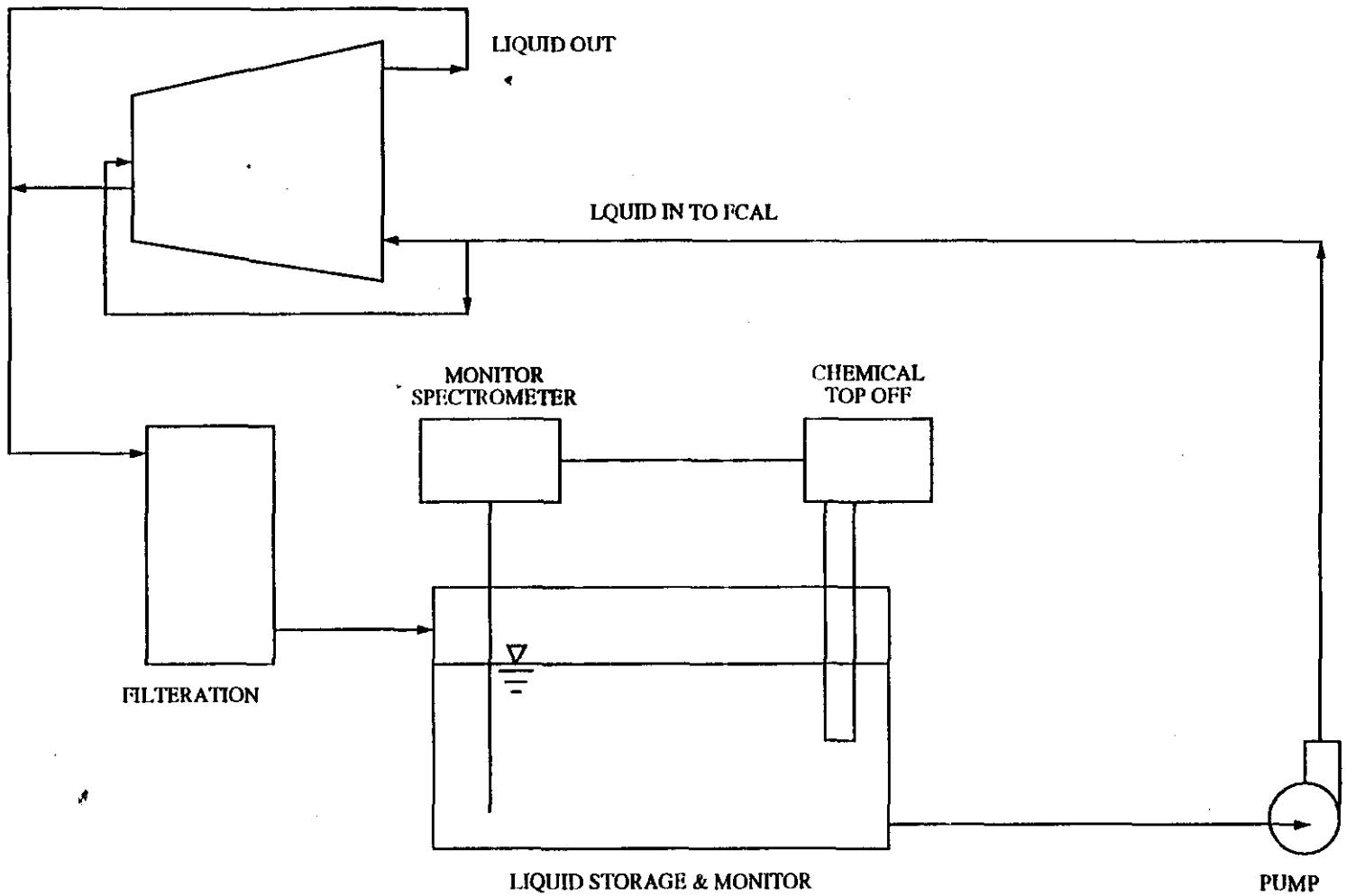

GEM
Spaghetti Forward Calorimeter
Oil Purification System Diagram

Chae

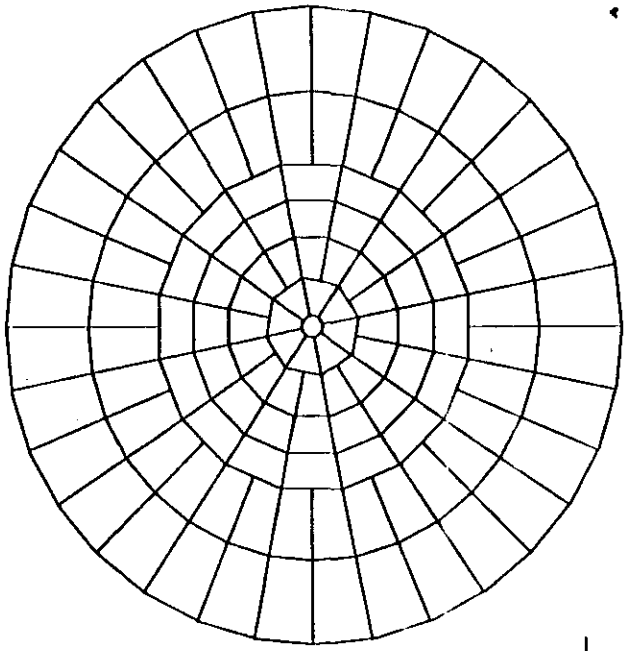

INNER FACE
@ 4720 mm FROM IP

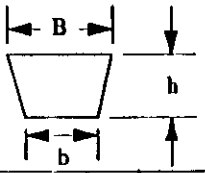

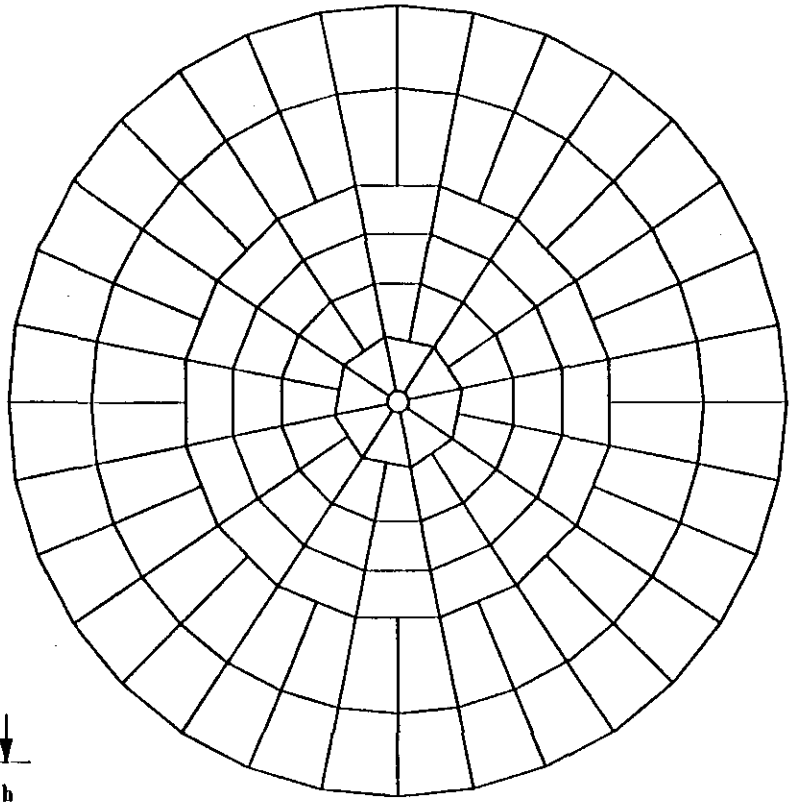

OUTER FACE
@ 6582 mm FROM IP

Module Number	@ 4720 mm from IP		@ 6582 mm from IP		@ 4720 mm from IP			@ 6582 mm from IP		
	Eta	Radius mm	Eta	Radius mm	B mm	h mm	b mm	B mm	h mm	b mm
6	6.378	25.00	6.378	25.00	77.85	69.07	19.13	108.57	105.42	19.13
5	4.550	99.77	4.550	139.13	70.95	80.45	38.93	98.93	112.17	54.28
4	3.950	181.83	3.950	253.55	100.72	74.75	70.95	140.47	104.19	98.93
3	3.600	258.13	3.600	360.02	130.01	71.96	100.72	181.32	100.27	140.47
2	3.350	331.60	3.350	462.32	92.36	138.38	65.01	128.80	192.75	90.66
1	3.000	471.16	3.000	657.03	131.57	199.01	92.36	168.01	199.01	128.80
OD	2.649	671.16	2.740	857.03						

MARTIN MARIETTA ENERGY SYSTEMS

PROJECT: SSC GEM DETECTOR

FORWARD CALORIMETER
LIQUID SCINTILLATING OPTION
SPAGHETTI TOWER & MODULE DESIGN .

PRINT NO: D-FCLS-TAMD001 | REV 6

DRAWN BY: S. M. CHAE | 3/31/92

CHECKED & APPROVED BY:

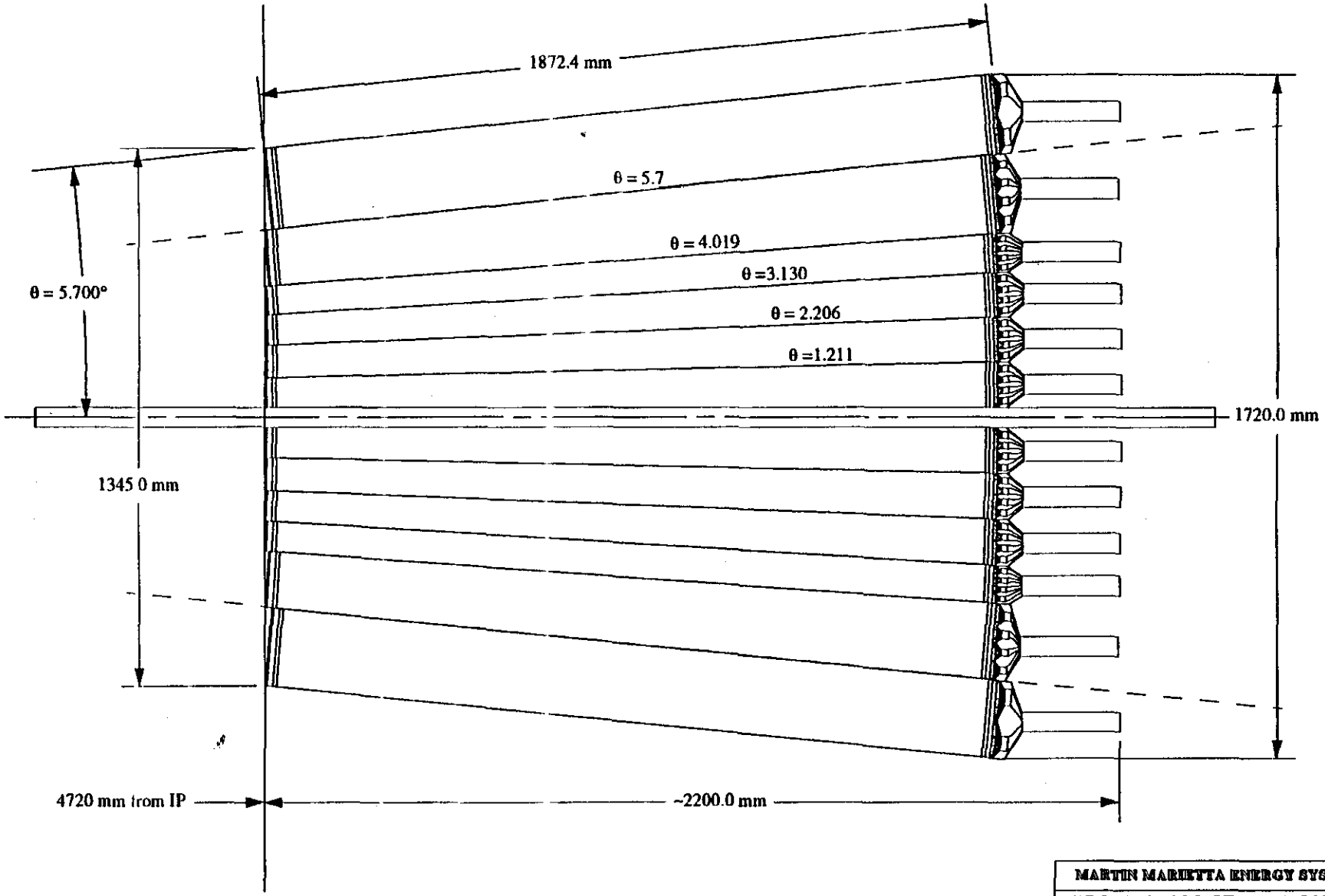

Notes:

1. PMT's shown are not drawn to scale.

MARTIN MARIETTA ENERGY SYSTEMS	
PROJECT: SSC GEM DETECTOR	
FORWARD CALORIMETER LIQUID SCINTILLATING OPTION SPAGHETTI TOWER & MODULE DESIGN SUPER TOWER ARRANGEMENT	
PRINT NO: D-FCLS-TAMD002	REV 3
DRAWN BY: S. M. CHAE	3/31/92
CHECKED & APPROVED BY:	

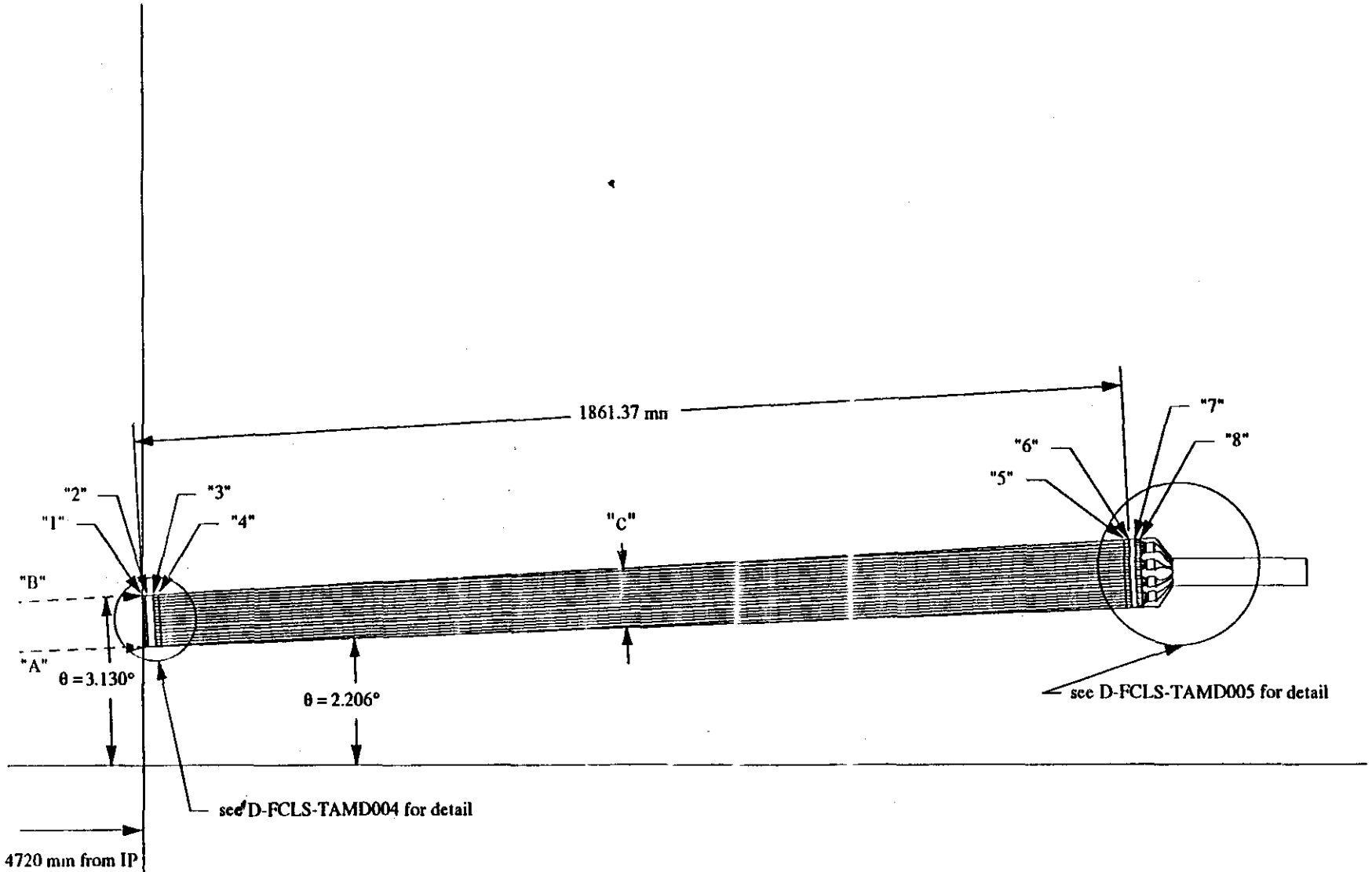

	1	2	3	4	5	6	7	8
RA	181.90	182.09	182.67	183.06	253.17	253.55	253.59	253.98
RB	258.03	258.30	259.12	259.67	359.13	359.67	359.73	360.28
**Length A	4725.28	4730.28	4745.28	4755.28	6576.65	6586.65	6587.65	6597.65
**Length B	4725.28	4730.28	4745.28	4755.28	6576.65	6586.65	6587.65	6597.65
Length C	74.75	74.83	75.07	75.22	104.04	104.19	104.21	104.37

** The lengths in the table indicate the distance from the interaction point.

MARTIN MARIETTA ENERGY SYSTEMS

PROJECT: SSC GEM DETECTOR

FORWARD CALORIMETER
LIQUID SCINTILLATING OPTION
SPAGHETTI TOWER & MODULE DESIGN
SUPER TOWER OF MODULE 4

PRINT NO: D-FCLS-TAMD003 | REV 2

DRAWN BY: S. M. CHAE | 3/24/92

CHECKED & APPROVED BY:

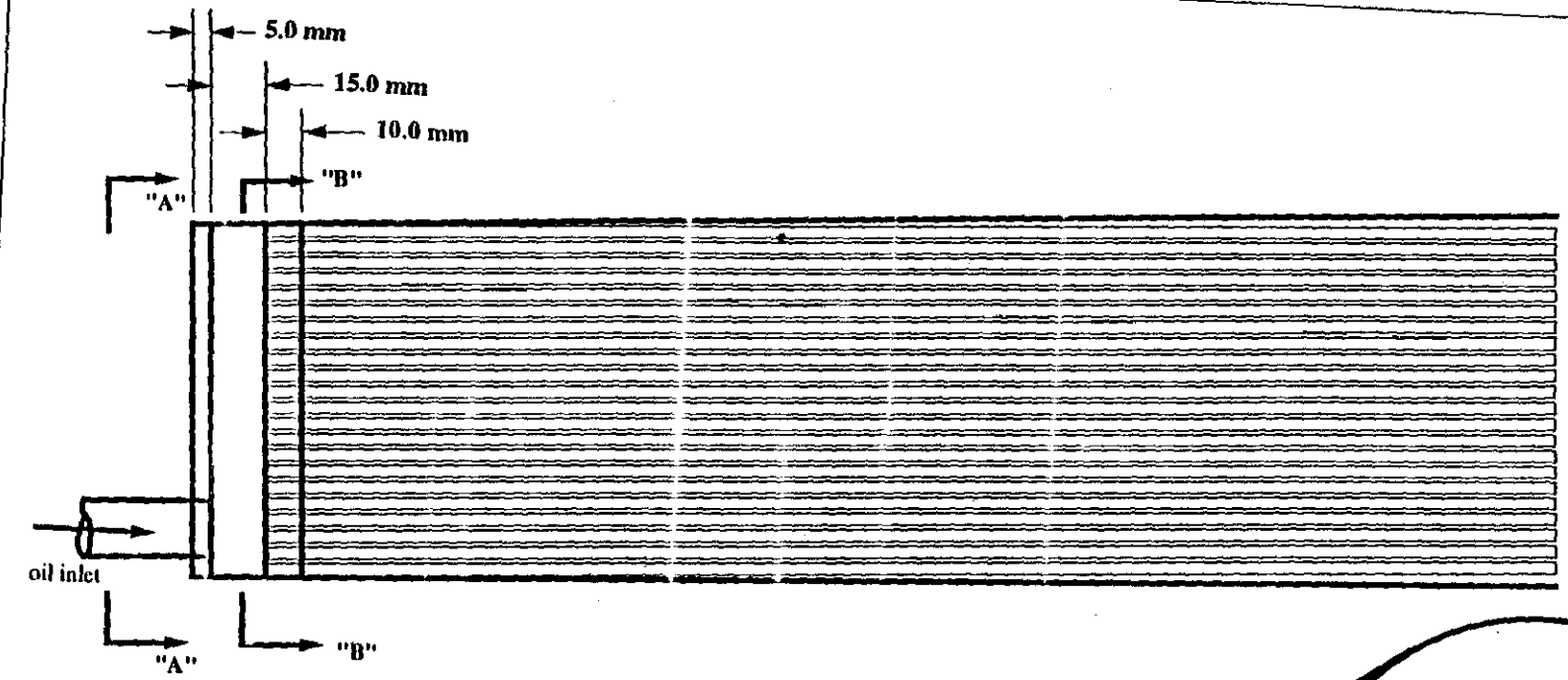

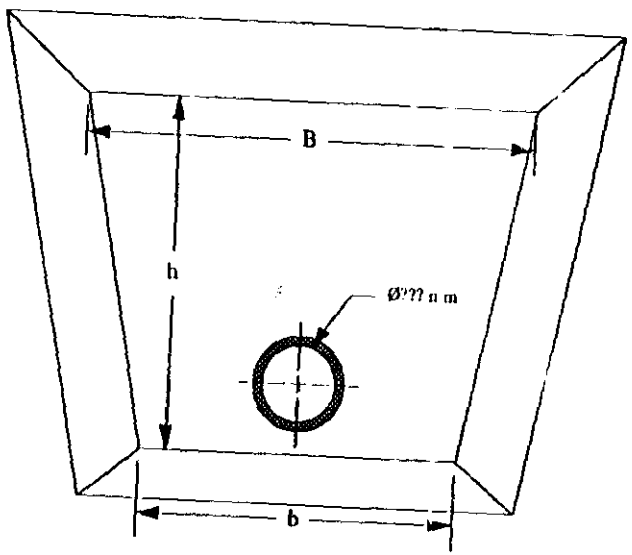

VIEW "A-A"

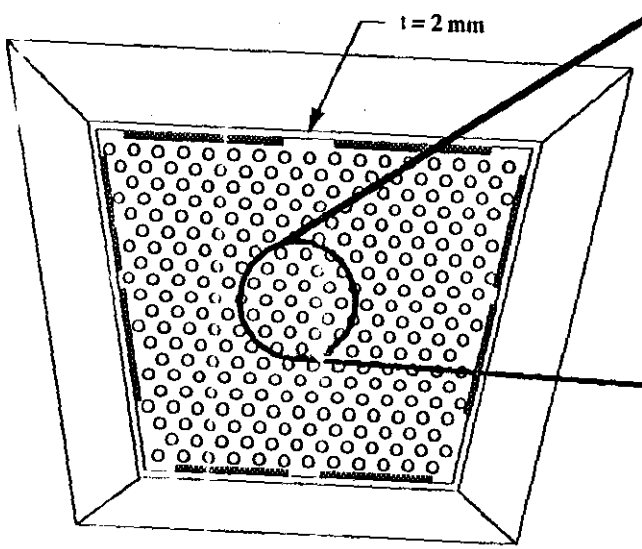

VIEW "B-B"

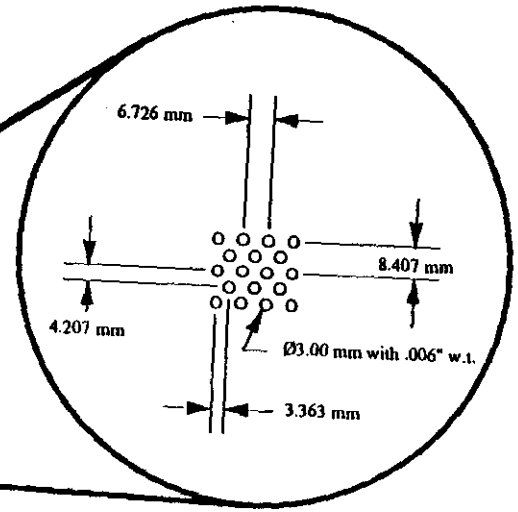

TUBE ARRANGEMENT DETAIL

Note: 1. See DFCLSTAMD001 for dimensions B, b, and h.

MARTIN MARIETTA ENERGY SYSTEMS	
PROJECT: SSC GEM DETECTOR	
FORWARD CALORIMETER LIQUID SCINTILLATING OPTION SUPER TOWER INNER END FACE DETAIL	
PRINT NO: D-FCLS-TAMD004	REV 1
DRAWN BY: S. M. CHAE	3/3/92
CHECKED & APPROVED BY:	

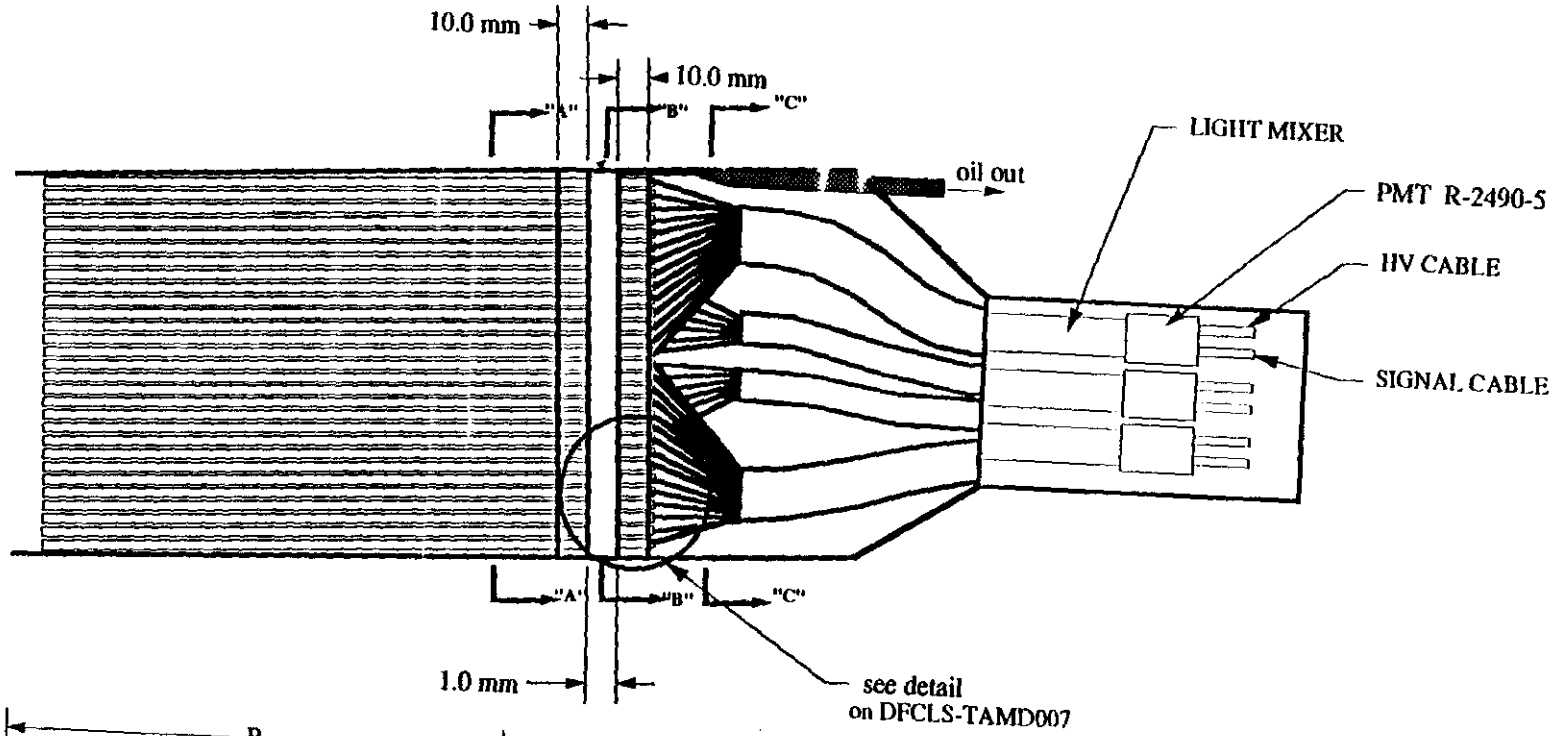

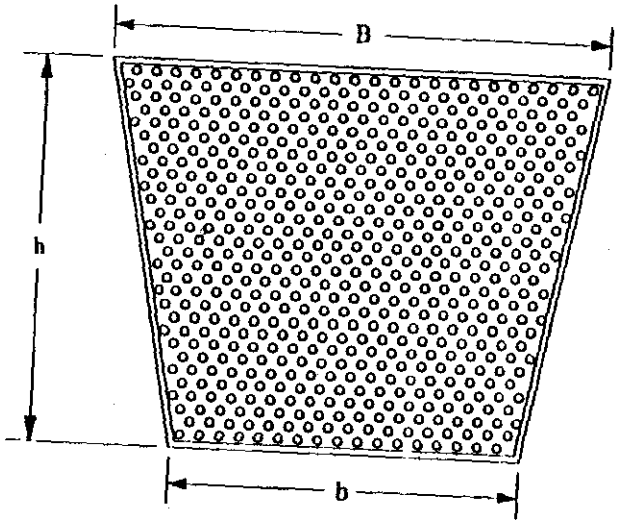

VIEW "A-A" & "B-B"

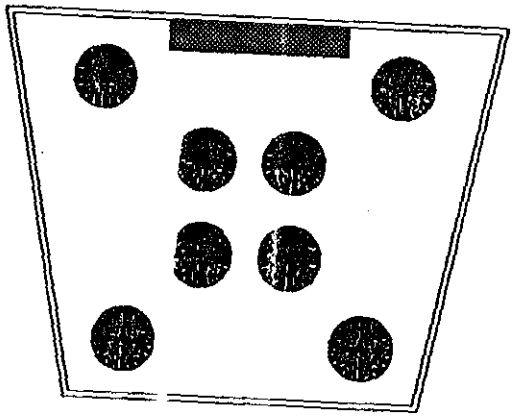

VIEW "C-C"

Note: 1. See DFCLSTAMD001 for dimensions B, b, and h.

MARTIN MARIETTA ENERGY SYSTEMS	
PROJECT: SSC GEM DETECTOR	
FORWARD CALORIMETER LIQUID SCINTILLATING OPTION SUPER TOWER OUTER END FACE DETAIL	
PRINT NO: D-FCLS-TAMD005	REV 2
DRAWN BY: S. M. CHAE	4/16/92
CHECKED & APPROVED BY:	

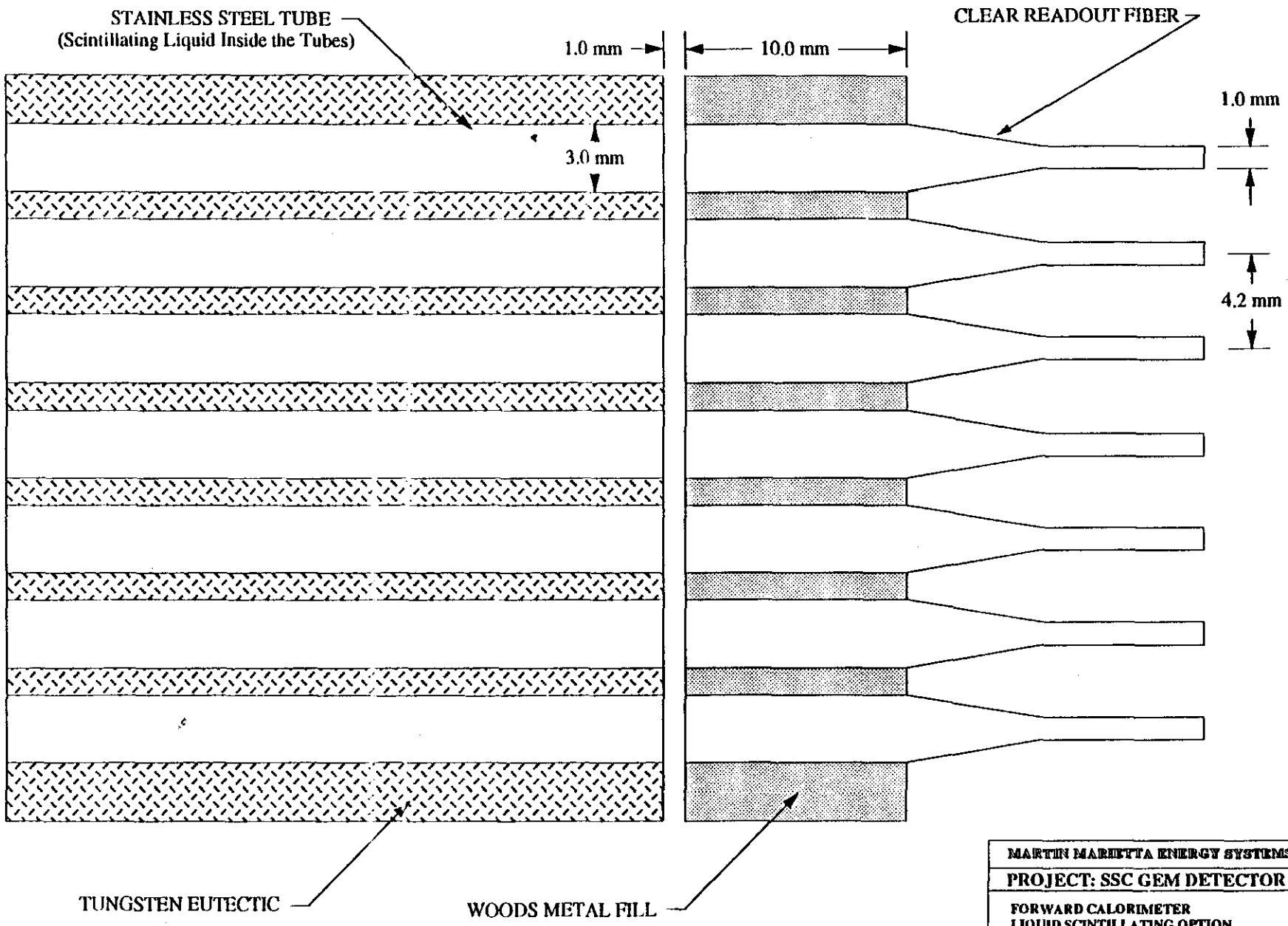

MARTIN MARIETTA ENERGY SYSTEMS	
PROJECT: SSC GEM DETECTOR	
FORWARD CALORIMETER LIQUID SCINTILLATING OPTION TUBE & READOUT FIBER ARRANGEMENT	
PRINT NO: D-FCLS-TAMD007	REV 0
DRAWN BY: S. M. CHAE	4/16/92
CHECKED & APPROVED BY:	

3.1 TOWER SIZE CALCULATION

MECHANICAL TOWER SIZE CALCULATIONS

MECHANICAL TOWER SIZE CALCULATION, INNER FACE

Distance From IP mm	Eta	Theta degree	Radius mm
4720	2.64	8.144	675.46

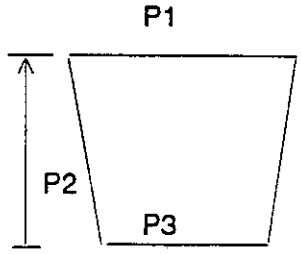

Delta Eta= 2.4966

Module Number	No of Towers	Eta	Theta degree	Radius mm	Circumfer. mm	Lengths P1 mm	P2 mm	P3 mm
6	8	5.934	0.303	25.00	157.05	77.85	69.07	19.1312
		5.10	0.699	57.56	361.63			
5	16	4.55	1.211	99.77	626.85	70.95	80.45	38.9266
		4.20	1.718	141.59	889.64			
4	16	3.95	2.206	181.83	1142.48	100.72	74.75	70.9472
		3.75	2.694	222.13	1395.69			
3	16	3.60	3.130	258.13	1621.87	130.01	71.96	100.717
		3.45	3.637	299.98	1884.84			
2	32	3.35	4.019	331.60	2083.53	92.36	138.38	65.0058
		3.20	4.668	385.44	2421.76			
1	32	3.00	5.700	471.16	2960.37	131.57	199.01	92.3631
		3.00	5.700	471.16	2960.37			
0	32	2.649	8.093	671.16	4217.00	0.00	-666.27	131.57
	32						0.00	0
	32							0

MECHANICAL TOWER SIZE CALCULATION, OUTER FACE

(PARAMETERS SHOWN ARE AT THE OIL GAP)

Distance From IP mm	Eta	Theta degree	Radius mm
6581.21	2.73	7.444	859.9

The super tower length is based on 12 lamda (15.18 cm / lamda) of absorption depth for the 50% tungsten eutactic absorber material.

Module Number	No of Towers	Eta	Theta degree	Radius mm	Circumfer. mm	Lengths P1 mm	P2 mm	P3 mm
6	8	6.266	0.218	25.00	157.05	108.57	105.42	19.1312
		5.10	0.699	80.25	504.23			
5	16	4.55	1.211	139.13	874.15	98.93	112.17	54.2843
		4.20	1.718	197.42	1240.44			
4	16	3.95	2.206	253.55	1593.13	140.47	104.19	98.9318
		3.75	2.694	309.72	1946.04			
3	16	3.60	3.130	360.02	2262.09	181.32	100.27	140.474
		3.45	3.637	418.27	2628.07			
2	32	3.35	4.019	462.47	2905.77	128.80	192.75	90.6596
		3.20	4.668	537.42	3376.72			
1	32	3.00	5.700	657.03	4128.24	168.01	199.01	123.301
		3.00	5.700	657.03	4128.24			
0	32	2.74	7.420	857.03	5384.88	0.00	-927.70	168.007
-1	32	#NUM!	0.000	0.00	0.00	0.00	0.00	0
OD	32	#NUM!	0.000	0.00	0.00	#REF!	#REF!	0

MECH TOWER - W Eutectic

DIMENSIONS OF THE SUPER TOWERS

t1	oil reservoir	t2	absorber	t3	oil gap	t4	
5	15	10	1821.37	10	1	10	(units in mm)

		1	2	3	4	5	6	7	8
module 6	RA	25.00	25.00	25.00	25.00	25.00	25.00	25.00	25.00
	RB	99.76	99.86	100.18	100.39	138.88	139.09	139.11	139.32
	length A	4720.56	4725.56	4740.56	4750.56	6571.93	6581.93	6582.93	6592.93
	length B	4720.56	4725.56	4740.56	4750.56	6571.93	6581.93	6582.93	6592.93
	length C	69.07	69.17	69.46	69.66	105.22	105.42	105.44	105.63
module 5	RA	99.79	99.90	100.21	100.43	138.91	139.13	139.15	139.36
	RB	181.78	181.98	182.55	182.94	253.05	253.44	253.48	253.86
	length A	4722.28	4727.28	4742.28	4752.28	6573.65	6583.65	6584.65	6594.65
	length B	4722.28	4727.28	4742.28	4752.28	6573.65	6583.65	6584.65	6594.65
	length C	80.45	80.54	80.79	80.96	112.00	112.17	112.18	112.35
module 4	RA	181.90	182.09	182.67	183.06	253.17	253.55	253.59	253.98
	RB	258.03	258.30	259.12	259.67	359.13	359.67	359.73	360.28
	length A	4725.28	4730.28	4745.28	4755.28	6576.65	6586.65	6587.65	6597.65
	length B	4725.28	4730.28	4745.28	4755.28	6576.65	6586.65	6587.65	6597.65
	length C	74.75	74.83	75.07	75.22	104.04	104.19	104.21	104.37
module 3	RA	258.38	258.65	259.47	260.02	359.48	360.02	360.08	360.62
	RB	331.60	331.95	333.01	333.71	461.35	462.05	462.12	462.82
	length A	4731.63	4736.63	4751.63	4761.63	6583.00	6593.00	6594.00	6604.00
	length B	4731.63	4736.63	4751.63	4761.63	6583.01	6593.01	6594.01	6604.01
	length C	71.96	72.03	72.26	72.41	100.11	100.27	100.28	100.43
module 2	RA	332.02	332.37	333.42	334.12	461.77	462.47	462.54	463.24
	RB	470.57	471.07	472.56	473.55	654.46	655.46	655.56	656.55
	length A	4737.55	4742.55	4757.55	4767.55	6588.92	6598.92	6599.92	6609.92
	length B	4737.55	4742.55	4757.55	4767.55	6588.92	6598.92	6599.92	6609.92
	length C	138.38	138.53	138.97	139.26	192.46	192.75	192.78	193.07
module 1	RA	472.14	472.64	474.13	475.12	656.04	657.03	657.13	658.12
	RB	672.14	672.64	674.13	675.12	856.04	857.03	857.13	858.12
	length A	4753.39	4758.39	4773.39	4783.39	6604.76	6614.76	6615.76	6625.76
	length B	4767.48	4772.47	4787.46	4797.45	6617.69	6627.68	6628.68	6638.68
	length C	199.01	199.01	199.01	199.01	199.01	199.01	199.01	199.01
module 0	RA	667.82	668.53	670.64	672.05	928.46	929.86	930.00	931.41
	RB	0.00	0.00	0.00	0.00	0.00	0.00	0.00	0.00
	length A	4743.80	4748.80	4763.80	4773.80	6595.17	6605.17	6606.17	6616.17
	length B	4743.68	4748.68	4763.68	4773.68	6595.05	6605.05	6606.05	6616.05
	length C	-666.27	-666.97	-669.08	-670.48	-926.29	-927.70	-927.84	-929.24
module 0	RA	0.00	0.00	0.00	0.00	0.00	0.00	0.00	0.00
	RB	0.00	0.00	0.00	0.00	0.00	0.00	0.00	0.00
	length A	4720.00	4725.00	4740.00	4750.00	6571.37	6581.37	6582.37	6592.37
	length B	4720.00	4725.00	4740.00	4750.00	6571.37	6581.37	6582.37	6592.37
	length C	0.00	0.00	0.00	0.00	0.00	0.00	0.00	0.00

3.2 WEIGHT & VOLUME CALCULATIONS

2.2 ACTIVE THICKNESS OF EUTECTIC

Active Thickness of Absorbers

Design: Tungsten Eutectic/Liquid

Absorber: Tungsten Eutectic

Material	Density	Int Length	Percent	Metal IL	Actual IL
	g/cm^3	g/cm^2	% Vol	cm/L	cm/L
Absorber Composition			79.57%		
Lead	11.35	194.0	8.89%	17.09	192.24
Tin	7.31	163.0	6.88%	22.30	324.26
Cadmium	8.65	161.0	4.37%	18.61	425.97
Bismuth	9.80	194.5	19.28%	19.85	102.92
Tungsten	19.30	185.0	39.79%	9.59	24.09
SS Tube	8.02	131.9	3.84%	16.45	428.29
Sense Material					
Liquid	0.854	83.6	16.59%	97.89	590.07
					15.18
Totals	9.57		100%		15.18
Inverts	0.1045				0.0659

Hadron Make-up:

(By volume)

Material	Eutect.	Absorber	Total
Lead	22.3%	11.17%	
Tin	17.3%	8.64%	
Cadmium	11.0%	5.49%	
Bismuth	48.5%	24.23%	
Eutectic	99.1%	50.00%	
Tungsten		50.00%	
Absorber		100.00%	79.57%
SS Tube			3.84%
Liquid			16.59%
			100.00%

4.0 VENDOR'S PRICE QUOTE

TELEDYNE
POWDER ALLOYS

Manufacturers of Precision
High Density Tungsten Alloy
Products & Machinable Blanks

350 ALLWOOD ROAD
CLIFTON, NEW JERSEY 07012 USA
PHONE: (201) 773-4850
FAX: (201) 773-4421

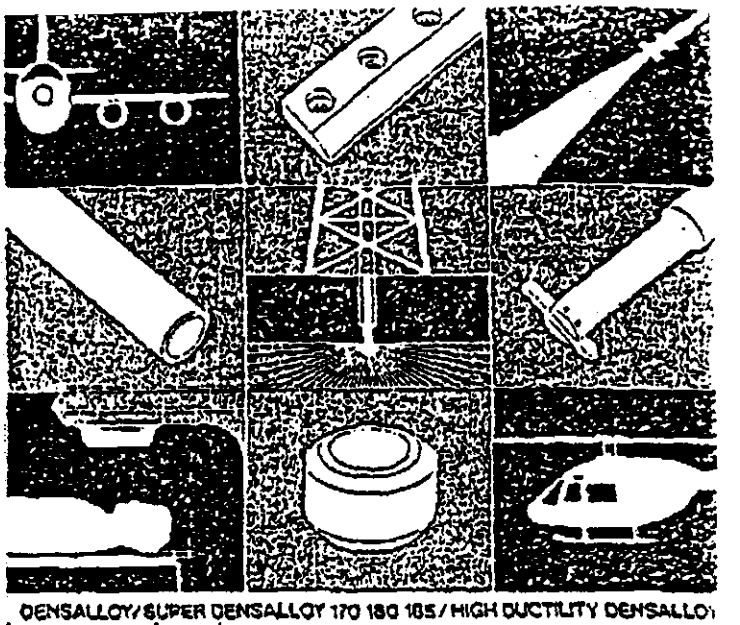

DENSALLOY/SUPER DENSALLOY 170 180 185/HIGH DUCTILITY DENSALLOY

FACSIMILE COVER SHEET

DATE: 4-21-92 FAX : 214-708-6088

COMPANY: SSC Lab

TO: Steve Chae

NUMBER OF PAGES INCLUDING COVER SHEET: 2

NOTES:

IF THERE ARE ANY PROBLEMS WITH THE TRANSMISSION OF THIS FAX, PLEASE CONTACT TELEDYNE POWDER ALLOYS AT THE ABOVE TELEPHONE NUMBER.

SENT BY: Rolf Kamper

ROLF KAMPER

TELEDYNE POWDER ALLOYS
350 ALLWOOD ROAD
P.O. BOX 887
CLIFTON, NEW JERSEY 07015
(201) 773-4850 FAX (201) 773-4421

QUOTATION NO: 11858
PAGE: 1
DATE: 4/21/92

In reference to your RFQ dated 4/07/92,
we are pleased to quote as follows:

OAKRIDGE NATIONAL LABS
BLDG. 1000
OAKRIDGE TN 37831-6365 USA

BUYER: STEVE CHAE

THE FOLLOWING ARE BUDGETARY PRICES
FOR THE TUNGSTEN MATERIAL TO BE USED IN TUNGSTEN EUTECTIC.

LN#	DESCRIPTION	QUANTITY	PRICE EA.
1	P/N: GRADE CTP 99% TUNGSTEN MIN,-60 MESH FLOWABLE	116600	12.00

Delivery per CUSTOMER SCHEDULE 20 weeks ARO lead time
SCOTT DENSITY 9 G/CC MIN
PRICES ARE PER POUND

2	P/N: GRADE STP 99% TUNGSTEN MIN,-60 MESH FLOWABLE	116600	12.00

Delivery per CUSTOMER SCHEDULE 20 weeks ARO lead time
SCOTT DENSITY 9 G/CC MIN
PRICES ARE PER POUND.

TERMS: 30 days Net F.O.B. Clifton, New Jersey
All sales shall be subject to the terms and conditions found on the attached sheet. Quotation firm for 30 days. Quoted prices firm fixed for delivery within ninety (90) days. Deliveries beyond ninety (90) days subject to metal escalation, unless otherwise agreed.

PREPARED BY: ROLF KAMPER - SALES COORDINATOR
AUTHORIZED BY:

TOTAL P.02

dated

BUYER: STA

37831-6365 USA

ANT PRICES
RIAL TO BE USED IN TUNGSTEN EUTECTIC.

QUANTITY	PRICE EA.
116600	12.00

RIPTION

P/N: GRADE CTP
99% TUNGSTEN MIN,-60 MESH FLOWABLE
Delivery per CUSTOMER SCHEDULE 20 weeks ARO lead time
SCOTT DENSITY 9 G/CC MIN
PRICES ARE PER POUND

116600 12.00

P/N: GRADE STP
99% TUNGSTEN MIN,-60 MESH FLOWABLE
Delivery per CUSTOMER SCHEDULE 20 weeks ARO lead time
SCOTT DENSITY 9 G/CC MIN
PRICES ARE PER POUND.

2

TERMS: 30 days net F.O.B. Clifton, New Jersey
All sales shall be subject to the terms and conditions found on the attached sheet. Quotation firm for 30 days. Quoted prices firm fixed for delivery within ninety (90) days. Deliveries beyond ninety (90) days, subject to metal escalation, unless otherwise agreed.

PREPARED BY: ROLF KAMPER - SALES COORDINATOR
AUTHORIZED BY:

KULITE TUNGSTEN CORPORATION
160 E. Union Avenue, East Rutherford, NJ 07073 U.S.A.
201/438-9000 FAX: 201/438-0891

TO:	SUPER CONDUCTOR LAB, TX.	FAX NO. 214-708-6088	DATE: 4/21/92
ATTN:	STEVE CHAE		MSG NO: 9355
REF:	VERBAL RFQ 4/13/92	PAGE 1 OF 1	SENT/DATE: TIME:

MESSAGE:

Dear Steve,

Kulite quotes the following price and delivery:

SPHERIDIZED TUNGSTEN +100 MESH

$25.00 TO $50.00 PER KG.

As soon as samples of this material becomes available, I will call you to get shipping information.

Best regards,

Bob

Bob Wilson

---END---

PHILIPS ELMET

CUSTOMER SERVICE FAX #(207)786-8924

FAX TO: MR. STEPHEN CHAE

LOCATION: MARTIN MARIETTA ENERGY SYSTEMS, OAK RIDGE, TENN.

MESSAGE: CONFIRMING OUR PHONE DISCUSSION OF PRICES FOR 1.0 X 1.0 MM PURE TUNGSTEN CYLINDERS PRESSED AND SINTERED TO 95% DENSITY, 33 METRIC TONS. IF PRODUCED FROM EXISTING EQUIPMENT $77.00/KG (PRICE ACCURACY ESTIMATED AT ±20%). — IF CAPITAL EQUIPMENT MUST BE ADDED TO MEET SHIPPING DEADLINE PRICE COULD ESCALATE TO $120.00/KG.

I AM SENDING SAMPLES OF TYPICAL PARTS VIA FED X TODAY. PLEASE CALL IF YOU HAVE ANY QUESTIONS.

REGARDS,

Steve Van Savage

FROM: STEVE VANSAVAGE
PRODUCT SALES MANAGER

DATE SENT: 4/15/92

NUMBER OF PAGES SENT INCLUDING COVER SHEET:

PLEASE NOTIFY US IF NOT RECEIVED PROPERLY - (207)784-3591 EXT. 112

PHILIPS ELMET
1560 LISBON RD. • LEWISTON, MAINE 04240 • (207)784-3591 • TWX (710)223-0675 • FAX (207)786-8924
A DIVISION OF NORTH AMERICAN PHILIPS CORPORATION

Philips Lighting

Product Information

Philips Elmet

Tungsten and Molybdenum Pressed and Sintered Powder Metal Parts

Among the characteristics which make tungsten and molybdenum useful metals are their high melting points along with high tensile properties and hardness. These same properties also make it difficult for simple and economic production of powder metallurgy parts. Over the last several years, Philips Elmet has successfully developed the powder metallurgy process for the commercial production of moly and tungsten diode studs. They are now being supplied to customers around the world in quantities in excess of a billion parts per year.

Ten years ago, all refractory metal diode studs were supplied as wrought metal parts. That is, they were cut from the worked metal rod feed stock. Today, virtually all moly diode studs, except for the largest sizes, are pressed and sintered directly from powder. And at this time, tungsten diode stud users are in the process of converting to the powder metal studs.

This technology also lends itself to the production of other parts. Listed below are some of the parameters to be considered in evaluating such products for practical commercial production.

Materials: HEAVY MET,

Molybdenum and tungsten only. Philips Elmet has unique capabilities for these two materials. There is also the possibility of mixing moly and tungsten, and/or making multi-layer parts, i.e., moly/tungsten/moly.

Shapes:

Because of the requirement to get parts out of the die cavities quickly and easily, shapes must necessarily not be complex. Such simple shapes are: **cylinders, discs, cubes, rectangles, stepped discs, washers, spheres.** In general, symmetrical shapes are most easily produced.

Size Considerations:

Maximum Overall Envelope	.250"x.250"x.250"
Optimum Length to Width (Diameter/Thickness)	1:1
Greatest Length to Width	1.5:1
For Discs or Squares	
Maximum Diameter/Width	.250"
Minimum Thickness	10% of Diameter or Width
Minimum Diameter/Width	.030"
Minimum Thickness	10% of Diameter or Width

Tolerances:

Diode Studs: +/- .002" on length +/- .001" on diameter
Other Parts: Similar to diode studs

Density:

Moly and Tungsten: 95% Min. 98% Typical

Economics:

Powder metallurgy parts are more economical than equivalent wrought parts because of the elimination of scrap or kerf along with reduced labor input. Cost savings in the range of 10 to 30% are possible. These savings are offset somewhat, however, by high tooling costs if production runs are not large enough.

In general, for diode stud shapes, production runs of several hundred thousand to less than a million pieces can be done economically. For other shapes, such as a stepped disc or cylinder, a run of a million or more pieces may be required.

Applications:

- Diode Studs
- Rectifier Discs
- Magnetron Parts (End Hats, Washers)
- Military Penetrators (Cubes, Spheres)
- Balance Weights

PHILIPS

PHILIPS