GEM TN-92-82

GEM Magnet Subsystem Industrial Subcontractor Information Meeting

April 1, 1992

Abstract:

Agenda and transparencies of the GEM Magnet Subsystem Industrial Subcontractor Information Meeting held at the SSC Laboratory on April 1, 1992.

Superconducting Super Collider

GEM Magnet Subsystem Industrial Subcontractor Information Meeting

Superconducting Super Collider Laboratory
April 1, 1992

Agenda

GEM Magnet Subsystem
Industrial Subcontractor Information Meeting

1 April, 1992
Superconducting Super Collider Laboratory

Time	Subject	Speaker
9:00	Gem Project Introduction	Sanders
9:20	Magnet Subsystem Introduction & Schedule	Stroynowski
9:30	Procurement Issues	Fischer
9:45	Magnet Design/Performance Requirements	Deis
10:00	Magnetic Field Design/Forces	Marston
10:20	Break	
10:35	Conductor design	Minervini
10:50	Coil Design Description	Smith
11:15	Vacuum Vessel /Vac system	Bowers
11:30	Radiation Shields,Cold Mass Supports, Assembly Approaches	Yamamoto
12:10	Break - Lunch	
1:30	Forward Field Shaper, Central Membrane	Bowers
1:45	Structural analysis	Wineman/Titus
2:15	Facilities and Installation	C. Johnson
2:35	Cryogenic systems/cold testing	Warren
2:55	Power/Protection/Control system	Oberst
3:05	Management Aspects/Conclusion	Sanders

Rev F - 3/31/92

Superconducting Super Collider

GEM Project Introduction

Gary Sanders,
GEM Project Manager

Los Alamos National Laboratory
April 1, 1992

OPENING REMARKS

The purpose of this Technical Interchange meeting is to provide industrial attendees with a technical description of the GEM solenoid magnet requirements and design, the status of current program activities, and a projected schedule of future activities.

The GEM detector project has been approved to proceed to a Technical Design Report (TDR). Based upon the TDR, the GEM project will be reviewed by the SSCL, through its Program Advisory Committee (PAC), and by the DOE. Final approval for construction of GEM will be dependent upon these reviews.

Determinations of the scope and schedule for industrial community involvement have not been finalized nor received SSCL or DOE approval; therefore, any disclosures or discussions relating to this involvement must necessarily be considered preliminary and subject to potential change.

Written comments from the meeting attendees on all aspects of the presented material is encouraged. These comments will be considered when finalizing GEM magnet plans.

The GEM Experiment Collaboration

GEM submitted an Expression of Interest to SSCL in July, 1991 and was approved to proceed to a Letter of Intent. The Letter of Intent was submitted in November, 1991, and GEM has been approved to proceed to a Technical Design Report by late 1992.

Laboratory guidance has set $500 million as design to cost target for each of the two major detectors. However, SSCL has committed only $550 million for the combined funding of both detectors. The remaining funds must be supplied from sources outside the SSC project (other federal, non-federal, and non-US sources).

The GEM collaboration currently consists of 650 scientists and engineers, from 85 institutions including 15 foreign countries. US national laboratories committed to GEM include BNL, LANL, LLNL, ORNL and Draper. Major foreign laboratories in St. Petersburg, Moscow, Dubna, and Beijing are committed to GEM.

SSCL POLICY ON DETECTORS AT START OF PHYSICS PROGRAM

SSCL has stated that it is planning a program with two major detectors at commencement of SSCL beam program. The two detectors shall be complementary in that they shall each be capable of physics experiments outside the capabilities of the other, but that they shall overlap in physics capabilities adequately to insure that a large class of discovery physics can be verified by results from two distinct detectors.

CONSEQUENCES OF THIS POLICY FOR THE GEM MAGNET

The GEM magnet is the critical path subsystem for GEM. Failure to deliver a working magnet to SSCL at the required time results in a major failure of the physics program. The magnet schedule is an overriding concern.

Typical SSC Large ExperimentalHall

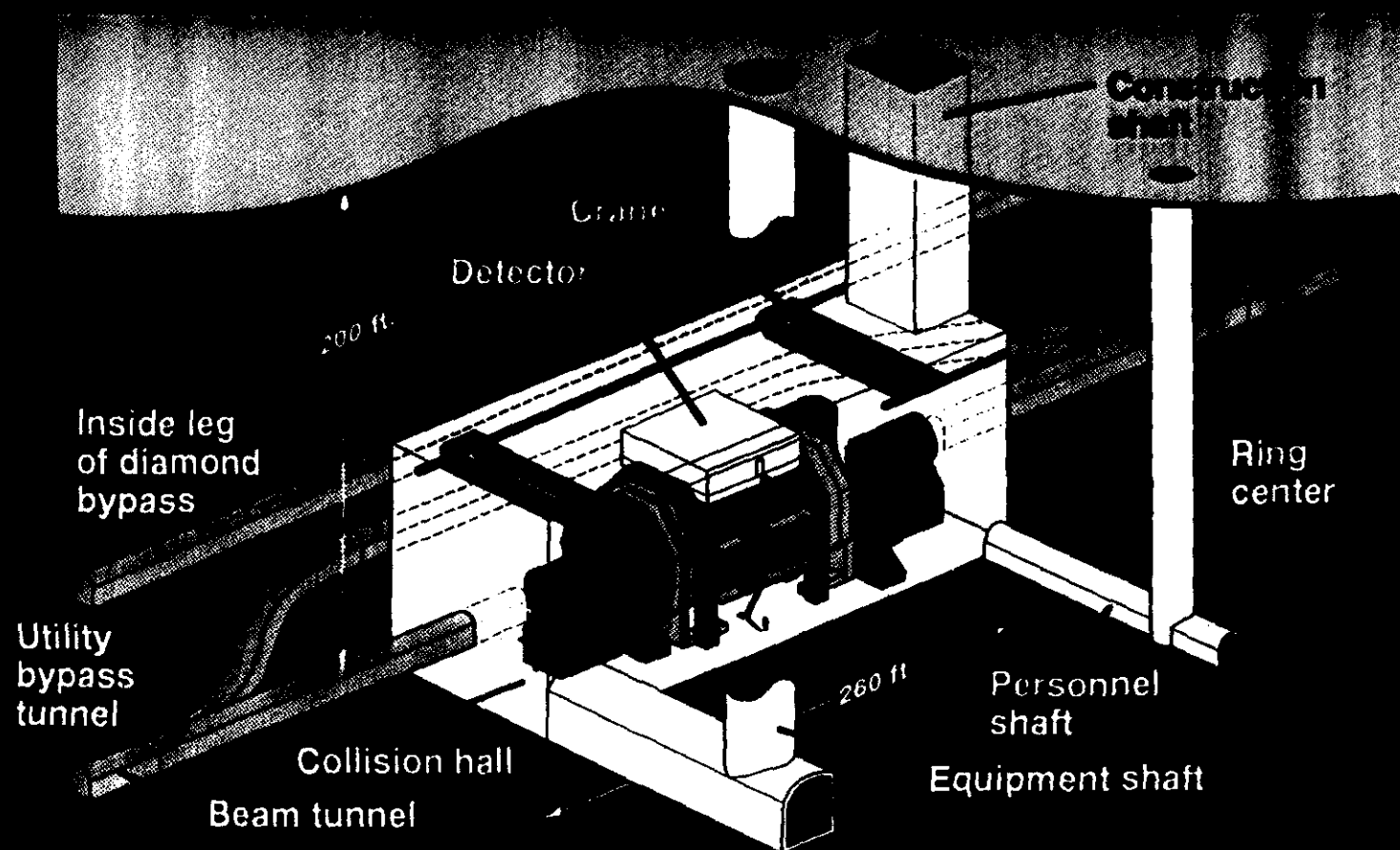

91-08-83003/A

One Type of Detector

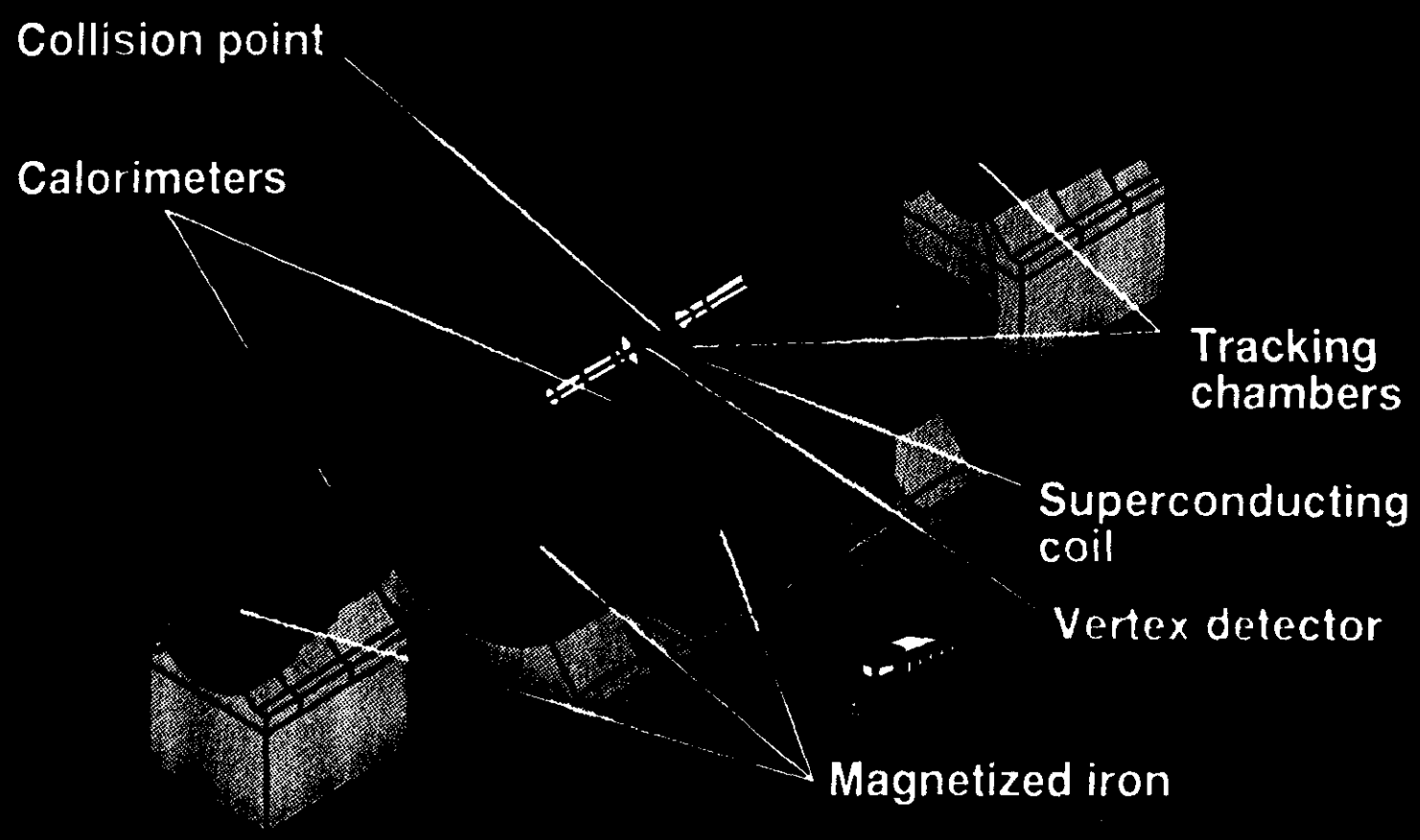

91–07-83003A3

GEM DETECTOR

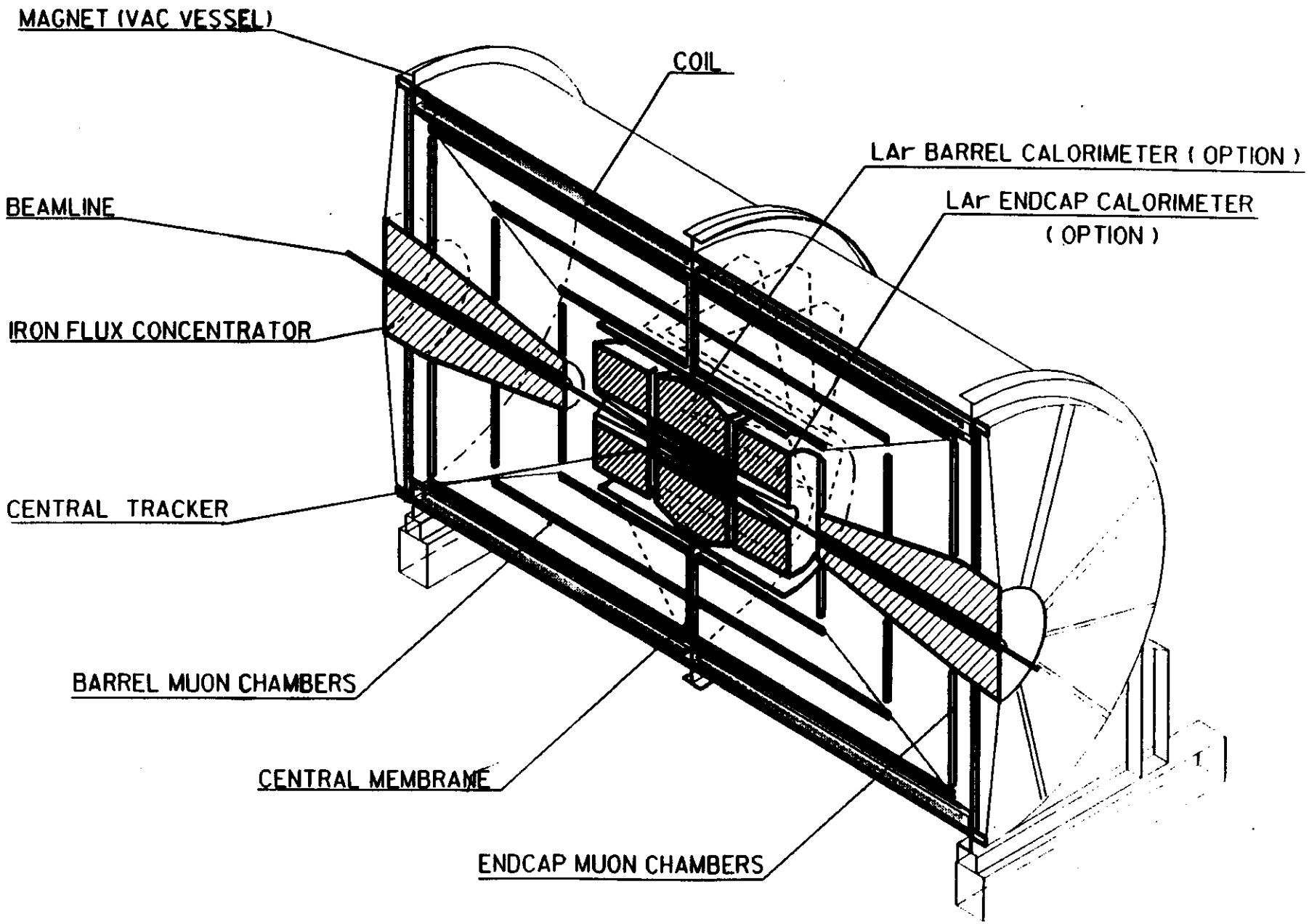

GEM DETECTOR

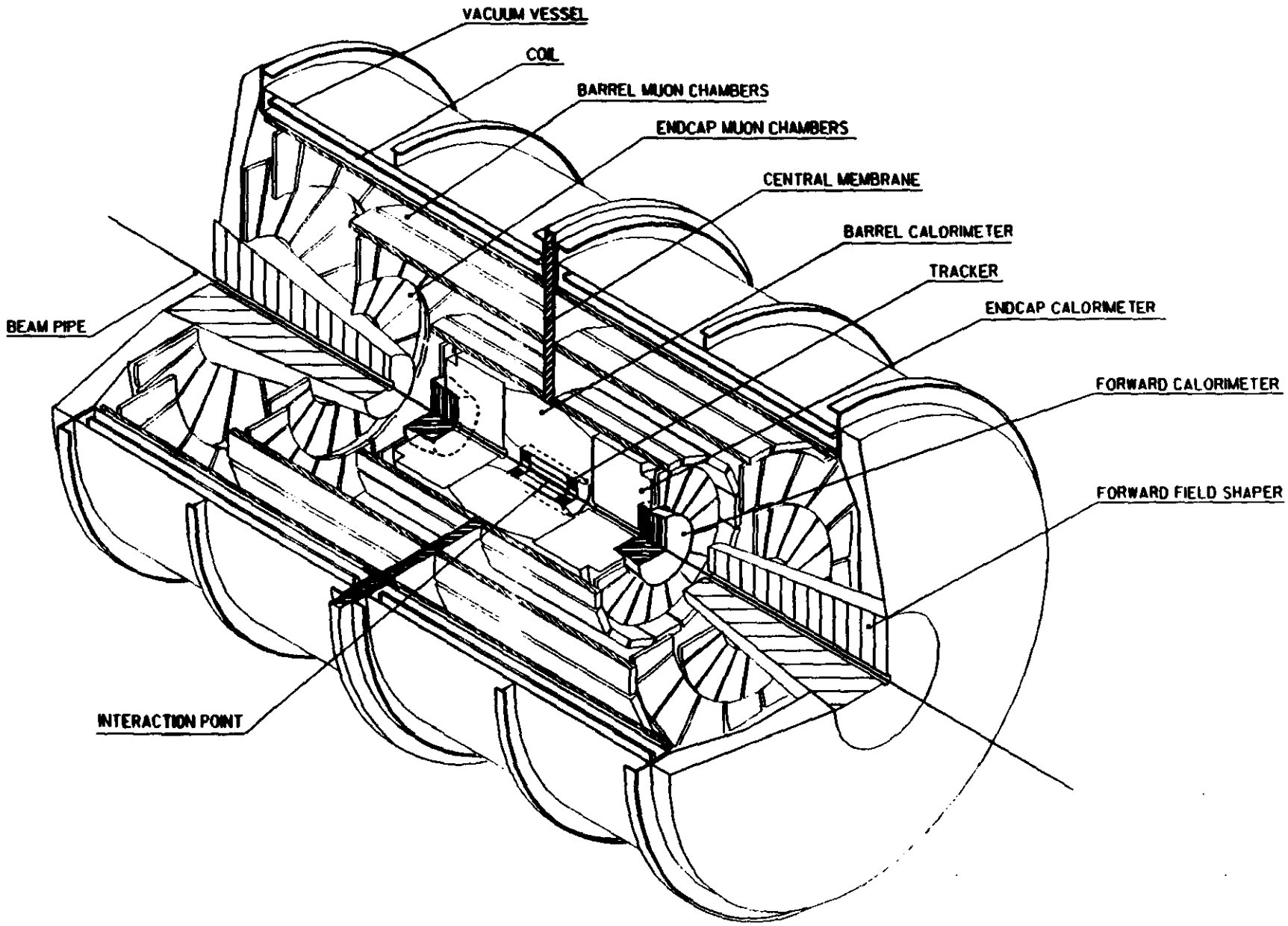

ISOMETRIC GEM920305.ZC

GEM DETECTOR

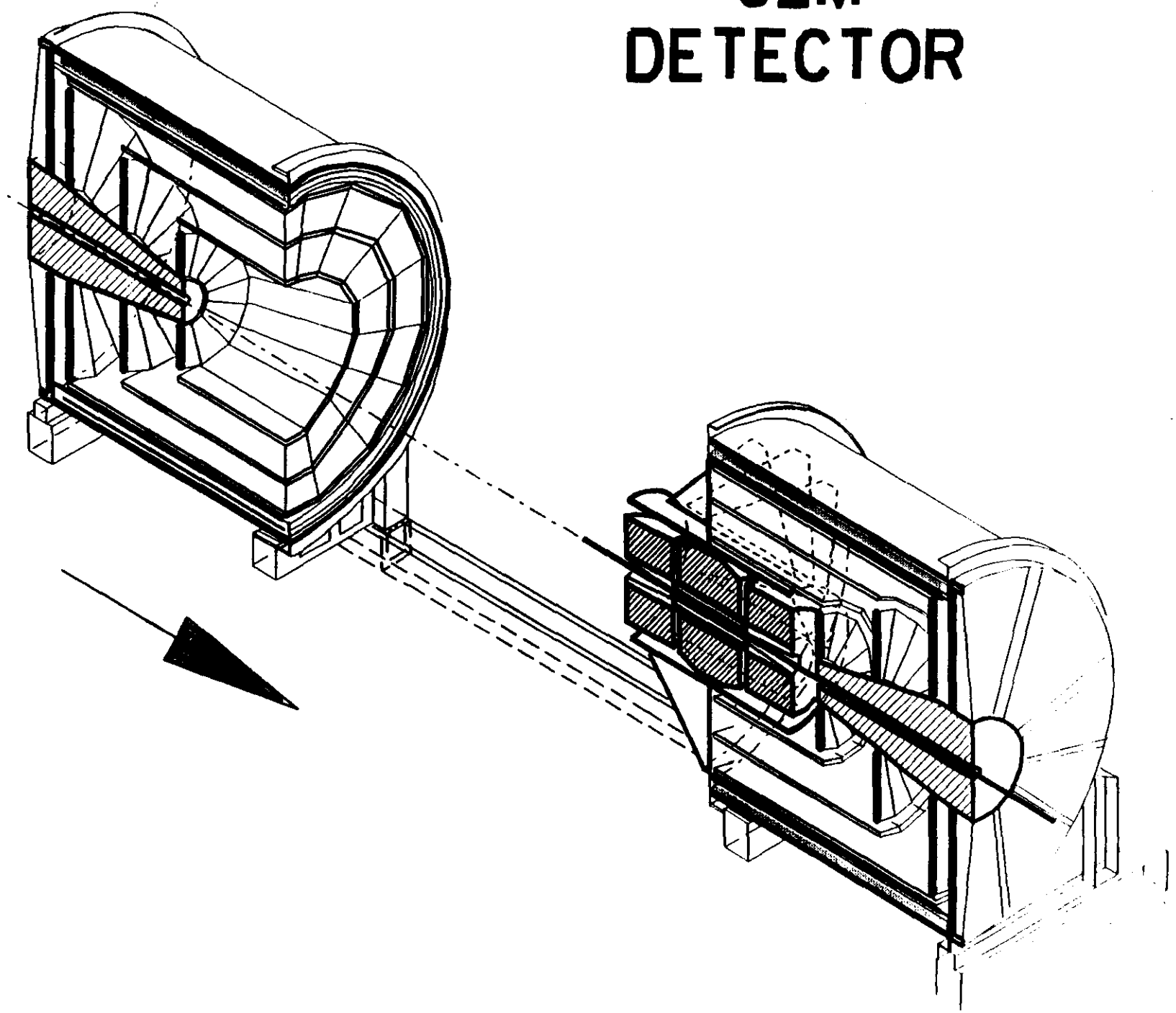

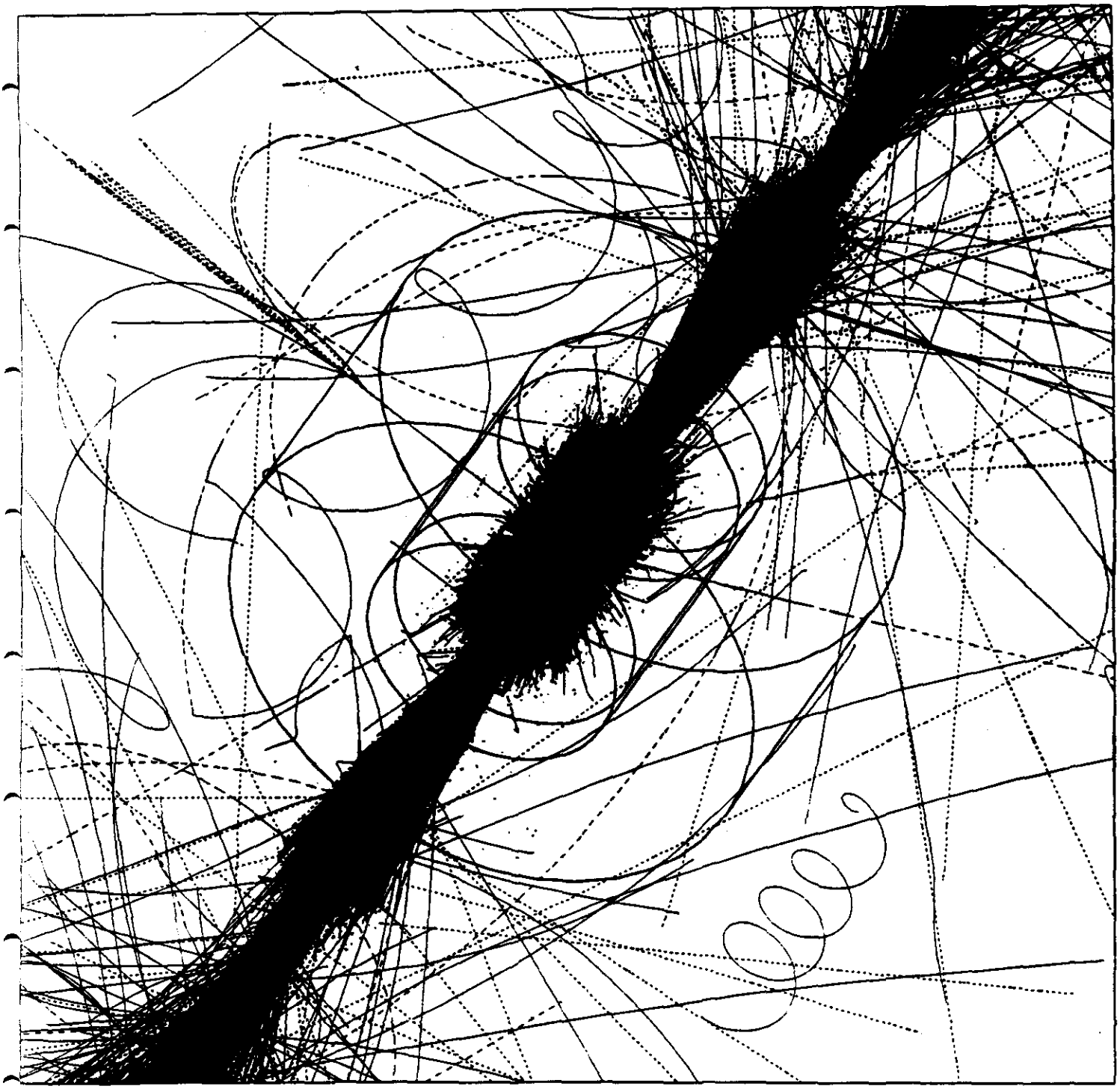

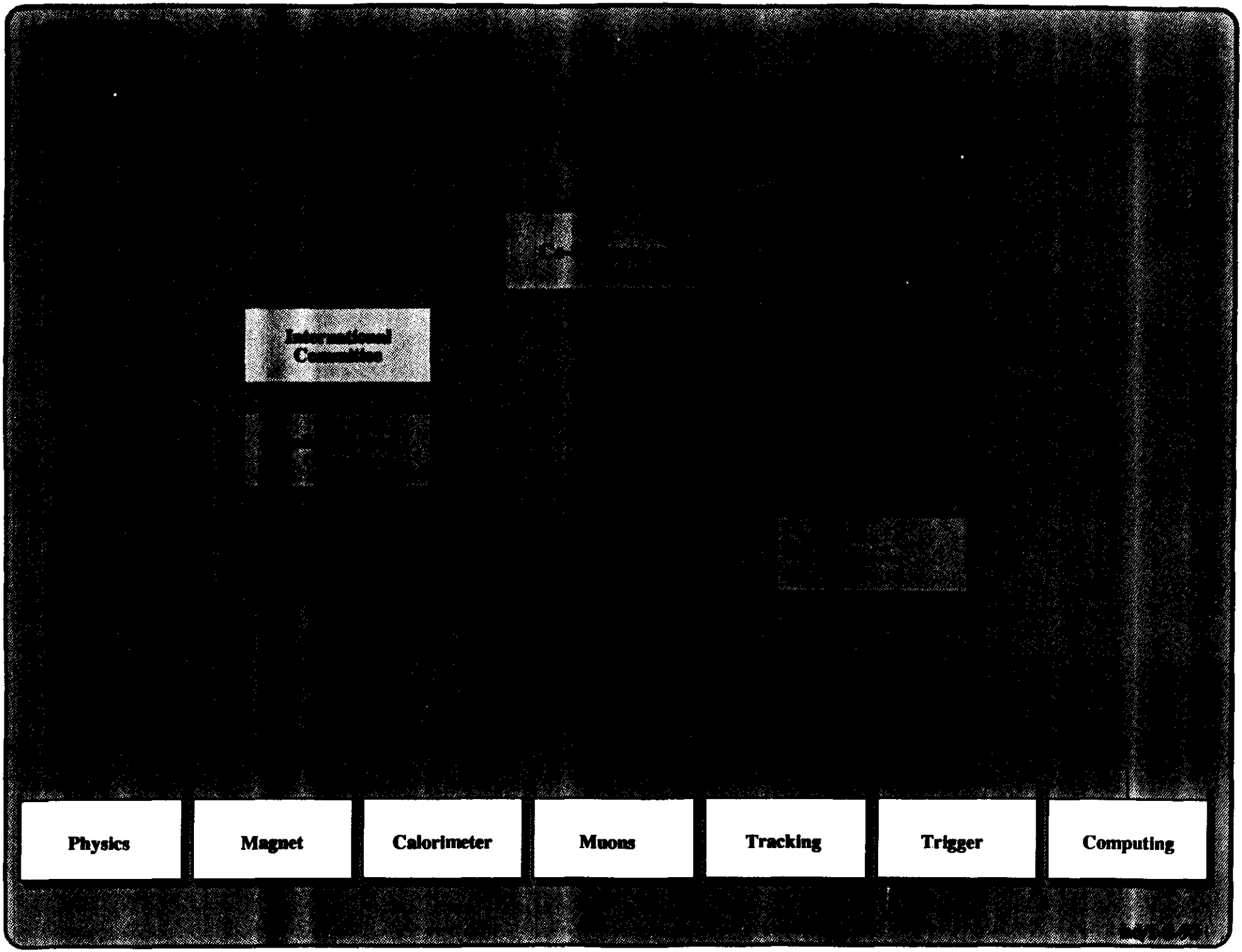
Physics
Magnet
Calorimeter
Muons
Tracking
Trigger
Computing

ES&H Group
R. Woolley

Document
Control Group
E. Walton

Engineering
Group
M. Harris

Program Planning
Bus. Oper/Group
R. Fischer

Support Group
H. Durden

Director
R. Schwitters

Library
P. Kreis

Theory
F. Gilman

Magnet Advisor
Paul Reardon

GEM Project Manager
G. Sanders

GEM MAGNET OFFICIAL CONTACTS

All official contacts relating to the GEM Project, the magnet project, schedule, procurement and policy should be made through:

Dr. Gary Sanders - GEM Project Manager
MS 2005
SSC Laboratory
2550 Beckleymeade Avenue
Dallas, TX 75237-3997

214-708-6189 **505-667-7325 (Los Alamos)**
214-708-6088 fax **505-665-3858 fax**
SANDERS@SSCVX1.SSC.GOV

All official contacts relating to technical aspects of the GEM magnet should be made through:

Dr. Ryszard Stroynowski
Southern Methodist University
Dept. of Physics
Dallas, TX
214-632-4076
214-708-6043 (SSC Laboratory secretary LuAnn Ballard)
214-708-6088 fax

The GEM magnet design team is based at LLNL/MITPFC/SSCL.

GEM MAGNET PRELIMINARY SCHEDULE

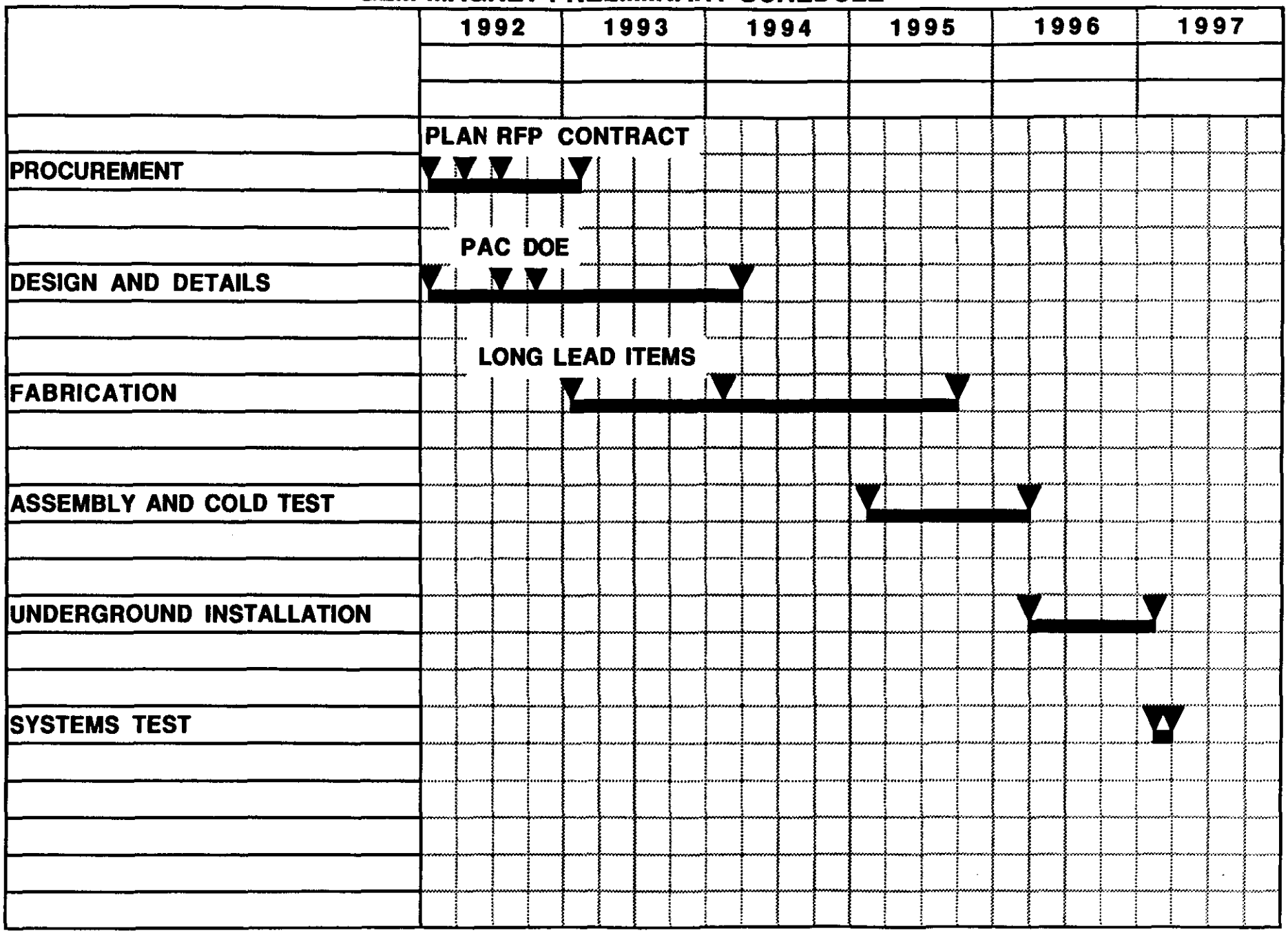

Tuesday, March 31, 1992

Superconducting Super Collider

Magnet Subsystem Introduction

Ryszard Stroynowski,
Magnet Lead Physicist

Southern Methodist University
April 1, 1992

GEM EXPERIMENT

- AIM : DISCOVERY OF NEW PARTICLES OR EFFECTS AT VERY HIGH ENERGIES

- BIG PRIZE: HIGGS BOSON - RESPONSIBLE FOR GENERATION OF MASSES OF FUNDAMENTAL PARTICLES

  MASS = (90 ÷ FEW HUNDRED) × MASS OF THE PROTON

  DECAY MODES : $H \rightarrow \gamma\gamma$

  $H \rightarrow eeee,\ ee\mu\mu,\ \mu\mu\mu\mu$

  + others

- GEM EXPERIMENT EMPHASIS - DETECTION OF γ, e, μ

GEM DETECTOR LAYOUT

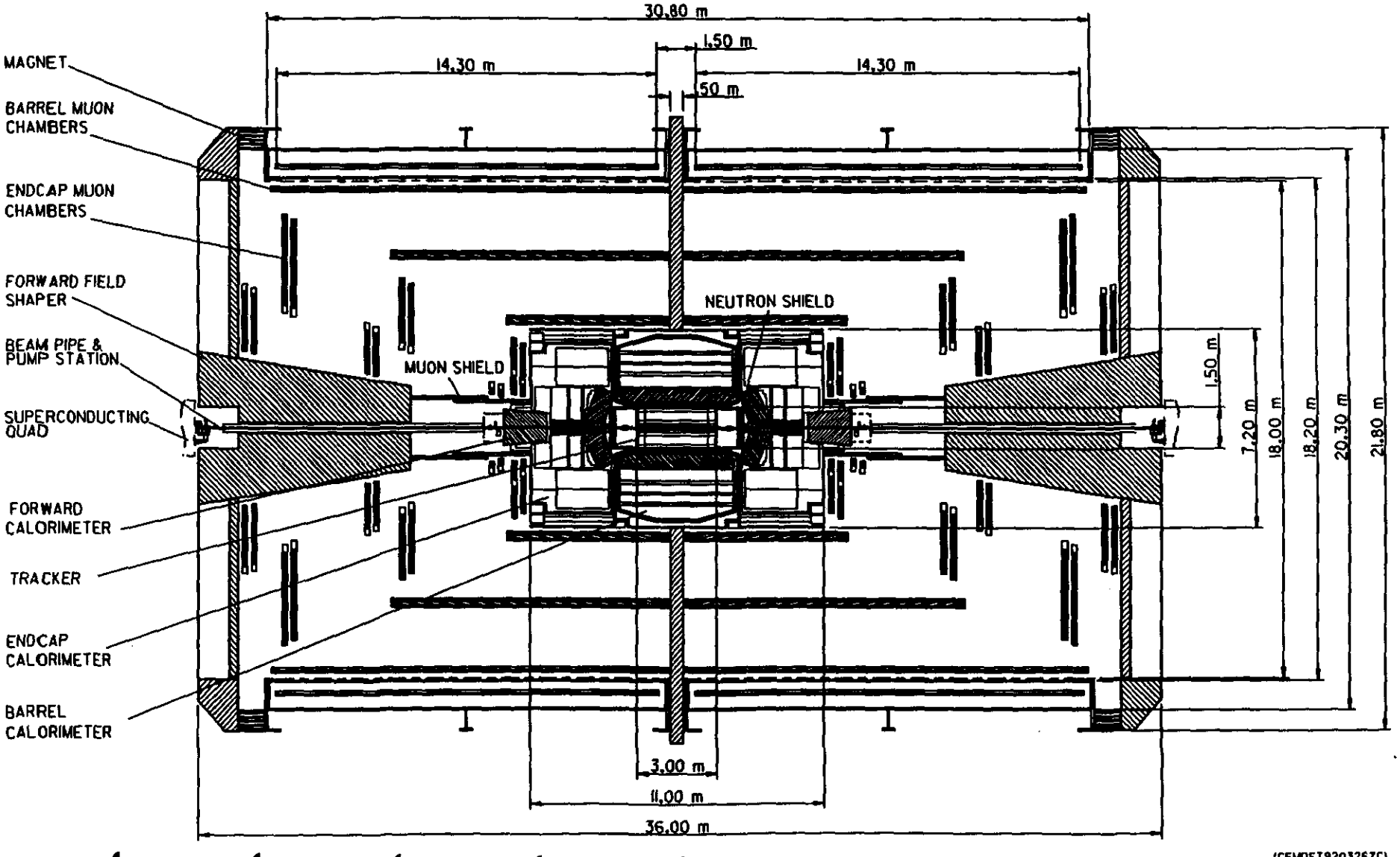

(GEMDET920326ZC)

- CONCEPT OF THE DETECTOR

1) BEST POSSIBLE γ AND e MEASUREMENTS WITH ELECTROMAGNETIC CALORIMETER DETECTOR (MINIMUM AMOUNT OF MATERIAL IN FRONT OF CALORIMETER IS REQUIRED)
2) CHARGED PARTICLE TRACKING IS NEEDED TO DISTINGUISH γ FROM e.
3) BEST POSSIBLE MUON MOMENTUM RESOLUTION OBTAINED BY MEASURING MUON TRAJECTORY INSIDE MAGNETIC FIELD VOLUME. REQUIRES LARGE LEVER ARM FOR MUON TRACKING AND PRIOR ABSORPTION OF OTHER PARTICLES
   $\longrightarrow$ LARGE VOLUME (RADIUS) OF THE MAGNET
4) IF/WHEN NEW PHYSICS WILL BE DISCOVERED, GEM WILL FURTHER UPGRADE MUON MEASUREMENTS CAPABILITY BY ADDING TRACKING CHAMBERS OUTSIDE THE MAGNET.

- CONSTRAINTS ON THE MAGNET IMPOSED BY EXPERIMENT

DIMENSIONS — LARGE RADIUS, FORWARD FIELD CONCENTRATOR, FIXED

FIELD — MODERATE 0.8 T
- MUST BE SUFFICIENT TO PROVIDE MOMENTUM RESOLUTION BY BENDING TRAJECTORIES OF CHARGED PARTICLES
- SUBCOMPONENTS MUST WORK IN SUCH FIELD WITH DESIRED PRECISION

SCHEDULE — MUST BE READY IN 1996 IN ORDER TO ALLOW FOR SUBSYSTEMS INSTALLATION BEFORE START OF ACCELERATOR OPERATIONS.

TIME AVAILABLE FOR MAGNET CONSTRUCTION IS THE MOST SEVERE CONSTRAINT ON THE MAGNET DESIGN AND PROCUREMENT DRIVING MOST OF THE DECISIONS TOWARDS SIMPLICITY AND PARALLELISM.

STABILITY AND SAFETY
- TRACKING REQUIRES PRECISE KNOWLEDGE OF THE FIELD AND POSITION. BOTH SHOULD BE STABLE IN TIME
- THE COLLABORATION HAS ~600 PHYSICISTS NOW AND WILL GROW TO ~1000 BY 1997. SAFETY ISSUES ARE PARAMOUNT.

INSTALLATION SEQUENCE REQUIREMENTS

1.	Underground Hall ready (unequipped)	January, 1996
2.	Install Magnet Rails	January, 1996
3	Underground Hall completed	April, 1996
4.	Install Magnet Flux Concentrator (south)	May, 1996
5.	Install Magnet Half Coil (south)	May, 1996
6.	Install Central Membrane	June, 1996
7.	Install Magnet Half Coil (north)	June, 1996
8.	Install Magnet Flux Concentrator (north)	June, 1996
9.	Test Magnet Systems	February, 1997
10.	Map Magnet Field	March, 1997
11.	Install Calorimeter	June, 1997
12.	Install Muon Barrel	September, 1997
13.	Cold Test Calorimeter	October, 1997
14.	Install Tracker	December, 1997
15.	Close Magnet Coil Halves	February, 1998
16.	Install Muon Endcaps	March, 1998
17.	Complete Subsytem Connections	September, 1998
18.	Close Detector	October, 1998
19.	Install Collider Components	October, 1998
20.	Complete Beamline	January, 1999
21.	Complete Tests and Checkouts	March, 1999
22.	Commission Collider	April, 1999
23.	Detector Ready for Physics	October 1999

The above dates are dependent on the beneficial occupancy date of the underground hall which is still under discussion and the availability of the magnet components at that date. Should this subsystem be late then it is intended to install the central membrane first, followed by the calorimeter and then the magnet components which would be lowered through both construction shafts.

Superconducting Super Collider

Magnet Procurement Issues

Richard Fischer

Superconducting Super Collider Laboratory
April 1, 1992

GEM SOLENOID MAGNET
TENTATIVE PROCUREMENT SCHEDULE

INDUSTRIAL TECHNOLOGY MEETING	APRIL 1992
SUBMIT GEM MAGNET ACQUISITION PLAN TO DOE FOR APPROVAL	MAY 1992
SUBMIT GEM MAGNET *DRAFT* RFP TO DOE	early JULY 1992
RELEASE *DRAFT* MAGNET RFP FOR COMMENTS	mid JULY 1992
INDUSTRIAL TECHNOLOGY MEETING-(OPTIONAL)	late JULY 1992
RECEIVE COMMENTS ON *DRAFT* RFP	late JULY 1992
RELEASE MAGNET RFP TO BIDDERS	AUGUST 1992
GEM MAGNET PROPOSALS DUE TO SSCL	SEPTEMBER 1992
PROPOSAL EVALUATIONS, FACT-FINDING AND NEGOTIATIONS COMPLETE	NOVEMBER 1992
SUBMIT CONTRACT PACKAGE TO DOE FOR APPROVAL	DECEMBER 1992
GEM MAGNET CONTRACT AWARD	JANUARY 1993

Subject to PAC and DOE Approval

Subcontract Phases

Contract Award	Final Design	Procurement & Fabrication	Assembly	Installation & Test	Contract Complete
	• Start-up activities • Joint development of detailed design & drawings	• Make or buy analysis • Long lead tooling and material procurement • Component fabrication on & off-site	• Transportation of assemblies & components to installation site • On-site assembly	• Install magnet components in-hole • System test	

Ongoing effort: Perform Program Management & Systems Engineering

GEM DETECTOR MAGNET
SUBCONTRACTOR SCOPE OF WORK

FINAL DETAILED DESIGN

1. Technology transfer.

2. Finalize detailed design parameters.
   - detailed drawings
   - specifications
   - tooling design

MAGNET PROCURMENT AND FABRICATION

3. Initiate long-lead tooling material procurement.

4. Initiate long-lead magnet material procurement.

5. Fabricate magnet components.

6. Test magnet components.

ASSEMBLY

7. Transportation of assemblies and components to the installation site.

8. Perform on-site assembly.

INSTALLATION AND TEST

9. Installation of magnet components in-hole.

10. System test.

ON GOING

11. Perform Systems Engineering over life of contract.

12. Perform Program Management over life of contract.

Superconducting Super Collider

Magnet Design/Performance Requirements

Gary A. Deis

Lawrence Livermore National Laboratory
April 1, 1992

VG-GEM-92-008/4-1
3/29/92

Magnet design/performance requirements derive from overall GEM detector requirements

Top-level detector design/performance requirements are still being defined and documented. At the highest level, GEM must:

- Maximize physics discovery potential at the SSC
- Complement/overlap the capabilities of SDC (the other detector for SSC)
- Cost less than $500M (FY91 US$)
- Begin physics operation in 10/99
- Adhere to all applicable ES&H requirements at the SSCL

Subsystem design/performance requirements are still being developed

The magnet subsystem is on the critical-path for GEM, so we are attempting to document and freeze the requirements at this time.

- Highest-level requirement on the magnet subsystem is to provide appropriate magnetic field for proper function of central tracker and muon subsystems

- Magnet must also:
  - operate with adequate duty cycle
  - provide physical support for muon system
  - provide for internal detector access
  - meet cost/schedule targets

The first version of the detailed magnet subsystem requirements is discussed in the following slides

Magnet Overall Configuration Requirements

- Magnet is an open solenoid (no flux return) with field-shapers in the endcap regions
- Overall dimensions are 9.0m inner radius, 30.8m length
- Magnet is split at the midplane into two separate pieces, which move apart axially to permit access to internal detectors
- Support for central detectors is free-standing; magnet axial loads are reacted through membrane without contacting it
- Magnet design should provide space for possible future addition of detectors on the outside of the cryostat

Magnetic field requirements

- Central field: 0.8T at the center, symmetric about axis to 0.5%. Present design allows 1.5m gap between windings at midplane

- Endcap field distribution: defined by the shape and location of the required field-shaping iron

- Accuracy: the field and distribution must be known at all times during operation to TBD% (we estimate this requirement to be 0.1%). This may require:

  initial detailed mapping

  and/or

  continuous monitoring at many locations

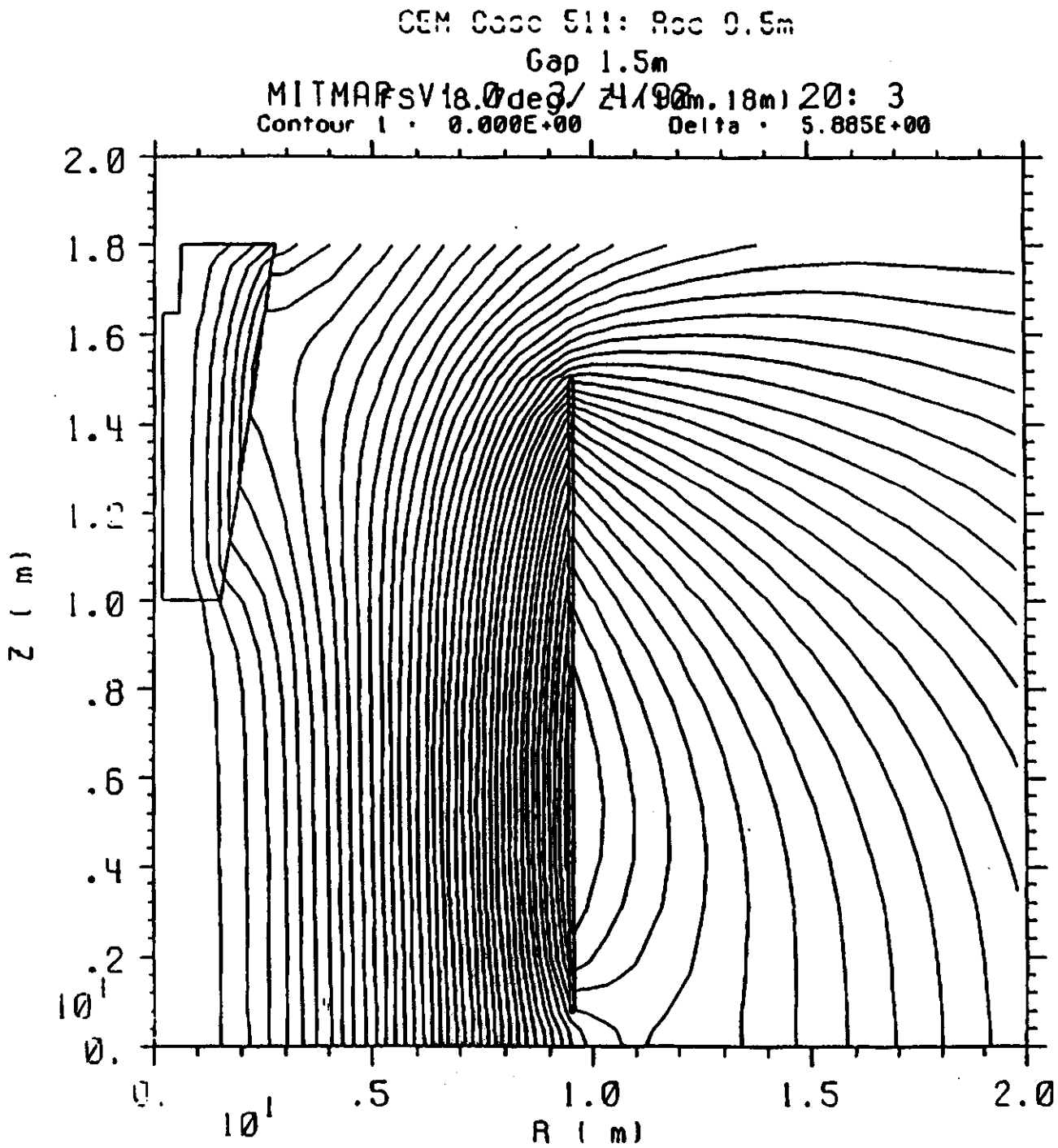

CONTOURS OF CONSTANT FLUX

Fig. 3.3 b

Duty cycle and lifetime requirements

- Normal charge/discharge time: 8-10 hours (max)
  (immediate re-start possible)

- Emergency discharge time: 5 minutes

- Operate continuously for 6 months with high reliability

- Design lifetime:
  20 years
  100 thermal cycles
  200 magnetic cycles
  200 emergency discharge cycles

Alignment requirements

- The magnet and magnetic field must be aligned to the collider, but detailed requirements are TBD at this time. Adjustment must be provided, in order to compensate for ground motion.

- The various parts of the magnet subsystem must be mutually aligned also.

- Specific locations on the magnet vessel must be stable during operation, since the vessel supports the muon subsystem, which has tighter alignment tolerances

Codes and Standards

- Design to the intent of the ASME and ACGA codes, but code-stamp is not required. Requirements will vary by component.
- Seismic standards - no formal standards exist for the SSCL (yet). Standards have been found for a local nuclear plant. We will assume the same peak displacements, with a spectrum similar to that used at LLNL.
- Normal DOE ES&H standards for projects of this type will apply
- Other standards will be defined as design/specification progresses.

GEM DETECTOR ELEVATION

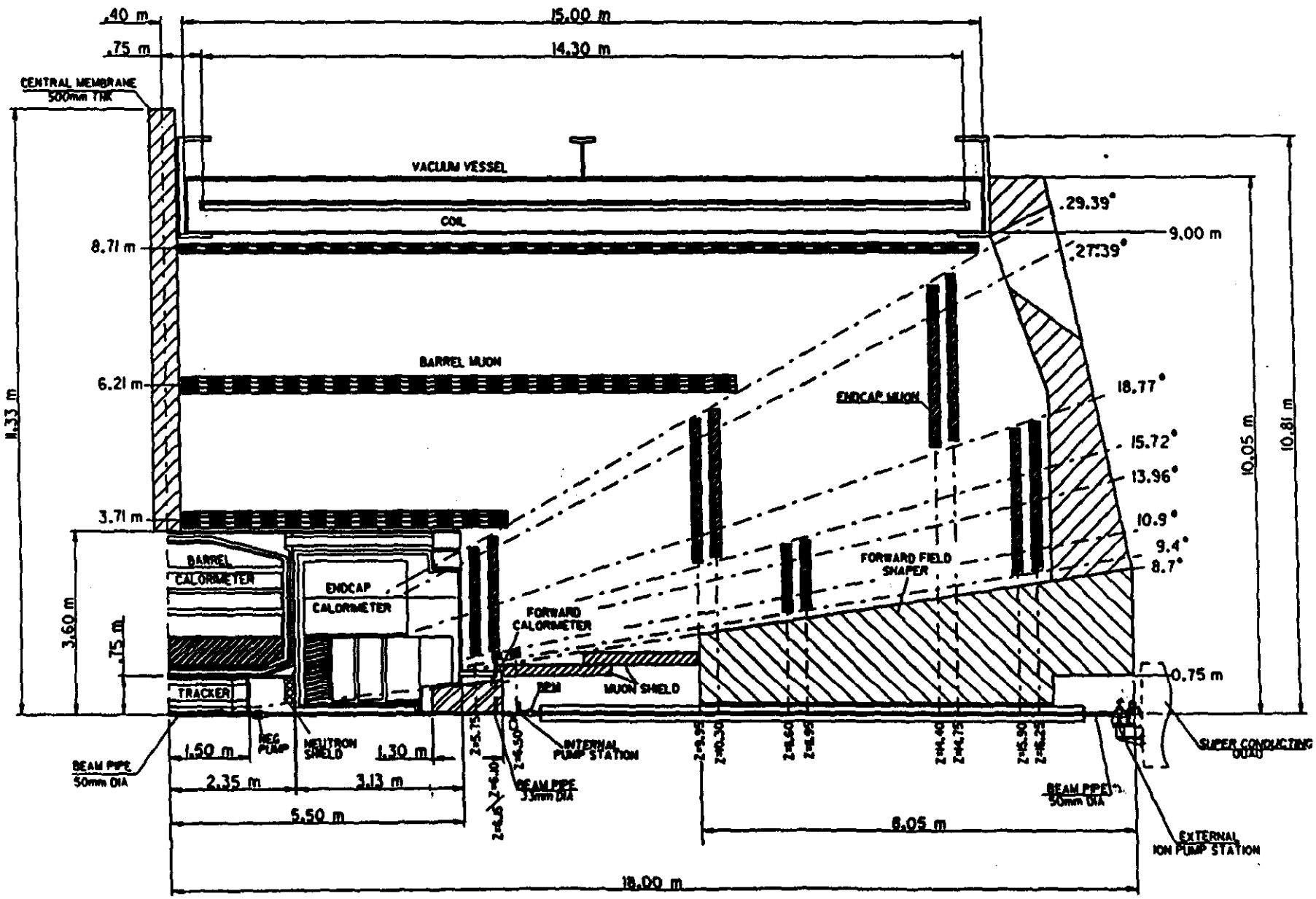

Z. CHEN
(GEMDET920319)

Interface requirements

There are requirements from the magnet interface with:

- Central Tracker - provide physical support (through calorimeter), accomodate installation
- Calorimeters - provide physical support, withstand LiAr spill, accomodate installation
- Muon subsystem - provide STABLE physical support and alignment, provide for installation
- Facility - Title 1 design is starting, and the magnet design must accomodate the resulting facility design: support locations, heat loads, stay-clear zones, assembly areas, etc, etc. More details in a later talk.

Magnet design/performance requirements summary

- Top-level GEM performance requirements are "known," and are being documented
- Magnet subsystem requirements are evolving rapidly, and the first version of a requirements document has been produced. There are many TBD's and many omissions at this time.
- These requirements will be firmed up and documented prior to RFP release.

GEM Magnet Subsystem

Major Parameters List

Rev. 6

3/28/92

	Parameter	Symbol	Unit	Value	Ref.	Note	Rev
1	Central Induction	Bi	T	0.80	11	5	1
2	Mean radius of windings	Rw	m	9.50	12	5	5
3	Outer Radius of outer cryostat vessel	Rv,o	m	10.15	12	5	5
4	Inner Radius of inner cryostat vessel	Rv,i	m	9.10	12	5	5
5	Inner Radius, magnet subsystem		m	9.00	11	5	5
6	Coil length, end-to-end (per half)	Li	m	14.438	12	5	5
7	Cryostat vessel length (each half)	Lv	m	15	12	5	5
8	Conductor Length	Lc	km	27.2	12	5	5
9	Total mass of coil windings (per half)	Mw	t	153	10	5	5
10	Total mass cold 4°K struct. (per half)	Mcs	t	520	13	6	6
11	Total mass cryostat vessel(each half)	Mv	t	851	10	5	5
11	Total mass, magnet assy (each half)	Mv	t	1300+	10	5	5
12	Total mass, FFS+support (each one)	Mp	t	1265	12	5	5
13	Radial pressure on windings	Pr	kPa		12	5	5
14	Operating current	I	kA	50.2	12	5	5
15	Stored Energy	Es	GJ	2.5	12	5	5
16	Inductance	H	H	1.98	12	5	5
17	Number of turns	Nt	#	456	12	5	5
18	Thickness, inner thermal shield		m	0.0048	10	5	3
19	Thickness, inner cryostat	tv,i	m	0.0255	12	5	5
20	Outer radius, inner cryostat vessel	Rvi,o	m	9.1255	12	5	5
21	Inner radius, inner LN shield (avg)		m	9.295	12	5	5
22	Outer radius, inner LN shield (avg)		m	9.298	12	5	5
23	Inner radius, inner cond ground wrap		m	9.456	12	7	6
24	Inner radius, conductor		m	9.466	12	5	5
25	Mean radius, conductor		m	9.5	12	5	5
27	Outer rad, conductor		m	9.534	13	5	6
28	Inner radius, bobbin		m	9.544	13	7	6
29	Outer radius, bobbin		m	9.62	13	5	6
30	Inner radius, outer LN shield (avg)		m	9.8	12	5	5
31	Outer radius, outer LN shield (avg)		m	9.803	12	5	5
32	Thickness, outer cryostat vessel	tv,o	m	0.0507	12	5	5
33	Inner radius, outer cryostat vessel	Rvo,i	m	10.0993	12	5	5
34	Overall outer radius (outside ribs)	Ro	m	10.9	12	5	5
35	Depth of outer ribs		m	0.8007	12	5	5
36	Number of coil/cryostat assemblies		#	2	11	5	1
37	Number of ribs per coil assembly		#	3	12	5	3
38	Thickness of cryostat vessel ends		m	0.0762	12	5	5
39	Actual axial winding length per assembly		m	14.25	12	5	5
40	Central membrane maximum z		m	0.025		5	5
41	Cryostat inner end minimum z		m	0.4	11	5	5
42	Cryostat inner end maximum z		m	0.4762	12	5	5
43	LN shield minimum z		m	0.562	12	5	5
44	Bobbin minimum z		m	0.656	12	5	5

45	Winding minimum z	m	0.75	12	5	5
46	Winding maximum z	m	15	12	5	5
47	Bobbin maximum z	m	15.094	12	5	5
48	LN shield maximum z	m	15.192	12	5	5
49	Cryostat outer end minimum z	m	15.323	12	5	5
50	Cryostat outer end maximum z	m	15.4	11	5	5
51	FFS minimum z	m	10	11	5	5
52	FFS maximum z	m	18	11	5	5
52	FFS included angle	deg	17.4	11	5	5
53	FFS notch minimum z	m	16.5	13	7	6
54	FFS notch maximum z	m	18	13	7	6
55	FFS notch dia at minimum z	m	1.175	13	7	6
56	FFS notch dia at maximum z	m	1.251	13	7	6
57	FFS mass	t	899	12	5	5
58	FFS support mass	t	366	12	5	5
59	Axial force on Forward Field Shaper	MN	12.2	12	5	5
60	Axial force on conductor (each half)	MN	52	12	5	5
61	Mass of one muon sector	t	11.4	5	-	1
62	Number of central muon sectors per half	#	16	5	-	1
63	Radius of CG of central muon sectors	m	6.22	5	-	1
64	Z-location of CG of central muon sectors	m	3.89	5	-	1
65	Magnet axis height above hall floor	m	13		5	5

References

13 MIT Fax/B. Smith 3/20/92
12 Revised Layouts and calc's 3/6/92
11 Specification 3/92
10 J. Bowers/A. Posey/R. Yamamoto: revised layouts & calculations, 10/24/91
9 P Martson calculation 8/27/91
8 GCD - 000002 (7/25/91 version)
7 G. Deis notes, "Axial Force on Coil" 8/13/91
6 P Marston notes, 8/12/91
5 F. Nimblett estimates, 8/9/91
4 Obsolete
3 P. Marston calculation, per G. Deis
2 Obsolete
1 Second Detector EOI

Notes

7 new parameter
6 3/28/92 - Increased bobbin thickness to 3 in., othe corrections
5 3/6/92 - Values revised to adopt new baseline at 9.0m ID
4 10/24/91 - Values revised to reflect latest conceptual design for GEM cost estimate review to be held on 10/29/91.
3 8/28/91 - Values revised from Ref1 values, based on more detailed design and calc's by P Martson.
2 8/8/91 - Value revised from Ref1 value, based on more detailed design and calc's.
1 8/8/91 - Ref 1 actually shows 0.823T, and historical number is 0.83T.

Superconducting Super Collider

Magnetic Field Design/Forces

Peter Marston

Massachusetts Institute of Technology
Plasma Fusion Center
April 1, 1992

GEM MAGNET VENDOR BRIEFING

Magnetic Field Design	-	P. G. Marston
Coil/Winding Design	-	B. A. Smith
Conductor Design	-	J. V. Minervini
Forces/Stress/Structures	-	P. H. Titus

Magnet Parameters

Central Induction	0.8 T
Mean radius of windings	9.5 m
Coil length end-to-end (per half)	14.438 m
Conductor length (total)	27,219 m
Total mass of coil windings (per half)	153,000 kg
Total mass cold 4 K structure (per half)	520,000 kg
Operating current	50,200 A
Stored energy	2.5 GJ
Inductance	1.98 H
Total number of turns	456
Inner radius conductor	9.466 m
Mean radius conductor	9.500 m
Outer radius conductor	9.534 m
Inner radius of conductor inner ground wrap	9.456 m
Actual axial winding length per assembly	14.25 m
Axial force on flux concentrator	12.2 MN
Axial force on conductor (per half)	52 MN
Bobbin inner radius	9.544 m
Bobbin outer radius	9.620 m
Bobbin minimum z	0.656 m
Bobbin maximum z	15.094 m

Flux Concentrator Parameters

Flux concentrator minimum z	10 m
Flux concentrator maximum z	18 m
Flux concentrator included angle	17.4 degrees
Flux concentrator mass (per half)	899,000 kg
Flux concentrator support mass (per half)	366,000 kg
Flux concentrator notch minimum z	16.5 m
Flux concentrator notch maximum z	18 m
Flux concentrator notch diameter at minimum z	1.175 m
Flux concentrator notch diameter at maximum z	1.251 m

GEM MAGNET - Field Design

- Force on moving charged particle
- Curvature - Sagitta
- Momentum Resolution $\frac{\Delta P}{P} = \frac{\Delta S}{S}$

Performance Requirement for P = 500 GeV/c

$\frac{\Delta Pt}{Pt}$ @ $\eta = 0$ (90°) 5%

$\frac{\Delta Pt}{Pt}$ @ $\eta = 2.5$ (9.4°) 10%

$Pt = |P| \sin\theta$

$\eta = -\ln \arctan\left(\frac{\theta}{2}\right)$

θ = angle from beamline

Figure of Merit BL^2/σ_{eff}

B - Magnet

L - muon chamber array
s ~ 1 mm

σ_{eff} - Muon chambers must measure track to ~50 microns

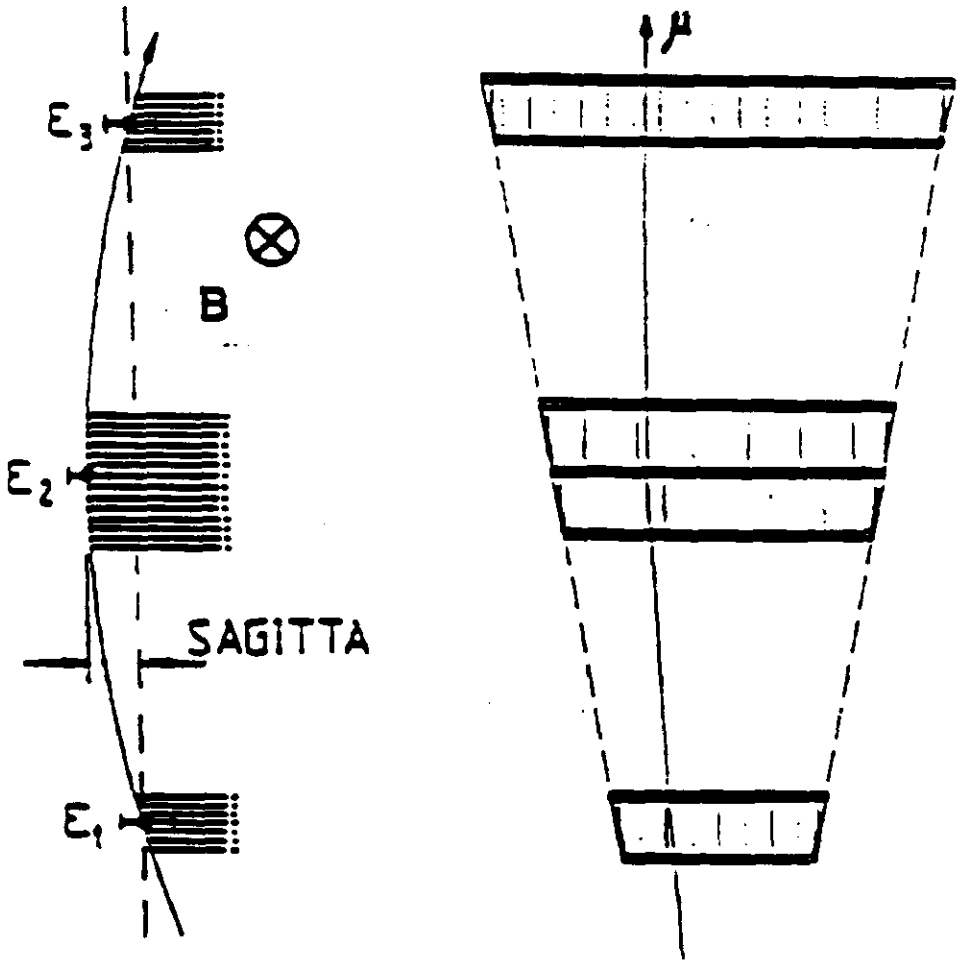

Sagitta measurement in one radial module of the central detector (B = magnetic field).

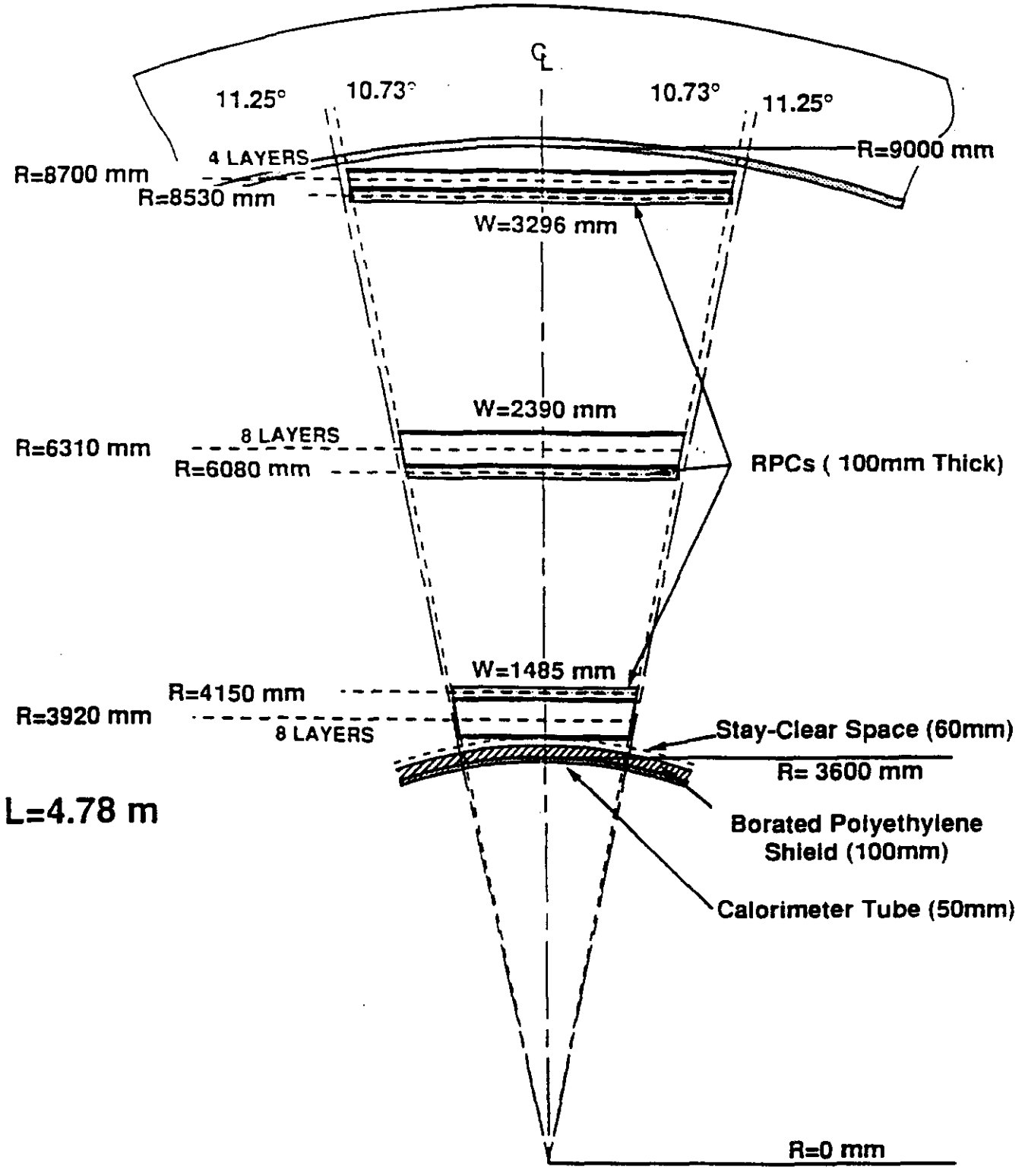

GEM BARREL REGION (PDT)

(Chamber Endview)

BASELINE

Fig. 3.2 b

Draper Laboratory		
GEM Muon System (endview)		
Drawn By:	F. Nimblett	Rev (-)
Dwg. No:	GMU0002	3/25/92
Approved by:		

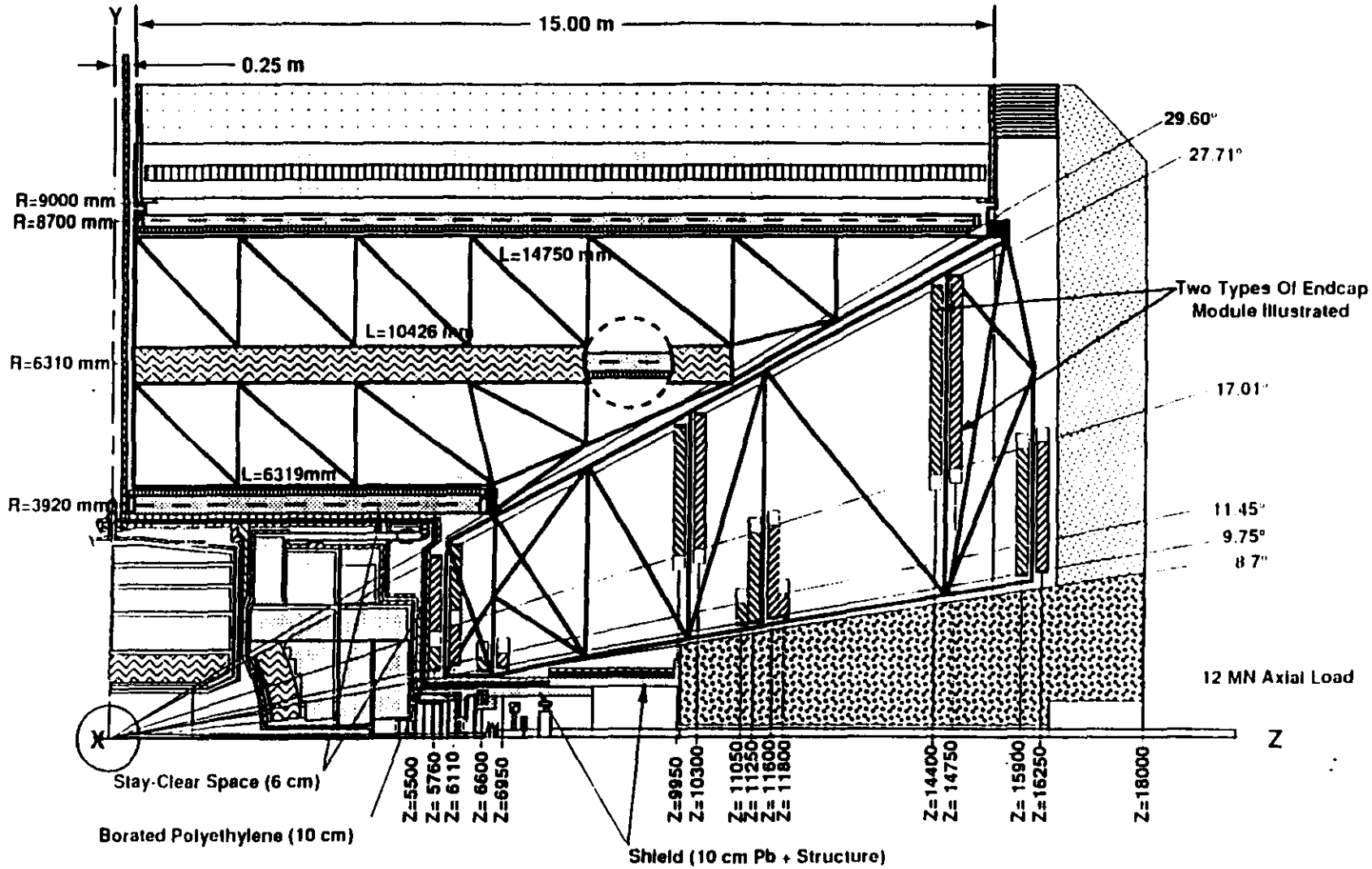

GEM MUON SYSTEM (BASELINE)

(4/8/4 layers for Theta = 9.75° to 11.45°)
With Baseline LAr Calorimeter Illustrated

Details of interface with the endcap muon system and the beampipe shield with the Forward Calorimeter remain unresolved

Fermilab Laboratory		
GEM Muon System (BASELINE) (LAr Calorimeter)		
Drawn By:	F. Nimblett	Rev (-)
Dwg. No:	GMU0012	3/27/92
Approved by:		

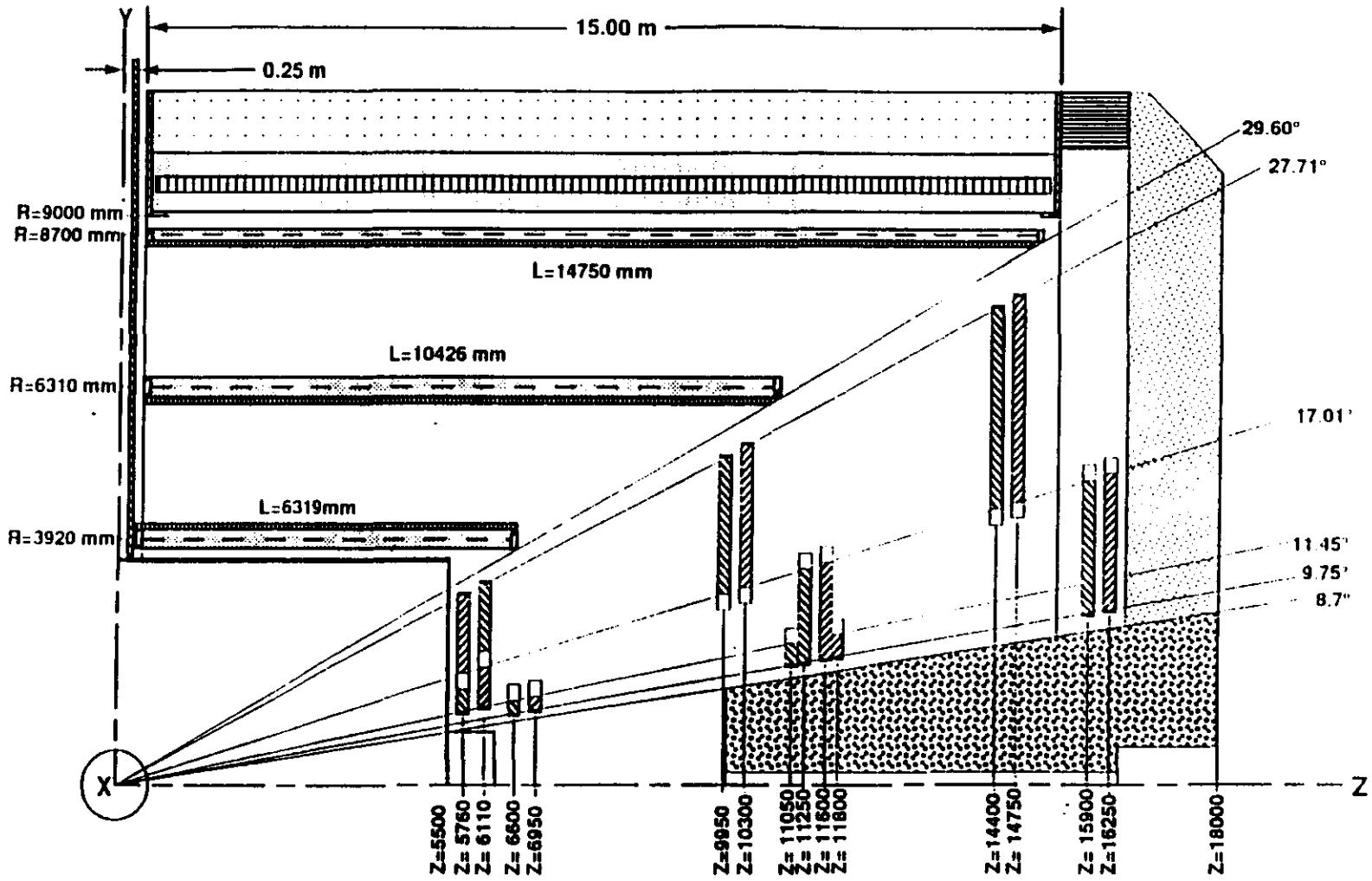

GEM MUON SYSTEM CHAMBER LAYOUT BASELINE

Fig. 3.2 a

Draper Laboratory	
GEM Muon System Chamber Layout	
Drawn By: F. Nimblett	Rev (-)
Dwg. No: GMU0010	3/27/92
Approved by:	

GEM Baseline 1, March 25, 1992

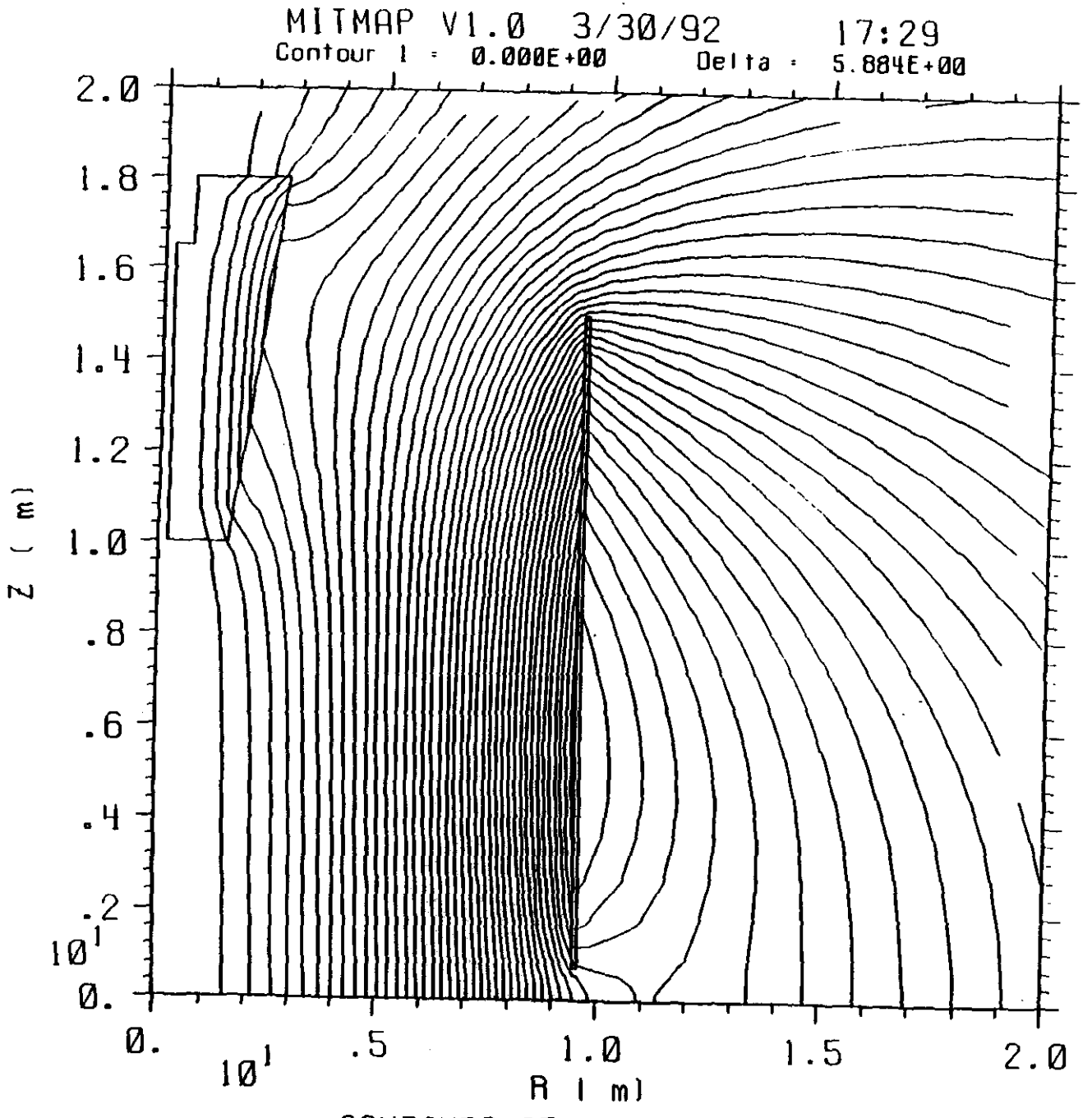

CONTOURS OF CONSTANT FLUX

Cumulative Axial Load (+ =>Tension, - => Compression) on Winding with No Bobbin vs. Axial Position, z (No Pole)

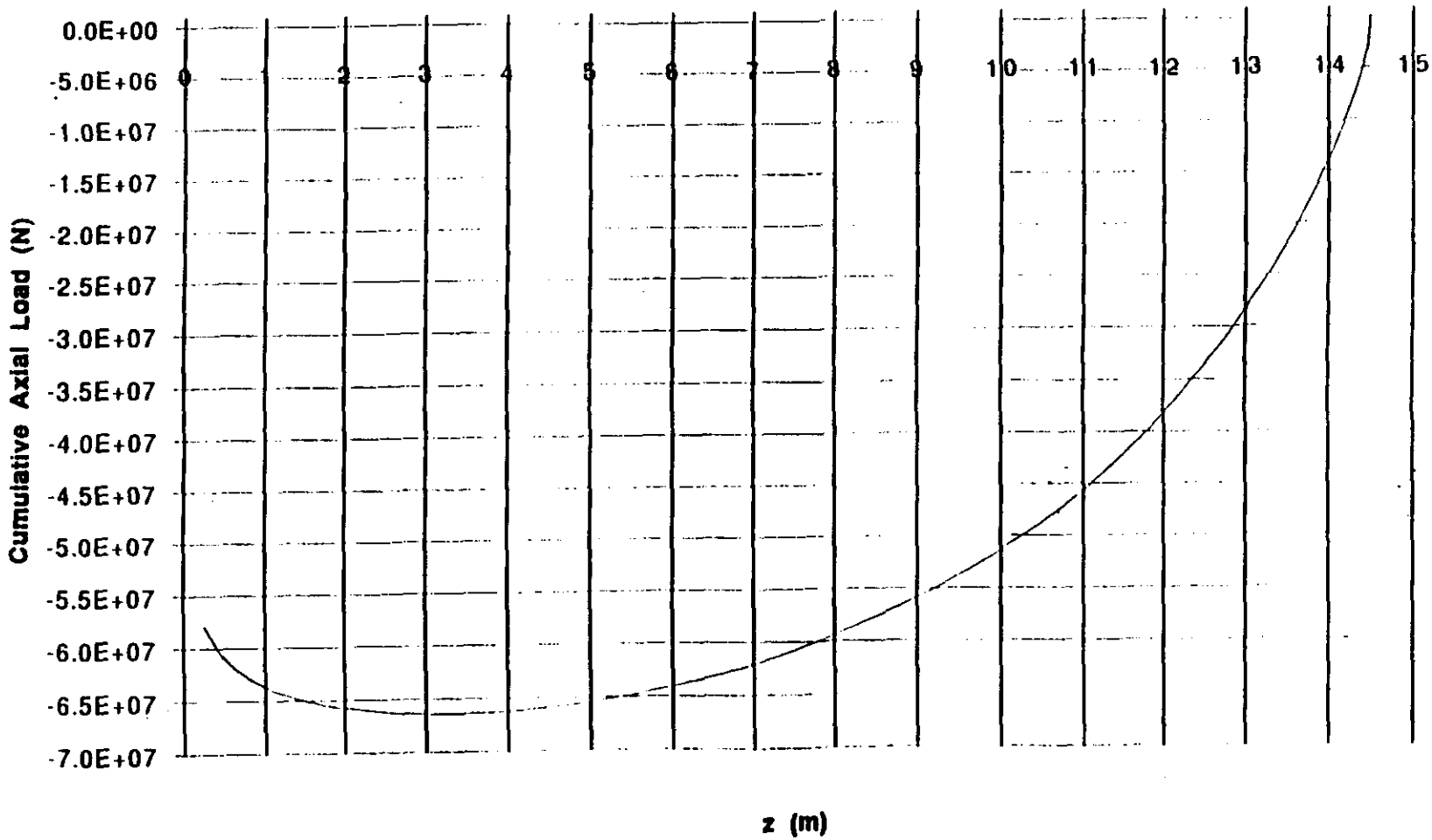

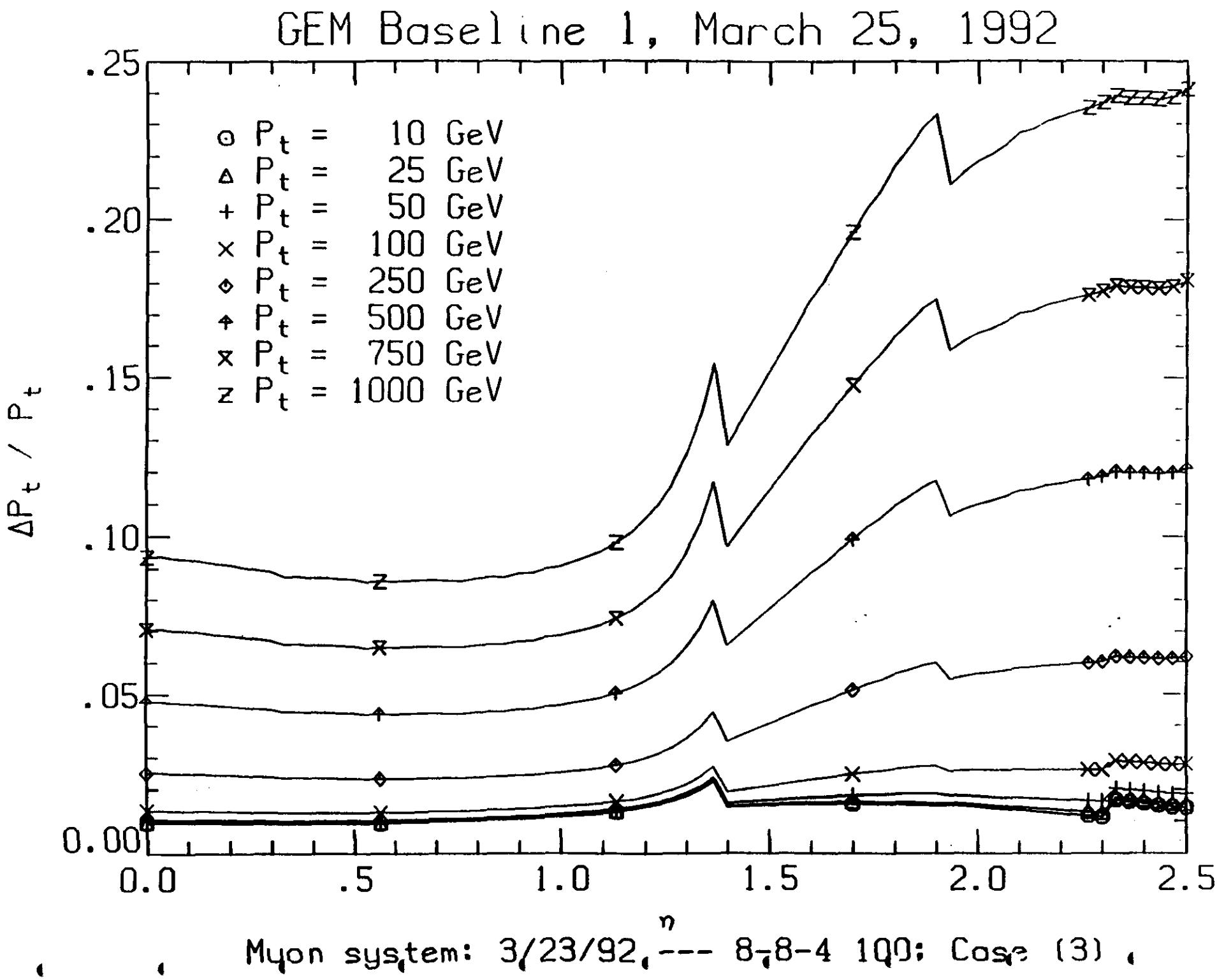
GEM Baseline 1, March 25, 1992
⊙ P_t = 10 GeV
△ P_t = 25 GeV
+ P_t = 50 GeV
× P_t = 100 GeV
◇ P_t = 250 GeV
↑ P_t = 500 GeV
⧖ P_t = 750 GeV
z P_t = 1000 GeV
$\Delta P_t / P_t$
.25
.20
.15
.10
.05
0.00
0.0
.5
1.0
1.5
2.0
2.5
η
Myon system: 3/23/92, --- 8-8-4 100: Case (3)

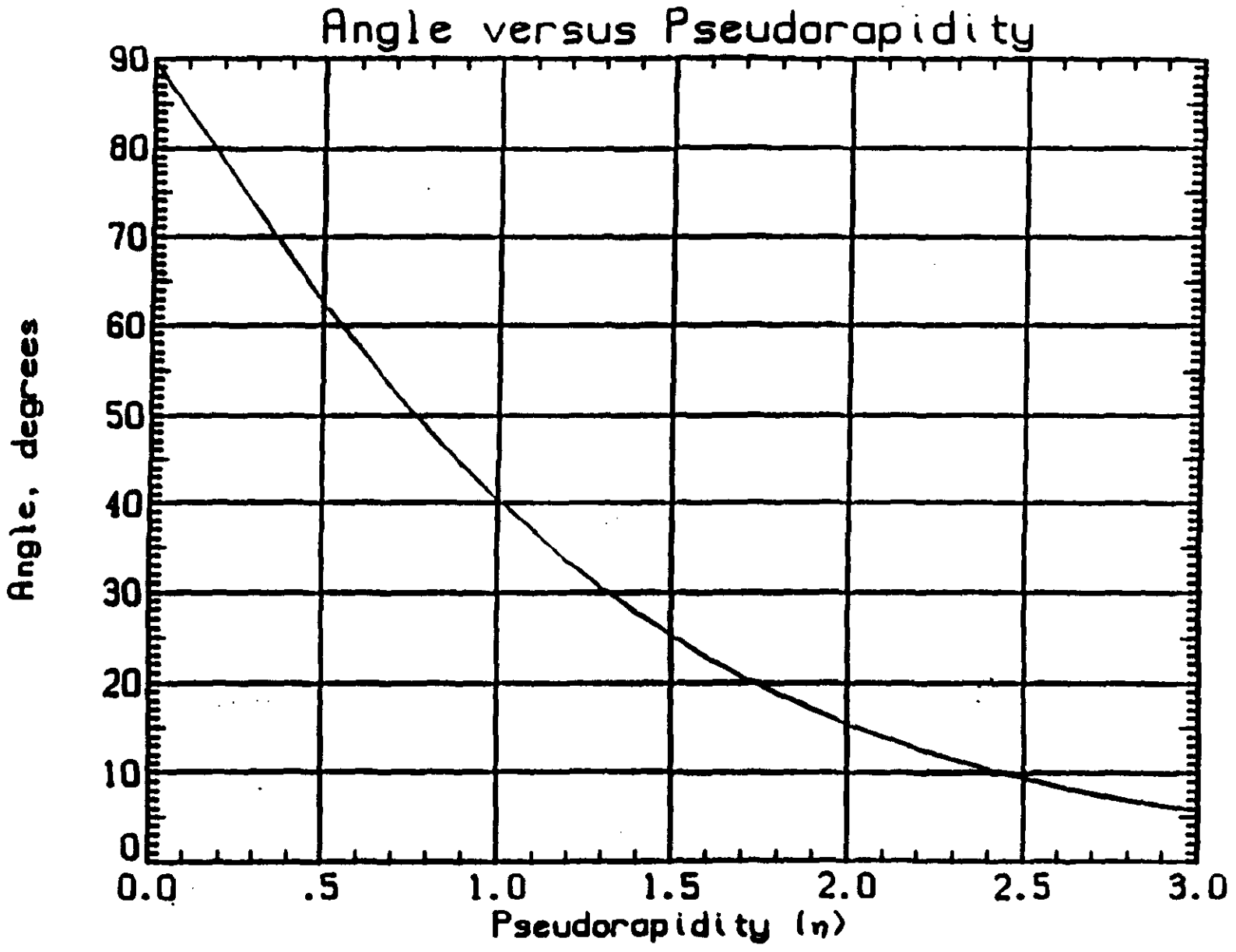

Reference curve: angle from the beamline versus pseudorapidity.

GEM Baseline 1, March 25, 1992

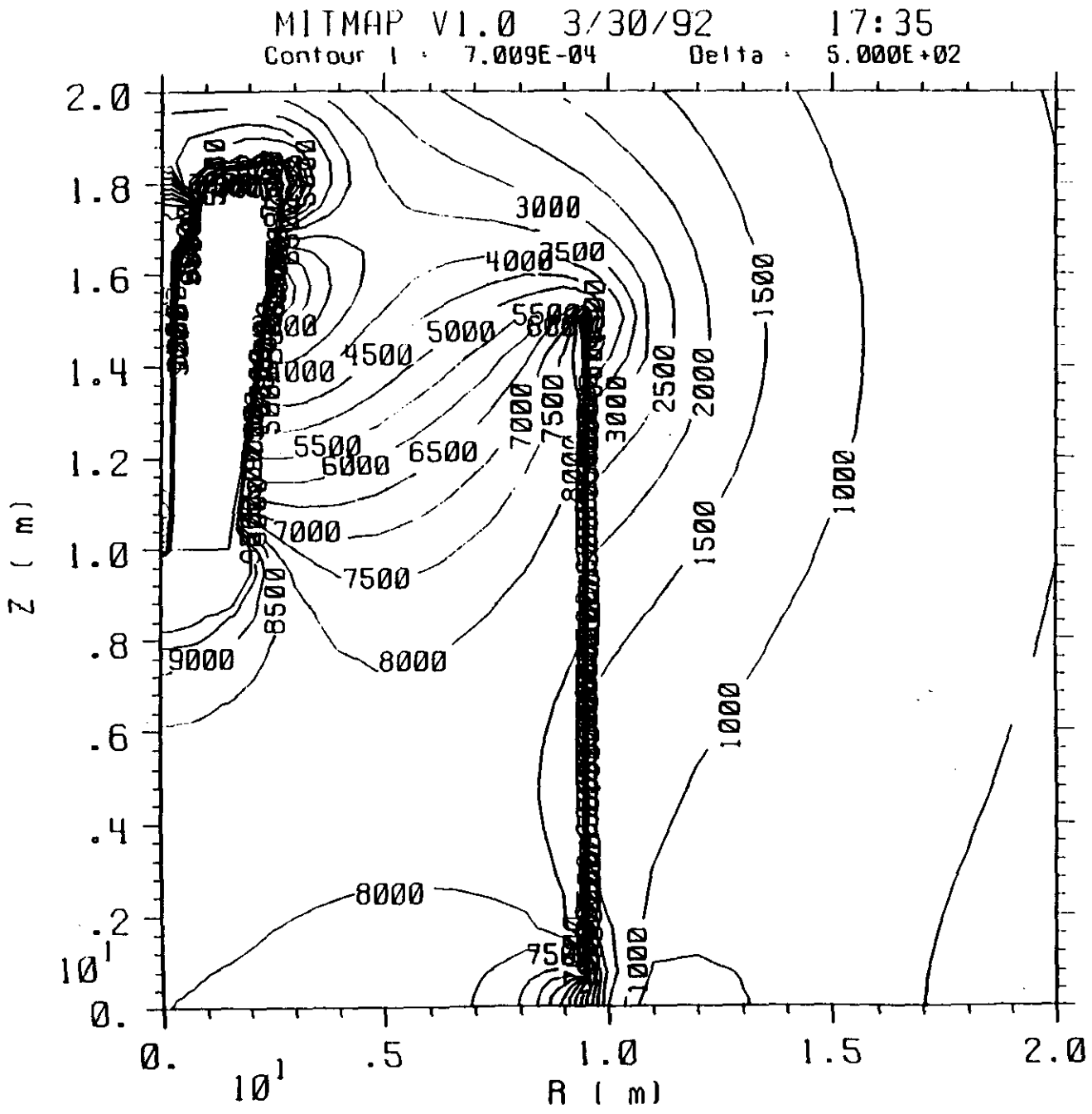

CONTOURS OF CONSTANT B

GEM Baseline 1, March 25, 1992

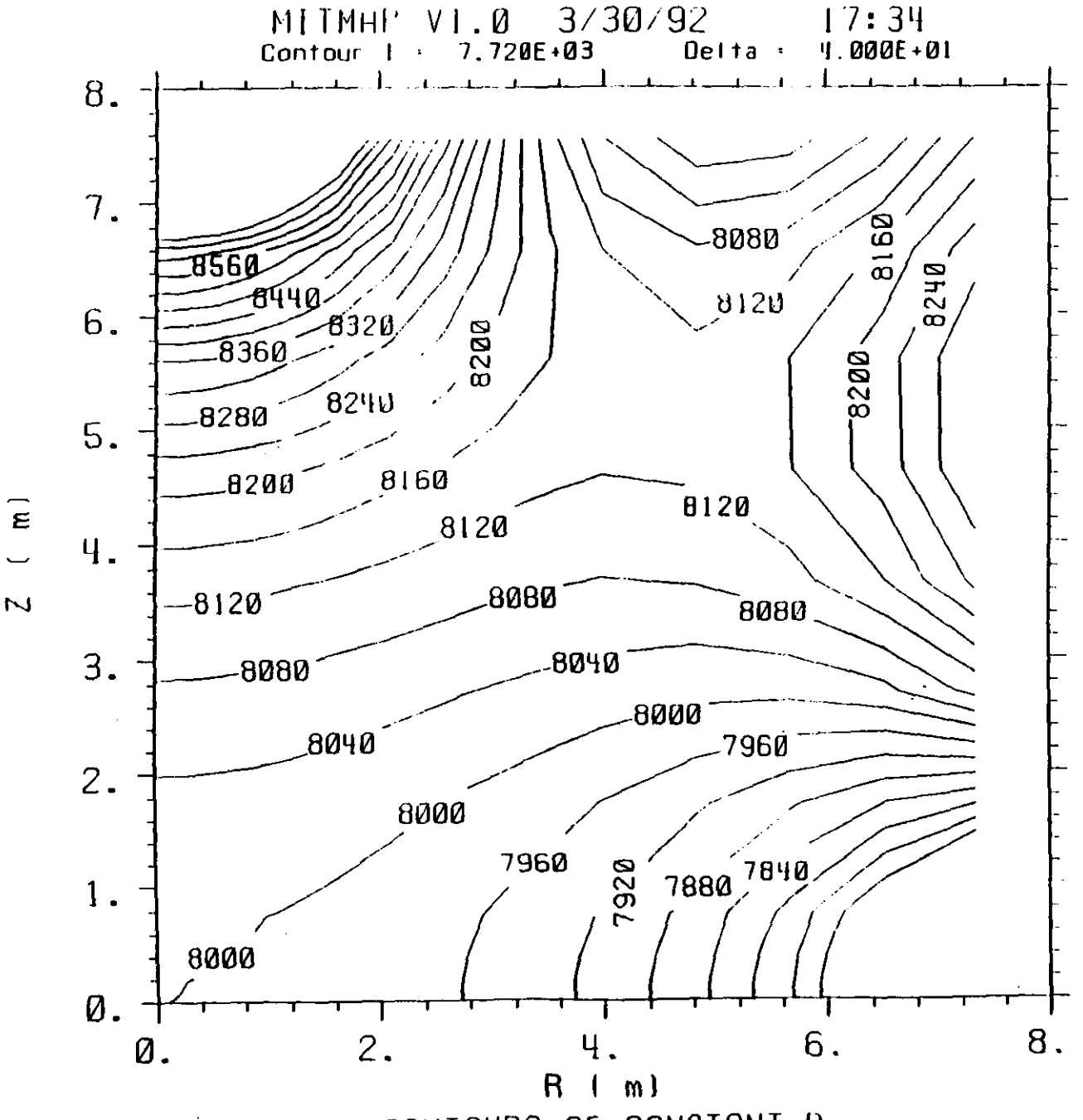

CONTOURS OF CONSTANT B

GEM Baseline 1, March 25, 1992

MITMAP V1.0 3/30/92 17:29

Variable Contour Increments

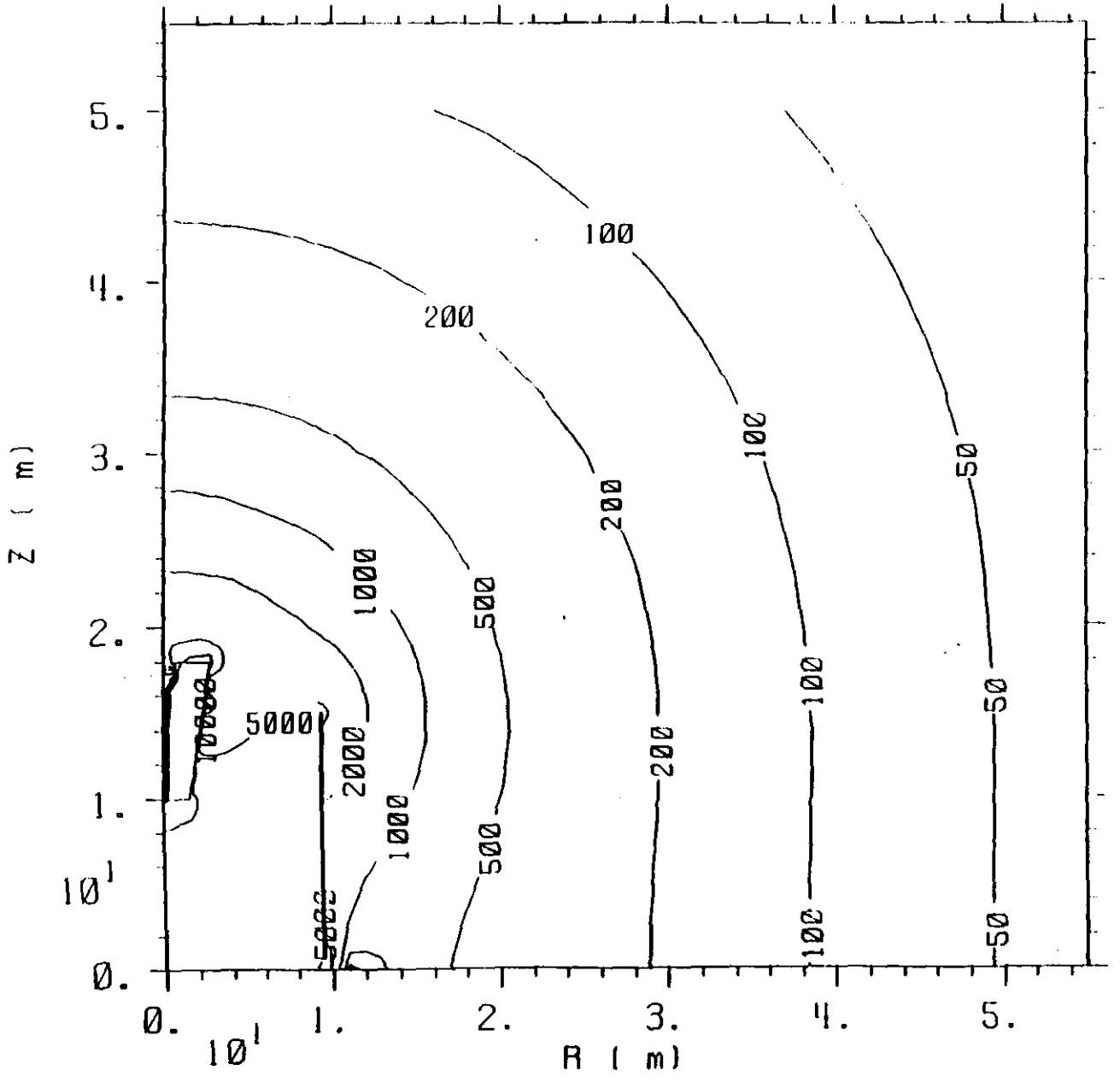

CONTOURS OF CONSTANT B

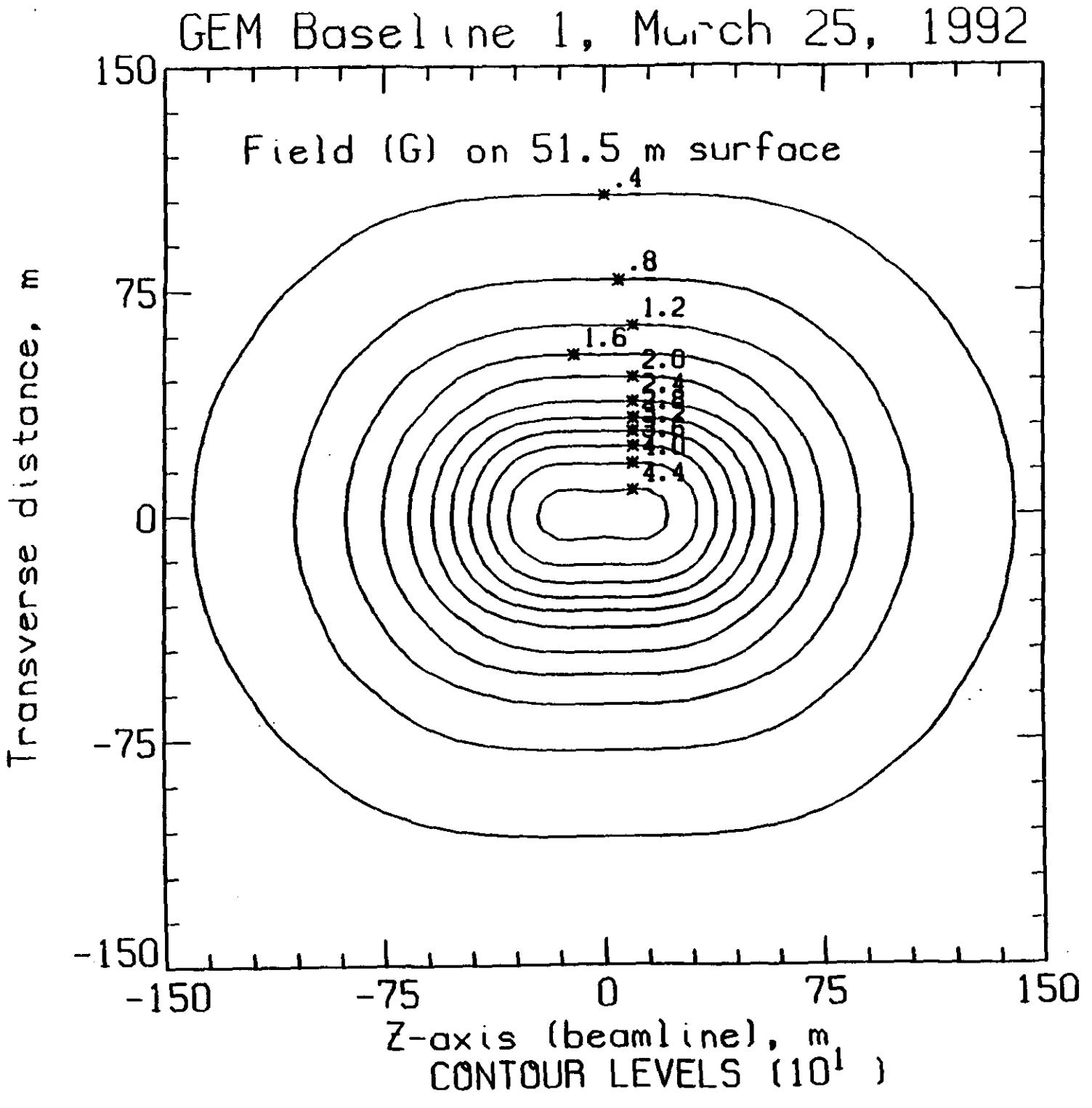
GEM Baseline 1, March 25, 1992
Field (G) on 51.5 m surface
.4
.8
1.2
1.6
2.0
2.4
2.8
3.2
3.6
4.0
4.4
150
75
0
-75
-150
-150
-75
0
75
150
Transverse distance, m
Z-axis (beamline), m
CONTOUR LEVELS (10^1)

Life in a Fringe Field

- Force on ferromagnetic bodies
  - Maxwell Stress Tensor
  - Dipole-Dipole interactions

  Body Force on dipole in gradient field

  $F = (M \cdot \nabla)\, B$

- Torque on dipole
  - Uniform or gradient field
  - Torque = M x B
- Force on current carrying element

  $F = I \times B$

- Induced currents - time varying field

  $\oint E = \frac{d\phi}{dt}$

  Eddy Currents
  Shorted turns
  Coupled conductive plates
  Circulating current - dipole

- Stability
  - Equilibrium
  - Unstable (equilibrium) dF/dS

- Safety/FMEA

- Effect on electronic and electromagnetic devices

- Shielding

  For EM sensitive equipment

- Working volume field perturbation from magnetized bodies, current elements etc.

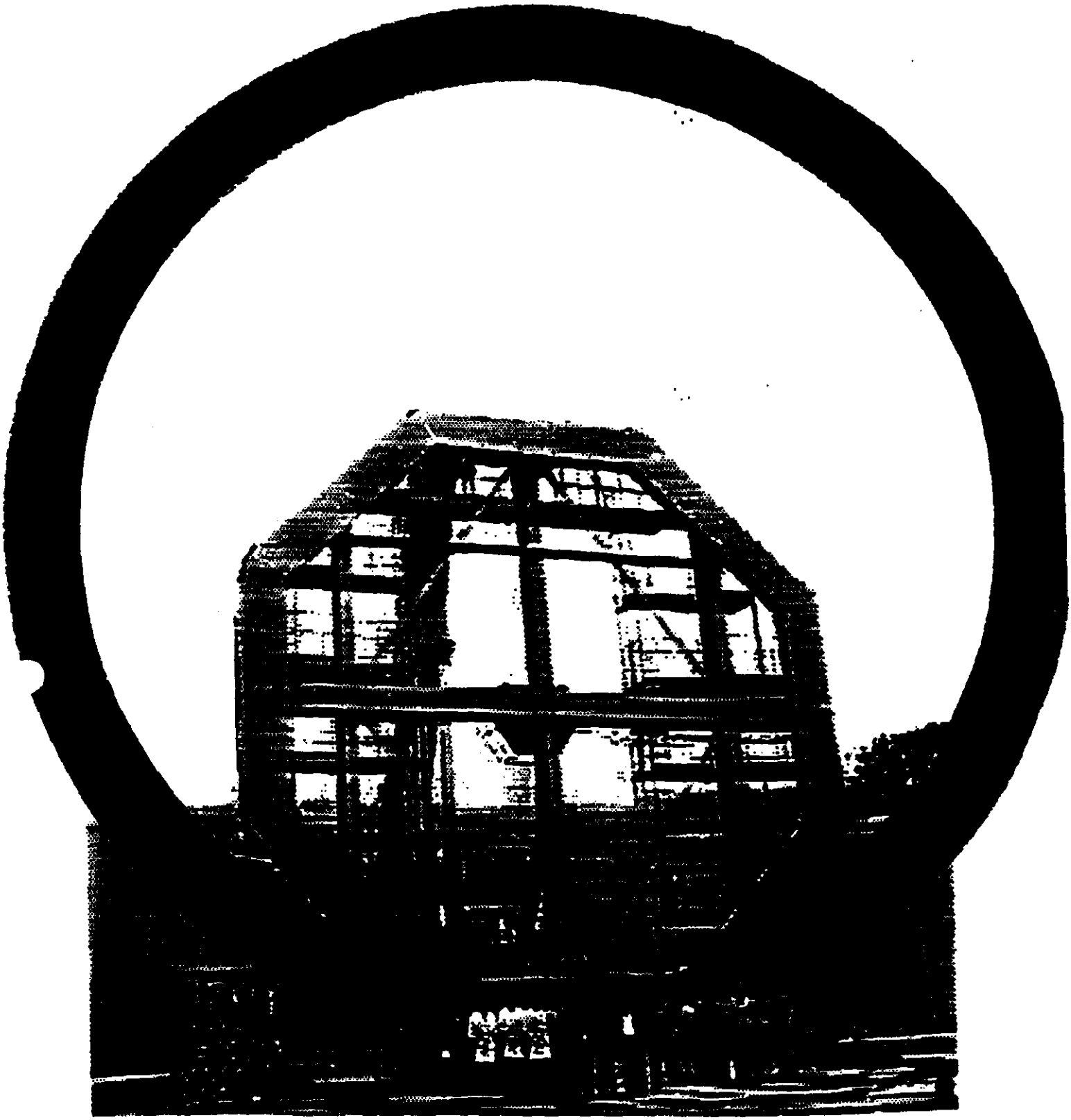

L3 - GEM Size Comparison

Superconducting Super Collider

Conductor Design

Joe Minervini

Massachusetts Institute of Technology
Plasma Fusion Center
April 1, 1992

Different types of conductors for the GEM magnet

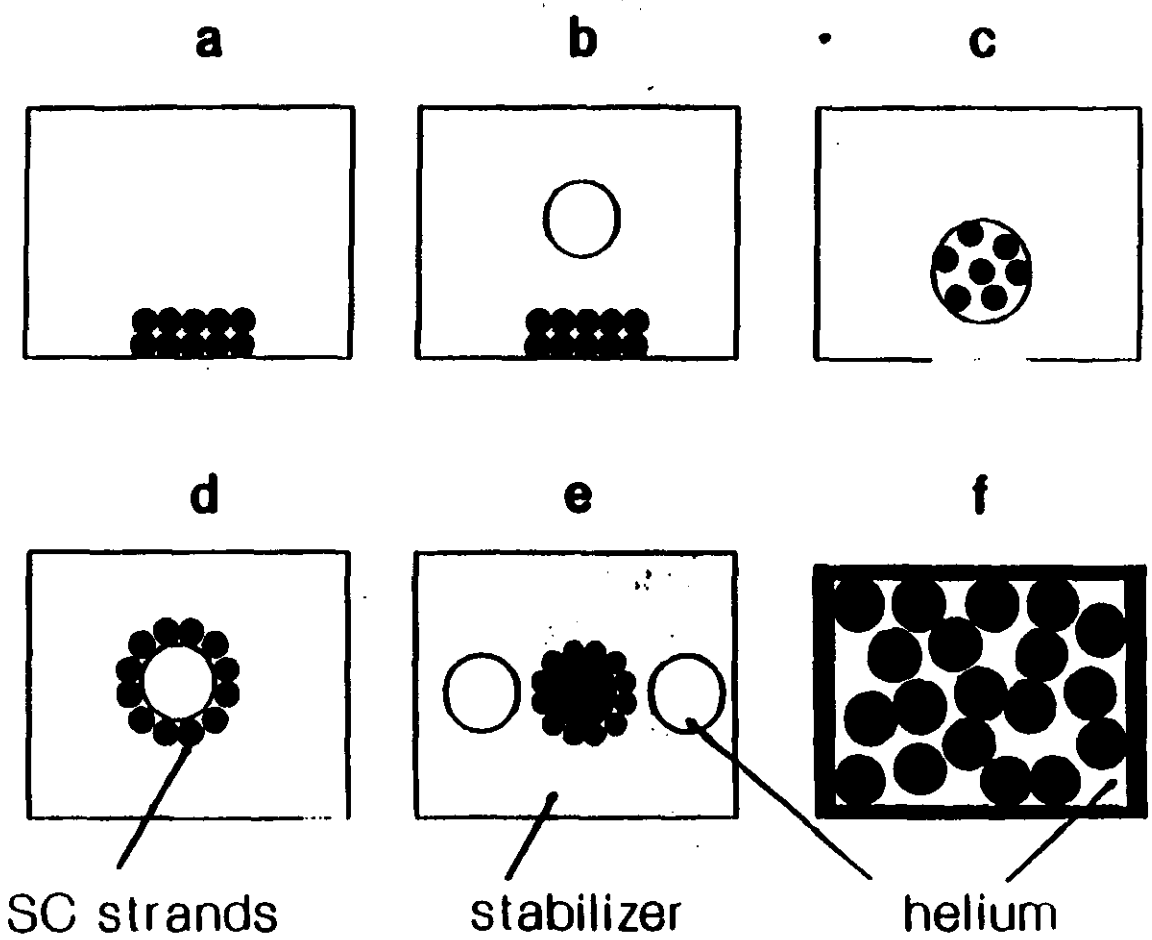

CONDUCTOR DESIGN OPTIONS CONSIDERED IN DETAIL

Indirectly Cooled
20 kA

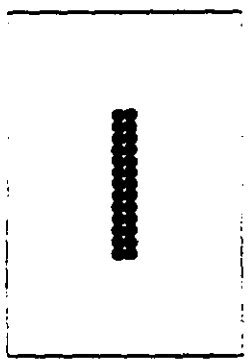

Cable-in-Conduit
50 kA

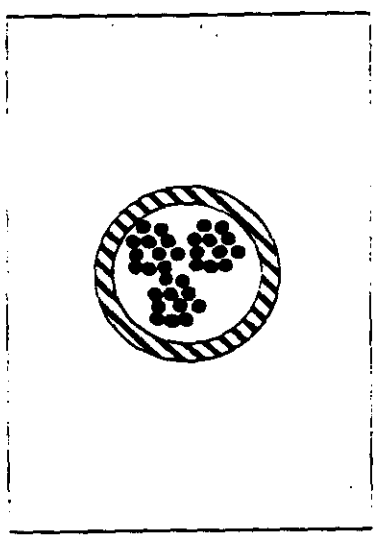

- Indirectly cooled design by Rutherford Appleton Laboratory
- Cable-in-Conduit design by MIT/Plasma Fusion Center
- in collaboration with Kurchatov Institute

CONDUCTOR REQUIREMENTS

Central Field (T)	0.8
Nominal Field at Winding (T)	1.1
Peak Field at Winding (T)	1.6
Operating Temperature (K)	4.5
Operating Current (kA)	20-50
Maximum Hotspot Temp. (K)	100
Maximum Dump Voltage (V)	1000
Number Charge/Discharge Cycles	200
Charging Time (Hr)	8
Number Thermal Cycles RT/4.5K	200

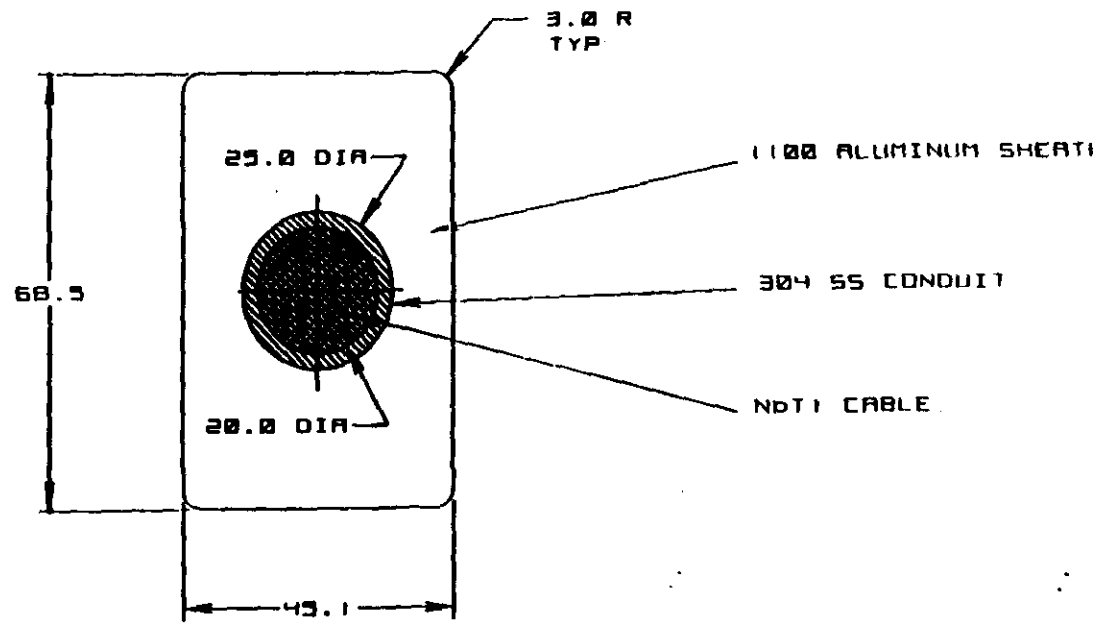

GEM MAGNET CONDUCTOR

BASELINE CONFIGURATION

(DIMENSIONS IN mm)

DESIGN BASIS

- Cable-in-Conduit Conductor

- NbTi Cable - Stainless Steel Conduit

- Aluminum Sheath for Quench Protection
  - relatively low RRR ~14

- Two independent coil halves
  - two sets of current leads
  - 12 modules per magnet half
  - [redacted] m conductor length/module
  - 1134 Coil diameter is 19 m - each turn is 60 m
  - [redacted] m total conductor length
  - 27,219

BASELINE CONCEPTS

- ❑ Type 304 stainless steel conduit
- ❑ Vent each coil at [redacted] m intervals 1134
- ❑ Resistive joints
  - Independently cool each joint
  - Pre-fabricated on each 1150m length at conductor factory
  - fully leak tested at factory
  - Bolted and soft soldered at coil assembly site
  - Simple, easily tested close-out welds in cooling tubes

CONFIGURATION

STRAND

Diameter = 0.73 mm
Cu:SC = 3:1
Superconductor = NbTi
RRR = 150-200
Filament size $\leq$ 40 μm
Twist = TBD
Total length = 13,000 km
Total weight = 45,400 kg

CABLE

4 Stage, twisted
3 x 5 x 5 x 6
450 strands
0.05 mm x 11 mm wide type 304 SS tape - spiral wrap/50%

Stage	Element	Strands	Twist Pitch (mm)	Diameter (mm)
1	Triplet	3	25	1.46
2	(5 x 3)	15	64	3.6
3	(5 x 5 x 3)	45	175	8.05
4	(6 x 5 x 5 x 3)	450	320	19.7

Total length = 24 x 1150 m piece length (27.6 km)
Cable weight/piece = 1890 kg

CONDUIT

Material = Type 304 stainless steel
ID = 20.0 mm
OD = 25.0 mm
Manufactured by continuous seam weld by TIG on tube-mill
Conduit weight = 42,400 kg total
= 1770 kg/conductor length

SHEATH

Material = Type 1100 Aluminum
RRR = 14 minimum after assembly
Dimensions = 45.1 mm x 68.5 mm in two halves (2 x 22.55 mm)
Manufactured by continuous conform extrusion
Piece length = 2 x 1150 m/coil
Total length = 2 x 27,600 m
Total weight = 190,000 kg

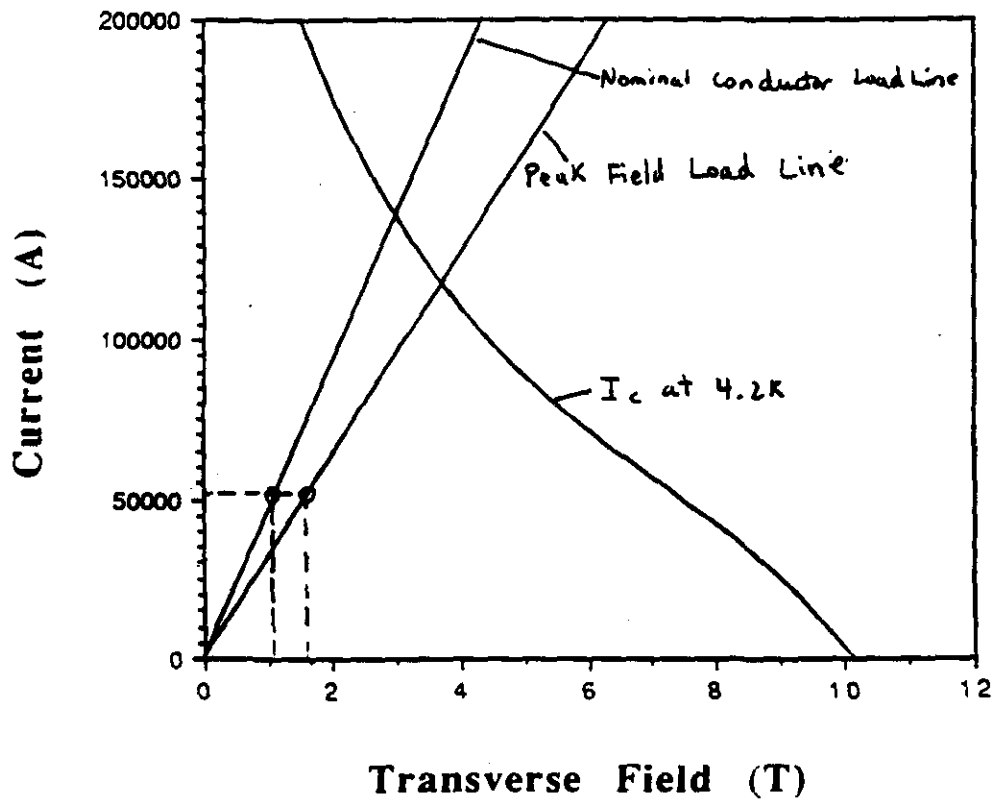
200000
150000
100000
50000
0
Current (A)
0
2
4
6
8
10
12
Transverse Field (T)
Nominal conductor Load Line
Peak Field Load Line
I_c at 4.2K

SUMMARY OF OPERATING PERFORMANCE

Maximum Field (T)	1.1-1.6
Operating Current (kA)	50.2
Operating Temperature (K)	4.5
Operating Pressure (Bar)	3-5
Critical Current (kA)	222.8
Fraction of Critical Current	0.225
Critical Temperature (K)	8.89
Current Sharing Temperature (K)	7.90
Temperature Margin (K)	3.4
Limiting Current for Stability (kA)	64.0
Energy Margin - Internal Disturbances (J/m)	250
Energy Margin - External Disturbances (J/m)	315
Quench	
Maximum Dump Voltage (kV)	1.0
Dump Time Constant (s)	99.6
Hot Spot Temperature (1 s delay) (K)	100
Max Hot Spot Pressure (Bar)	340-445

Conductor Manufacturing

- Strand
  - Inspection
  - Acceptance Tests
- Multistage Cable
  - Inspection
- Encapsulate in Steel Conduit by Tube-Mill
  - Inspection
  - Leak Test
- Terminate With Joints
  - Inspection
  - Leak Test
- Enclose in Aluminum Sheath
  - Inspection

GEM

US-DPC example

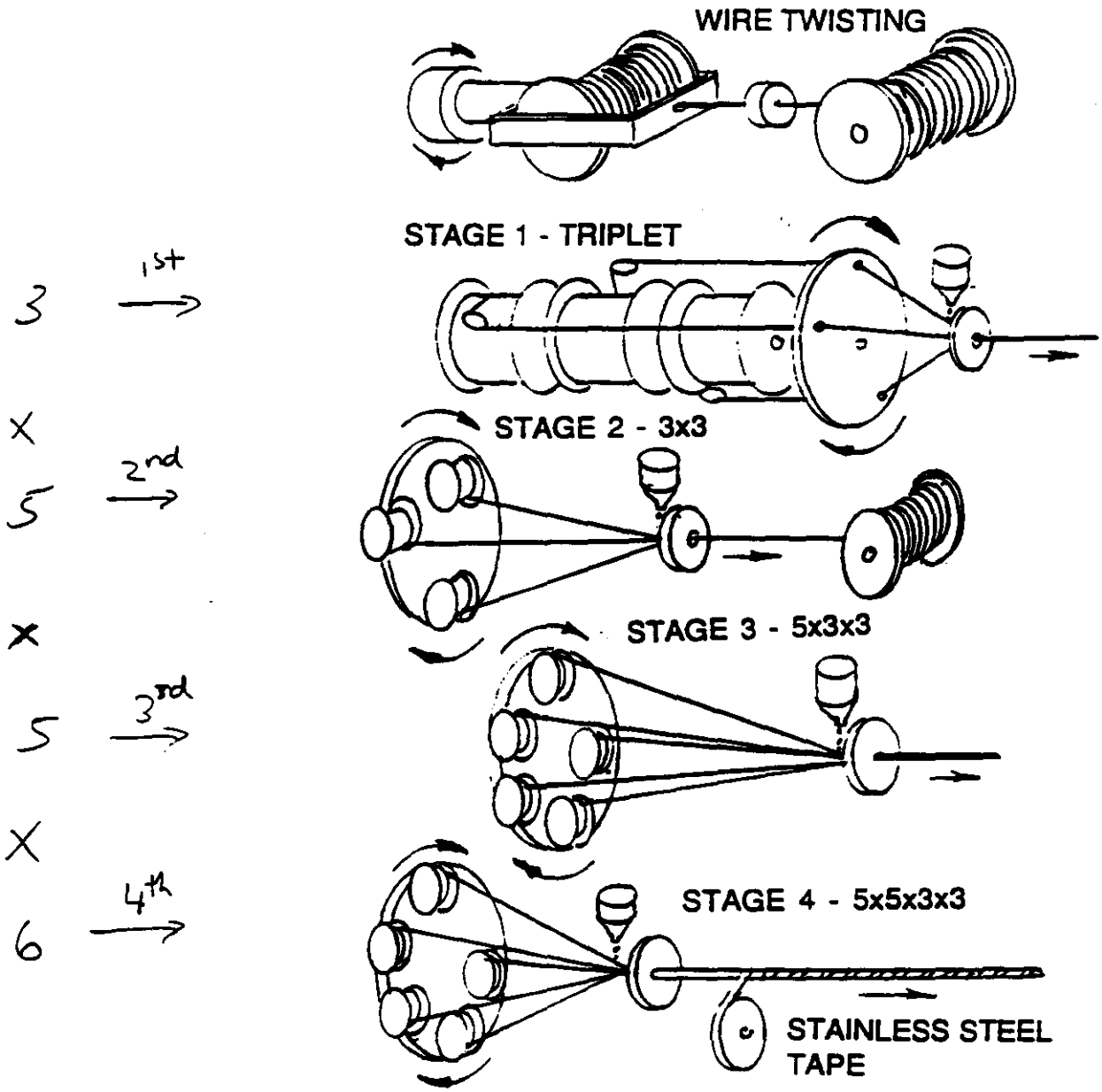

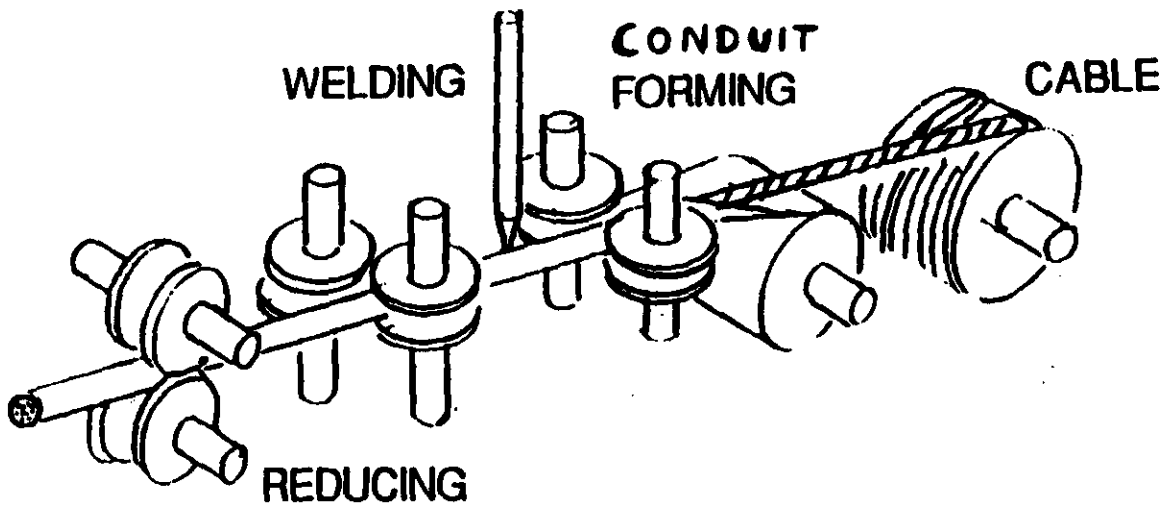
WELDING
CONDUIT
FORMING
CABLE
REDUCING

ALUMINUM SHEATH EXTRUSION METHODS

A) Con-Form Extrusion

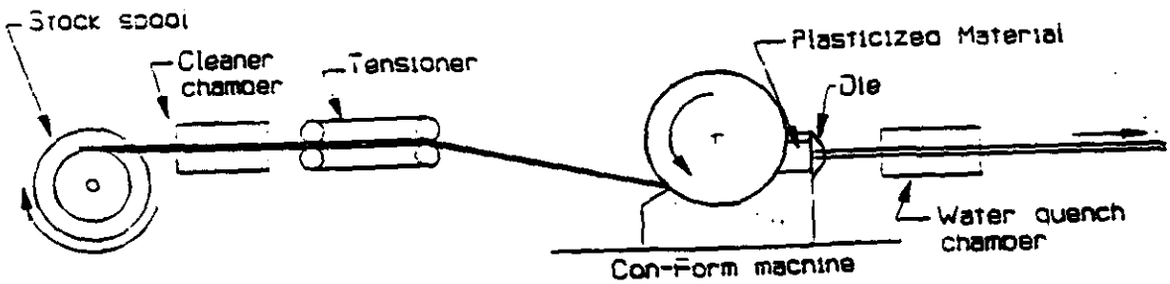

B) Co-Extrusion

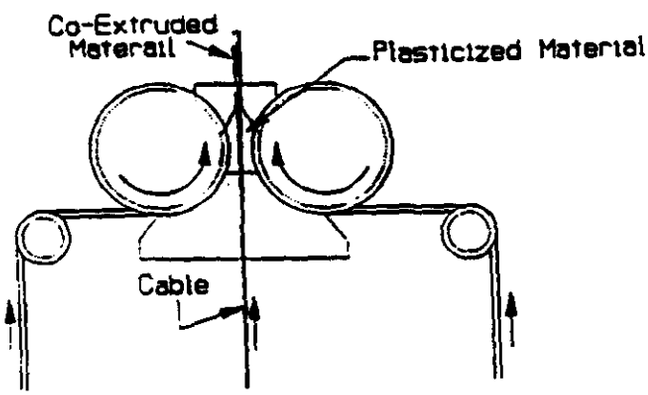

Co-Extrusion Machine

C) Tandem Extrusion or Die Stop

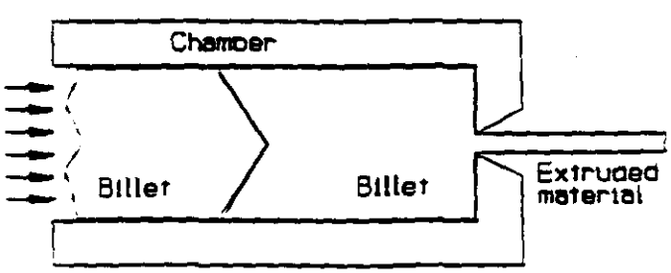

Tandem Extrusion
(die stop)

Superconducting Super Collider

Coil Design

Brad Smith

Massachusetts Institute of Technology
Plasma Fusion Center

April 1, 1992

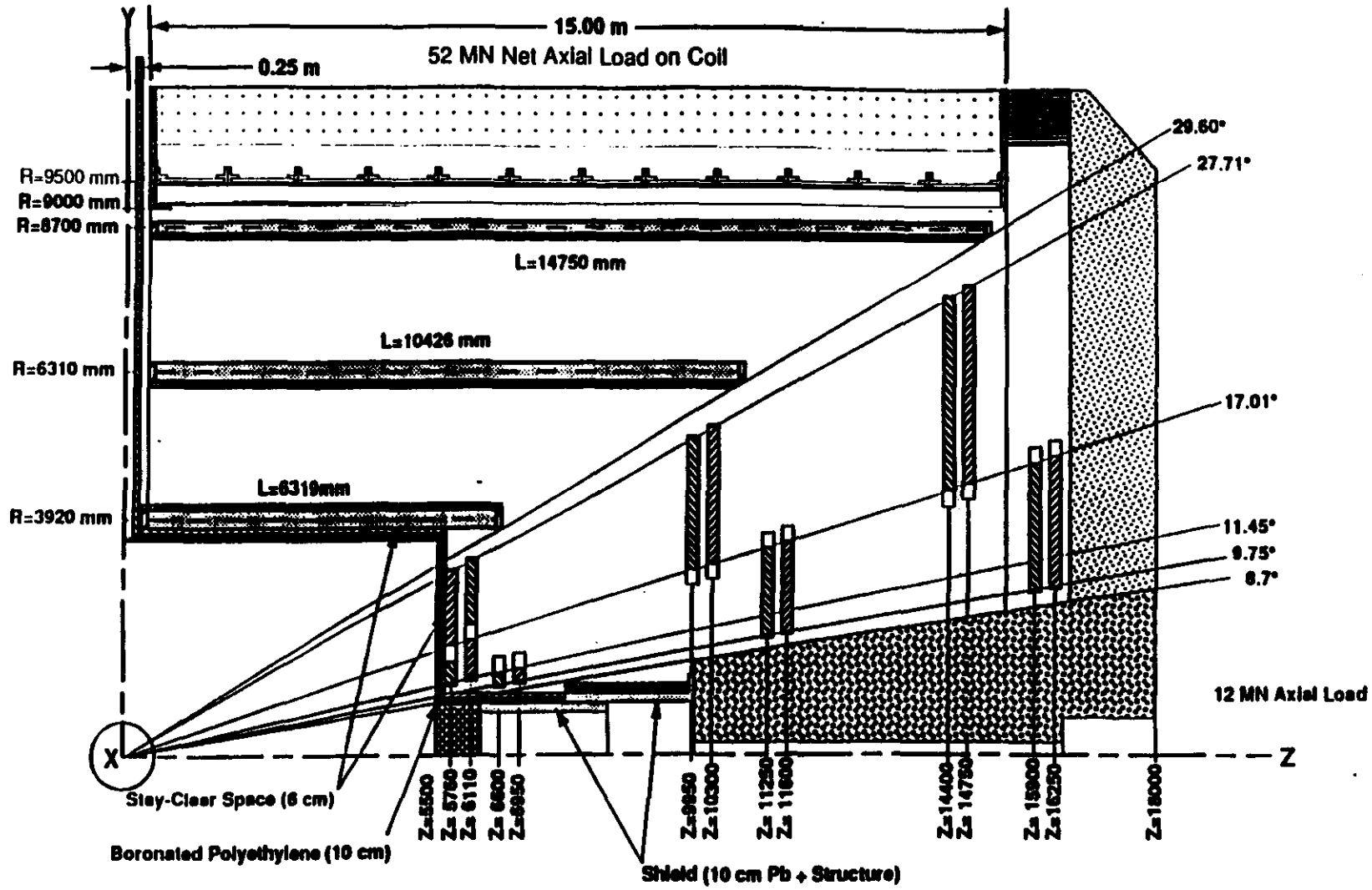

GEM Magnet and Muon System Layout

F. Nimblett
Draper Lab.
GEM920319

modified by MIT

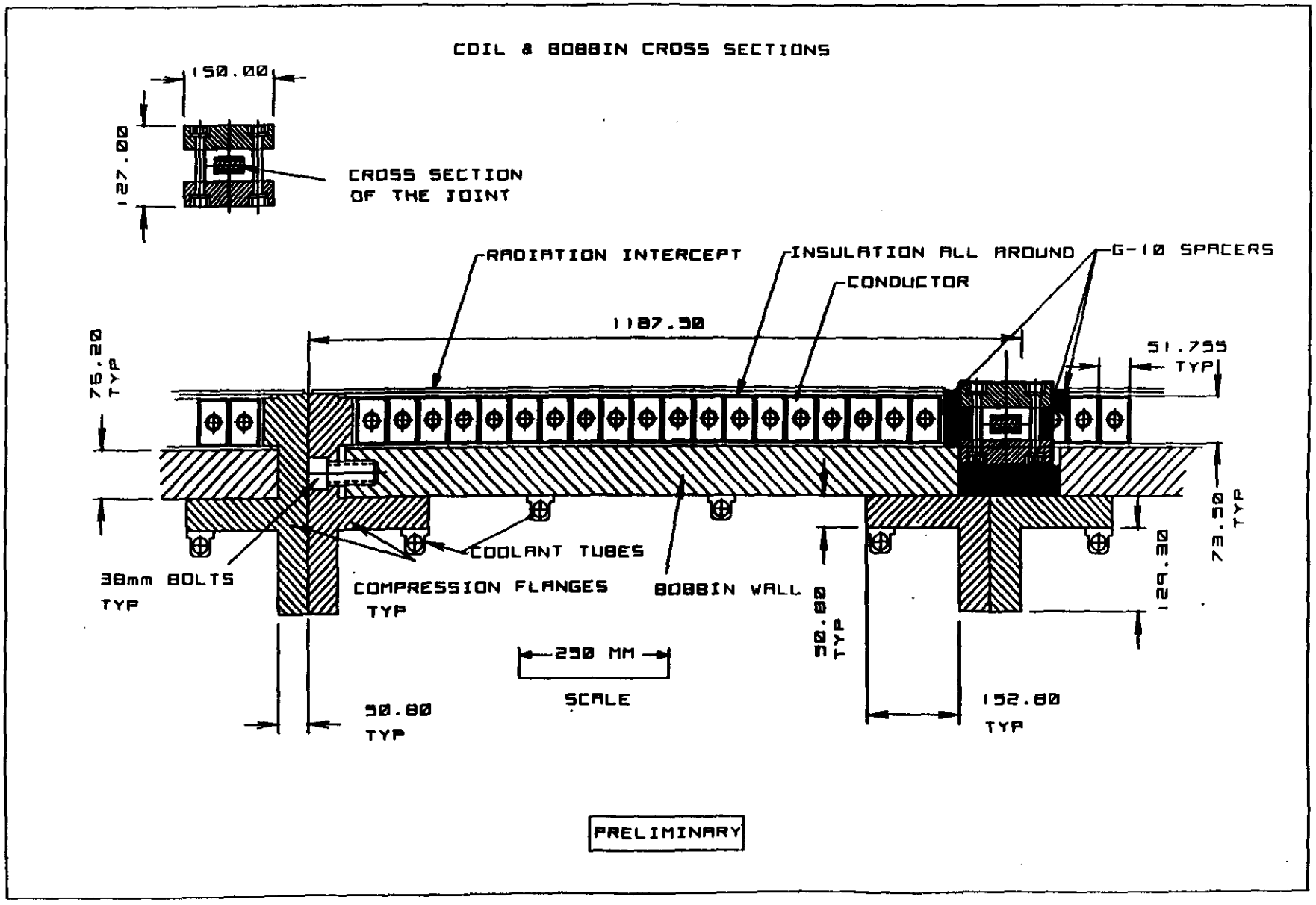
COIL & BOBBIN CROSS SECTIONS
150.00
127.00
CROSS SECTION
OF THE JOINT
RADIATION INTERCEPT
INSULATION ALL AROUND
G-10 SPACERS
CONDUCTOR
1187.50
51.755
TYP
76.20
TYP
73.50
TYP
129.30
50.80
TYP
38mm BOLTS
TYP
COMPRESSION FLANGES
TYP
COOLANT TUBES
BOBBIN WALL
250 MM
SCALE
50.80
TYP
152.80
TYP
PRELIMINARY

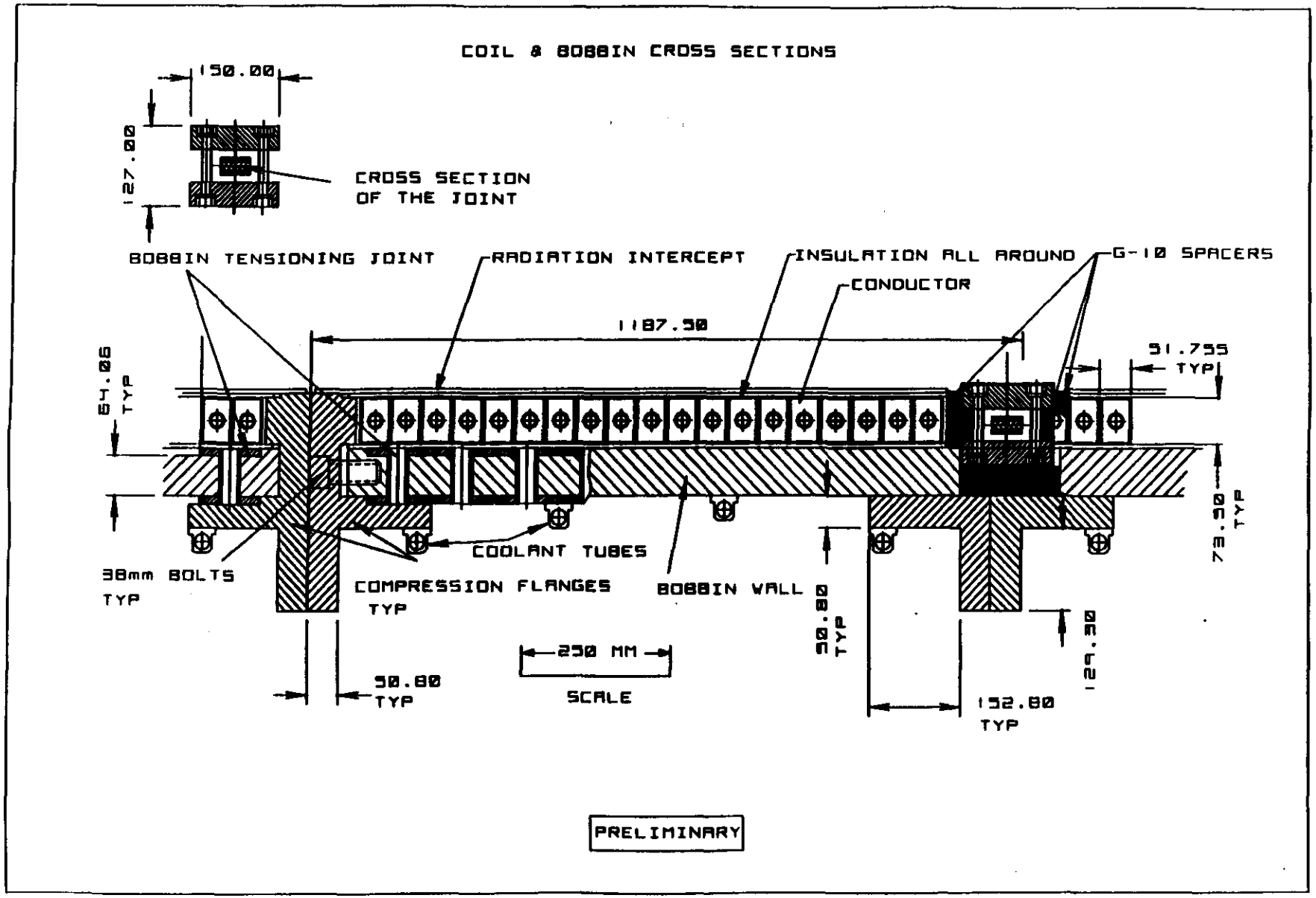
COIL & BOBBIN CROSS SECTIONS
150.00
127.00
CROSS SECTION
OF THE JOINT
BOBBIN TENSIONING JOINT
RADIATION INTERCEPT
INSULATION ALL AROUND
CONDUCTOR
G-10 SPACERS
1187.50
51.755
TYP
64.06
TYP
73.50
TYP
COOLANT TUBES
38mm BOLTS
TYP
COMPRESSION FLANGES
TYP
BOBBIN WALL
50.80
TYP
126.30
250 MM
SCALE
50.80
TYP
152.80
TYP
PRELIMINARY

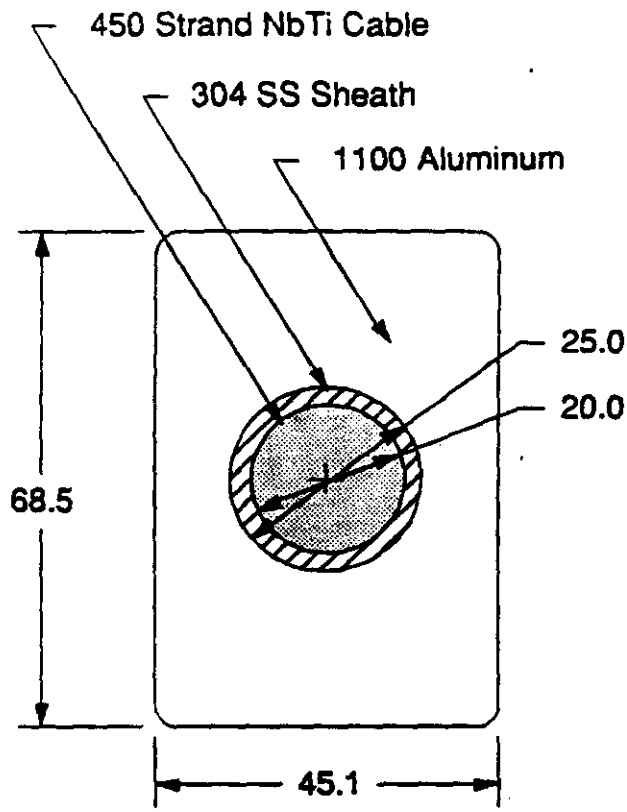

GEM Magnet Conductor

Sheath Material	Aluminum Alloy 1100
RRR	14
Hole Diameter (mm)	25.0
Width (mm)	45.1
Height (mm)	68.5
Corner Radii (mm)	3.0
Conduit Material	Type 304 SS
Outer Diameter (mm)	25.0
Inner Diameter (mm)	20.0
Cable	
Cable Pattern	3x5x5x6
Strand Diamter (mm)	0.73
Cu:Non-Cu	3
Number of Strands	450
Operating Current (A)	50,000

Winding Structure

Preliminary

Bobbin

Functions

- -Support for coil hoop stress
- -Carries axial electromagnetic load
- -Provides indirect cooling to winding via thermosiphon loops

Fabrication

- -High strength Al (6061) plate, 3" thick
- -Rolled to radius and but welded to form quadrants off-site

Flanges

Functions

- -Induce axial prestress in winding to 4.3 MN/radian
- -Provides module-to-module mechanical connection (bolts)
- -Provides load path through axial and radius rods to cryostat
- -Shunts thermal radiation load from bore

Fabrication

- -Welded from high strength (6061) plate, 2" thick
- -Fabricated in quadrants off-site
- -Other forming techniques being evaluated

Bobbin Tensioning Joint

Functions

- -Tensions bobbin around coil
- - Provides azimuthal insulating break in bobbin (may not be necessary)

Fabrication

- -Machined 304 stainless
- -High strength 1.5" dia bolts
- -G-10 insulating pins and sleeves

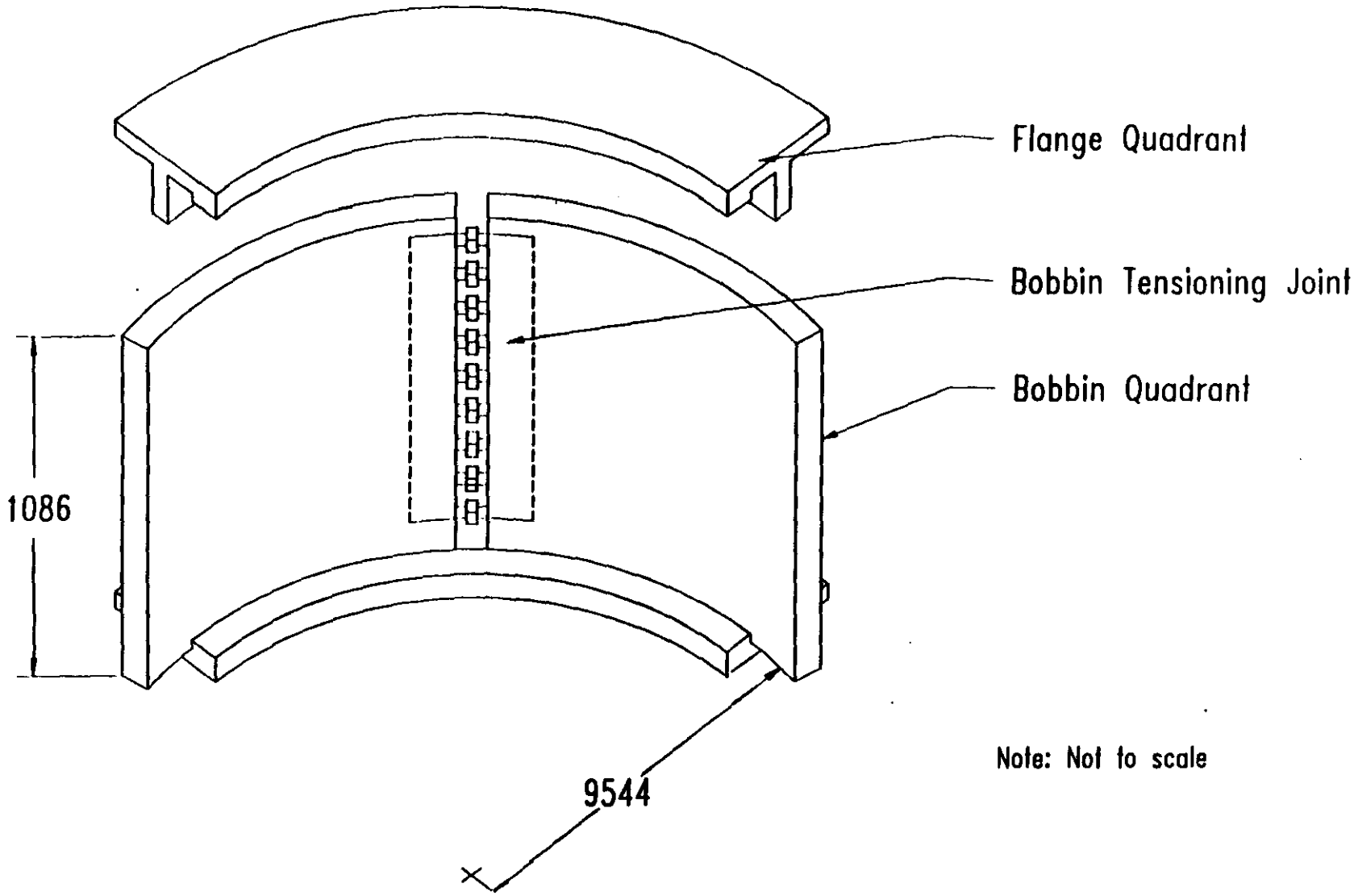

Coil Module Structural Support

Radial Field Component at the Winding Due to Coil Alone

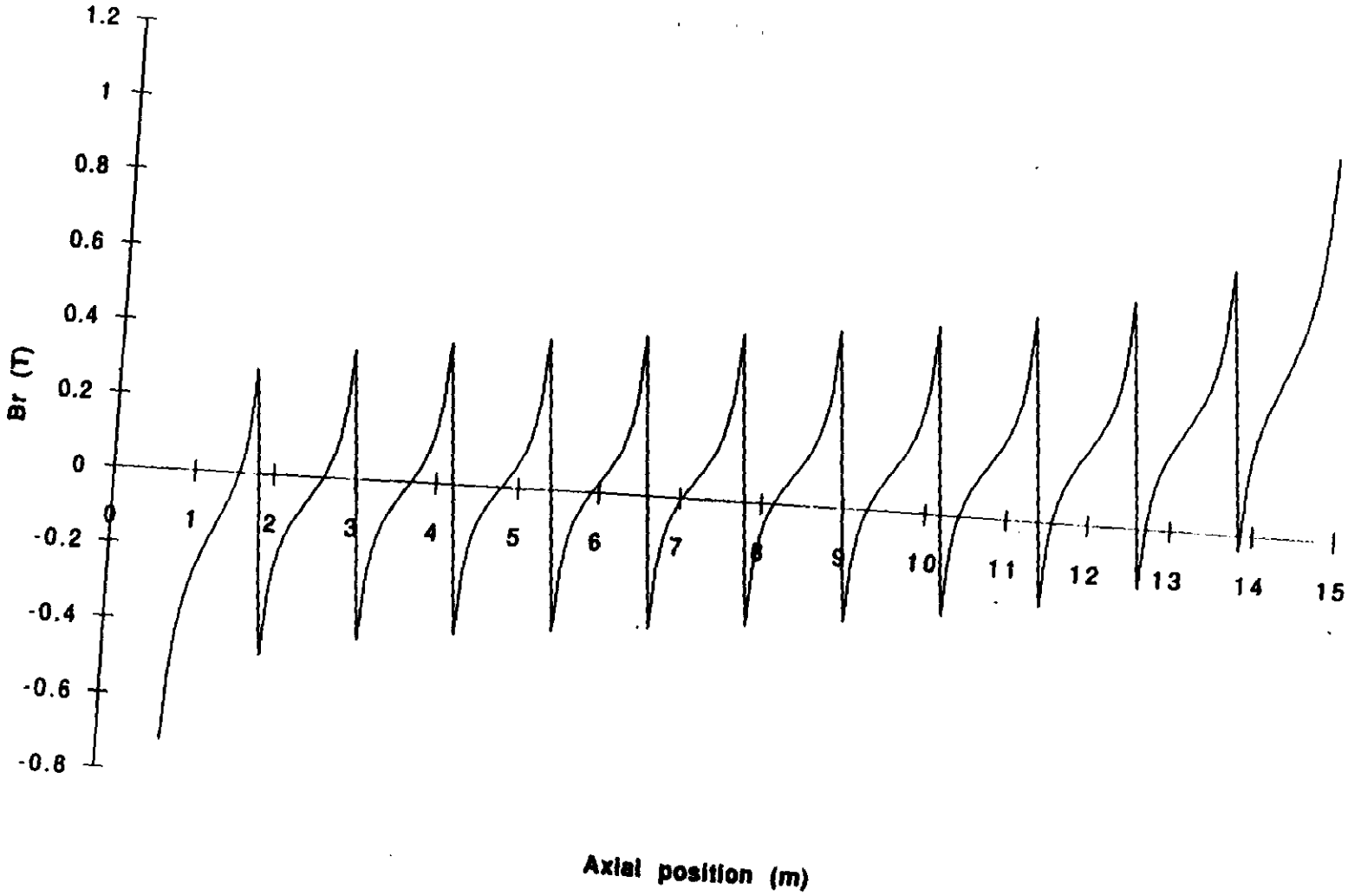

3/31/92

Cumulative Axial Force within Each Coil Module Due to Coil Alone
(Assumes Infinitely Stiff Flange/Bobbin)

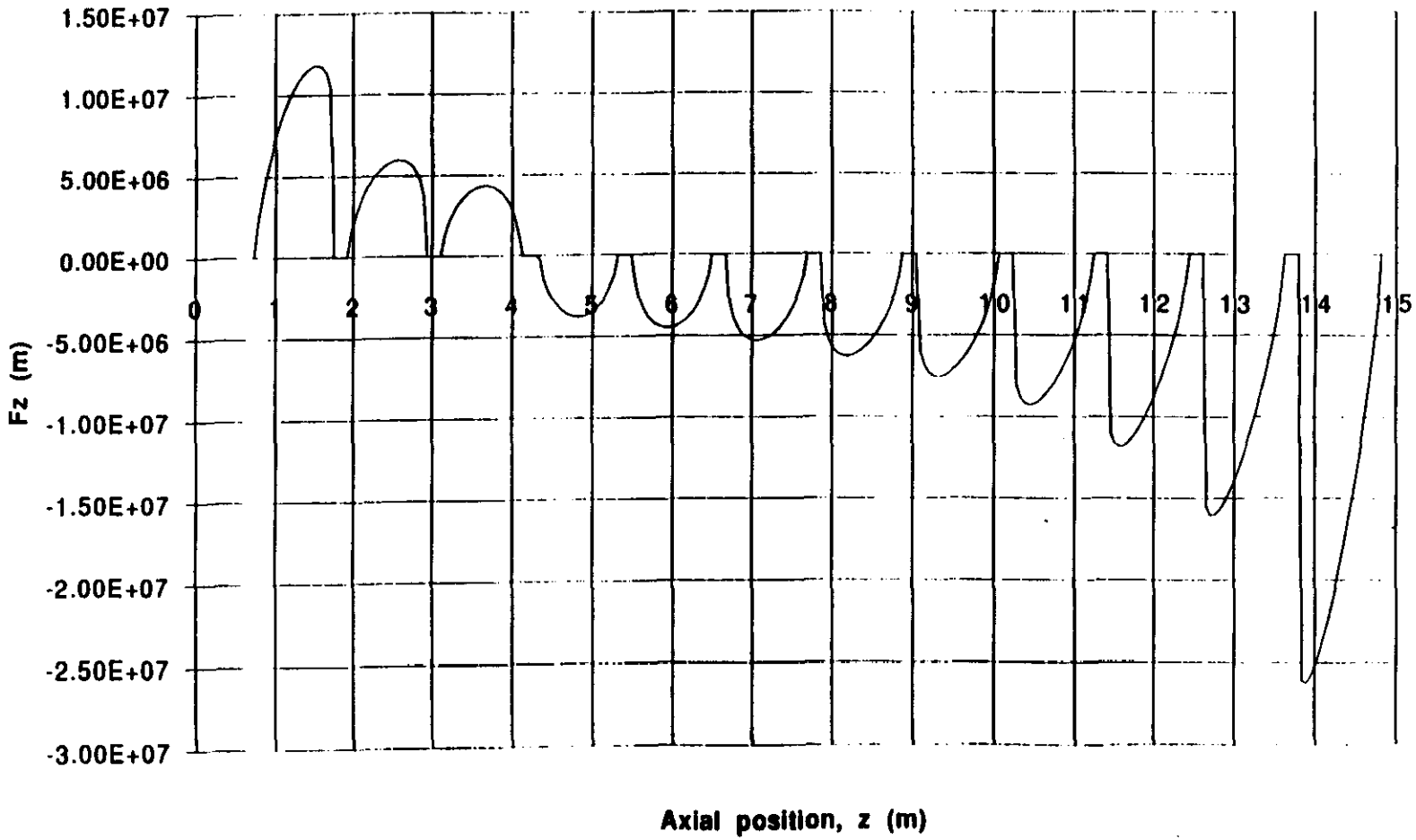

Fz vs z (Coil) 3/31/92

GEM BOBBIN JOINT
TURNBUCKLE CONCEPT

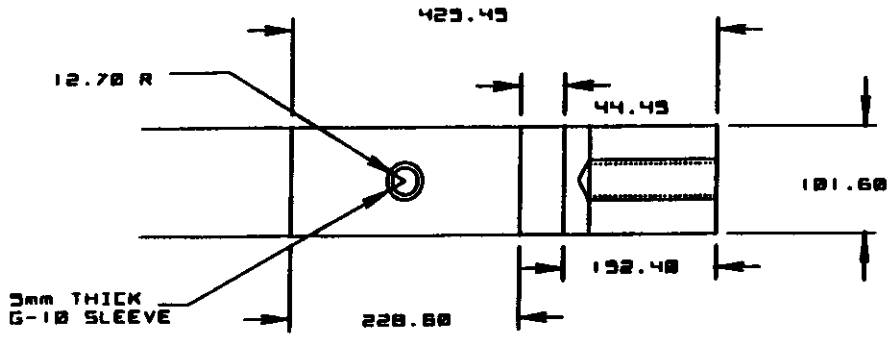

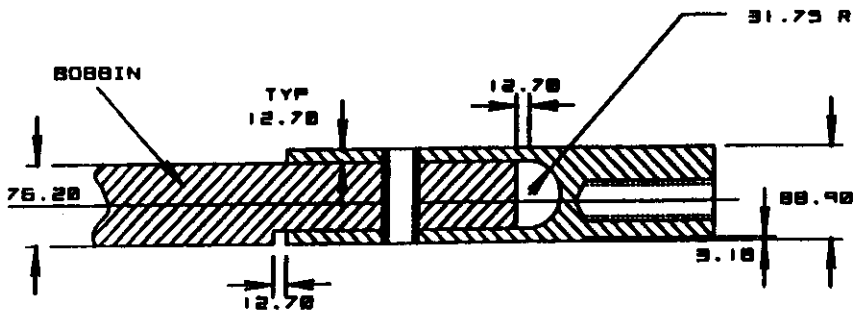

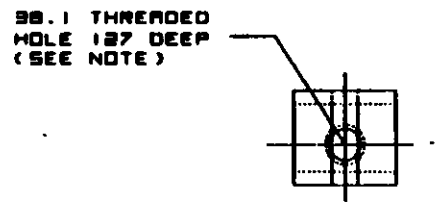

PRELIMINARY

NOT TO SCALE
MATERIAL SS 304
DIMENSIONS IN mm

NOTE: THE LEFT SIDE SHOULD HAVE LEFT THREADS AND THE RIGHT SIDE SHOULD HAVE RIGHT THREADS

GEM BOBBIN JOINT TURNBUCKLE CONCEPT

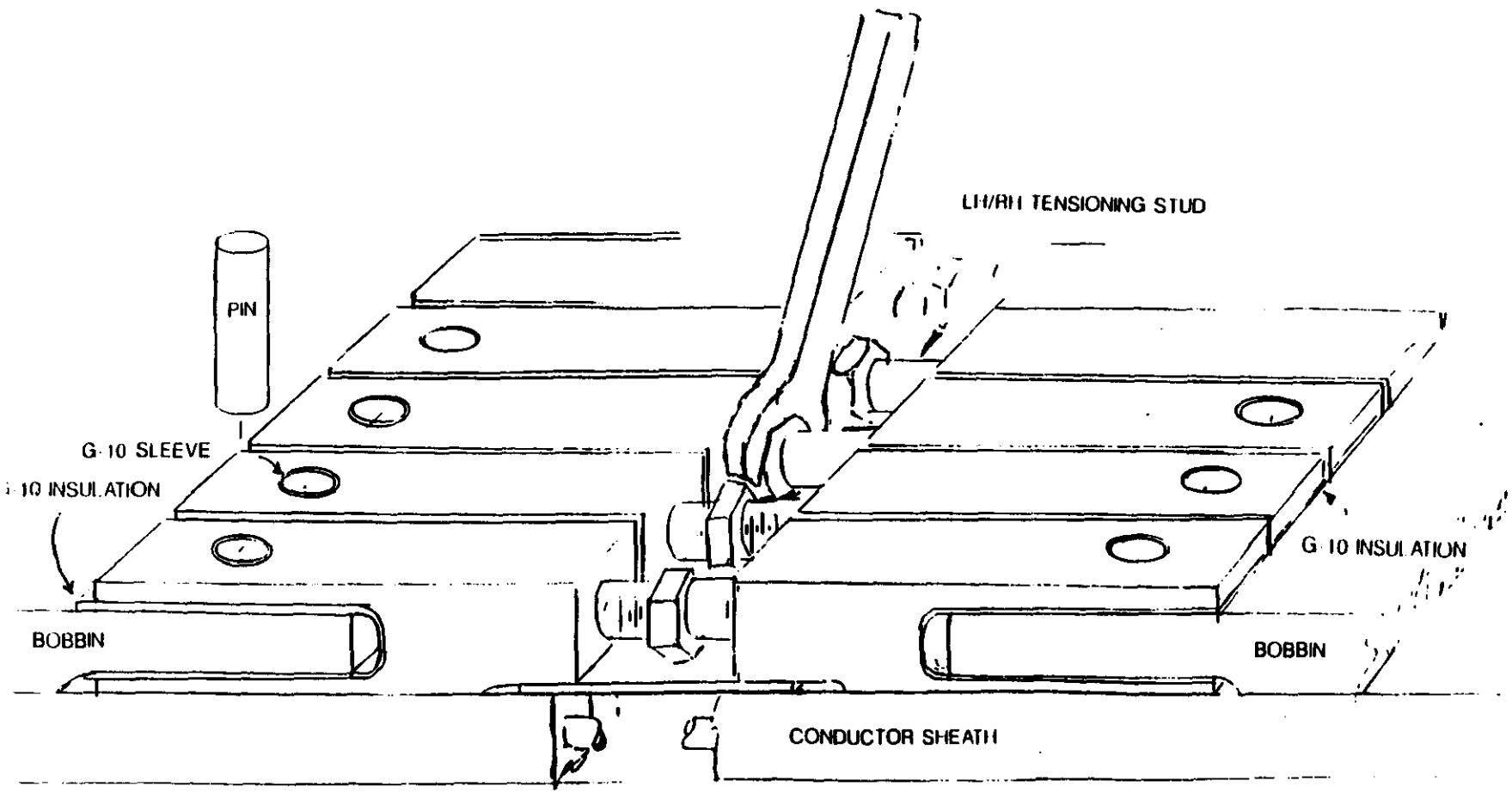

Module and Coil Weight Summary

Module	
Bobbin	14,882 kg
Comp flanges	13,875 kg
Al sheath	7,986 kg
Conduit	1,607 kg
Cable	1,352 kg
Turn insul.	1,846 kg
Ground wrap	1,819 kg
No. turns /module	19
Total module weight	43,367 kg
Number of Modules/Half	12
Cold Mass [redacted] half weight	520,404 kg
Cold Mass [redacted] weight	1,040,808 kg

BOBBIN ASSY. DIM.

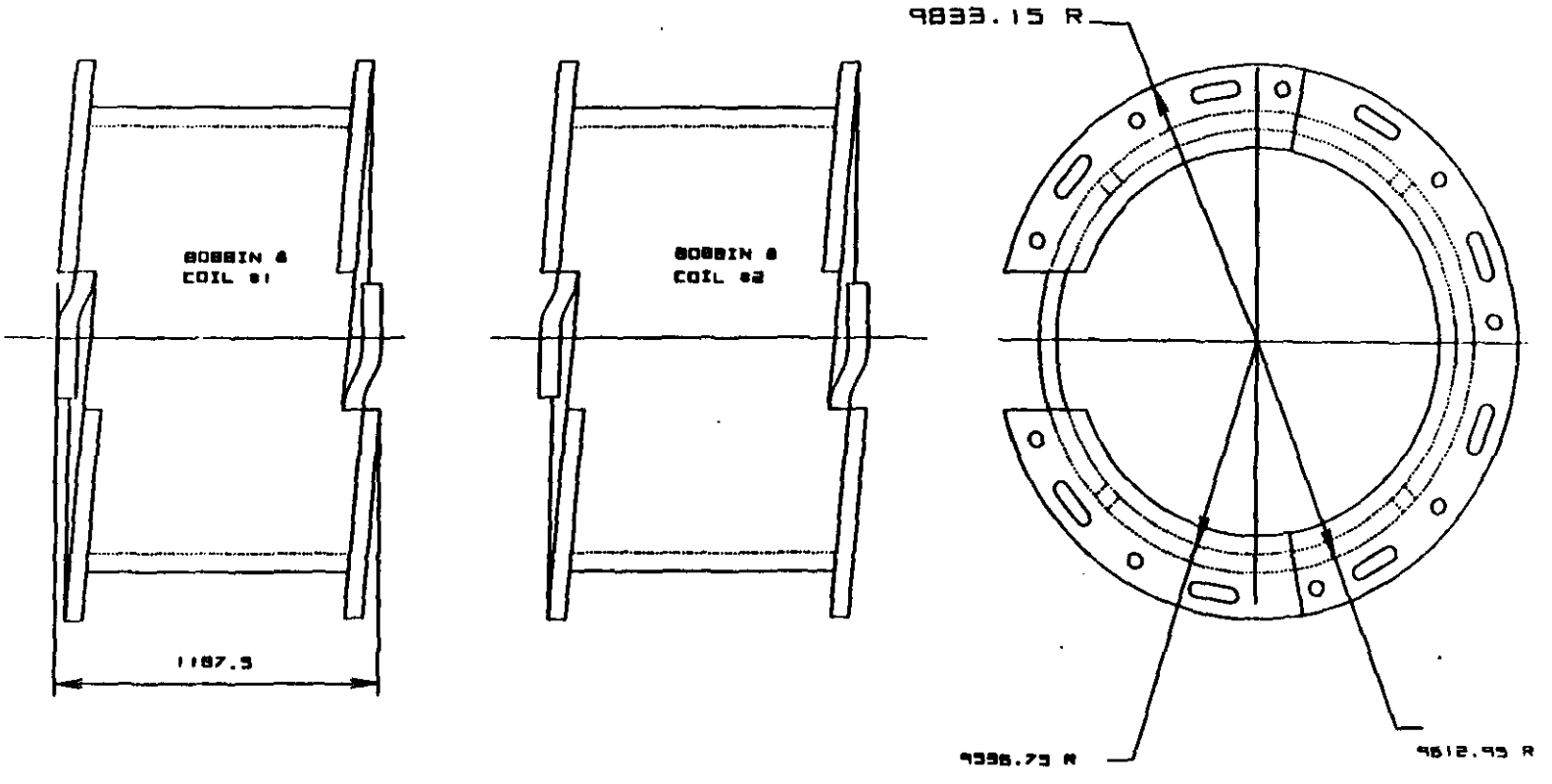

PRELIMINARY

NOT TO SCALE

DIMENSIONS IN mm

TWO COILS ASSEMBLY

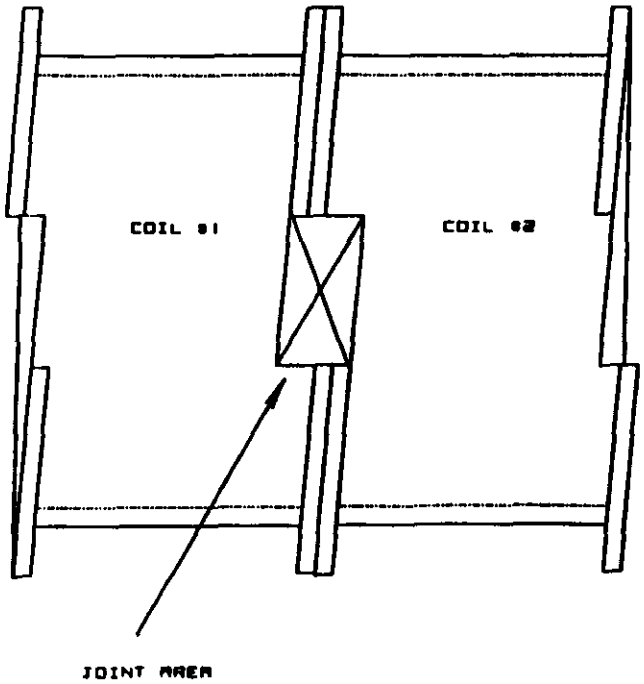

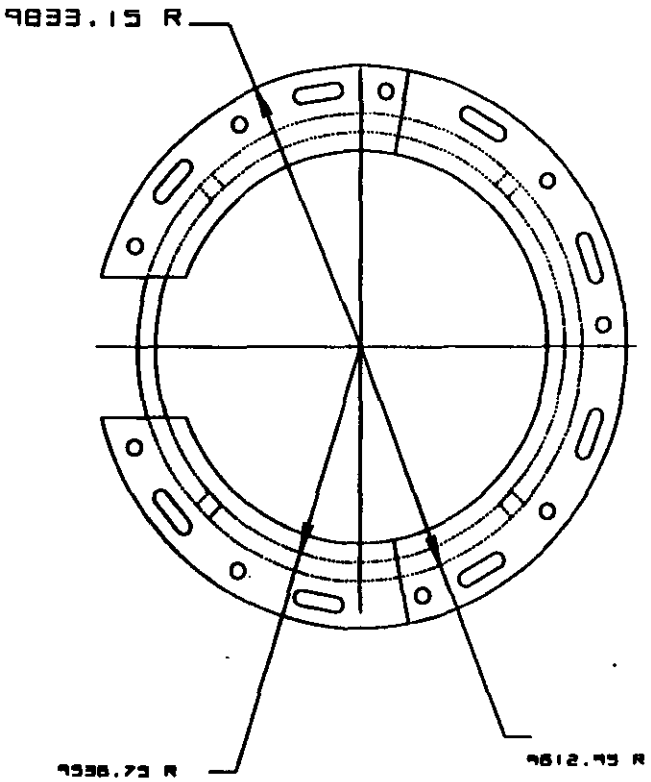

PRELIMINARY

JOINTS

- 22 Joints between modules required
- 4 current terminations required (2 leads per magnet half)

BASELINE JOINT CONCEPT

- ❑ Based on years of development, experimentation and parametric study
- ❑ Based on design proven in coil operation, e.g. US-DPC
- ❑ Resistive joint, pre-terminated and pre-tested at conductor factory
- ❑ Bolt-up assembly and soft soldering on site
- ❑ Simple close-out welds for cooling tubes
- ❑ Each joint separately cooled
- ❑ Each 1150 m coil module separately vented
- ❑ Joints designed to be cryostable, i.e., these are more stable than the main CIC conductor and thus, not a "weak link"
- ❑ Independent joint, CICC, and bobbin cooling gives much operational flexibility, including the ability to operate beyond nominal design point or the ability to recover from a limited set of design, fabrication and assembly errors.

U 71 00 001

HIGH PRESSURE Le He OUTLET ASSEMBLY GUIDE

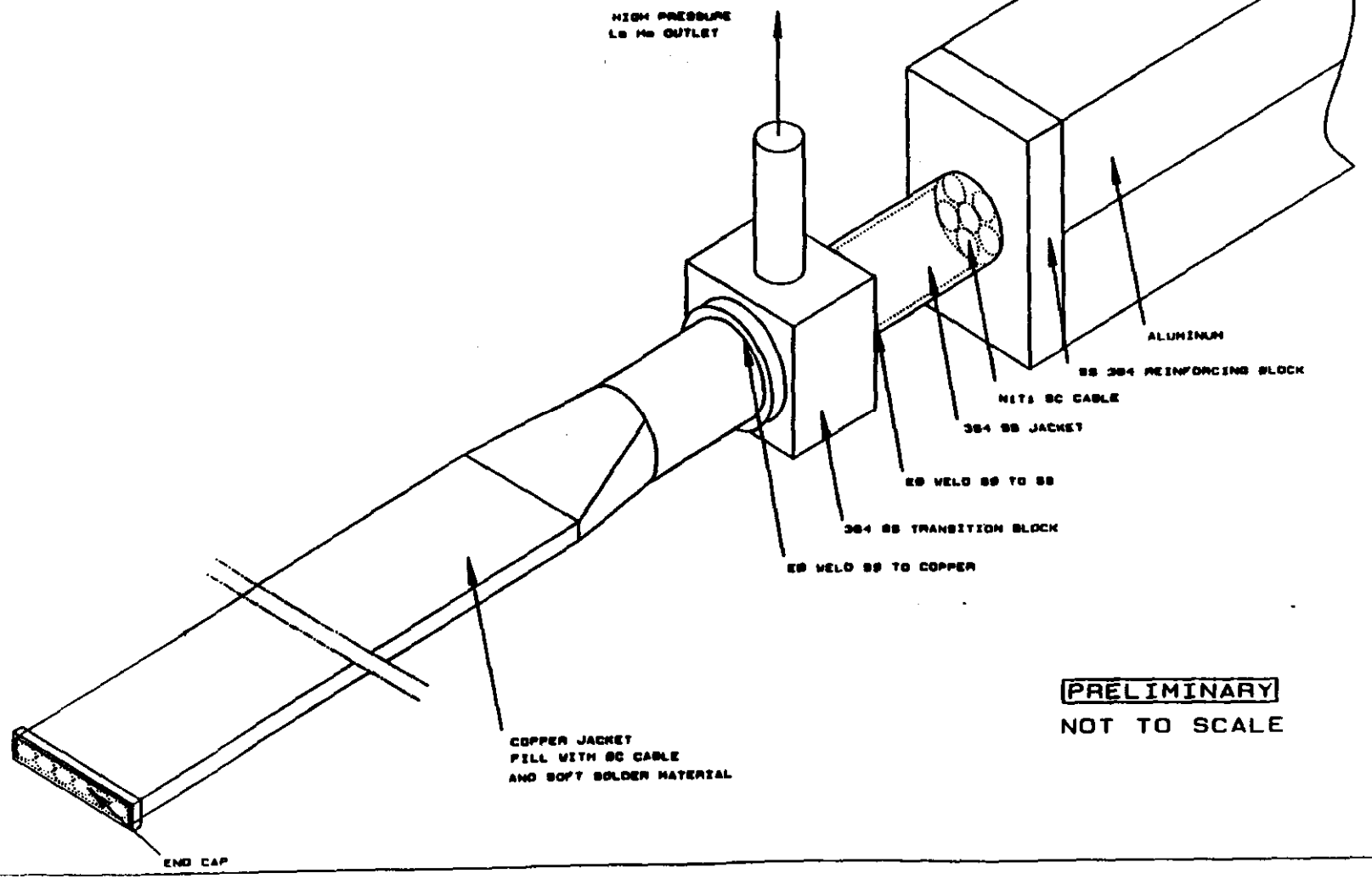

PRELIMINARY

NOT TO SCALE

D # C-0-003

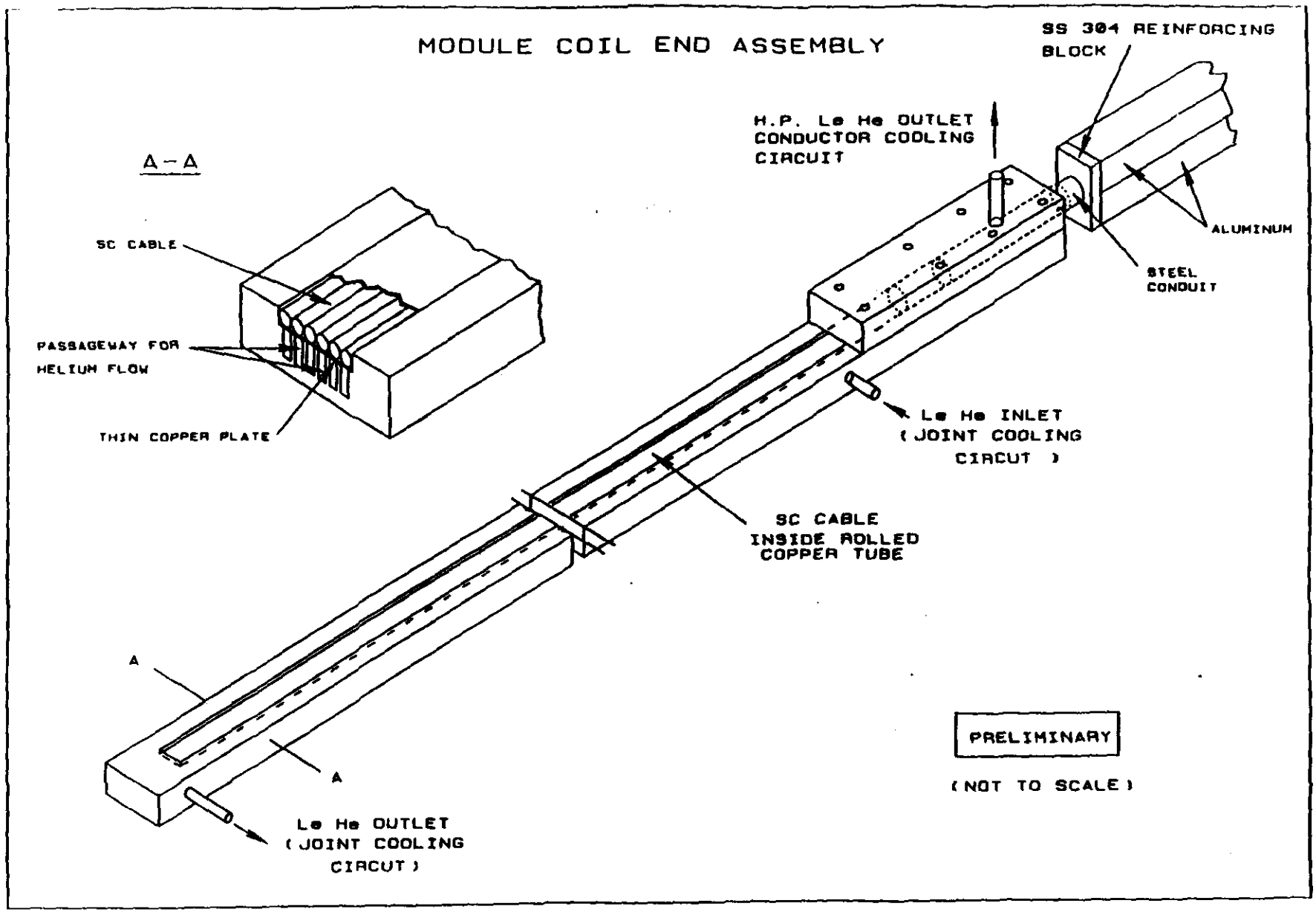
MODULE COIL END ASSEMBLY
SS 304 REINFORCING BLOCK
H.P. Le He OUTLET CONDUCTOR COOLING CIRCUIT
A-A
SC CABLE
PASSAGEWAY FOR HELIUM FLOW
THIN COPPER PLATE
ALUMINUM
STEEL CONDUIT
Le He INLET (JOINT COOLING CIRCUT)
SC CABLE INSIDE ROLLED COPPER TUBE
A
A
Le He OUTLET (JOINT COOLING CIRCUT)
PRELIMINARY
(NOT TO SCALE)

GEM CONNECTION

PRELIMINARY

NOT TO SCALE

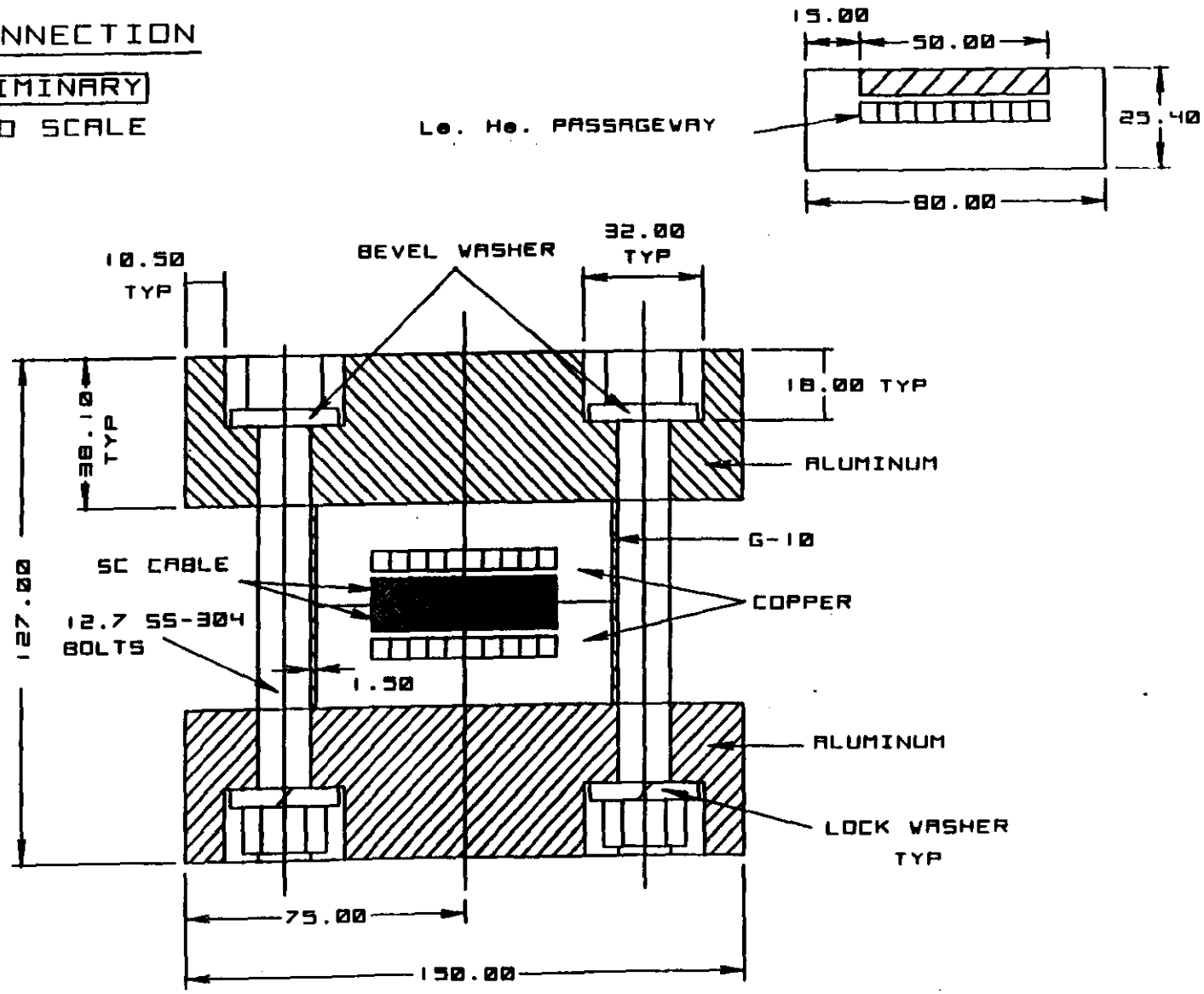

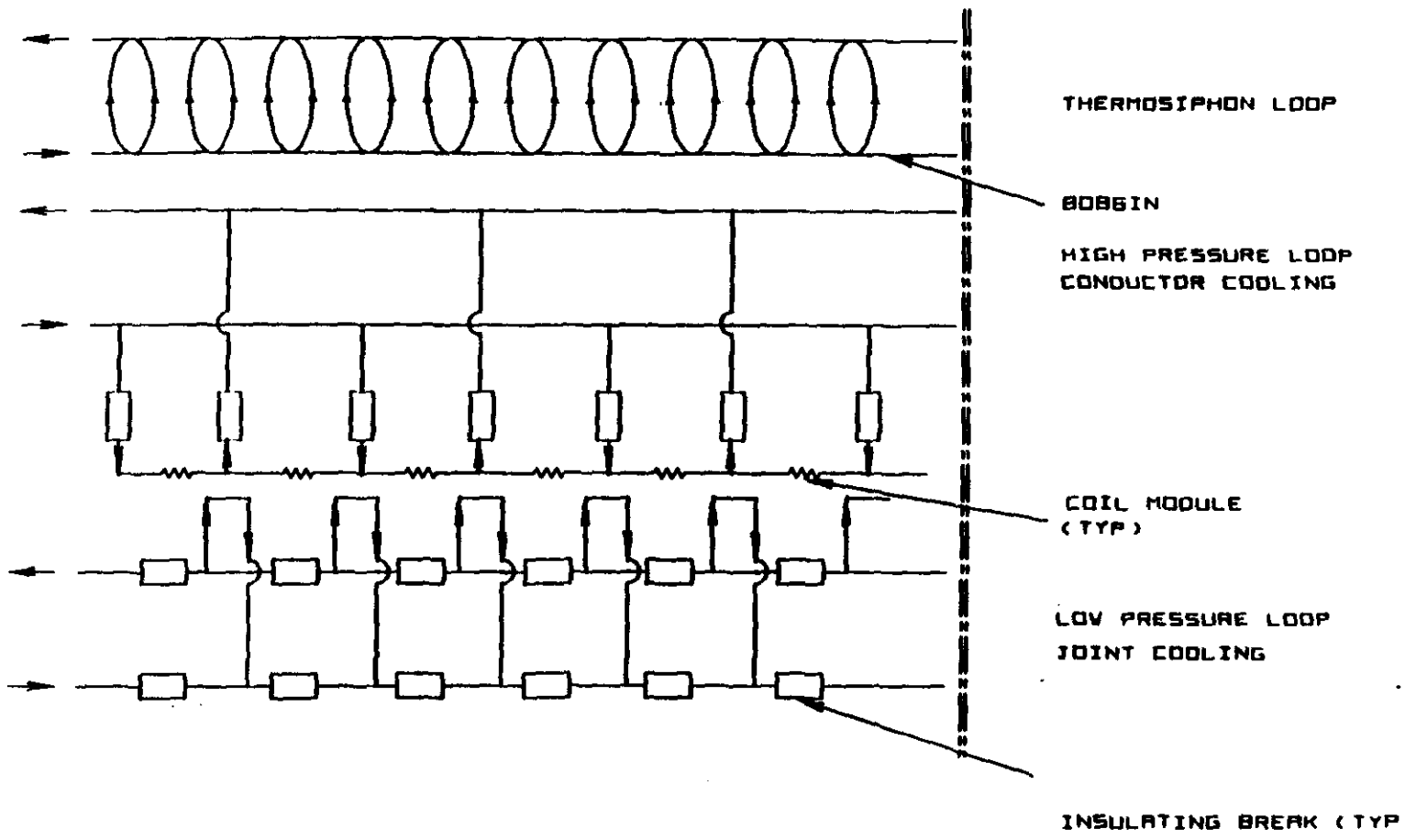

HELIUM FLOW SCHEMATIC

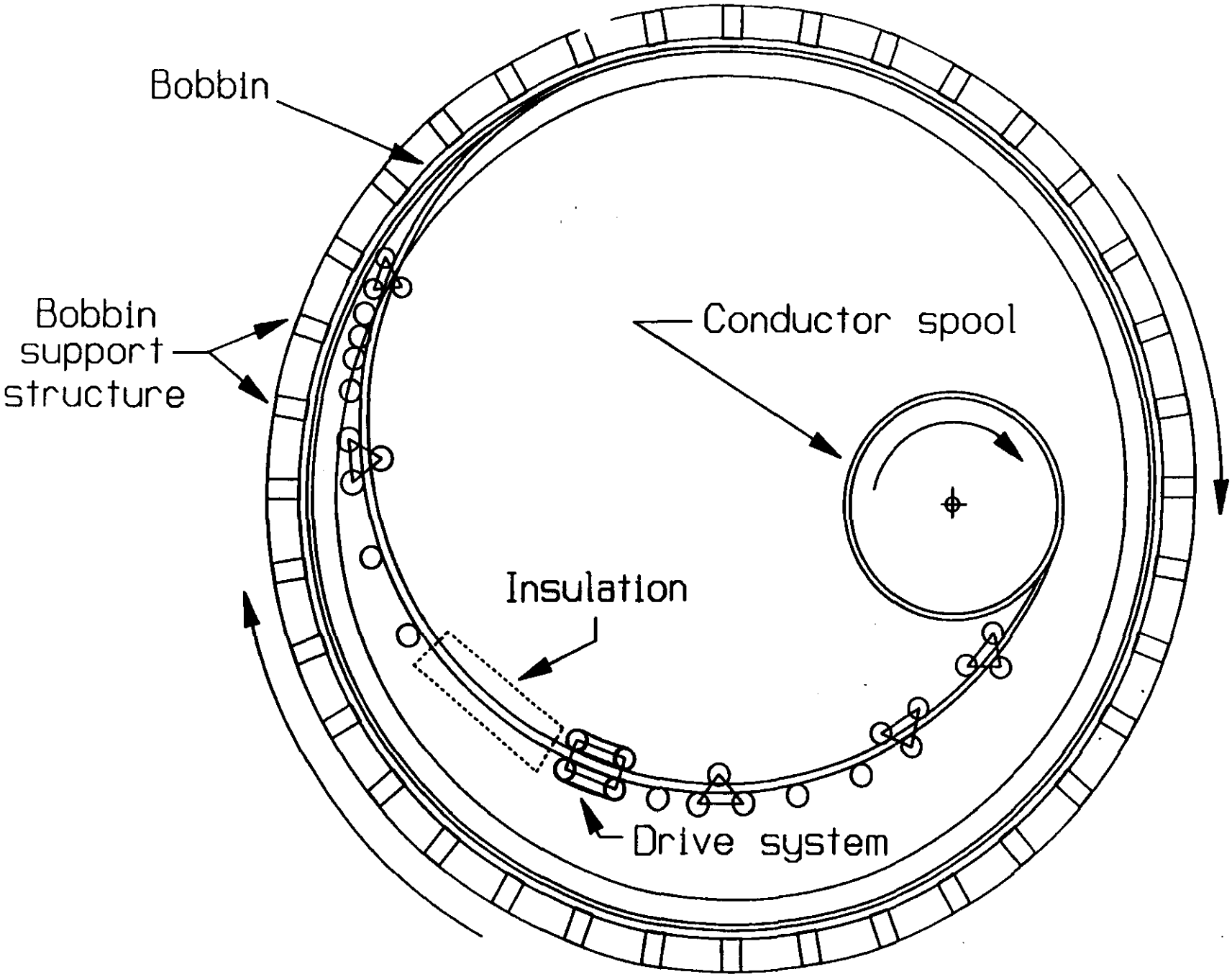

Module Winding Concept

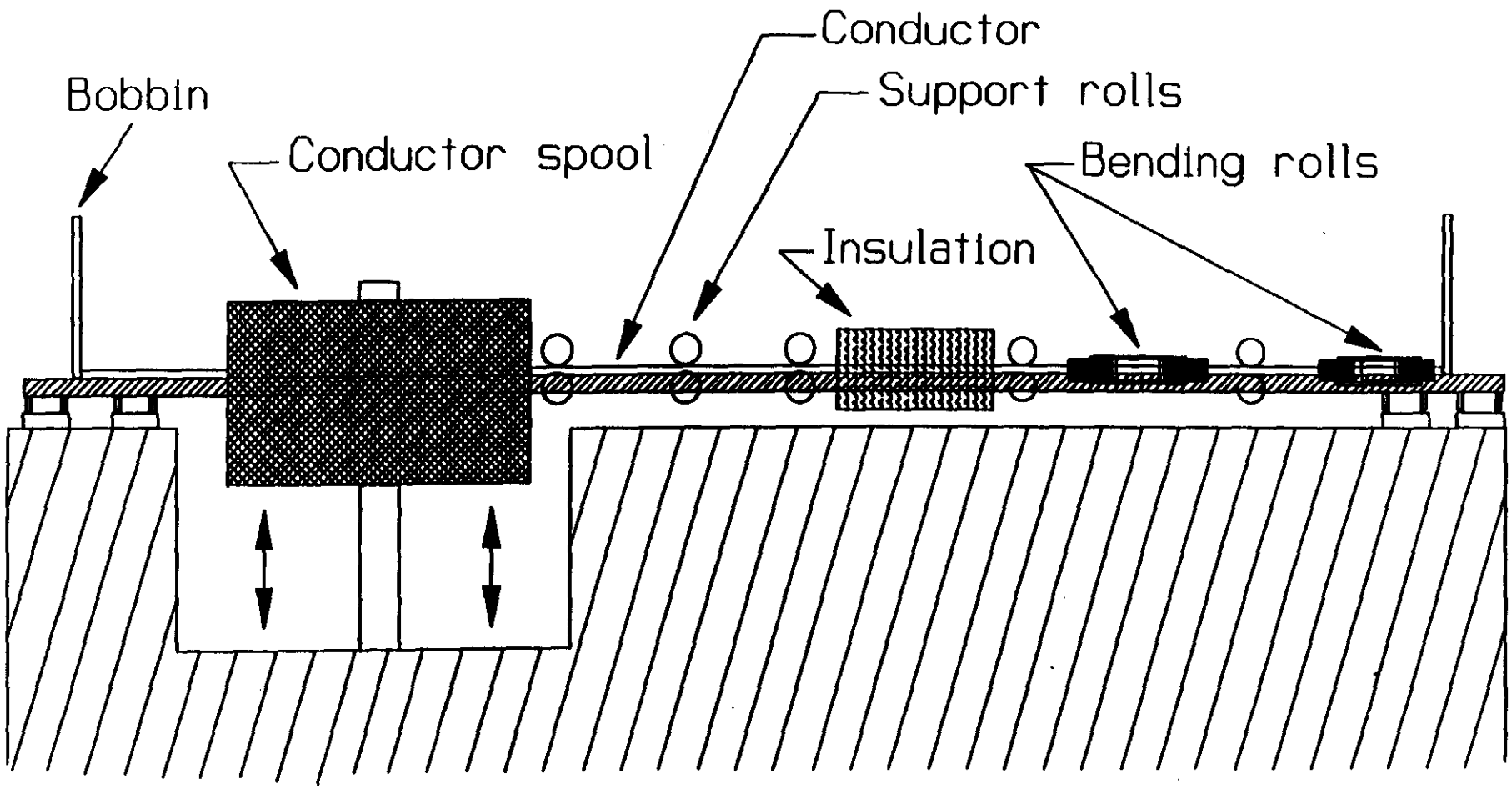

Module Winding Concept

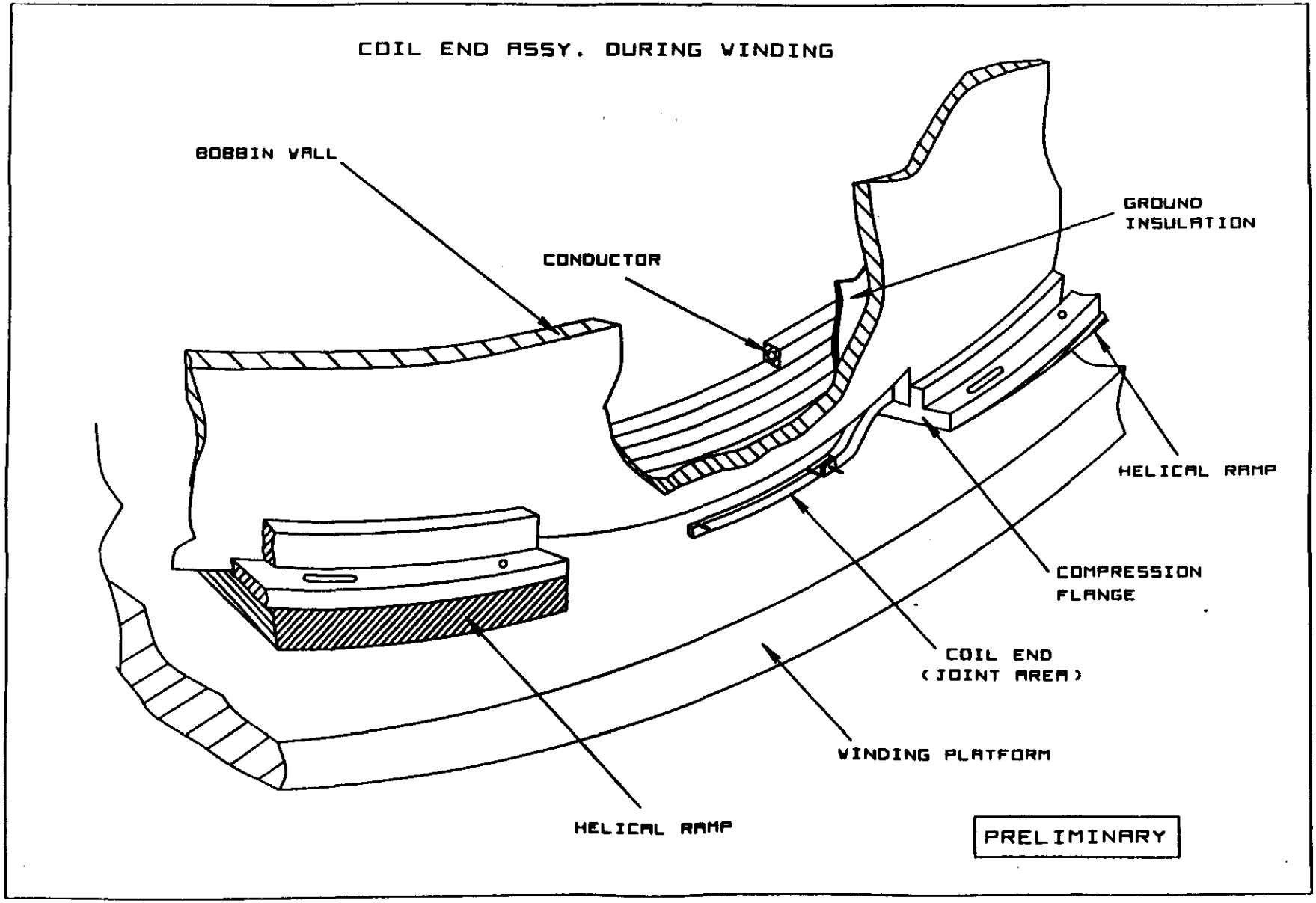
COIL END ASSY. DURING WINDING
BOBBIN WALL
CONDUCTOR
GROUND INSULATION
HELICAL RAMP
COMPRESSION FLANGE
COIL END (JOINT AREA)
WINDING PLATFORM
HELICAL RAMP
PRELIMINARY

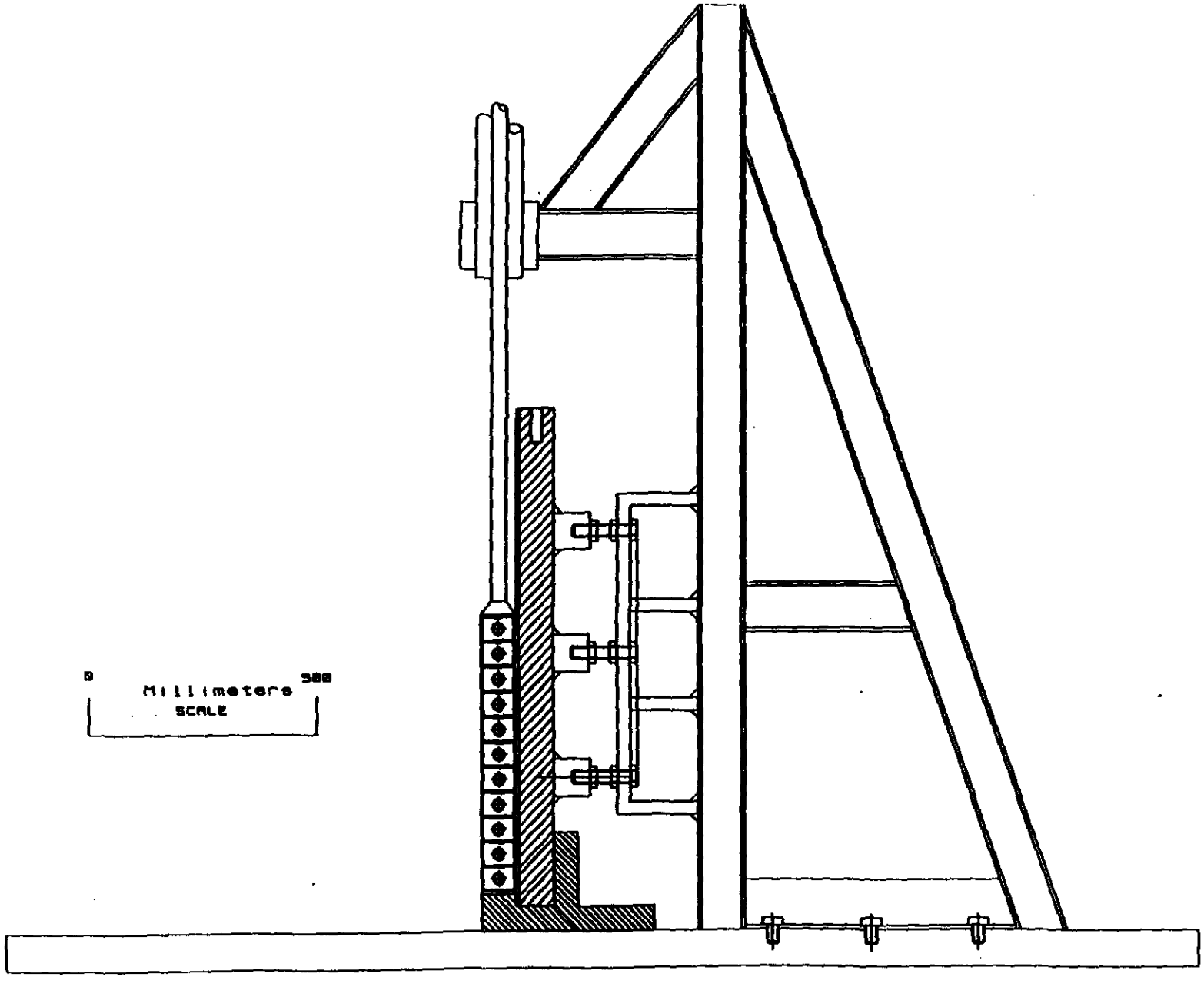

Coil Winding Support Frame
(Partial Winding)

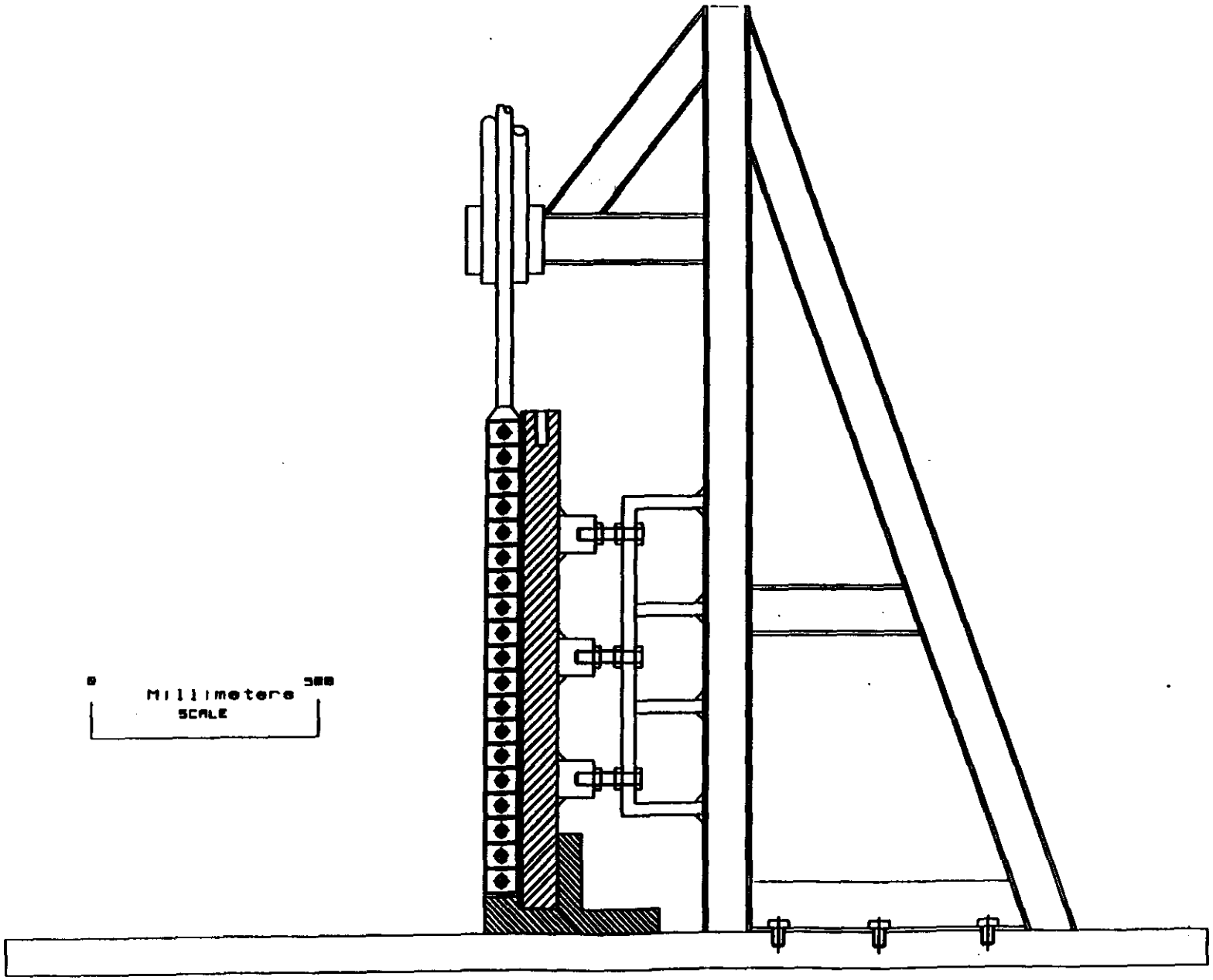

Coil Winding Support Frame
(Full Winding)

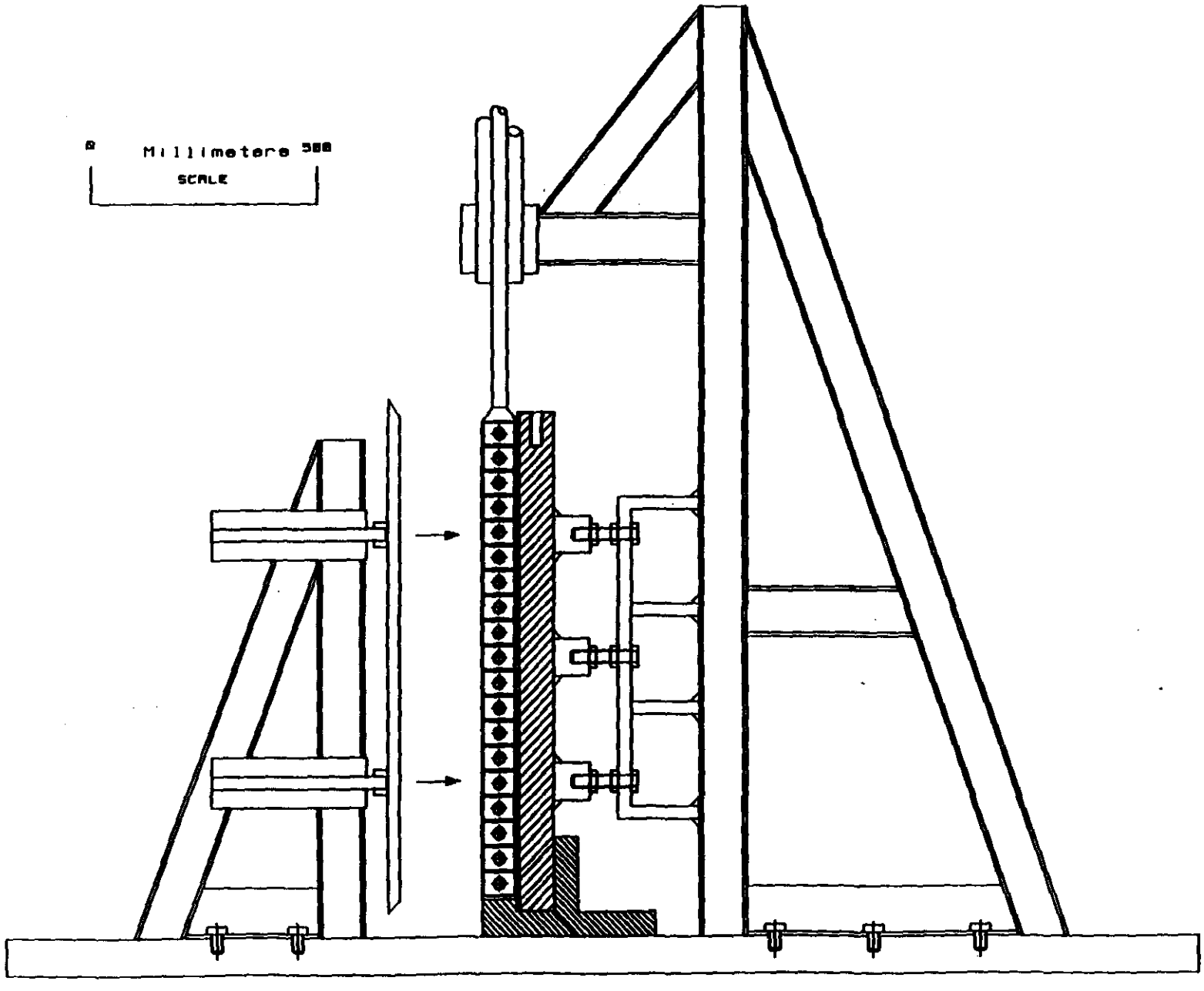

Winding Support Frame with Internal Bracing
(if needed)

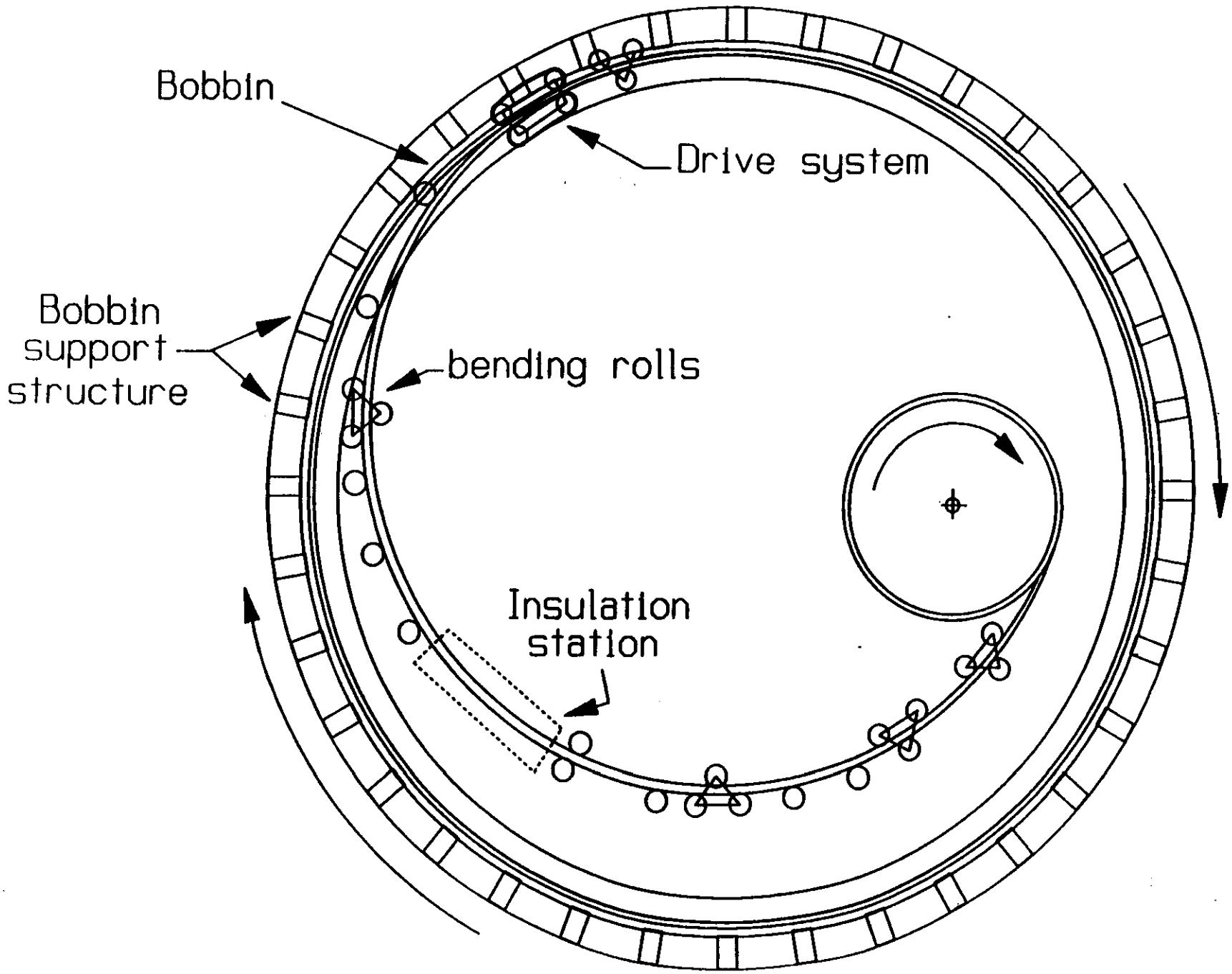

Alternate Winding Concept #1

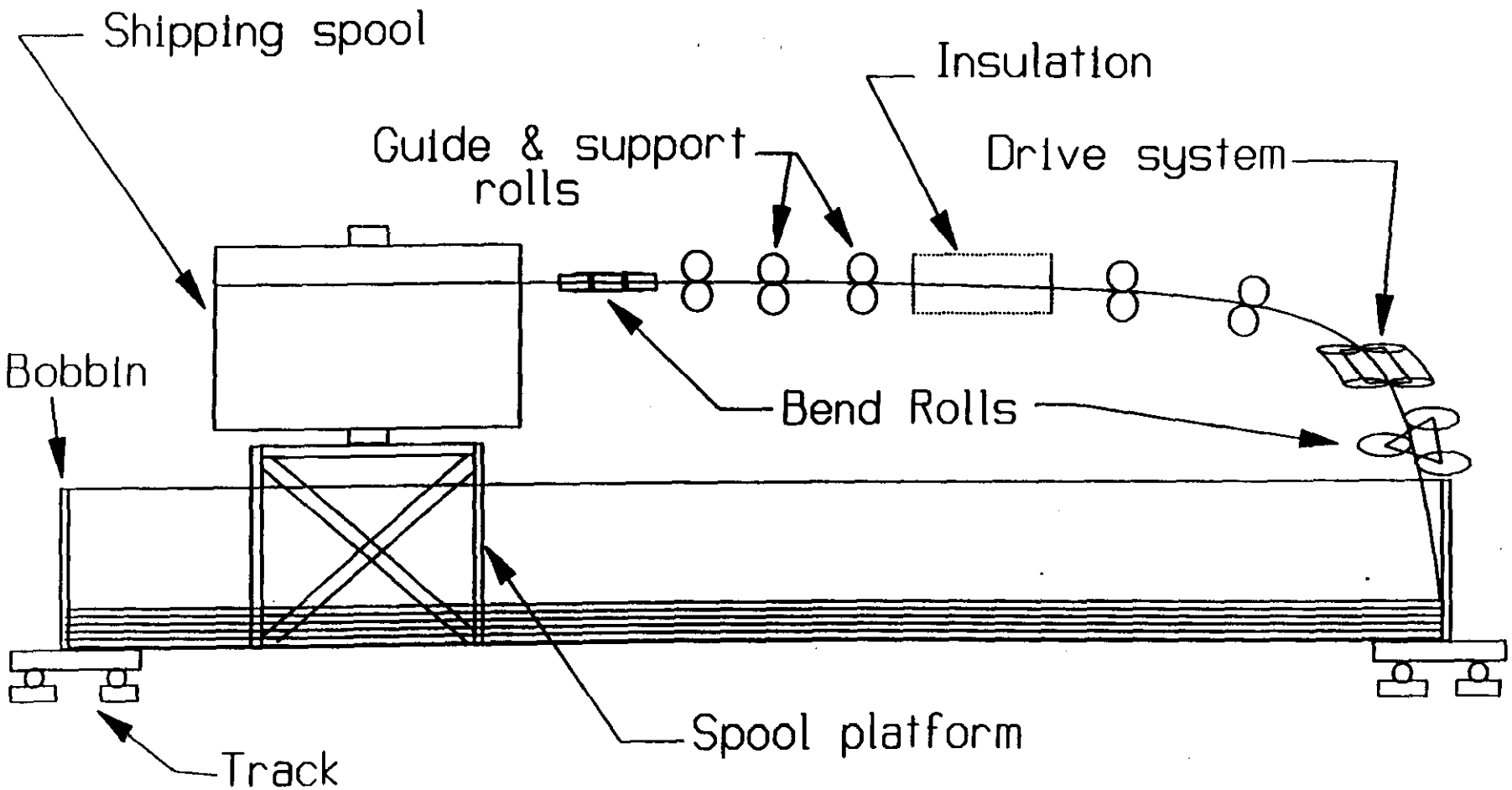

Alternate winding Concept #1

Internal Winding Scheme - *Alternate 2*

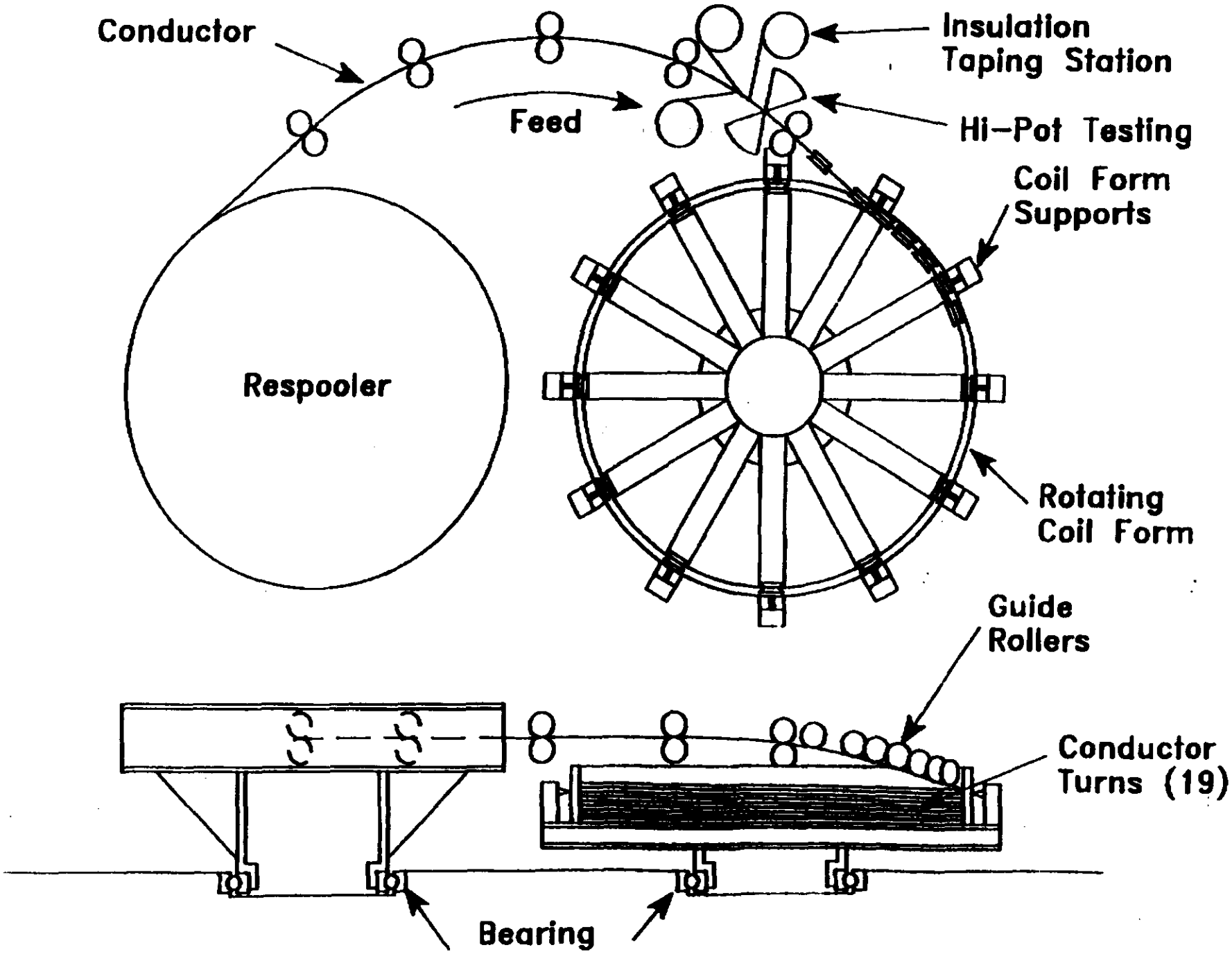

Conductor Process Line - Alternate 2

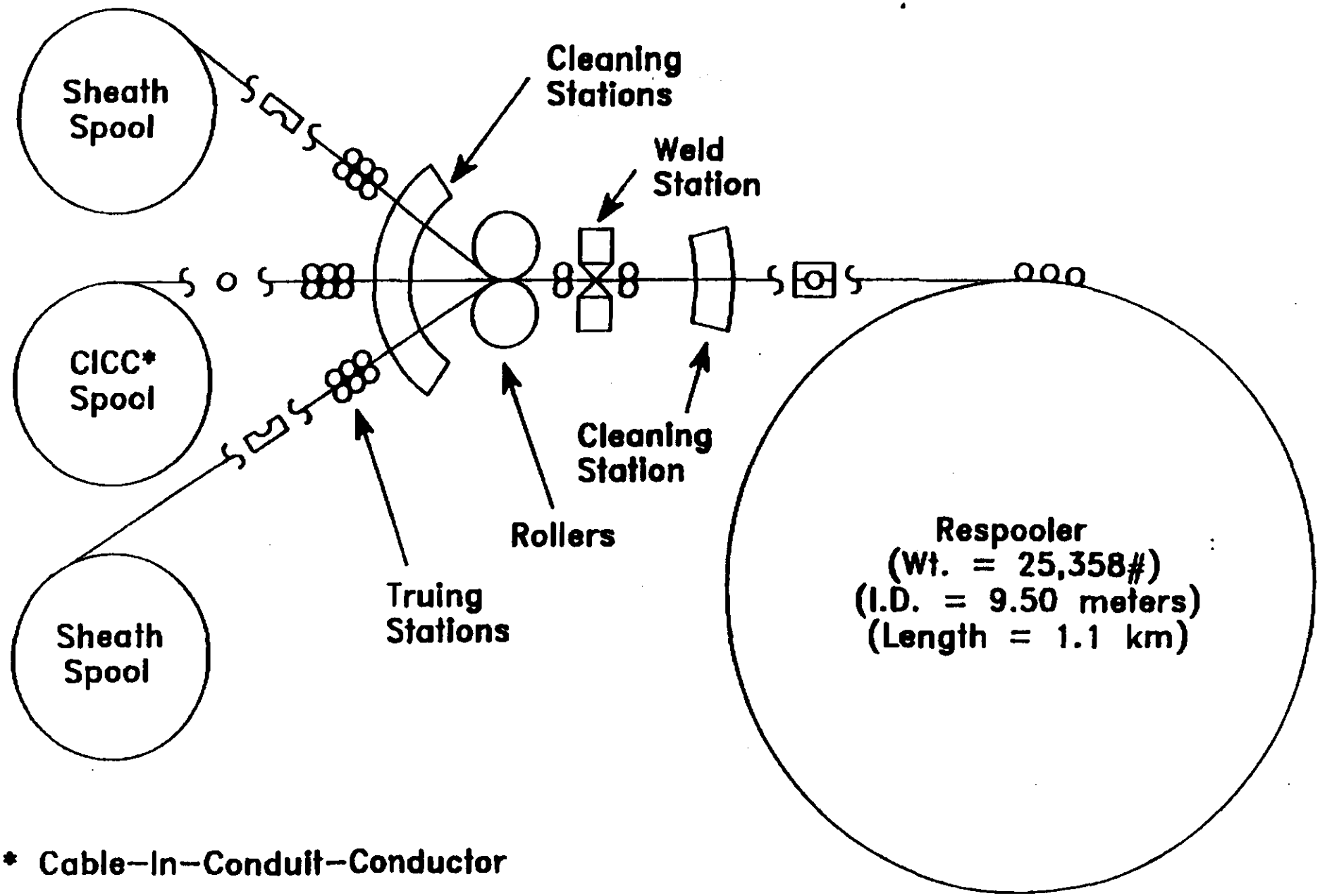

* Cable–In–Conduit–Conductor

Superconducting Super Collider

Vacuum Vessel and Vacuum System

Joel Bowers

Lawrence Livermore National Laboratory
April 1, 1992

Overall goals and requirements (vessel)

- Cryostat
  - provides vacuum insulation for cold magnet
  - structural support for magnet coil and N_2 shields
    - cool down loads
    - magnetic loads
    - static and seismic loads

- muon detector support
  - 16 sectors, each weighing 10 tons
  - hang from vessel end rings
  - fairly strict stability requirements

- field shaper support
  - hold axial load of 10 million pounds from field shaper

Major design parameters (vessel)

- Annular vacuum vessel for operation pressure of 10^{-4} torr
- Outer shell external pressure vessel
- Inner shell internal pressure vessel
- Low carbon steel, SA516 gr 70 vessel wall
  - possible clad stainless steel inner wall

- Two vessels
  - each 900 tons
  - each 15 meters (50 ft) long
  - each 21.8 m (71.5 ft) overall outside diameter
  - each independently mounted
  - each transportable

- Inner shell 1" wall, no stiffeners
- Outer shell 2" wall, stiffened

Magnet Subsystem

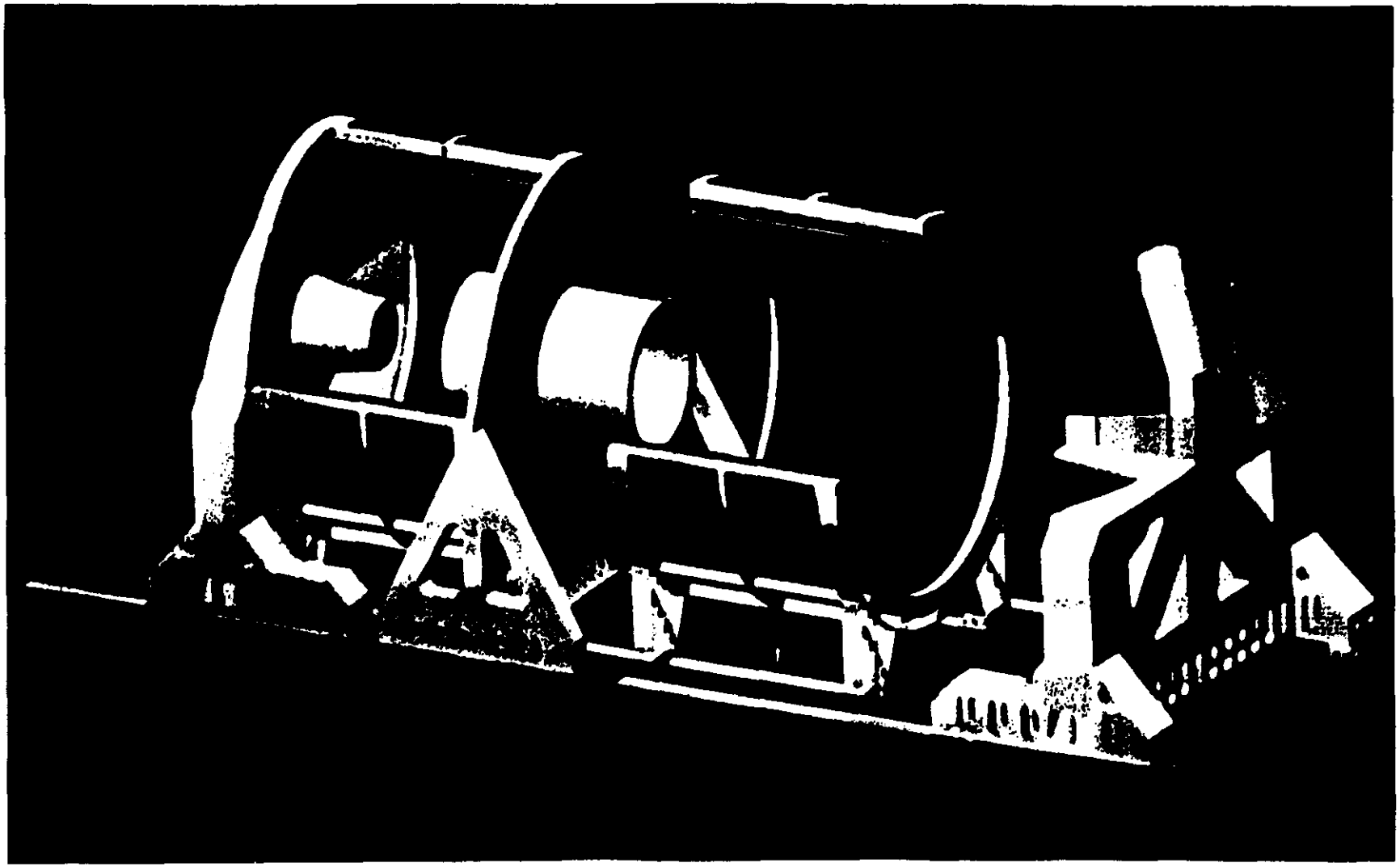

Vessel and support structure

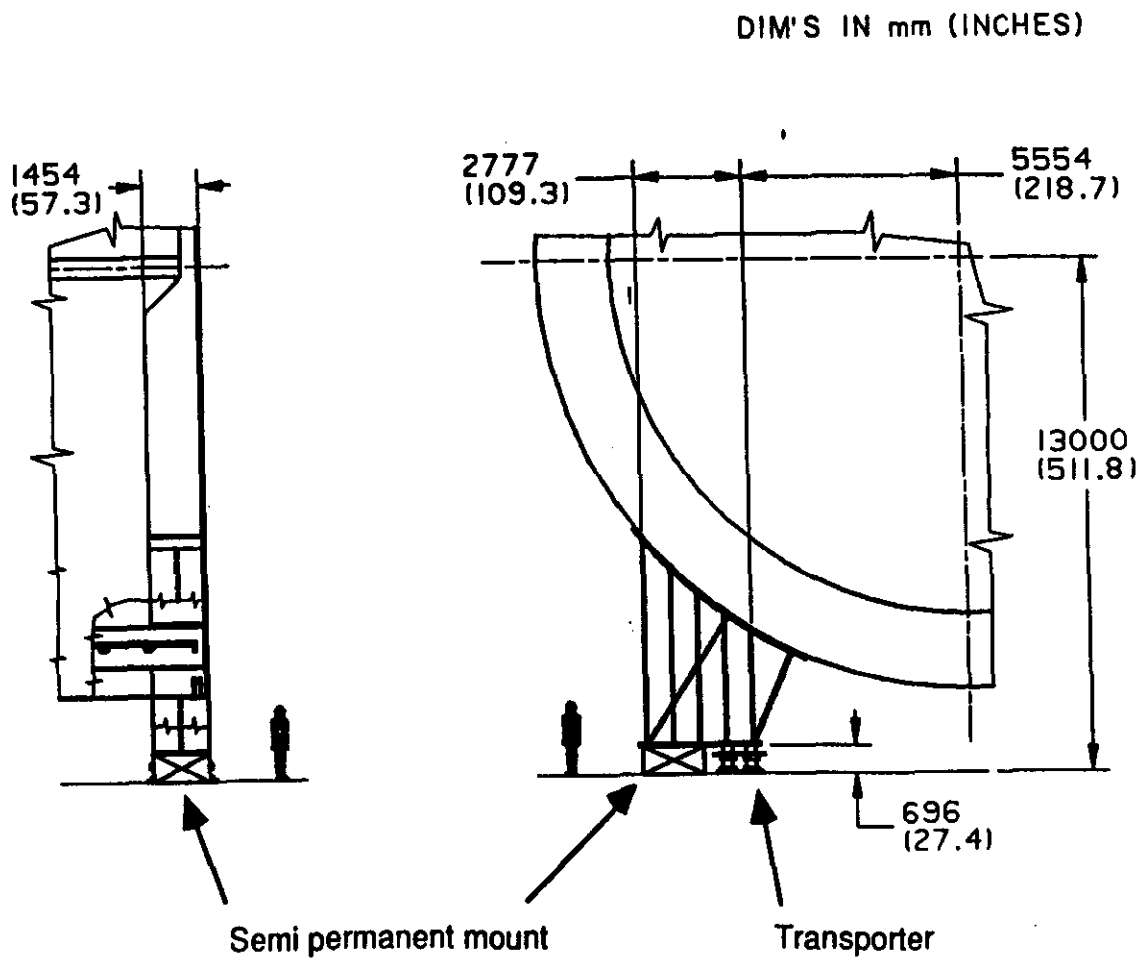

JMB-5
3/29/92

Typical outer vessel weld

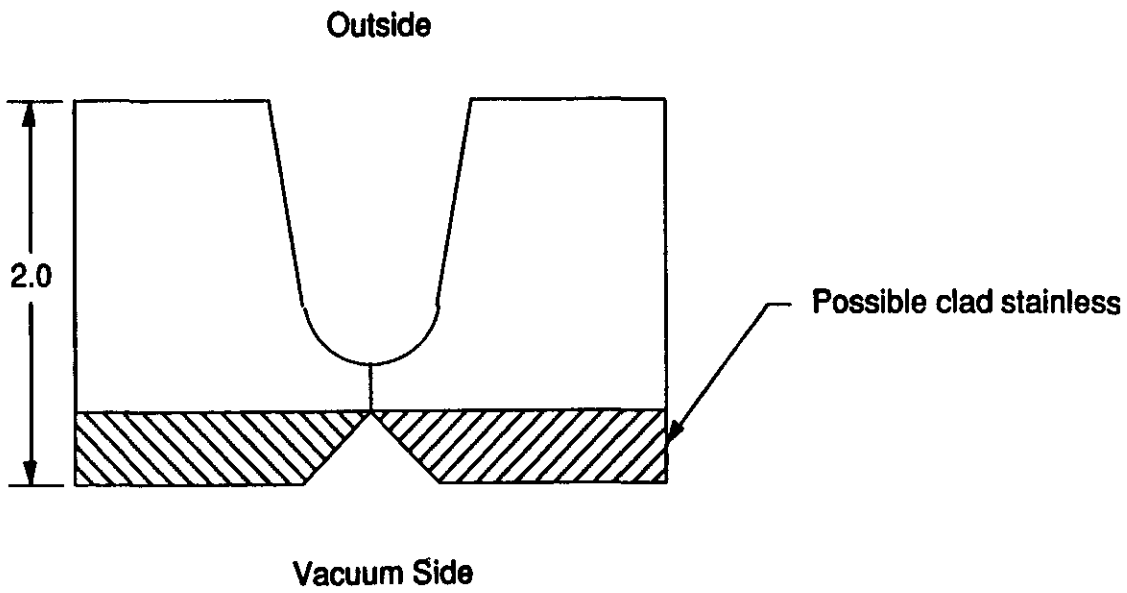

- 4000 pounds of weld in each outer vessel shell

Outer vessel section construction (40 plates)

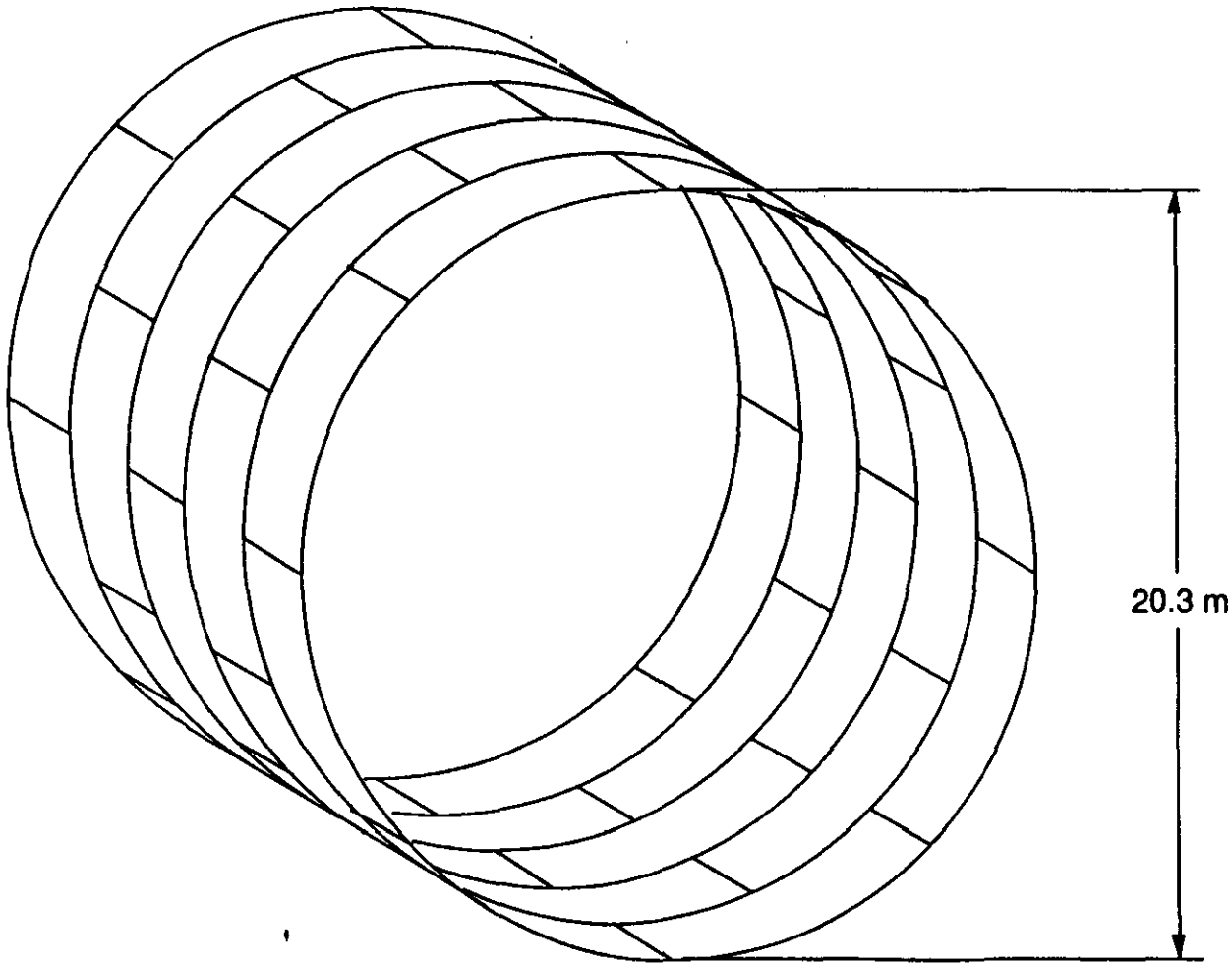

JMB-6
3/27/92

Vessel cross section arrangement (end)

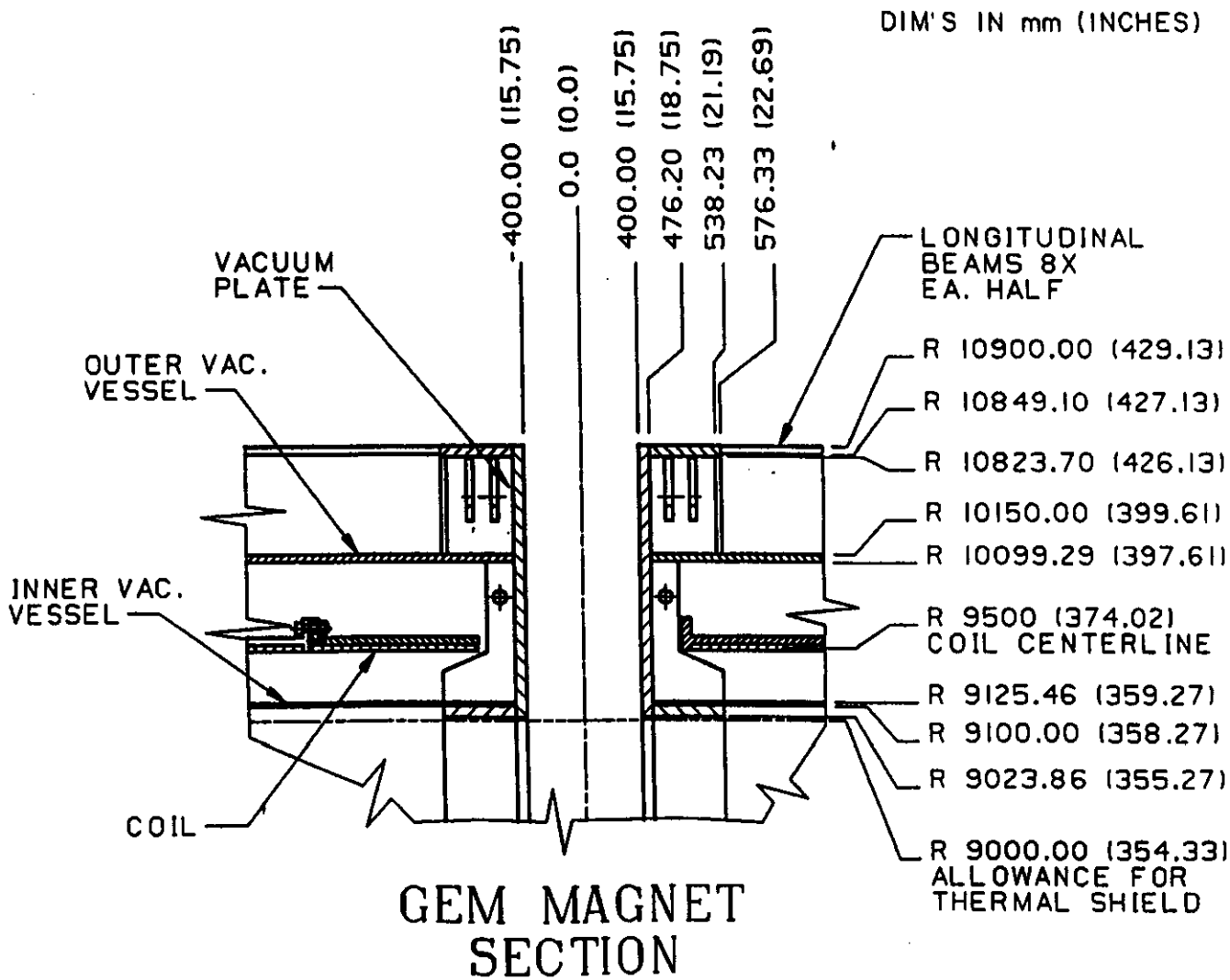

JMB-8
3/27/92

Vessel cross section arrangement (center)

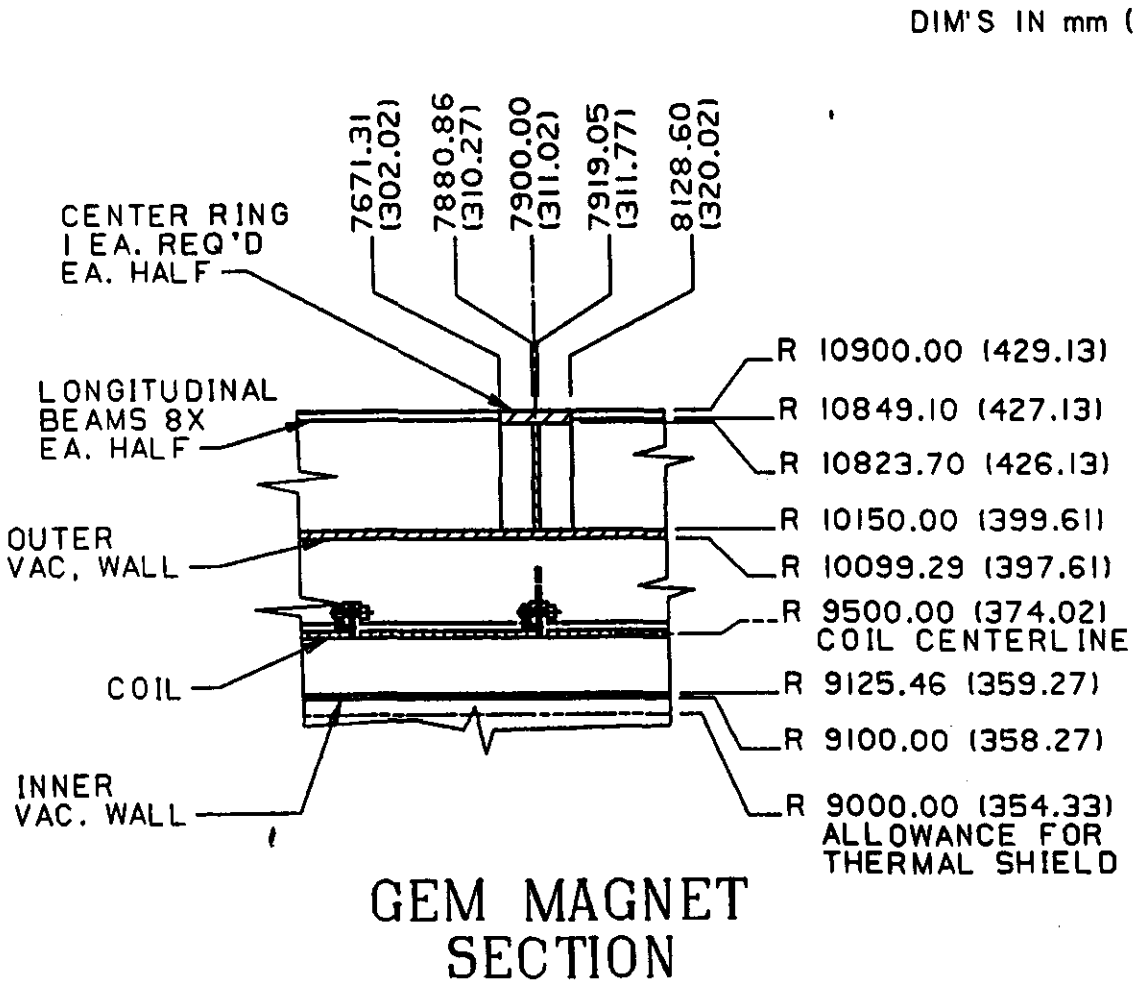

JMB-9
3/27/92

Vessel transport system

- One modular transporter unit at each vessel saddle leg
  - 900 ton lifting and moving capacity each

- Each transporter
  - contains 6 ea 150 ton jacks
  - horizontal motion element: grease pads or Hillman rollers

- Grease pad characteristics
  - low friction
  - two direction horizontal motion
  - no track required
  - makes a mess
  - needs pumping system
  - need smaller driver

- Roller characteristics (Hillman or railcar truck)
  - conventional and clean
  - higher friction than grease pad
  - one direction movement
  - requires track
  - need big driver

Standards and Specifications (vessel)

- A Fabrication Specification will control the procedures and materials used in vessel and structural construction

- ASME Code stamp is not required...

BUT

Project will follow many controls and certifications in accordance with the stamp, including:

welder certifications
inspector certifications
material records
dimensional inspections
NDE certifications

Construction and fabrication issues (vessel)

- Schedule / milestone tracking
- Mill run procurement
- On site/ off site fabrication and machining
- Automatic welding opportunities
- Low carbon - stainless steel welds
- Blasting and painting
- Rigging considerations
- Leak checking
- Vacuum wall surface finish
- Clad steel vs painted vacuum wall
- Vertical vs horizontal construction
- Tolerances
- Installation and alignment
- QA program plan

Vacuum system general description

Basic System

Roughing System

- 2 ea 4000CFM roots blowers
- Backed by a 300 CFM mechanical pump
- 2 refrigerated traps
- 2 ea 12" gate valves for roots blowers

High vacuum system

- 4 ea 20" diffusion pumps
- Nitrogen traps above diffusion pumps
- 4 ea 20" poppet valves for diffusion pumps
- Backed by one 300 CFM mechanical pump

Control System

NOTE: must operate in significant magnetic field

Procurement issues (vacuum system)

- Vacuum pumps will be contracted per a specification
- Existing catalog items with no custom parts.
- Design/ engineering effort will consist of pump down and outgassing calculations, plant packaging.

Superconducting Super Collider

Radiation Shields, Cold Mass Supports & Assembly Approaches

Robert M. Yamamoto

Lawrence Livermore National Laboratory
April 1, 1992

Cold Mass Supports

- Function
  - to support static weight of coil (520 metric tonnes per coil half)
  - to maintain magnetic alignment of coil to beam axis
  - to counteract magnetic force on coil when energized (52 mega-newtons per coil half)

- Requirements
  - minimize heat load to 4°K surfaces
  - allow for thermal contraction of the coil without inducing additional stresses/distortion to the assembly
    - coil will contract 2.75" on the diameter
    - coil will contract 2.00" axially
  - correctly position/maintain magnetic centerline of the coil relative to the beam axis

Radial Support Rods

- 4"ø 6Al-4V titanium rods, approx 11' long
- 8 pairs per half coil end; 64 total
- rods support static weight of half coil
- rods attach to vessel end stiffening rings and to end flanges on coil subassemblies
- rods rotate inward as coil contracts from 300 to 4°K
- utilizes spherical bearings to eliminate bending moment on rods
- utilizes belleville spring washers to maintain tension preload on rods during cooldown
- preload determined by compression stack height of washers
- allows coil to contract symmetrically about the beam axis so that the magnetic centerline position remains constant

Axial Support Rods

- 4"ø 6Al-4V titanium rods, approx 24' long
- 16 per half coil end; 32 total
- rods support static weight of half coil
- rods counteract load on coil due to magnetic forces (rods always in tension as half coils are attracted to one another)
- rods attach to vessel stiffening rings and to bosses on outside of coil bobbin at axial midpoint
- keeps coil correctly positioned in the z-direction (beam axis)
- utilizes spherical bearings and belleville spring washers identical to radial rods

STRUCTURE	THICKNESS METERS	WEIGHT METRIC TONS	MATERIAL
OUTER VAC VESSEL	0.0035		8518 STL GRADE 70
OUTER LN SHIELD	0.020		
BOBBIN	0.050		ALUM 6061-T6
COIL	0.100		ALUM.
BOBBIN & COIL TOTAL	0.150		
INNER LN SHIELD	0.020		
INNER VAC VESSEL	0.010		304L SSI
TOTAL ASSEMBLY	0.2725		

NOTES
UNLESS OTHERWISE SPECIFIED:

1. DIMENSIONING AND TOLERANCING PER ANSI Y14.5M-1982. MILLIMETERS UNITS
2. SURFACE TEXTURE PER ANSI B46.1-1978.

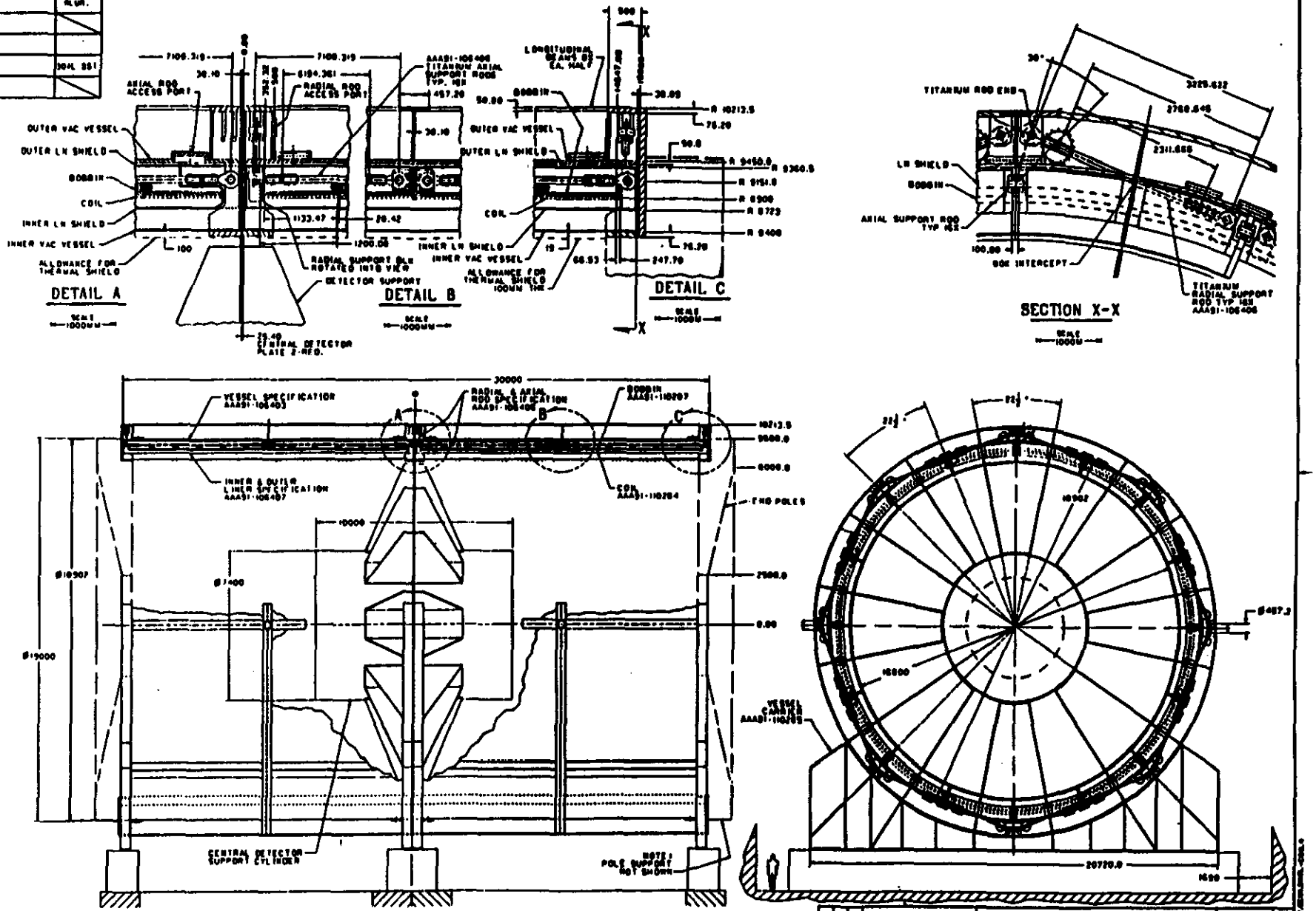

TAB NO.	DIM "X"	DIM "R" REF	NO. REQ.	ORIENTATION
-01	91.00	127.00	64	RADIAL
-02	245.84	281.82	54	AXIAL

NOTES
UNLESS OTHERWISE SPECIFIED:

1. DIMENSIONING AND TOLERANCING PER ANSI Y14.5M-1982. INCH UNITS USED.
2. SURFACE TEXTURE PER ANSI B46.1-1978.
3. SCREW THREADS PER ANSI B1.5-1973 AFTER NICKLE FLASH & SILVER PLATING PER QQ-S-365, TYPE I, GRADE A.
4. NICKLE FLASH & SILVER PLATE ALL BALL SURFACES PER Q-Q-S-365 TYPE I, GRADE A. (.0005 MIN. THICK). DIMENSIONS TO BE MET AFTER PLATING. (FLATS & CHAMFERS OPTIONAL).

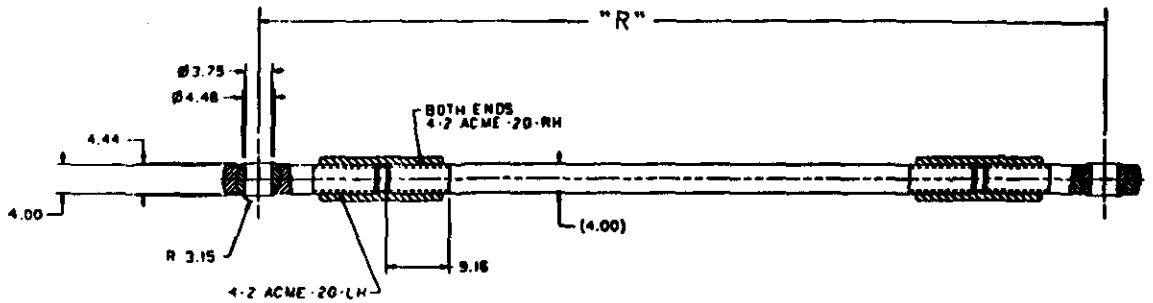

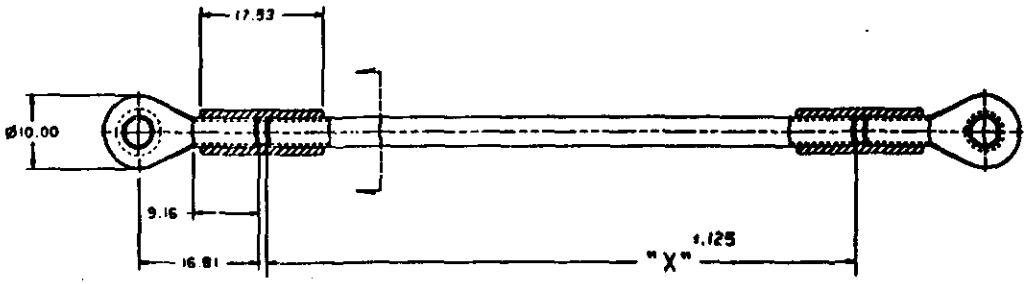

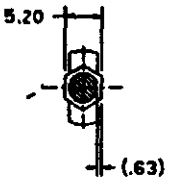

REFERENCE ONLY
NOT FOR FABRICATION
10-17-91

A	AP	BY	10/91		REVISED NO. OF AXIAL RODS

		COLD DRAWN OR FORGED A/R 6AL-4V TITANIUM	
NO REQD	PART/ALUM STK NO	DESCRIPTION/MATERIAL	SPEC NO / ITEM
DWN POSEY	S/M		
CHK			
APVD	10/91		
TYPE	DATE		

LAWRENCE LIVERMORE NATIONAL LABORATORY
MECHANICAL ENGINEERING DEPT
UNIVERSITY OF CALIFORNIA

CLASSIFICATION

THIS DOCUMENT IS THE PROPERTY OF THE UNIVERSITY OF CALIFORNIA LAWRENCE LIVERMORE NATIONAL LABORATORY. REPRODUCTION PROHIBITED WITHOUT THE PERMISSION OF THE MECHANICAL ENGINEERING DEPARTMENT.

[redacted]

MAJOR UNIT: COIL ASSEMBLIES 3.1.1.1
ASSEMBLY: COLD MASS SUPPORTS 3.1.1.1.4
DETAIL: RADIAL & AXIAL ROD SPECIFICATION
DRAWING NO: AAA91-106406-0A
COPY
SCALE 1/4 — 1/8 — 1/4
SHEET 1 OF 1

OFFICIAL USE

LN2 Thermal Radiation Shields

- Function
  - to provide a thermal radiation barrier to all LHe cooled surfaces so that heat load is minimized

- Requirements
  - enclose each half coil in a LN2 cooled radiation shield
  - allow easy access to potential high maintenance areas: superconducting splices, LHe circuit weld joints

We have chosen to use both LN shields and superinsulation

- **Performed comparison of LHe refrigeration required for three shielding scenarios:**
  - **superinsulation only**
  - **LN2 shields only**
  - **LN2 shields + superinsulation**

	SI only	LN2 cooled shield only	LN2 cooled shield + SI
Q heat load	1-10 watts per sq meter[1]	2.3 watts per sq meter[2]	.12 watts per sq meter[3]
Q total	**3.4 to 34 kw** need additional refrigeration	**7.8 kw** need additional refrigeration	**0.4 kw** existing refrigeration probably OK

Assumes:

3400 sq meter nominal LHe surface area

[1]SI heat load data taken from NRC-2 superinsulation graph - 60 layers

[2]Black body radiation from 80 to 4°K surface at emissivity of 1.0 is 2.3 watts/ sq meter

[3]6-12 layers of SI added to LN2 cooled shields reduces emissivity to approx. 0.05

Superinsulation: layers vs. heat flux

F I G U R E 2

Number of Layers and Heat Flux

Figure 2 illustrates the relationship between number of layers and heat flux for various packing densities (layers per inch) for conditions as shown. Because minimum Kp is achieved at a packing density of approximately 40 layers per inch and minimum K is achieved at a packing density of approximately 150 layers per inch, the chart presents data only within these limits.

In converting layers of NRC-2 into pounds per square foot, the yield factor of 581 ft²/lb. is approximately correct. Experience has shown that 60 to 80 layers per inch is a practical density to use. At 581 ft²/lb. of NRC-2, 60 layers will weigh approximately 0.11 pounds per square foot.

$\frac{.3\ BTU}{FT^2\text{-}HR} \sim \frac{1\ WATT}{M^2}$

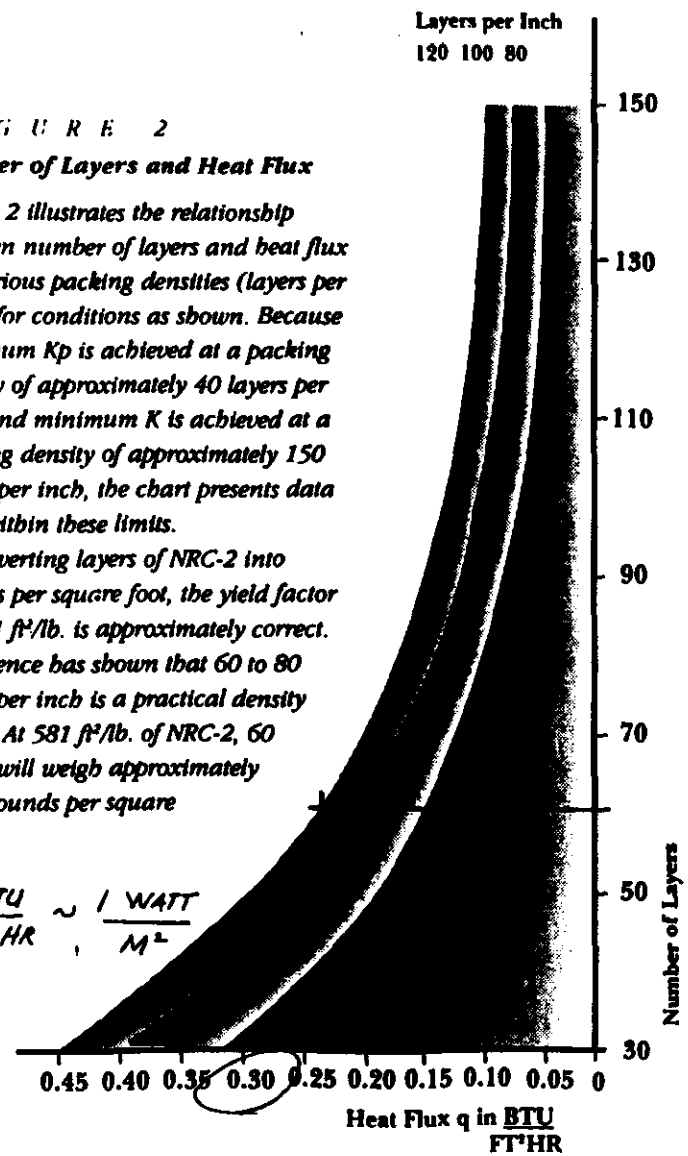

RMY-01
3/20/92

LN2 Shield Design

- 1/8" thick aluminum panel (6061-T651)
- cooled using LN2 flowing through a 1 3/8" square by 1.0" ID aluminum extrusion tube (1100-0) GMAW welded to panel
- nominal panel dimensions are 3m wide by 15m long
- panels inserted between inner vacuum vessel wall and half coil (inner panels) and outer vacuum vessel wall and half coil (outer panels)
- 40 panels required per half coil; 80 total (20 inner and 20 outer panels)
- panel to panel tube joints made utilizing automatic tube welder - butt to butt fusion weld
- panels are circumferentially wrapped with 60 layers of superinsulation prior to installation into the vacuum vessel

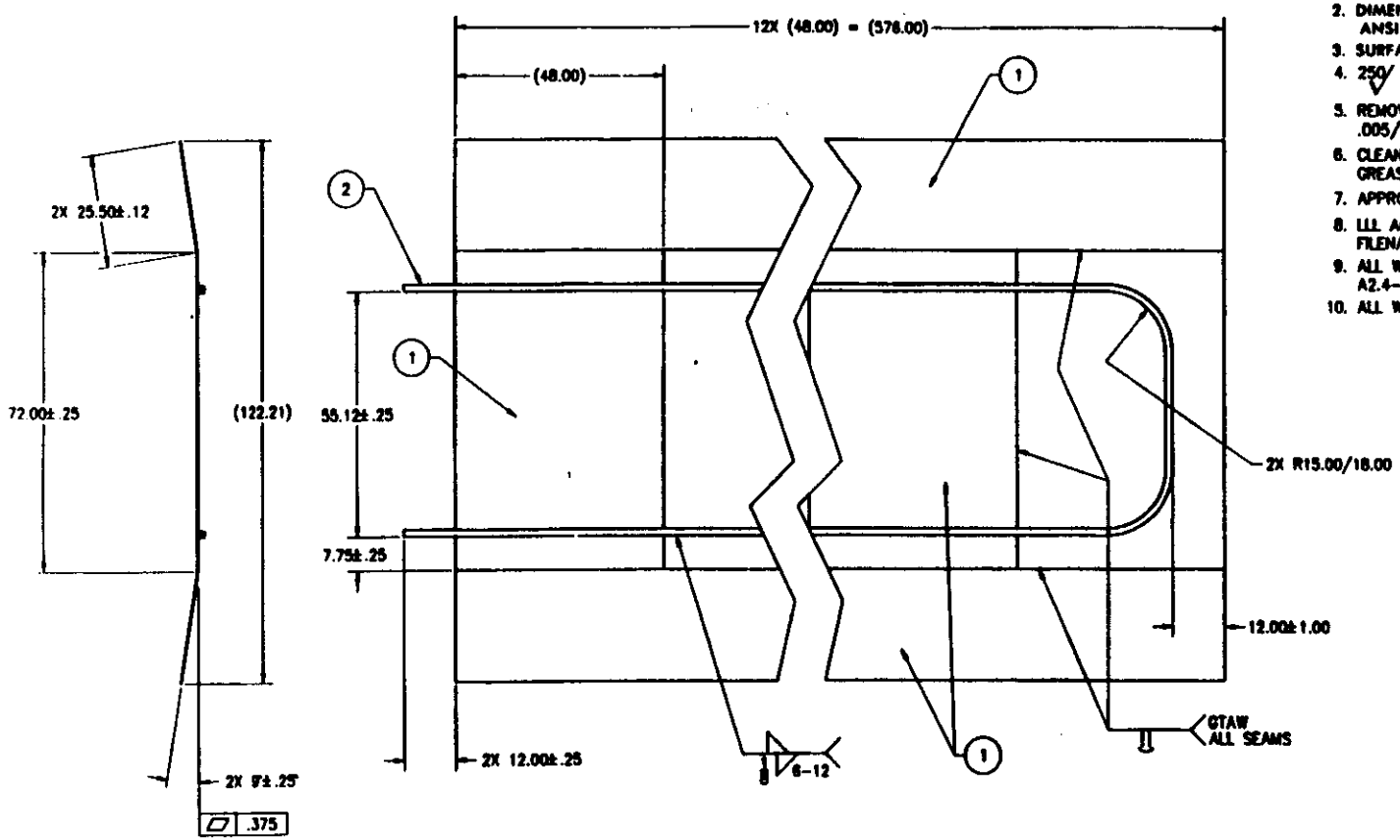

NOTES
UNLESS OTHERWISE SPECIFIED:

1. ALL DIMENSIONS ARE IN INCHES.
2. DIMENSIONING AND TOLERANCING PER ANSI Y14.5M-1982.
3. SURFACE TEXTURE PER ANSI B46.1-1978.
4. 250 FINISH ALL OVER.
5. REMOVE BURRS AND BREAK SHARP EDGES .005/.015.
6. CLEAN FINISHED PART OF ALL OIL, DIRT, GREASE, ETC.
7. APPROX. PANEL WEIGHT = 1000 LBS.
8. LLL AutoCAD(tm) REL. 11 USER FILENAME: 21010891
9. ALL WELD SYMBOLS ARE PER AWS/ANSI A2.4-76.
10. ALL WELD PER ANSI/AWS D1.2-83.

	AR		COOLING TUBE, 1.375" SQ. NOM. X 1" DIA. THRU,		2
			LENGTH AS REQUIRED 1100-0(ALUM)		
	AR	8301-11510	SHEET, .125" THICK 6061-T6(ALUM)		1
NO REQD		PART / SUB SYS NO	DESCRIPTION / MATERIAL	SPEC NO	ITEM

DWN W J WONG 3/92
CHK W J WONG 3/92
APVD R. YAMAMOTO 3/92

LAWRENCE LIVERMORE NATIONAL LABORATORY
MECHANICAL ENGINEERING DEPT
UNIVERSITY OF CALIFORNIA

CLASSIFICATION

THIS DOCUMENT IS THE PROPERTY OF THE UNIVERSITY OF CALIFORNIA LAWRENCE LIVERMORE NATIONAL LAB. REPRODUCTION PROHIBITED WITHOUT PERMISSION OF THE MECHANICAL ENGINEERING DEPARTMENT.

PROJECT GEM
SYSTEM MAGNET SUB-SYSTEM
TITLE RADIATION SHIELD
DRAWING NO AAA 92-101089-00
PROJECT NO 8827-66
SCALE 1=28.25 SHEET 1 OF 1

OFFICIAL USE

LN2 Shield Placement

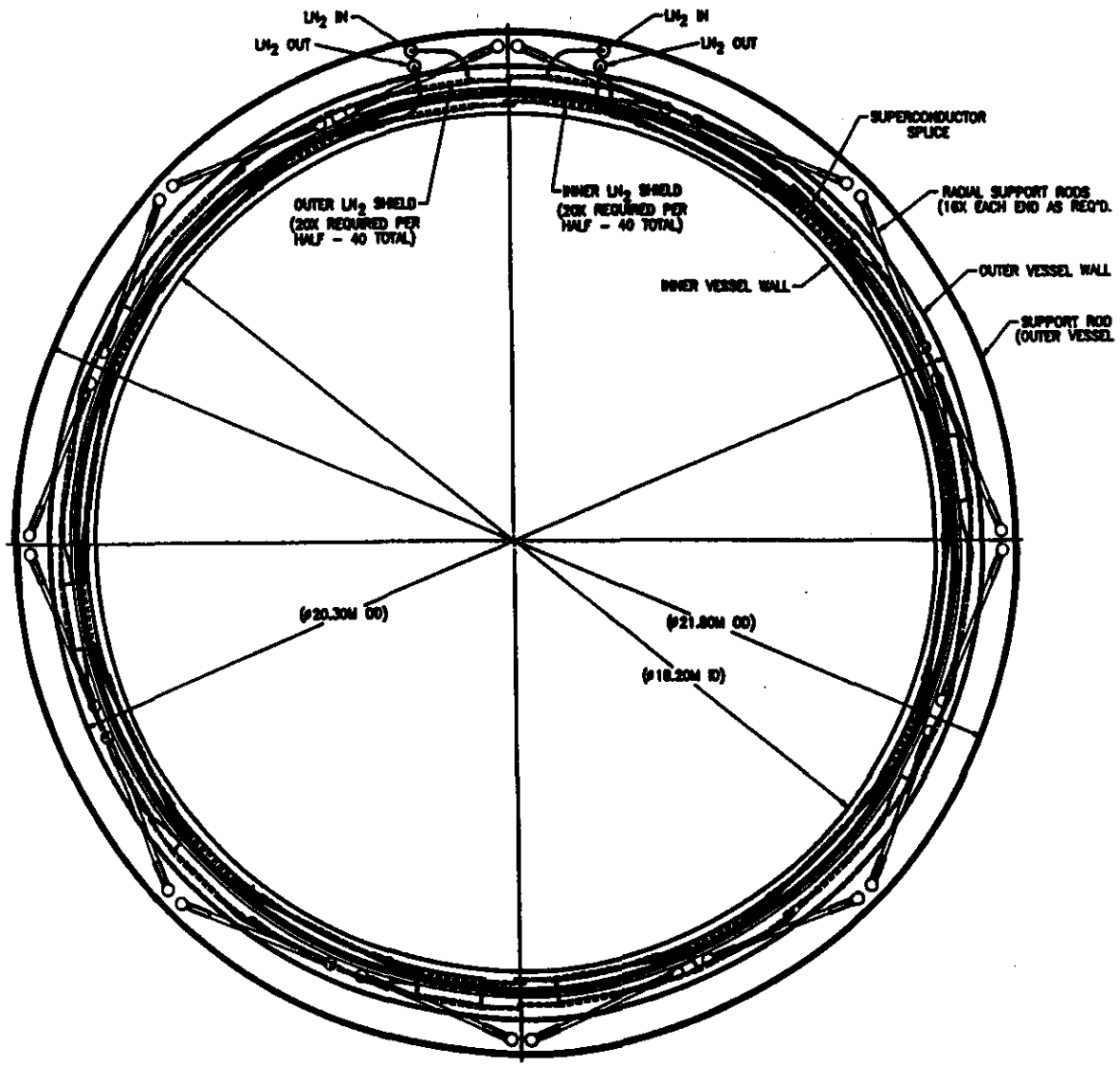

RMY-01
3/20/92

LN2 Shield Assembly

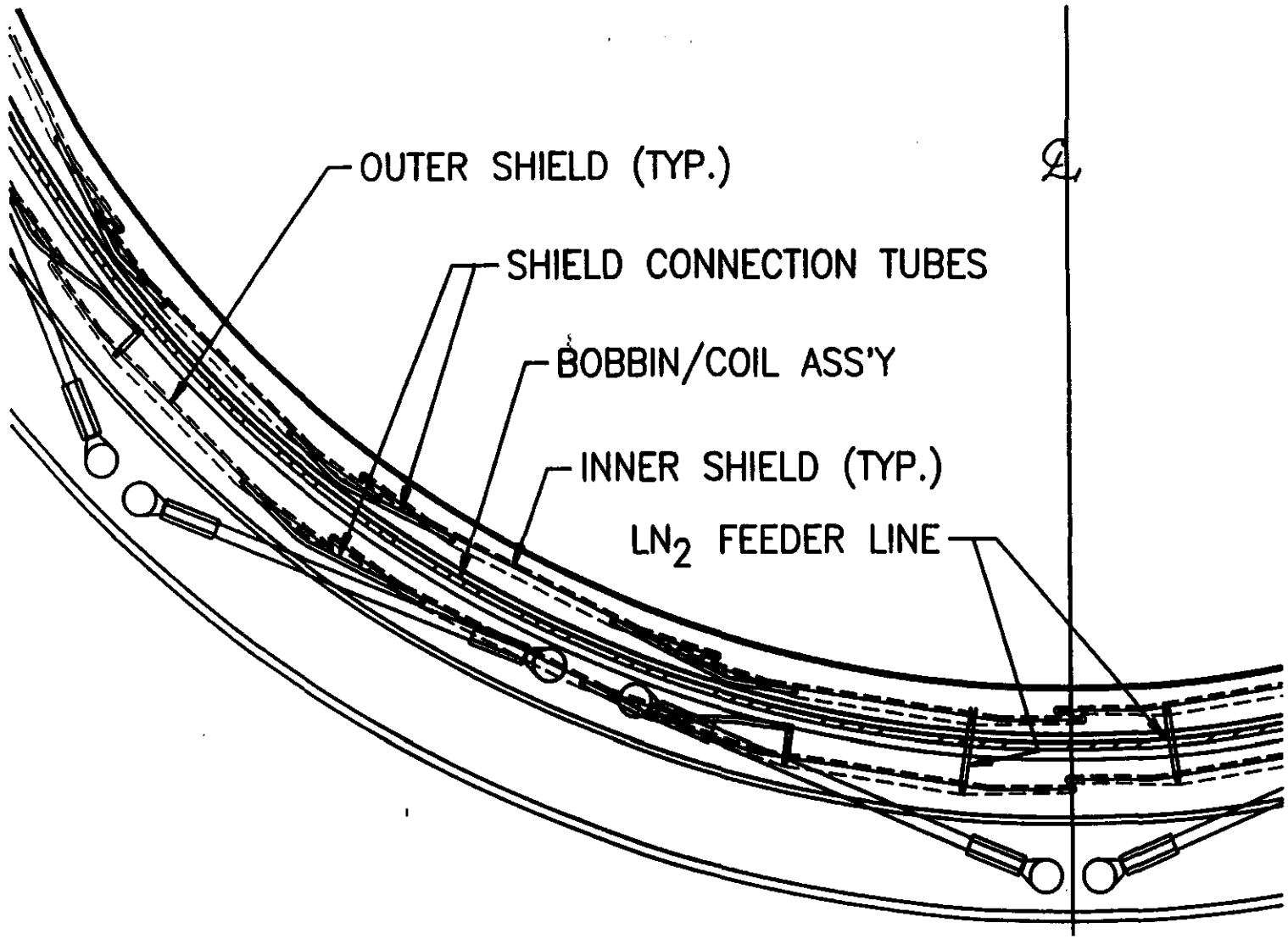

RMY-01
3/20/92

LN2 Shield: Superinsulation Wrapping

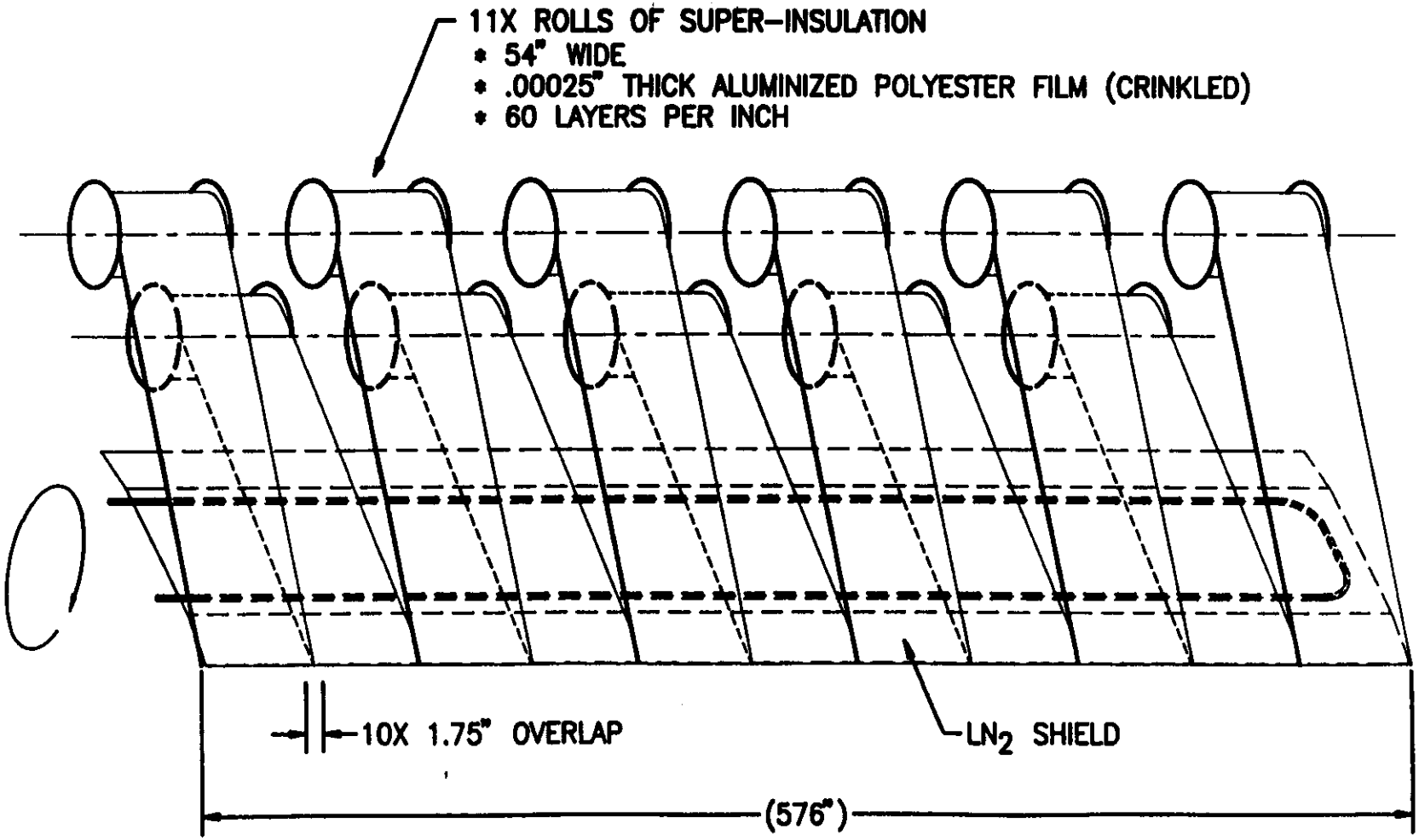

RMY-01
3/20/92

Assembly fixture for superinsulation

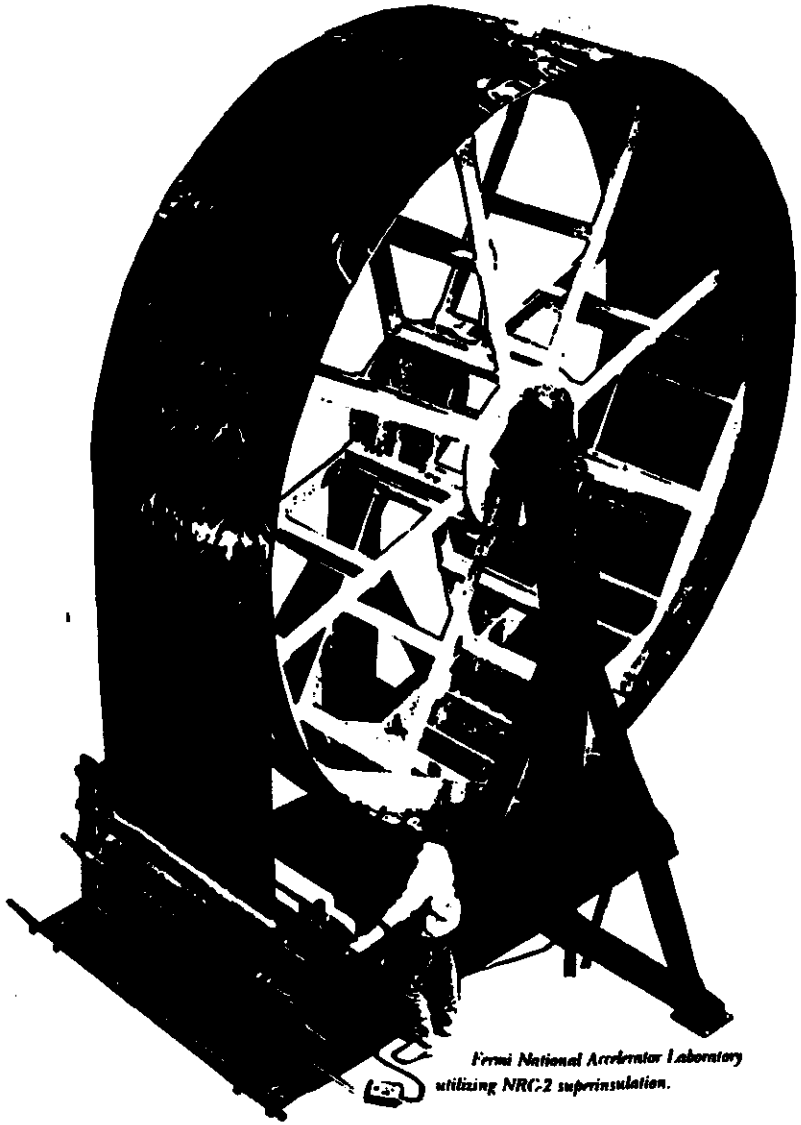

Fermi National Accelerator Laboratory utilizing NRC-2 superinsulation.

RMY-01
3/20/92

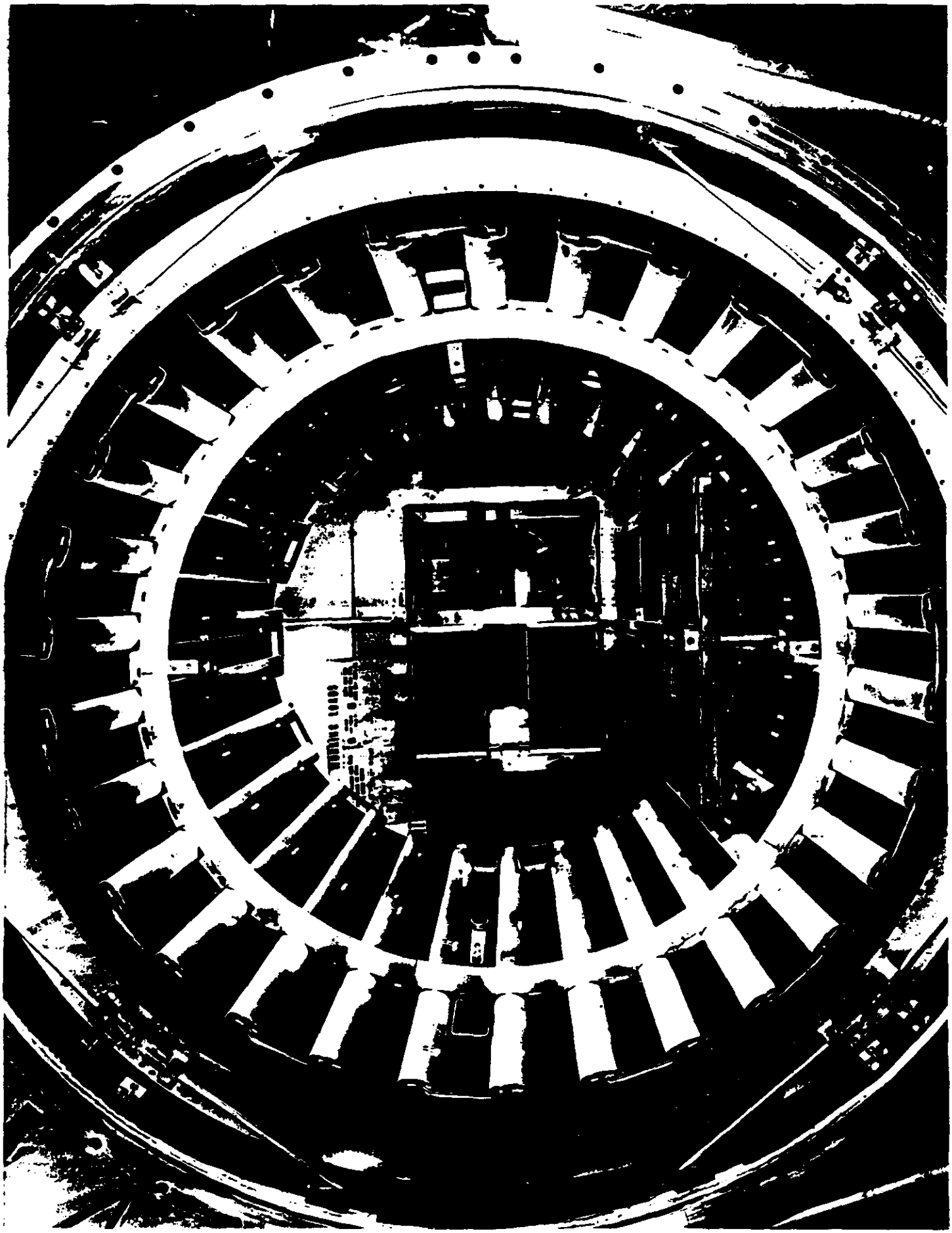

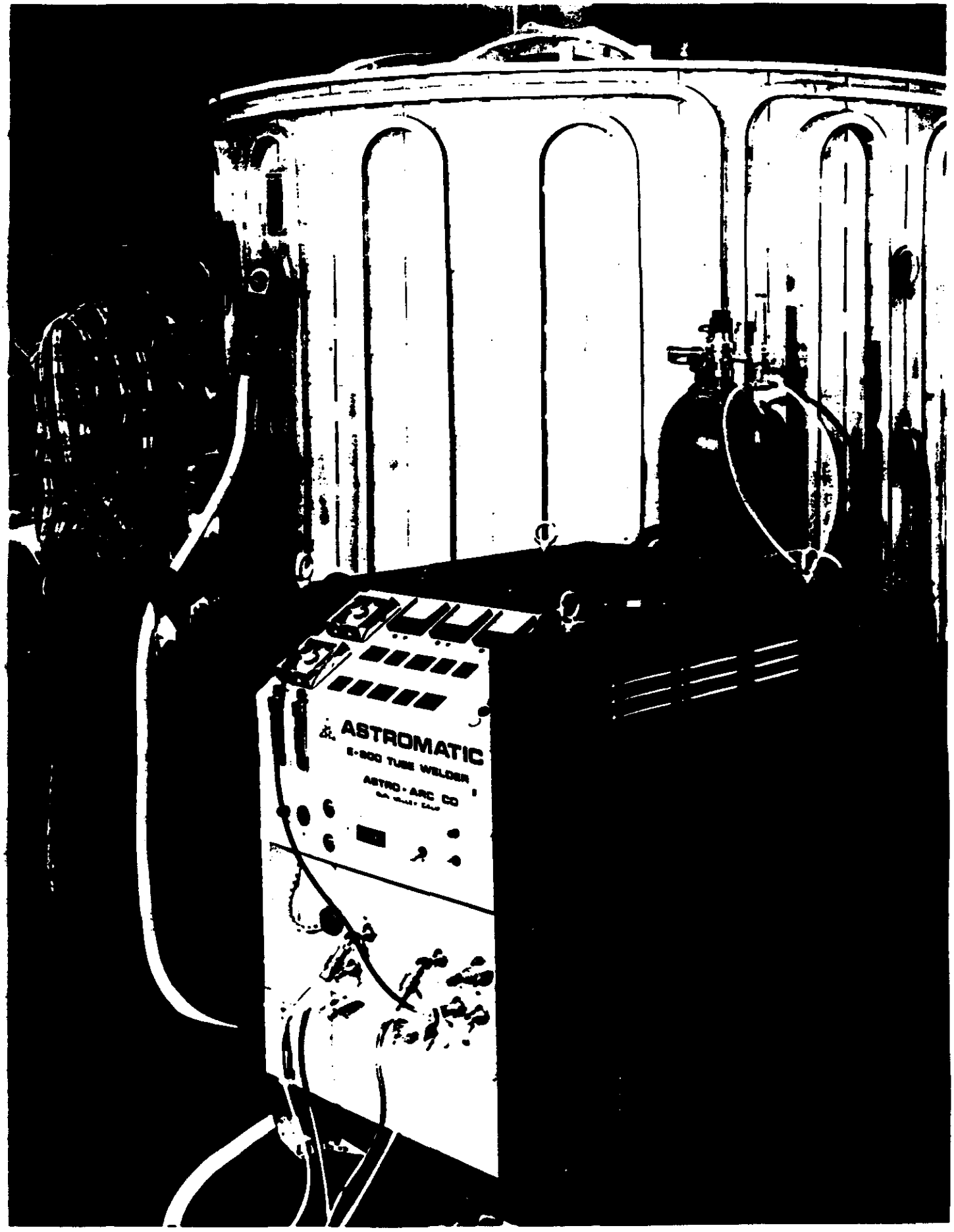
ASTROMATIC
E-500 TUBE WELDER
ASTRO-ARC CO

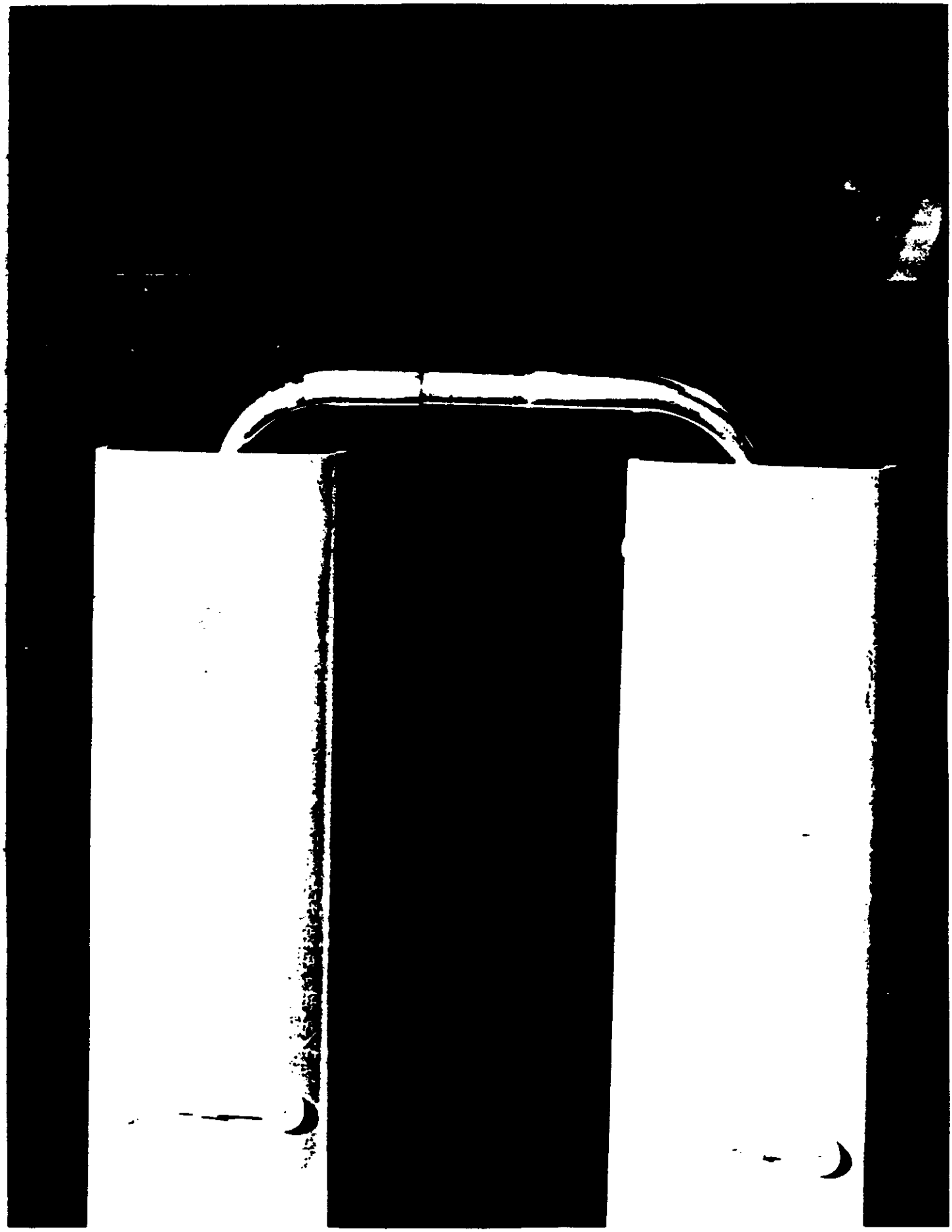

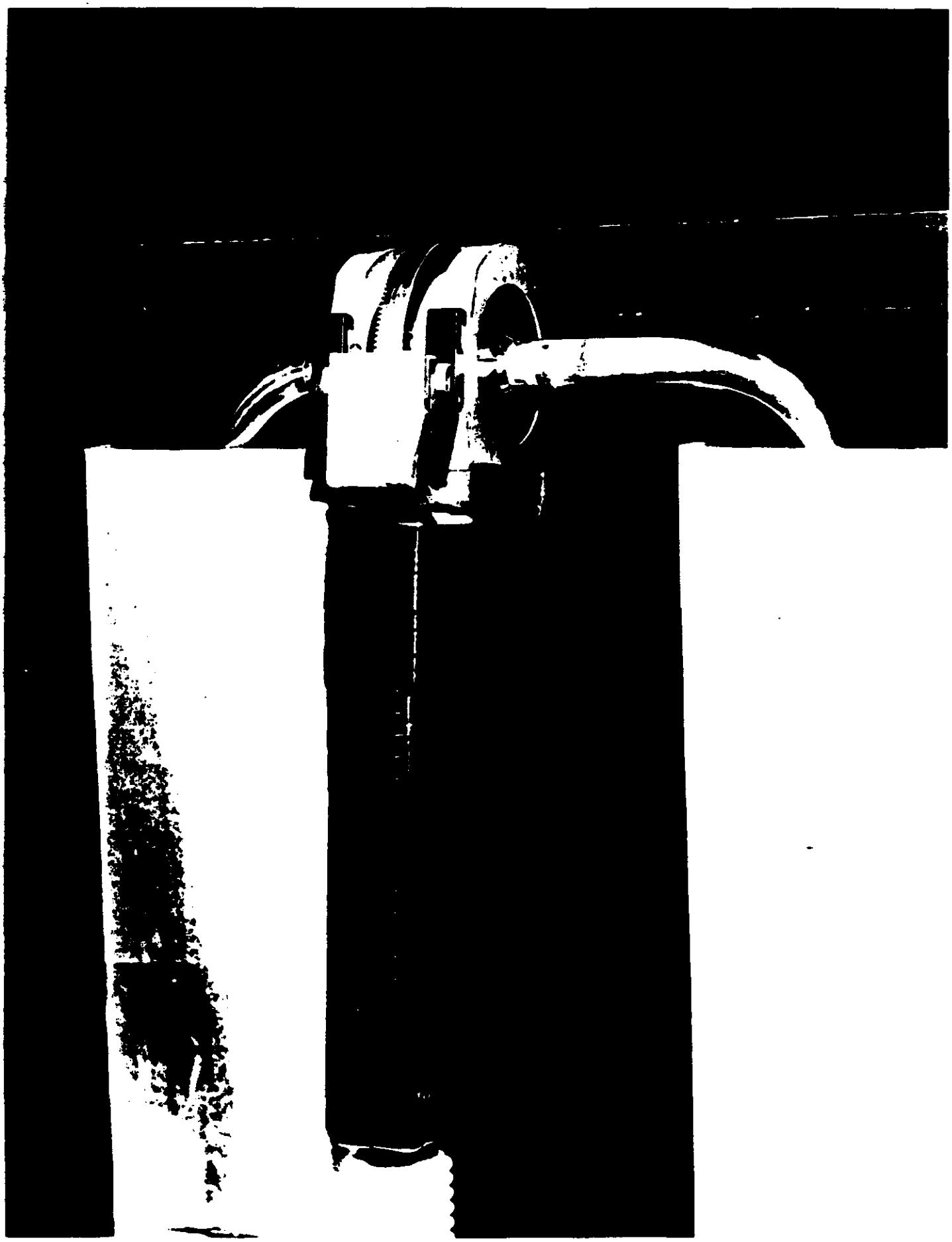

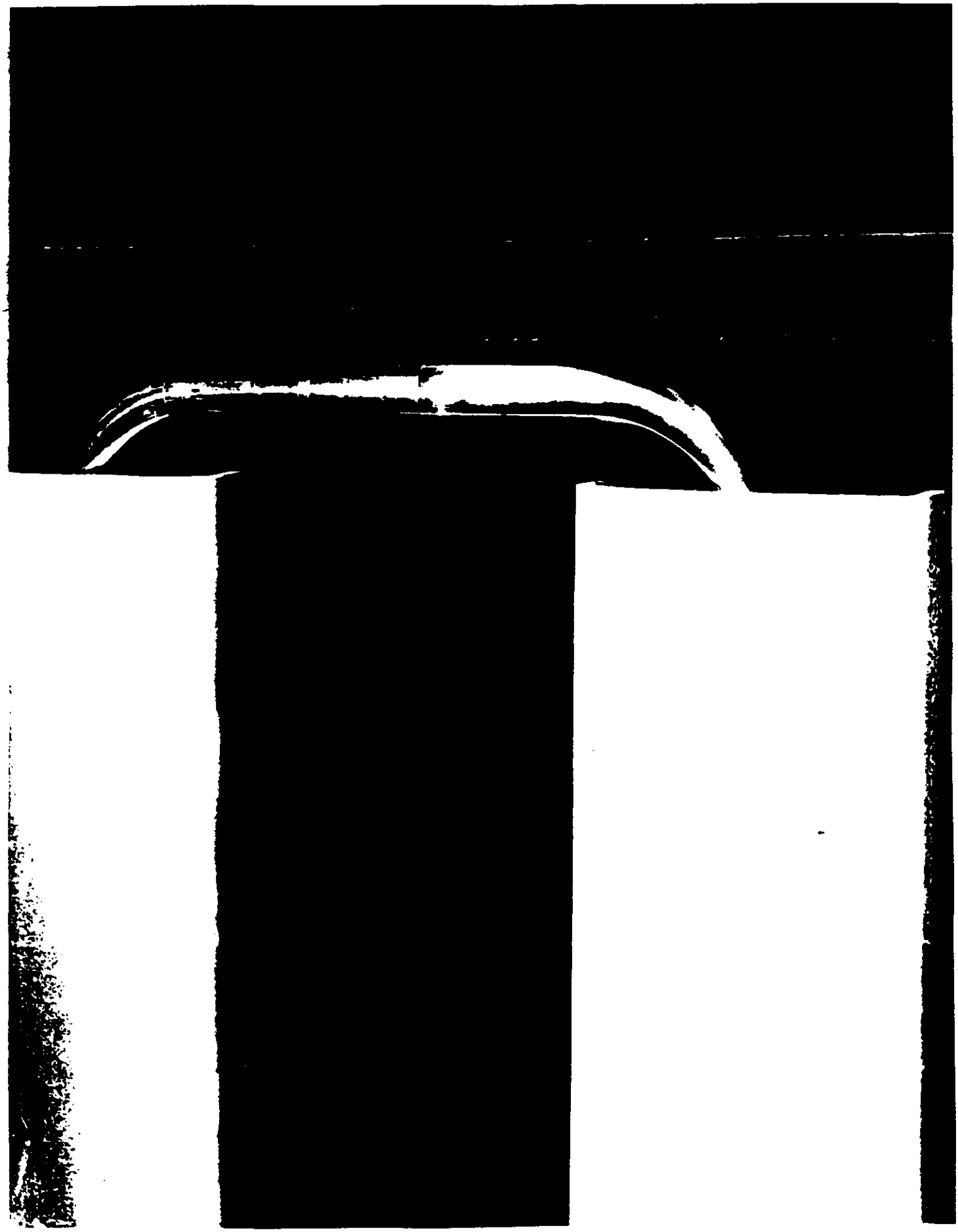

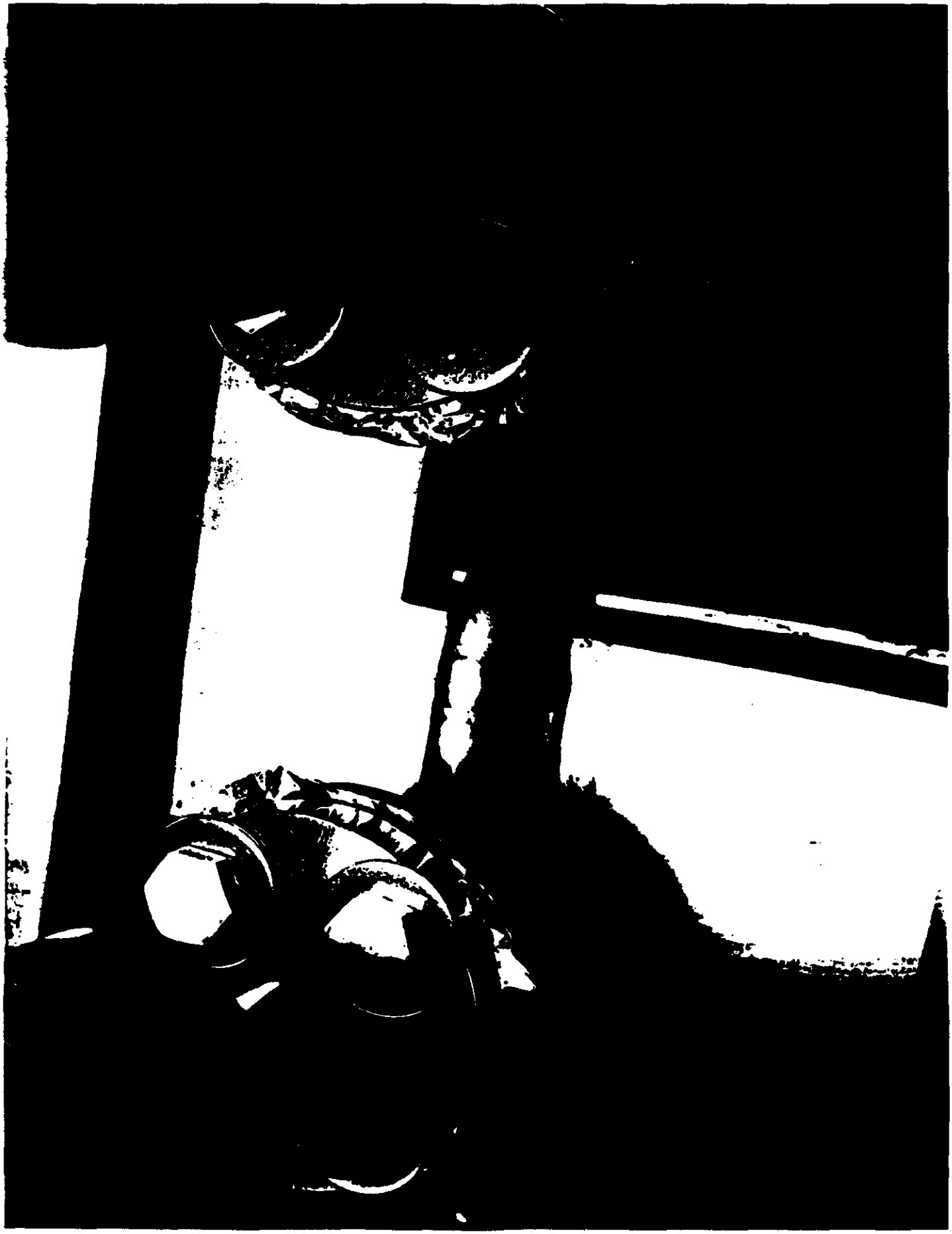

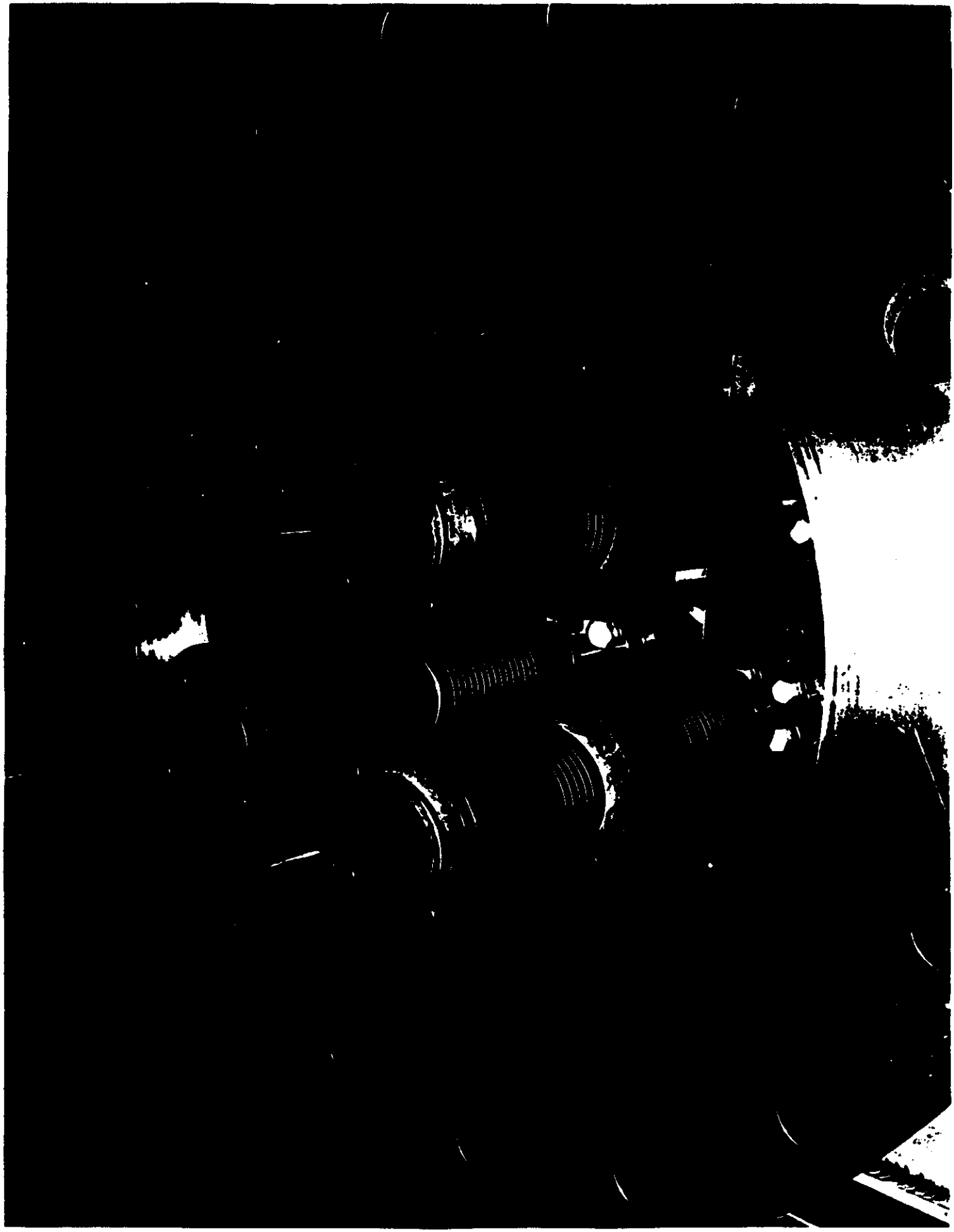

Conductor Splice Access Concept

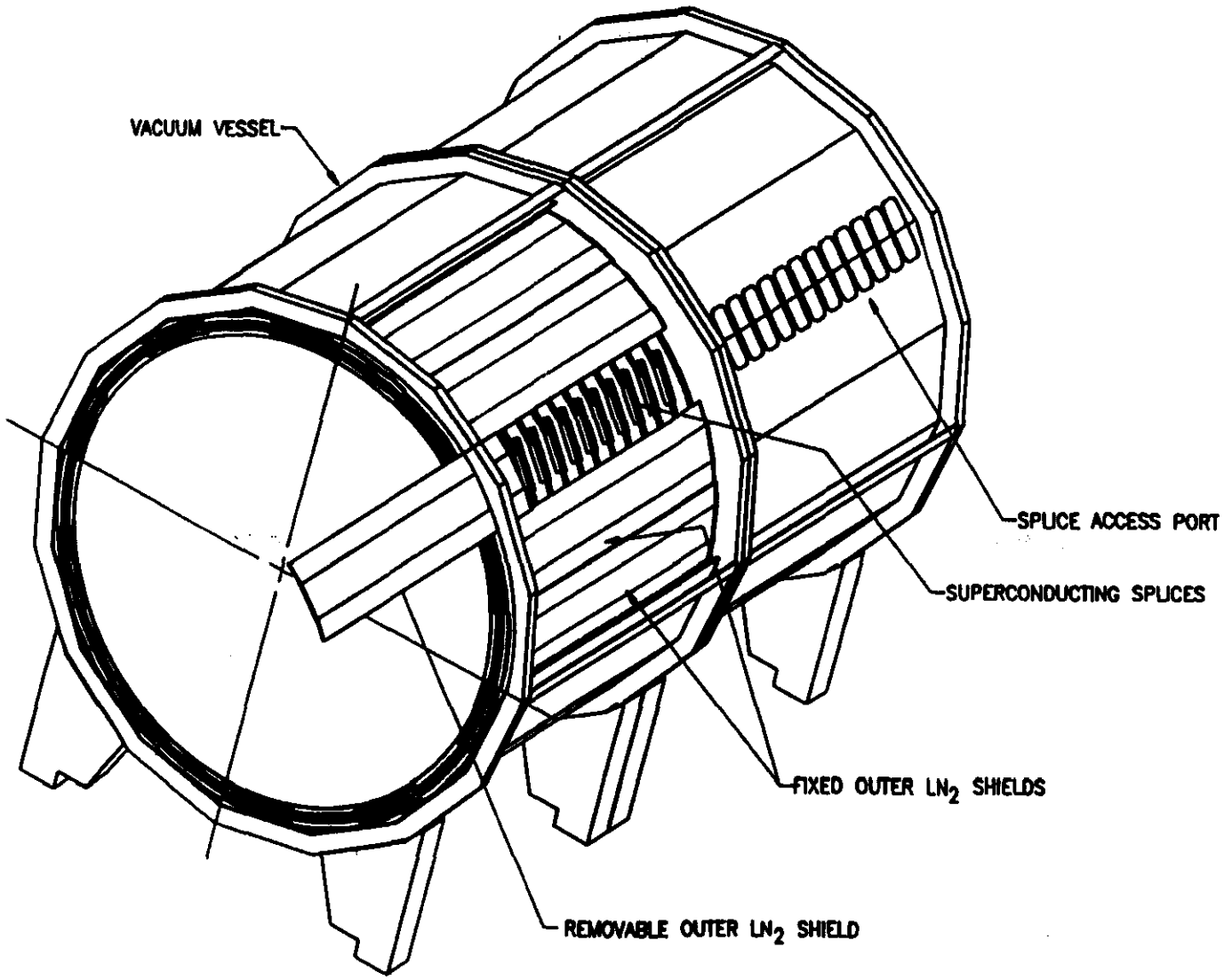

RMY-01
3/20/92

LHe NATURAL CONVECTION (THERMAL SYPHON) LOOP

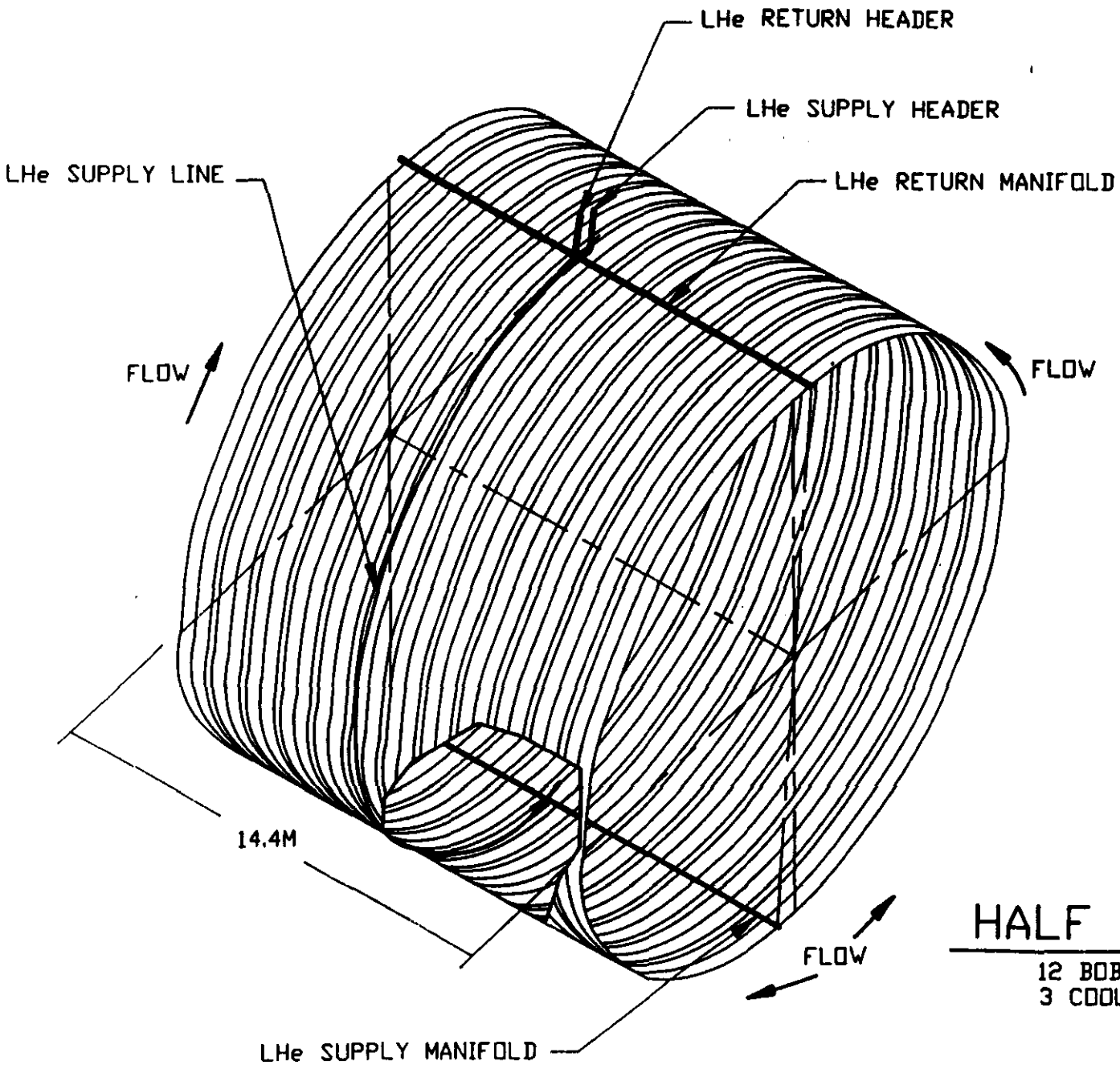

HALF COIL ASSEMBLY

12 BOBBIN SEGMENTS
3 COOLING TUBES PER SEGMENT

LHe MANIFOLD SYSTEM

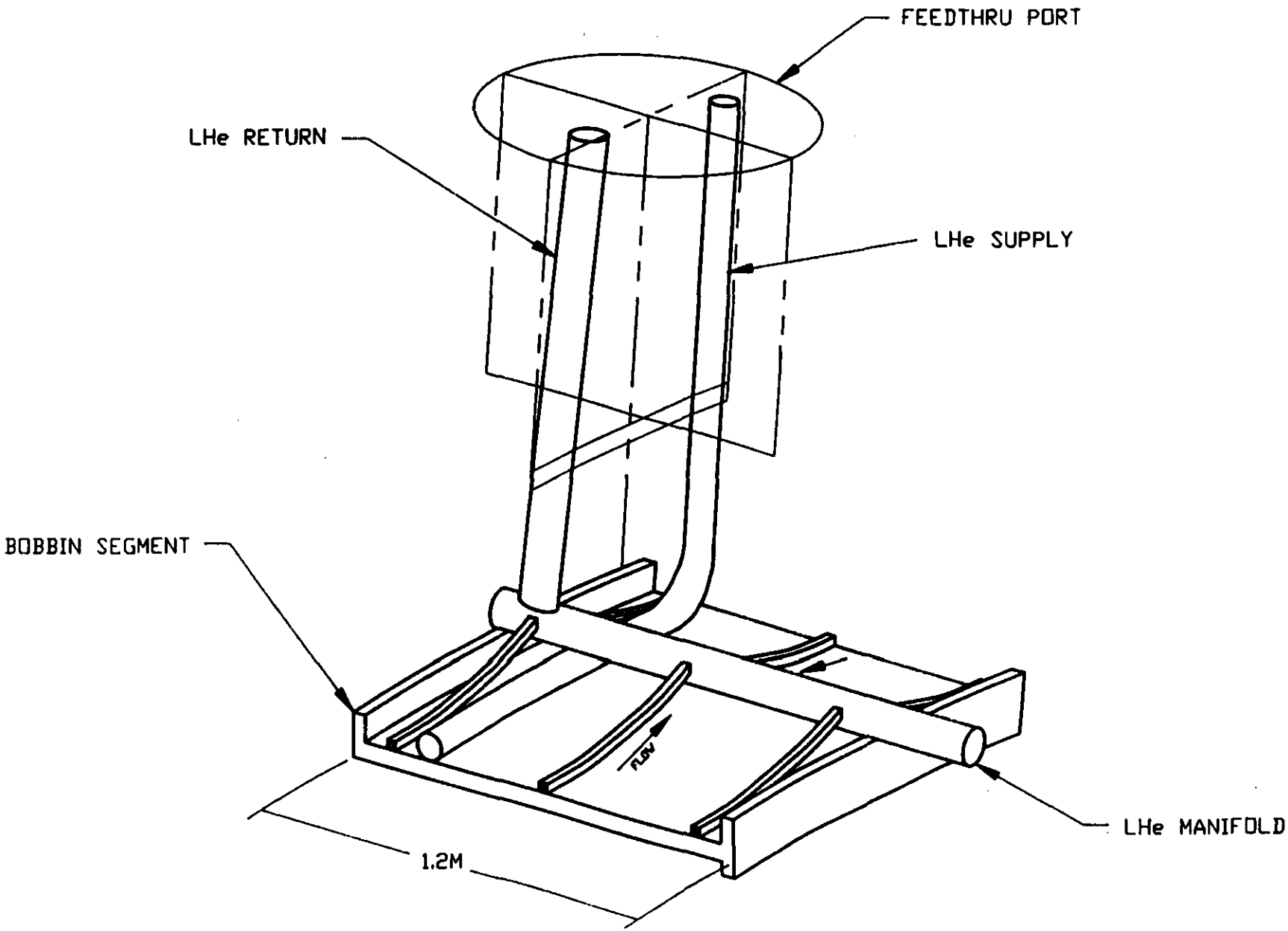

LHe MANIFOLD INTERFACE

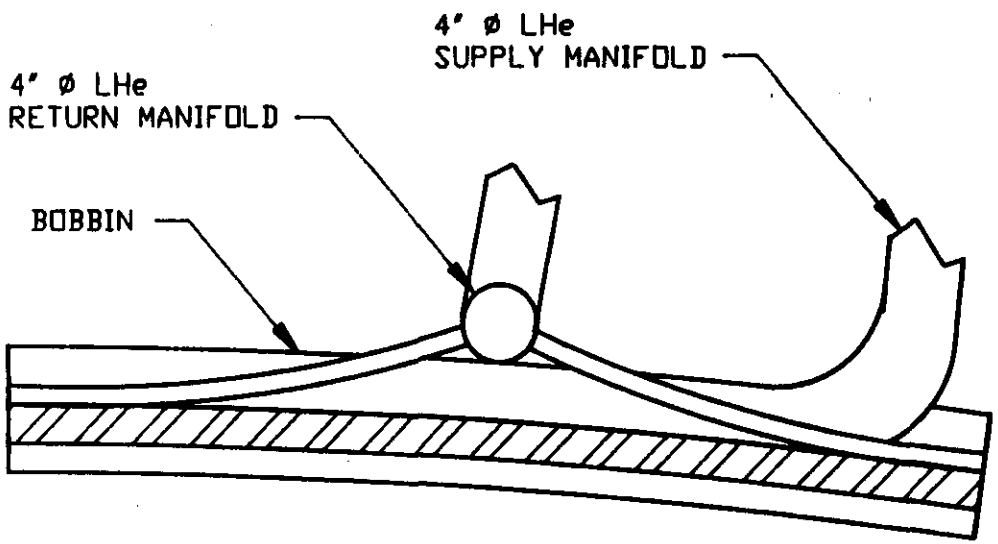

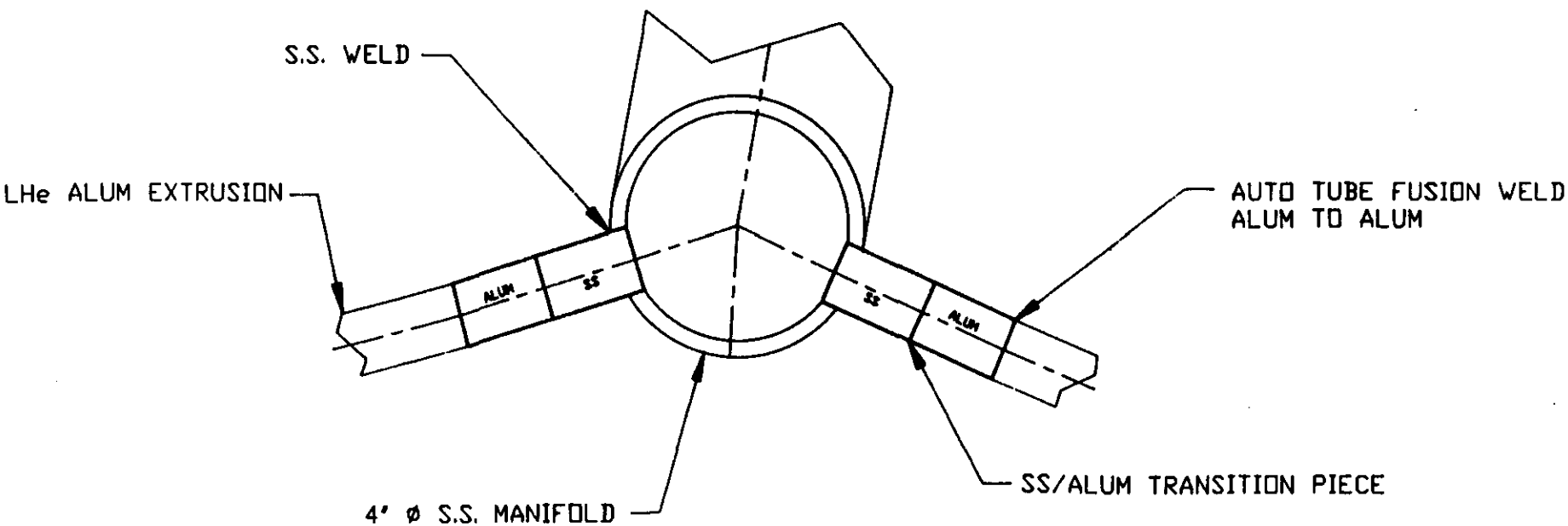

Magnet Assembly Approaches

- Function
  - to assemble the magnet subsystem components into an integrated system assembly ready for final installation and acceptance testing

- Requirements
  - provide integrated assembly so that the integrity and performance of the magnet subsystem is not compromised
  - meet schedule milestones and beneficial occupancy date (which promotes the use of parallel activities whenever possible)

Magnet Assembly Approaches (cont.)

- Three assembly approaches have been identified:
  - vertical assembly with high component lifts
  - vertical assembly with no high component lifts
  - horizontal assembly

Half Coil Assembly

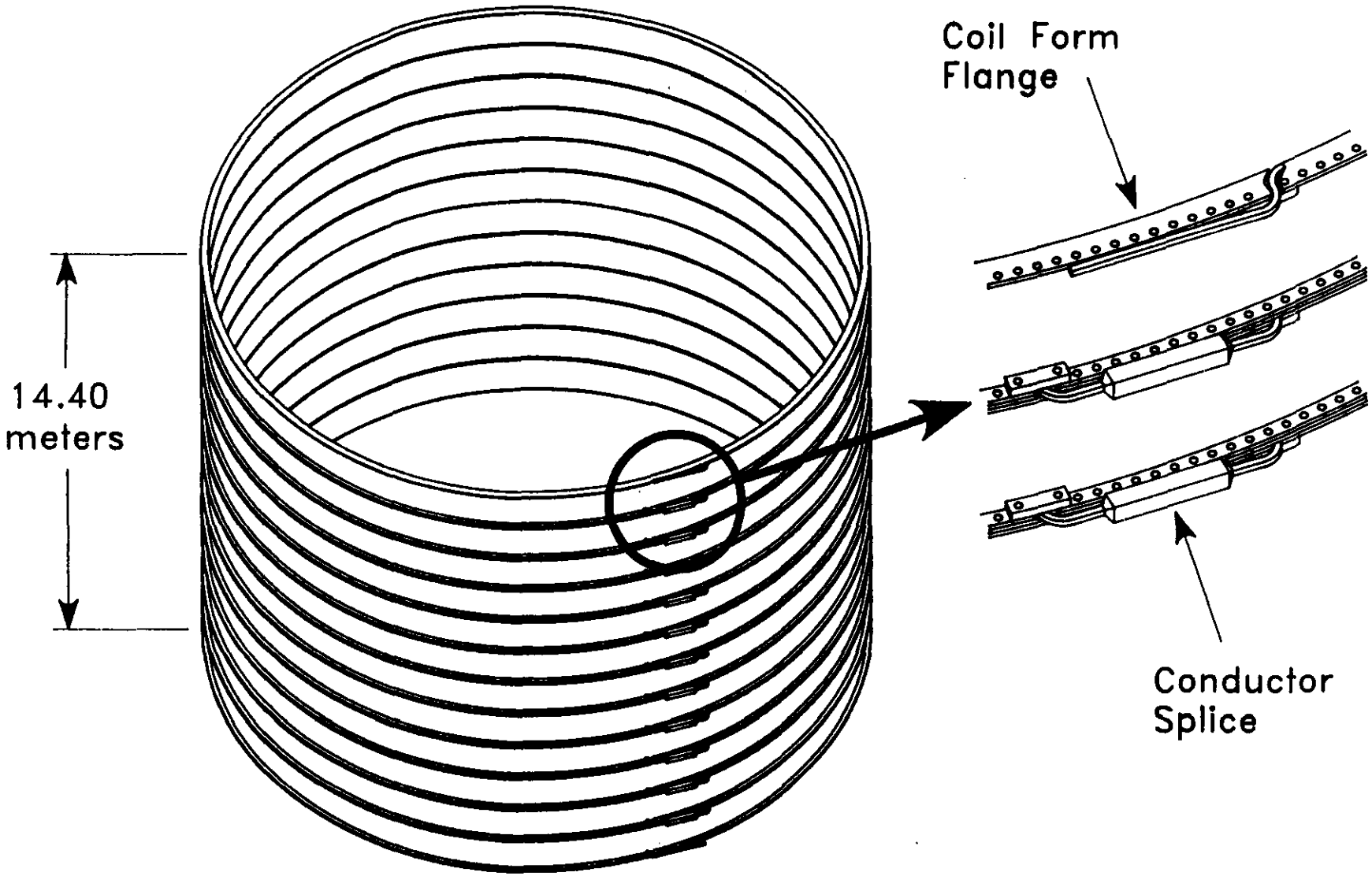

12 Coil Segments Totaling
228 Conductor Turns

Half Coil Insertion Into Vac. Vessel

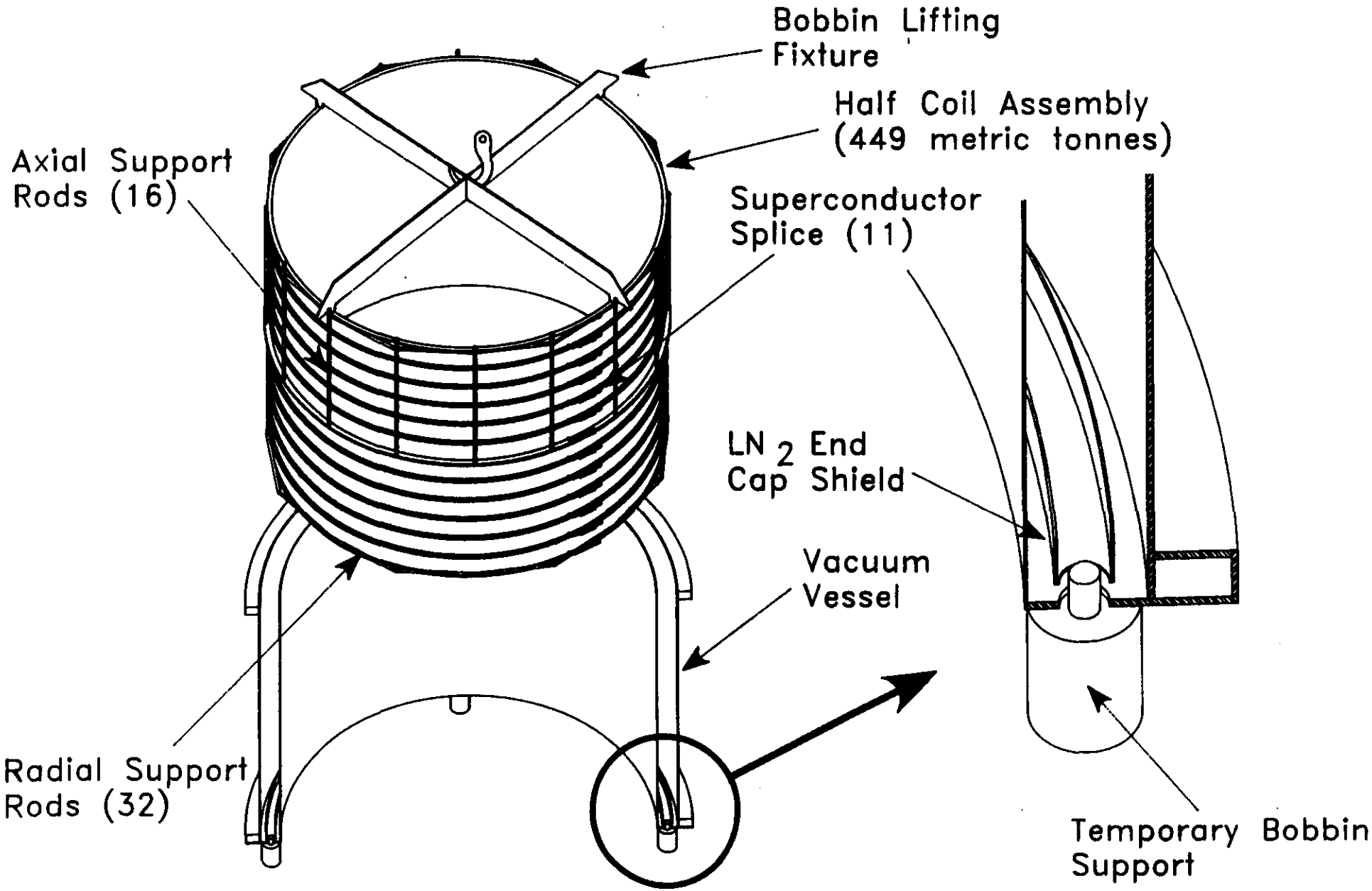

Half Coil–Vac. Vessel S–Assembly

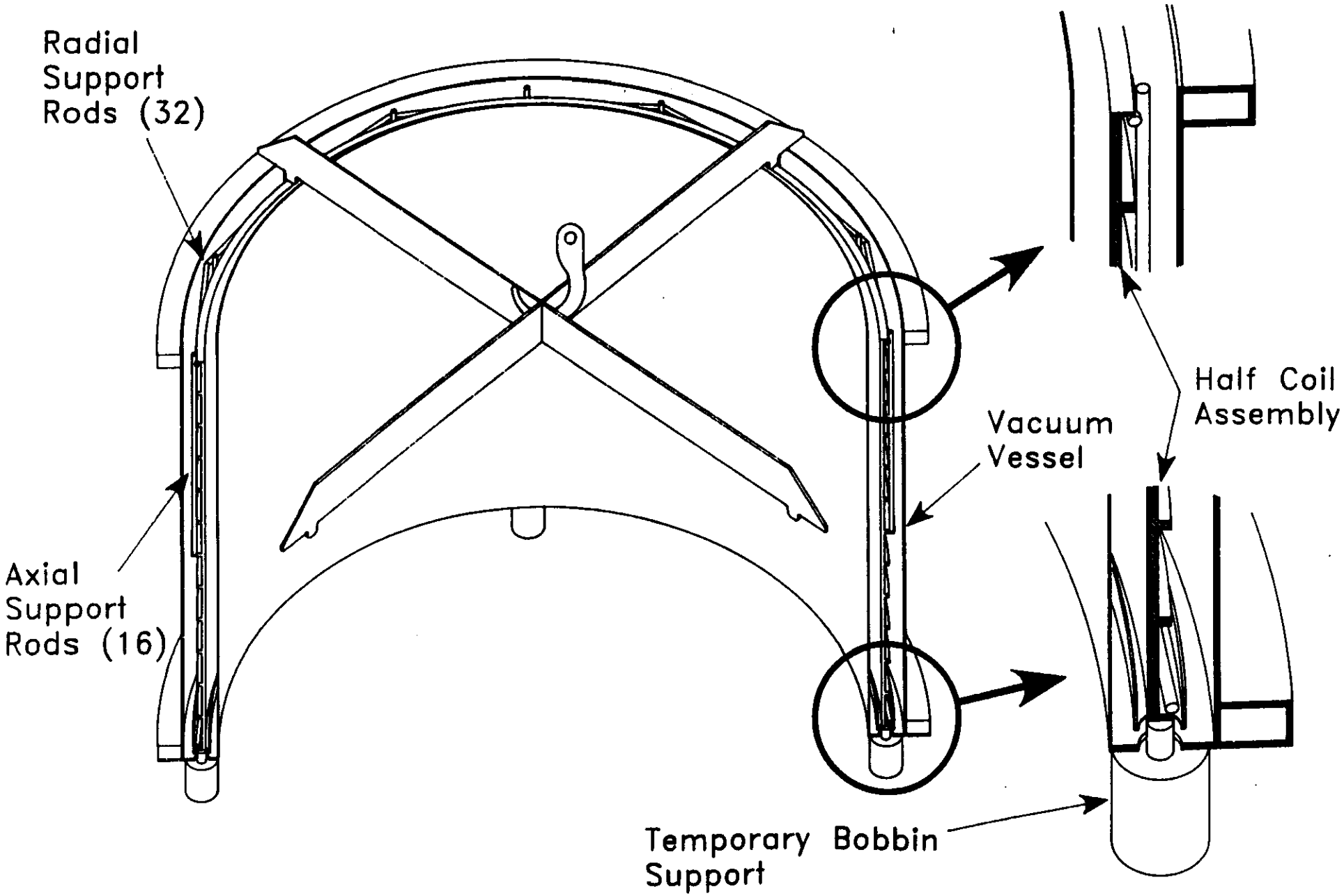

LN_2 Panel Insertion

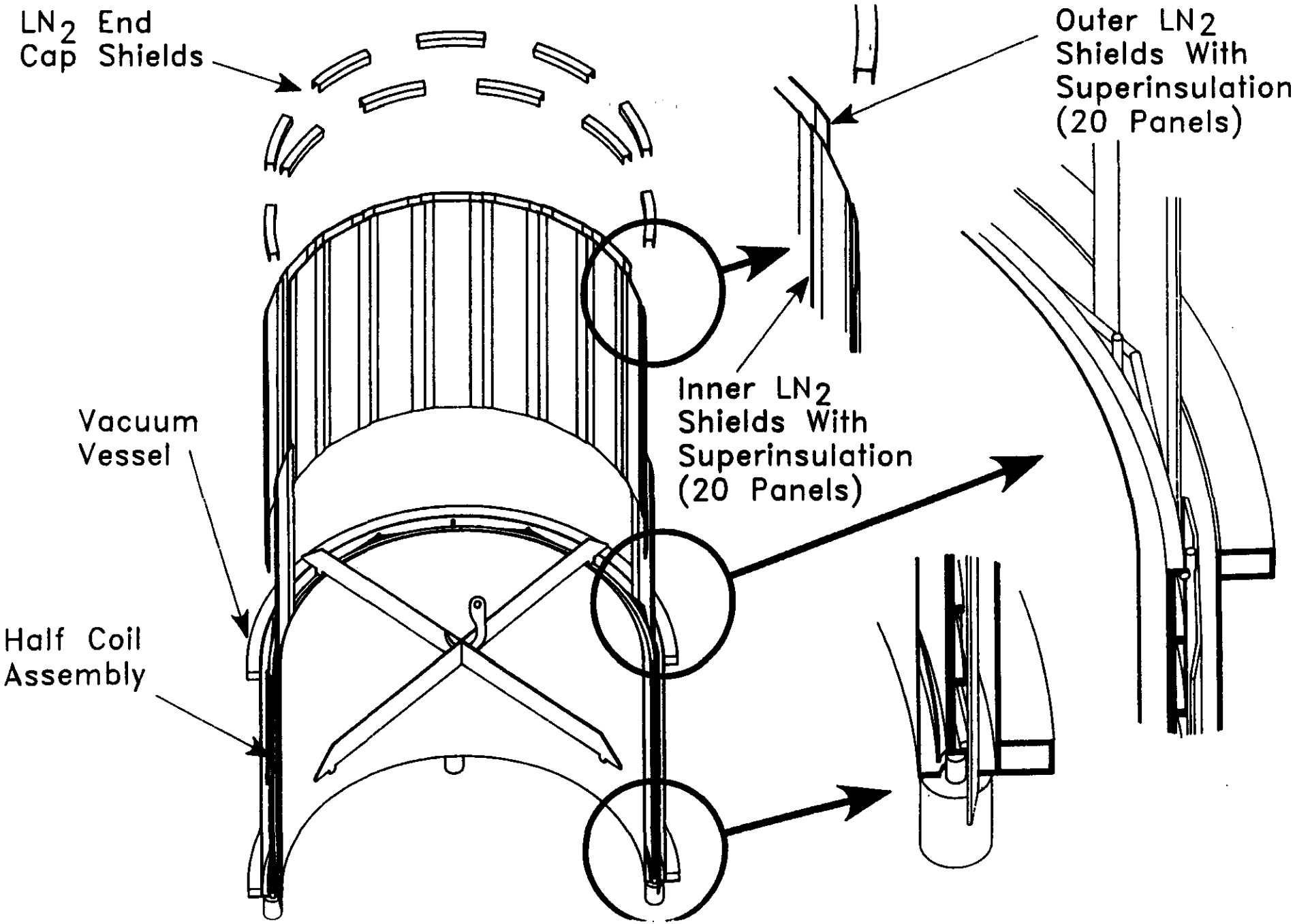

Vertical Assembly with High Lifts

- Advantages
  - allows parallel fabrication of the vacuum vessel using standard construction techniques
  - provides cleanest environment for coil after insertion into the vacuum vessel due to the minimal amount of closeout welding required
  - no major overhead welds required
  - no axial closeout welds required

- Disadvantages
  - high lift of completed half coil assembly required for insertion into the completed vacuum vessel
  - magnet must be rotated 90° prior to installation into the underground detector hall
  - accessibility to cold mass supports may be a concern; support rods must be checked for pretension after magnet rotation

Vertical Magnet Assembly - No High Lifts

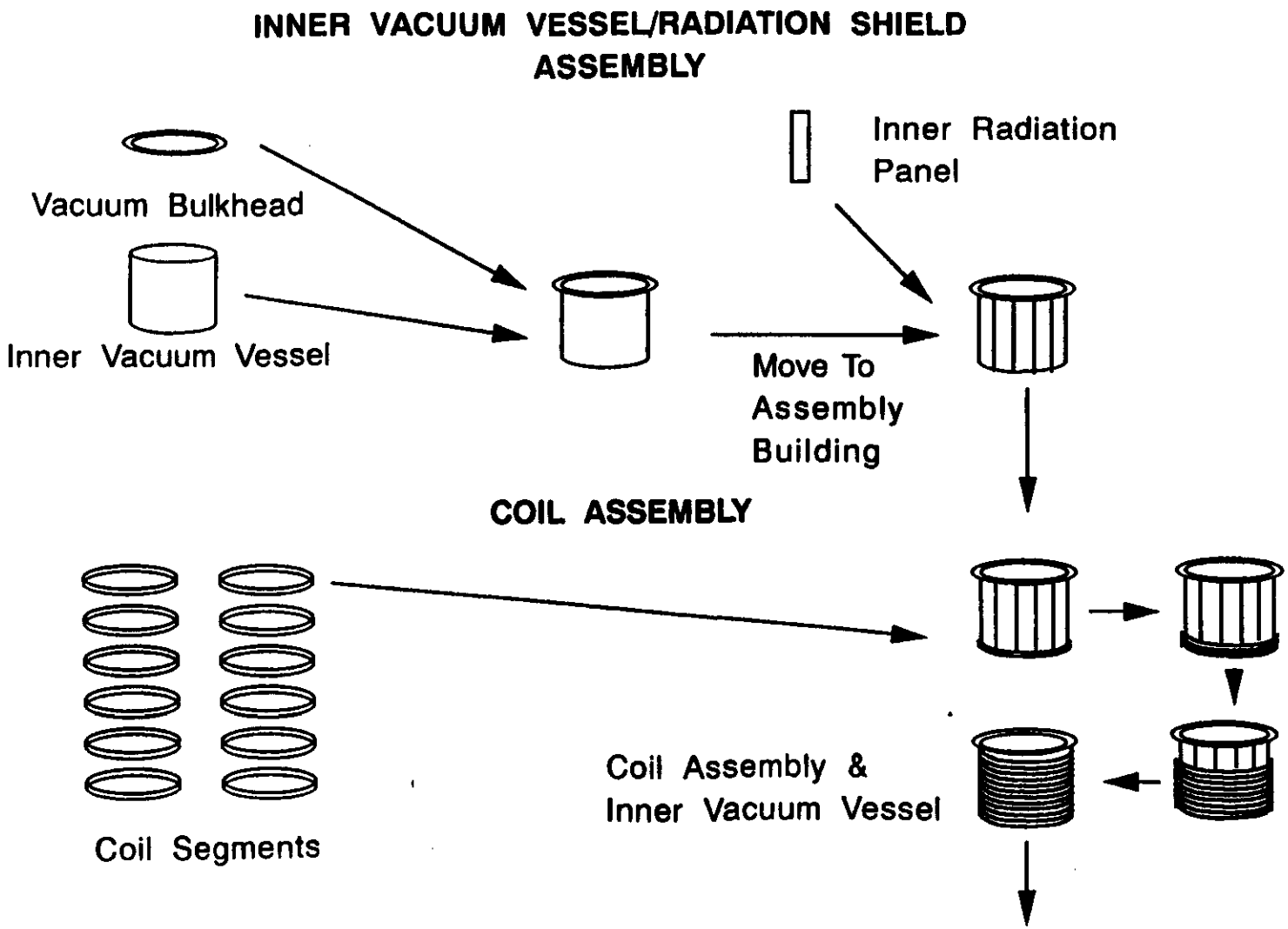

RMY-01
3/20/92

Vertical Magnet Assy - No High Lifts (cont)

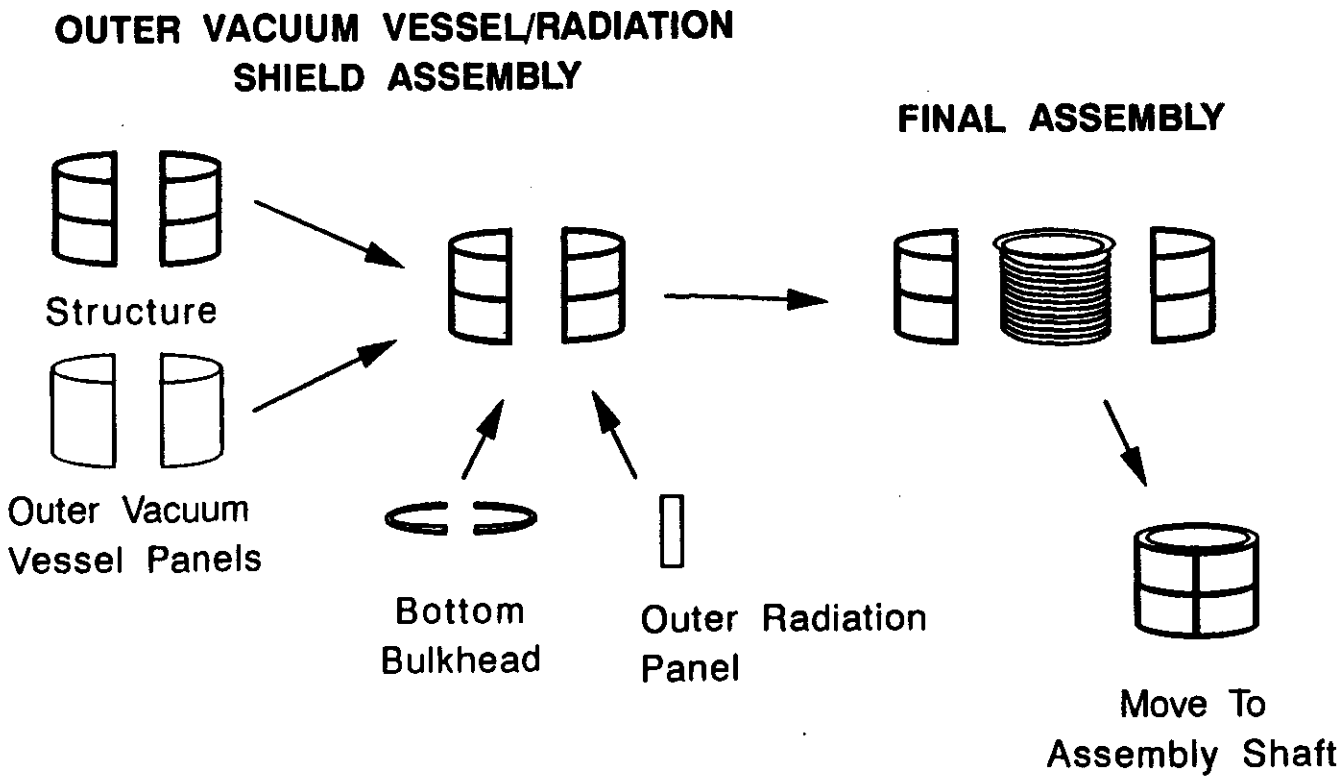

RMY-01
3/20/92

Vertical Assembly with No High Lifts

- Advantages
  - no high lifts of components required for assembly
  - no major overhead welds required

- Disadvantages
  - magnet must be rotated 90° prior to installation into the underground detector hall
  - coil is subject to more welding and consequently a less clean environment (superinsulation contamination, etc)
  - requires extensive closeout welds: two full length axial welds on vacuum vessel, two circumferential welds on end bulkhead flanges
  - requires a fixture to support inner vacuum vessel in assy building so that a coil segment can pass under
  - requires different type of weld joint for top and bottom bulkhead flanges to eliminate overhead welds
  - more series assembly is required

Horizontal Assembly

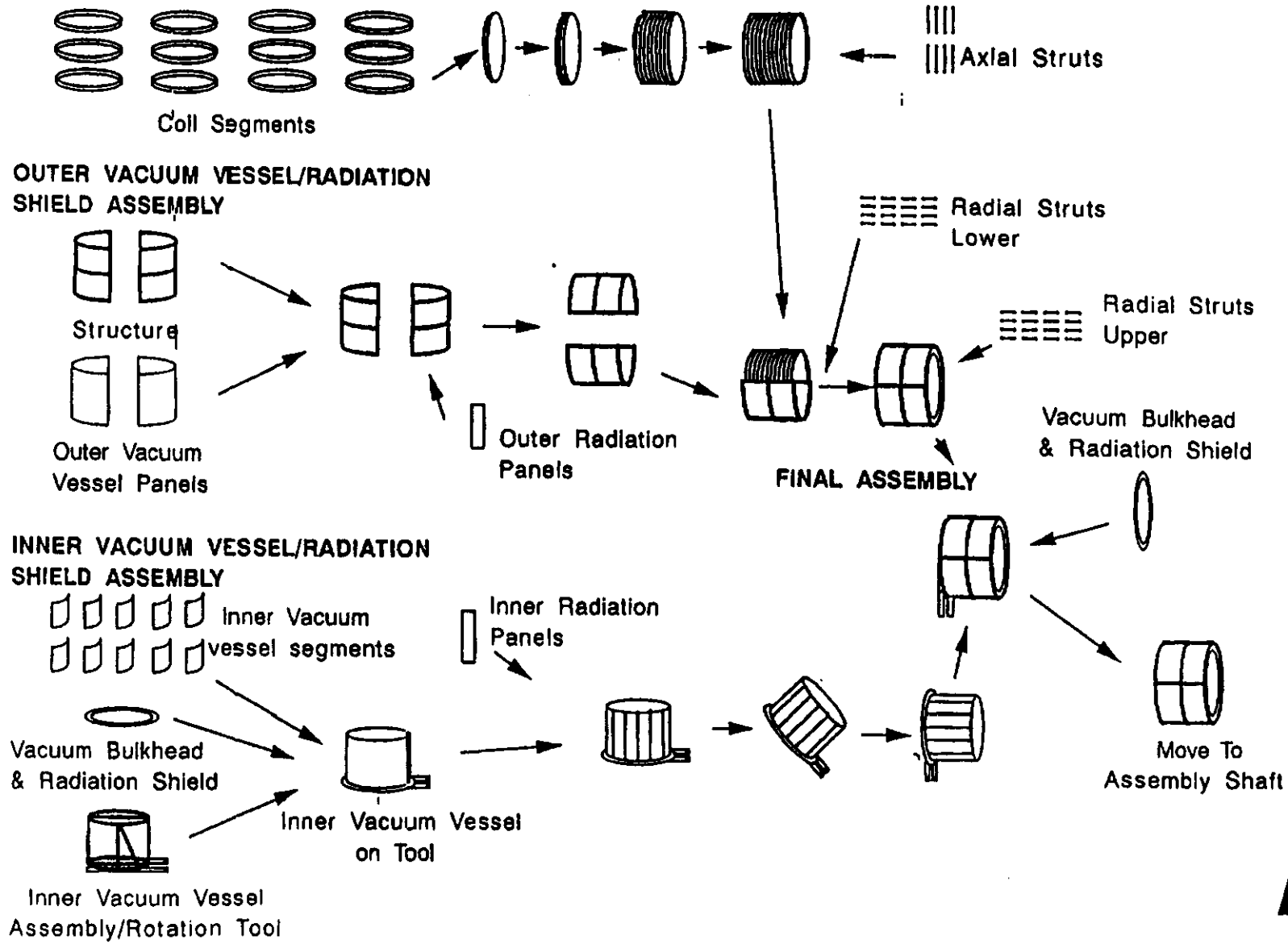

RMY-01
3/28/92

Horizontal Assembly

- Advantages
  - completed magnet assembly does not require rotation
  - no high lifts of components required for assembly
  - good accessibility for connecting and adjusting radial and axial support rods
  - no major overhead welds required
- Disadvantages
  - requires extensive closeout welds: two full length axial welds on vacuum vessel, three circumferential welds on end bulkhead flanges
  - coil is subject to more welding and consequently a less clean environment (superinsulation contamination, etc)
  - dimensional tolerances of vacuum vessel may be more difficult to achieve using this construction methodology
  - bolting of coil segments requires work at many levels
  - requires major fixture for assembly, rotation and insertion of the inner vacuum vessel and inner radiation shields

Superconducting Super Collider

Forward Field Shaper

Joel Bowers

Lawrence Livermore National Laboratory
April 1, 1992

JMB-15
3/27/92

Overall goals and requirements

- Magnetic field shaping
  -determines size, shape, and material

- Forward Field Shaper support
  -1000 tons (cantilevered)

- End cap muon detector support during installation
  - 16 x 10 tons (cantilevered)

- Tight alignment tolerances, not yet finalized

Major design parameters

- 20 ea x 55 ton segment cast steel solid cone
- Tie rod or tension cable stack support
- Cantilevered off end pole support structure
- Mostly low carbon steel support structure
- Possibly stainless steel radial stiffeners
- Each assembly
  - resists magnetic load of about 10 million pounds
  - transportable, free standing structure
  - bears on ends of vacuum vessel

- Each structure weighs about 2000 tons
- Assembly with field shaper weighs about 3000 tons

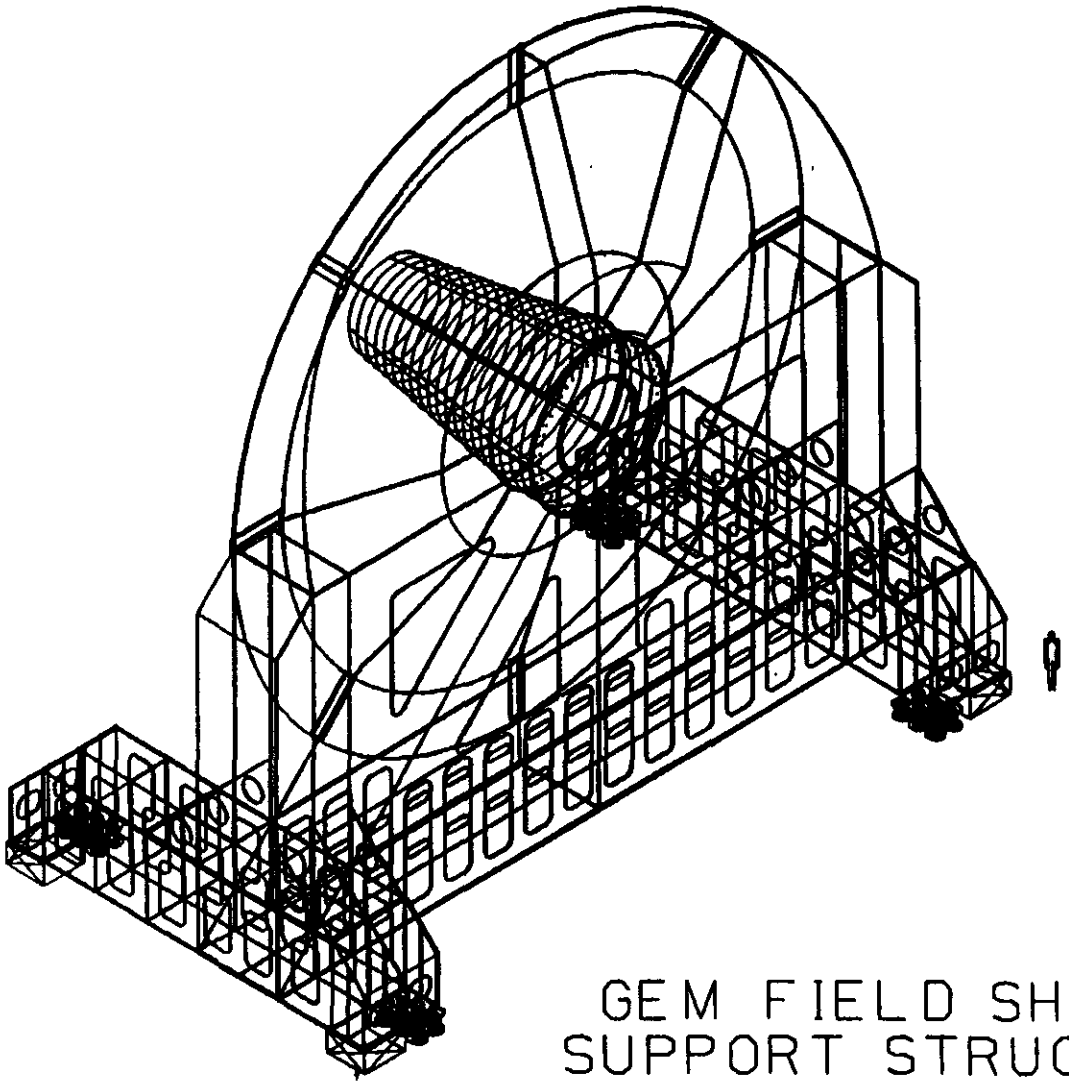

GEM FIELD SHAPER
SUPPORT STRUCTURE
ISO VIEW

FFS support structure concept

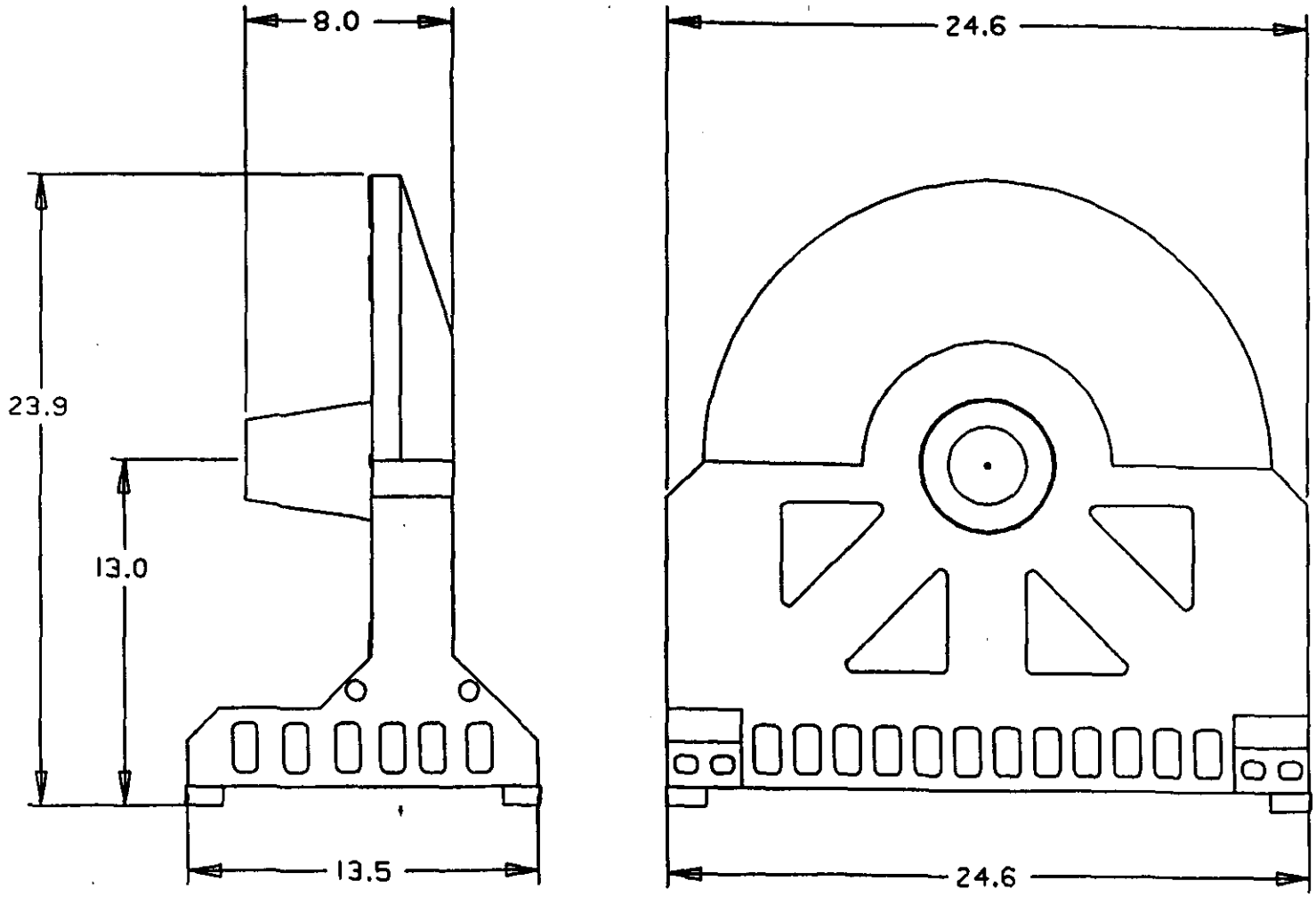

JMB-19
3/27/92

Forward field shaper segmented design

(note that actual sections will be equal weight and have different thicknesses)

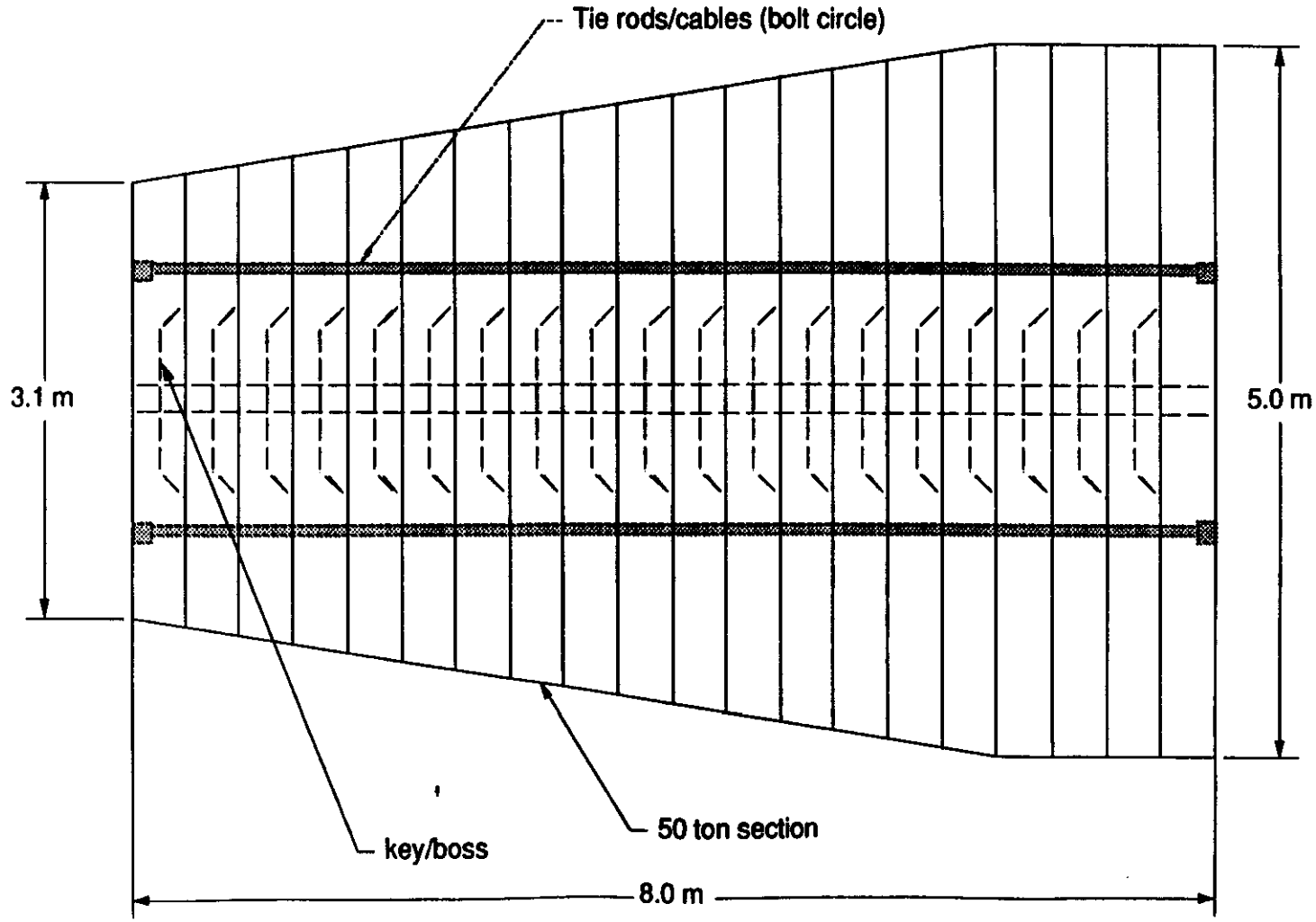

JMB-20
3/27/92

Standards and Specifications

- A Fabrication Specification will control the procedures and materials used in construction

- Typical general specifications include:
  ASTM, AWS, AISC, UBC

Construction and fabrication issues

- Schedule / milestone tracking
- Mill run procurement
- On site/ off site fabrication and machining
- Automatic welding opportunities
- Low carbon - stainless steel welds
- Blasting and painting
- Foundry capacities and casting inspection
- Lathe capacities
- Tolerances
- Installation and alignment
- QA program plan

Superconducting Super Collider

gem

Central Membrane

Joel Bowers

Lawrence Livermore National Laboratory
April 1, 1992

JMB-23
3/27/92

Overall goals and requirements

- Central detector support
  - -provides dead load and seismic stability
  - -minimizes space conflicts with muon detectors

- Free-standing
  - - magnet axial loads are reacted via columns through holes in central membrane

- Tight alignment tolerances, not yet finalized

Major design parameters

- Double membrane, internal radial webs
- Independent support structure
- Central cylinder holds central detector
- Mostly low carbon steel, A36
- Possibly stainless steel radial stiffeners
- Each membrane
  - weighs about 400 tons
  - 4" thick
  - 21.8 m (71.5 ft) overall outside diameter

- Total structure weight is about 2000 tons
- Assembly with detector weighs about 5000 tons

Central membrane

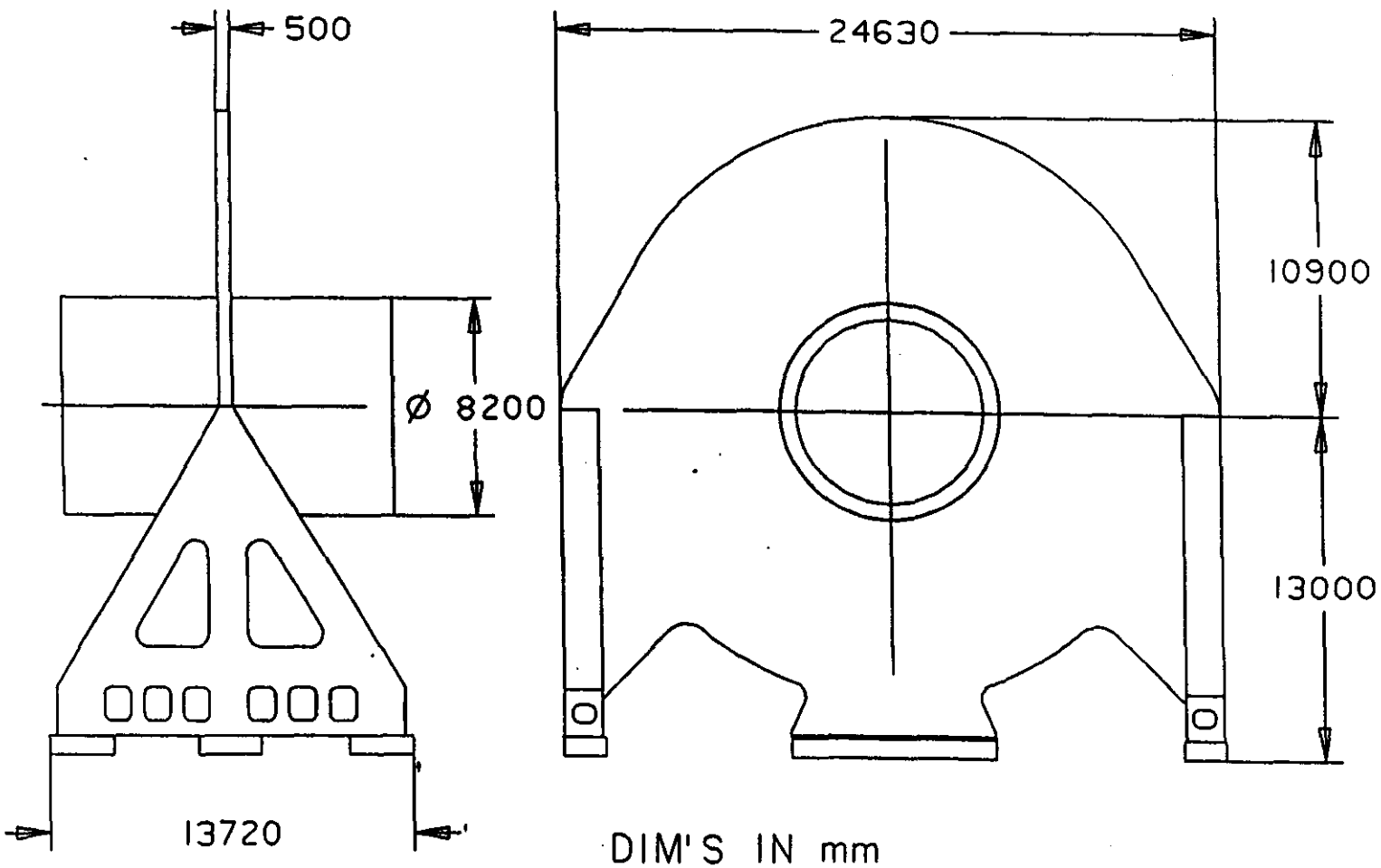

JMB-26
3/27/92

Standards and Specifications

- A Fabrication Specification will control the procedures and materials used in construction

- Typical general specifications include:
  ASTM, AWS, AISC, UBC

Construction and fabrication issues

- Schedule / milestone tracking
- Mill run procurement
- On site/ off site fabrication and machining
- Automatic welding opportunities
- Low carbon - stainless steel welds
- Blasting and painting
- Tolerances
- Installation and alignment
- QA program plan

Superconducting Super Collider

LLNL Structural Analysis of Magnet Subsystem

Sarah Wineman
Wally Hsu
Dorothy Ng

Lawrence Livermore National Laboratory
April 1, 1992

LLNL Structural Analysis

Analysis has been done in several areas:

- Bobbin and support rods
- Liquid Nitrogen thermal shields
- Magnet vessel and support structure
- Forward field shaper
- Central detector support structure

Ongoing work:

- Large model of bobbin in vessel
- FE analysis of vessel and FFS support structure
- Detailed stresses at end rings

LN2 shield fixed ends with tubes [MPa]
time = 0.10000E+02
contours of eff. stress (v-m)
min= 3.869E+04 in element 1790
max= 1.693E+06 in element 601
shell outer surface in global coordinates

contour values
A= 1.78E+05
B= 3.50E+05
C= 5.22E+05
D= 6.94E+05
E= 8.66E+05
F= 1.04E+06
G= 1.21E+06
H= 1.38E+06
I= 1.55E+06

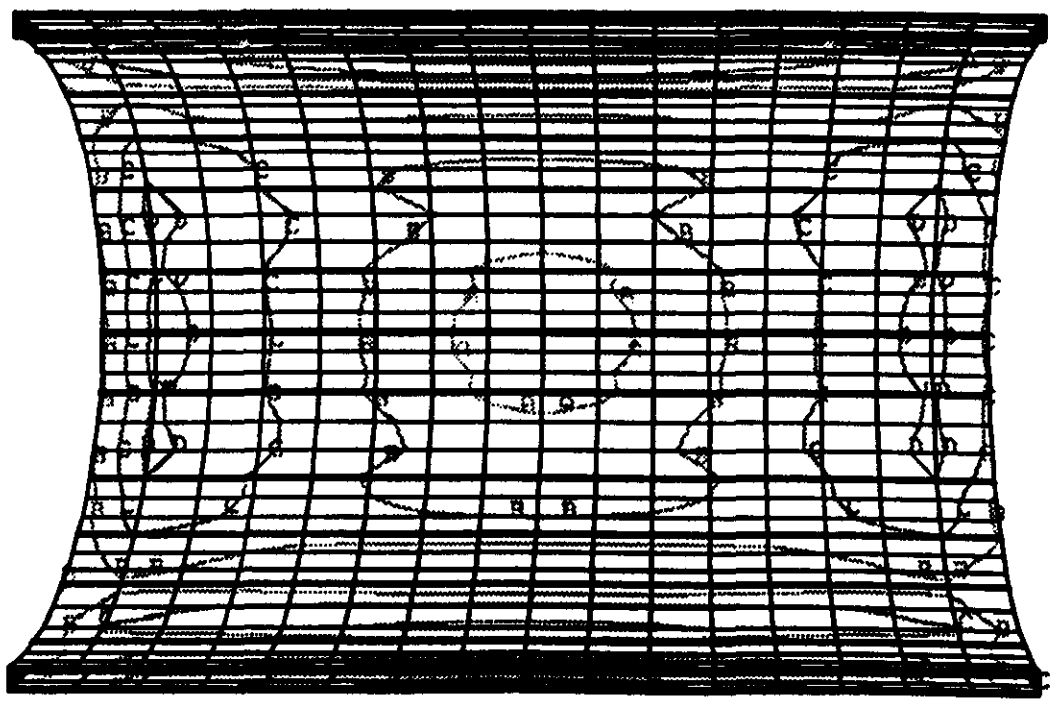

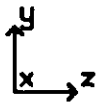

disp. scale factor = 0.100E+01 (default)

LN2 shield fixed ends with tubes [m]
time = 0.10000E+02
contours of tot. displacement
min= 2.618E-06 in element 1929
max= 2.613E-03 in element 598
shell outer surface in global coordinates

contour values
A= 2.22E-04
B= 4.93E-04
C= 7.65E-04
D= 1.04E-03
E= 1.31E-03
F= 1.58E-03
G= 1.85E-03
H= 2.12E-03
I= 2.39E-03

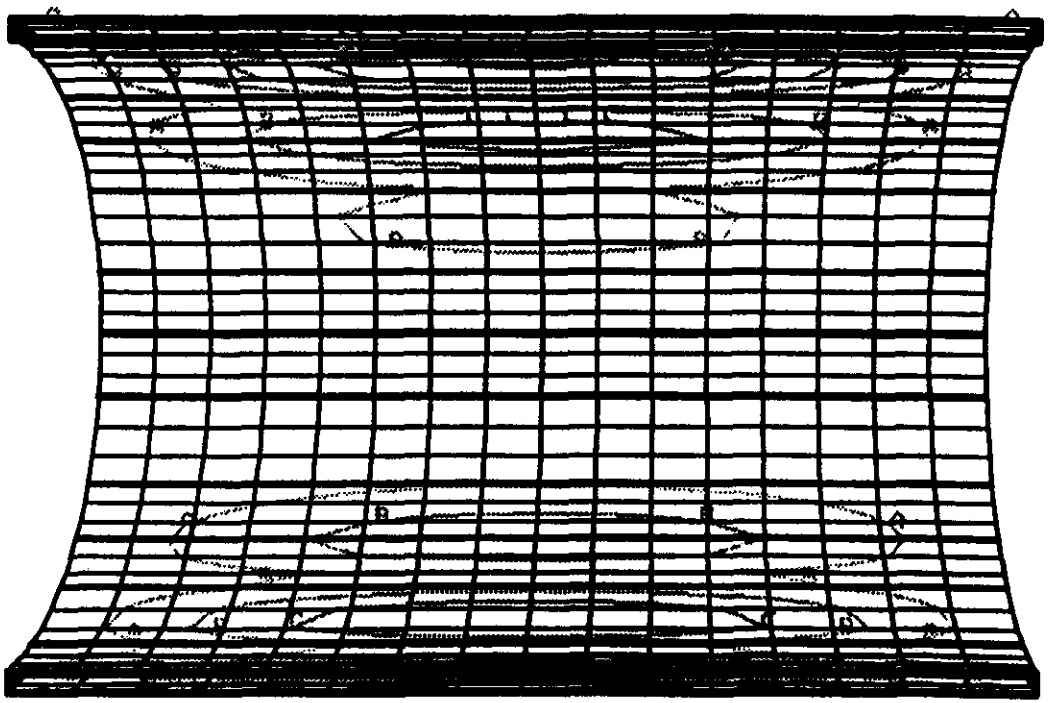

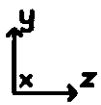

disp. scale factor = 0.100E+01 (default)

LLNL-GEM magnet vessel

INGRID display

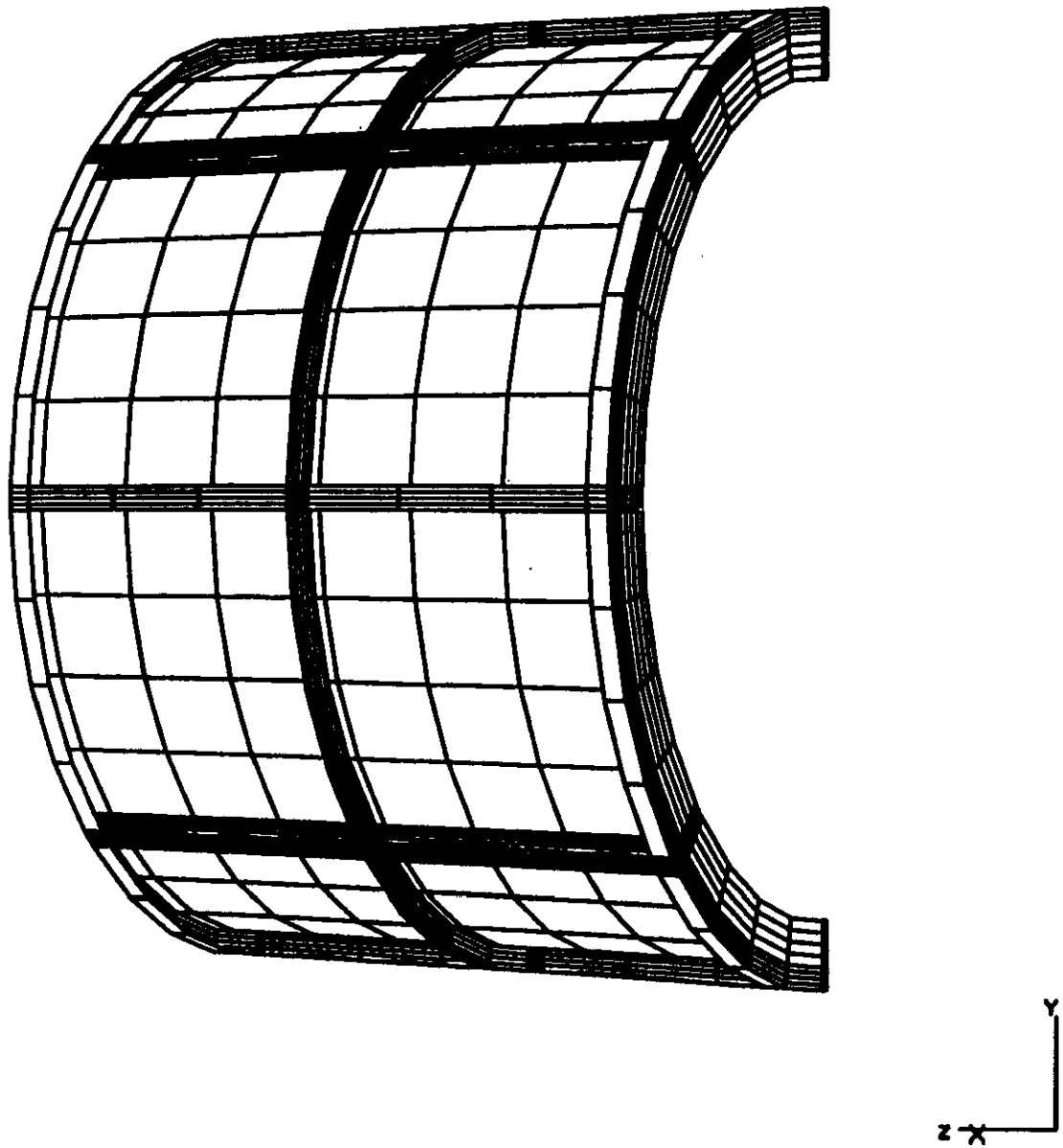

LLNL-GEM magnet vessel
time = 0.10000E+02
contours of eff. stress (v-m)
min= 0.000E+00 in element 1024
max= 4.366E+08 in element 992
shell outer surface in global coordinates

contour values
A= 3.67E+07
B= 8.21E+07
C= 1.27E+08
D= 1.73E+08
E= 2.18E+08
F= 2.64E+08
G= 3.09E+08
H= 3.55E+08
I= 4.00E+08

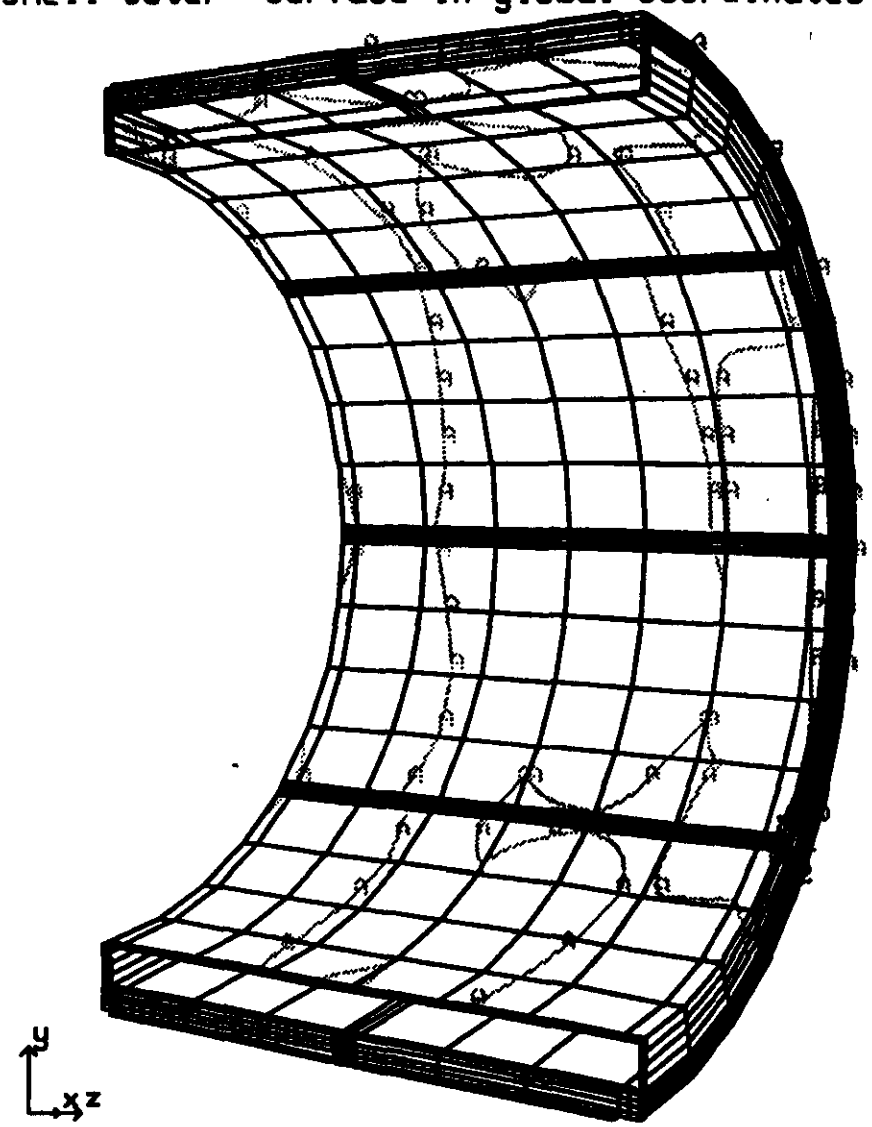

disp. scale factor = 0.100E+01 (default)

LLNL-GEM FFS Support [MPa]
time = 0.10000E+02
contours of eff. stress (v-m)
min= 5.987E+05 in element 240
max= 6.650E+07 in element 393
shell middle surface in global coordinates

contour values
A= 6.13E+06
B= 1.30E+07
C= 1.98E+07
D= 2.67E+07
E= 3.36E+07
F= 4.04E+07
G= 4.72E+07
H= 5.41E+07
I= 6.10E+07

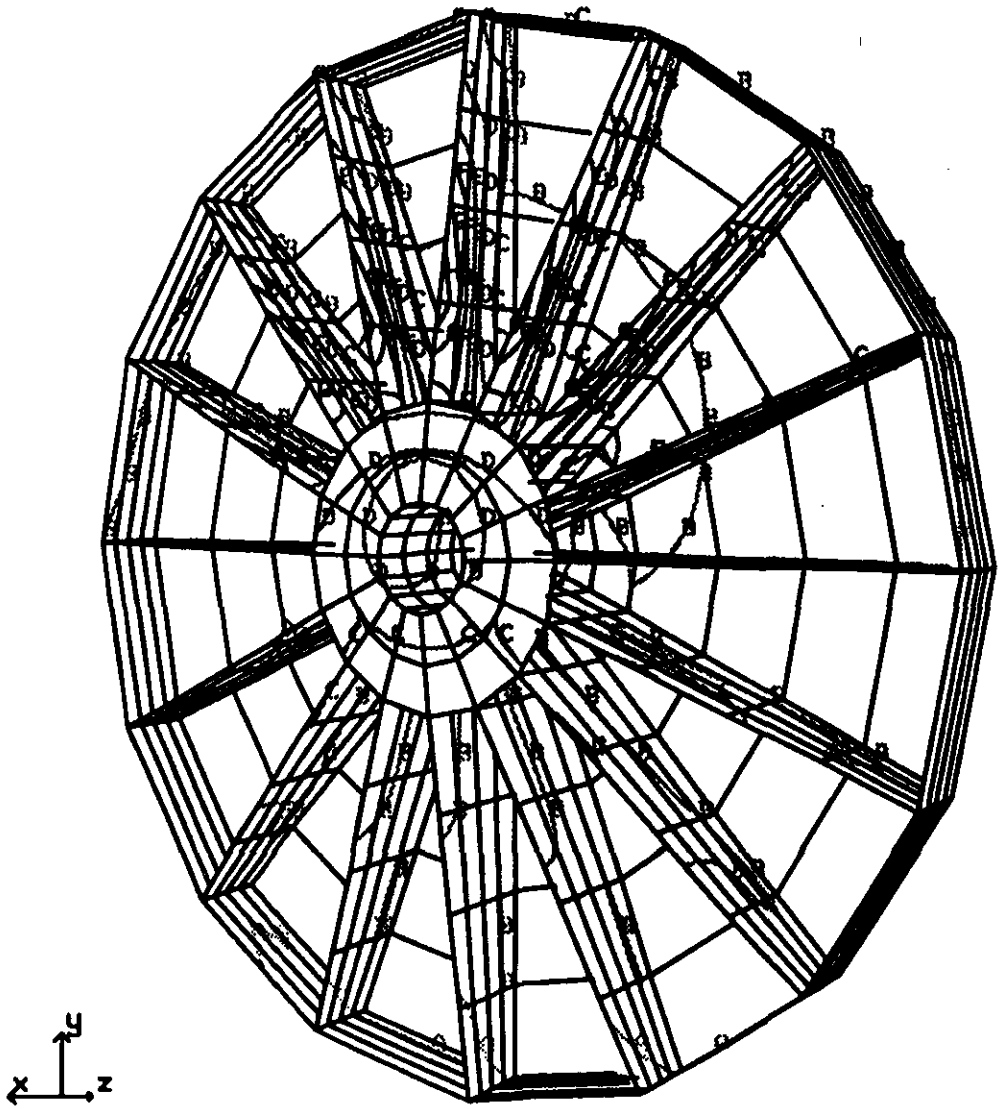

disp. scale factor = 0.100E+01 (default)

LLNL-GEM FFS Support [MPa]
time = 0.10000E+02
contours of eff. stress (v-m)
min= 1.268E+06 in element 156
max= 6.156E+07 in element 72
shell outer surface in global coordinates

contour values
A= 6.33E+06
B= 1.26E+07
C= 1.89E+07
D= 2.51E+07
E= 3.14E+07
F= 3.77E+07
G= 4.40E+07
H= 5.02E+07
I= 5.65E+07

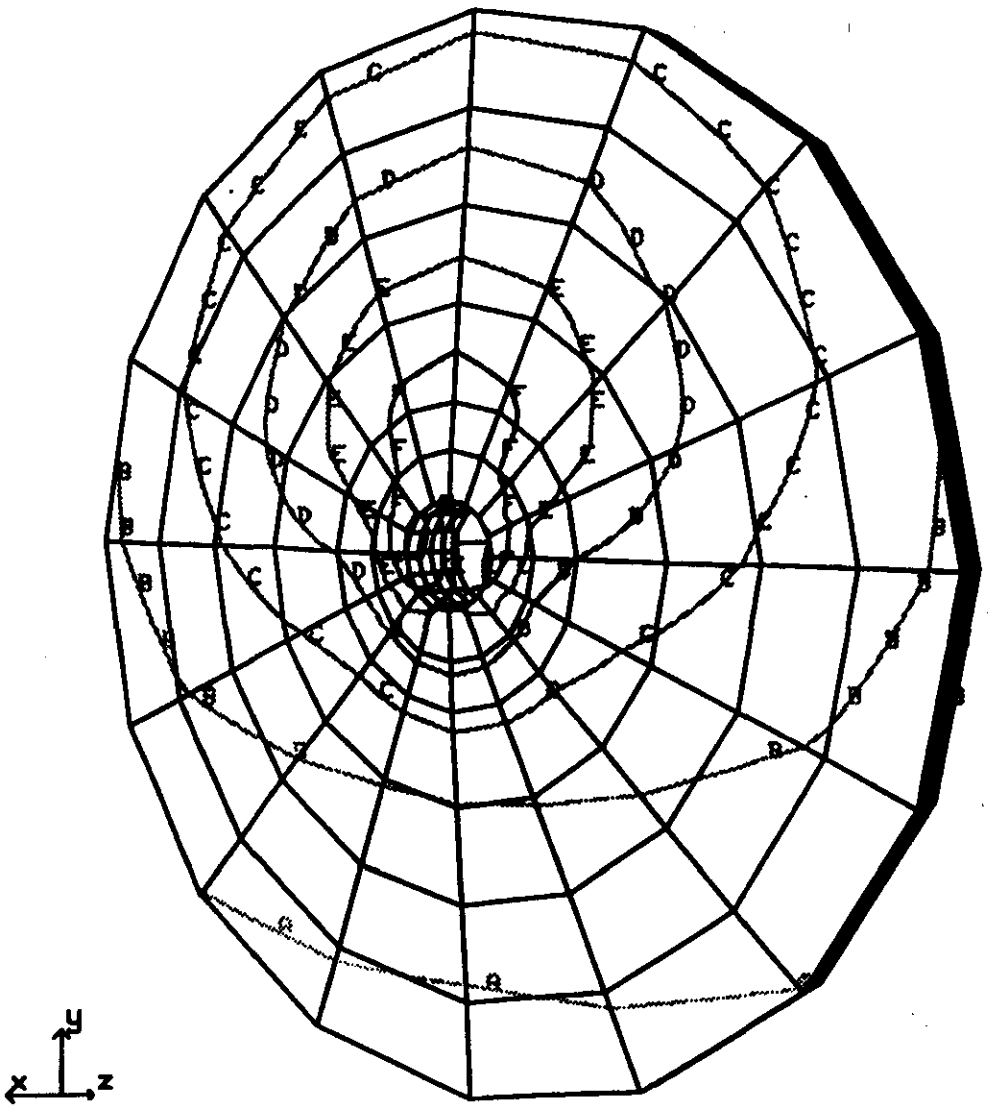

disp. scale factor = 0.100E+01 (default)

Detector support

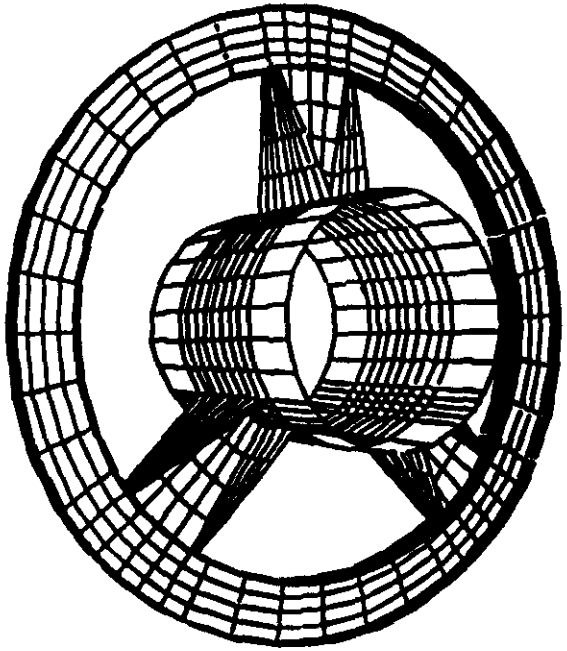

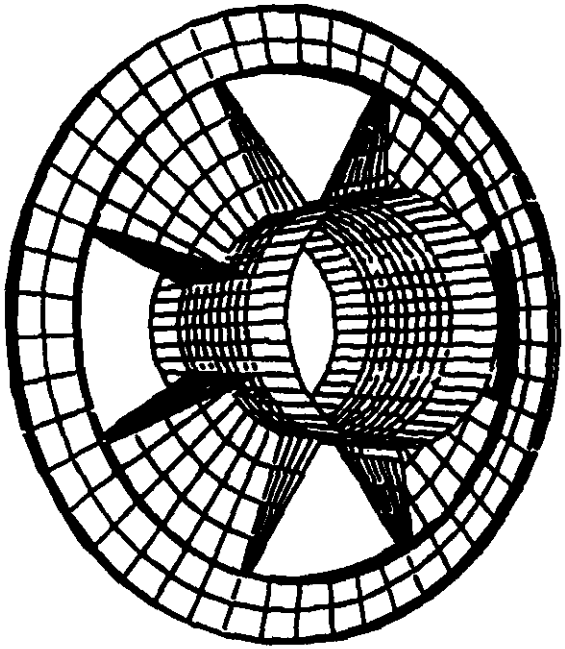

Detector support

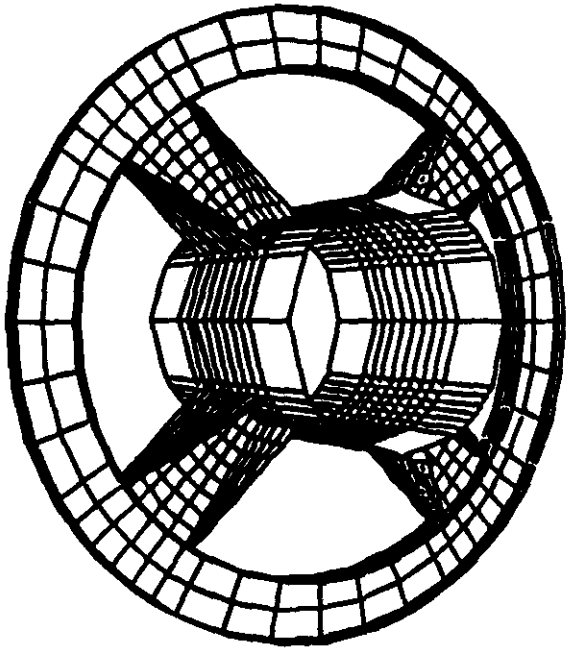

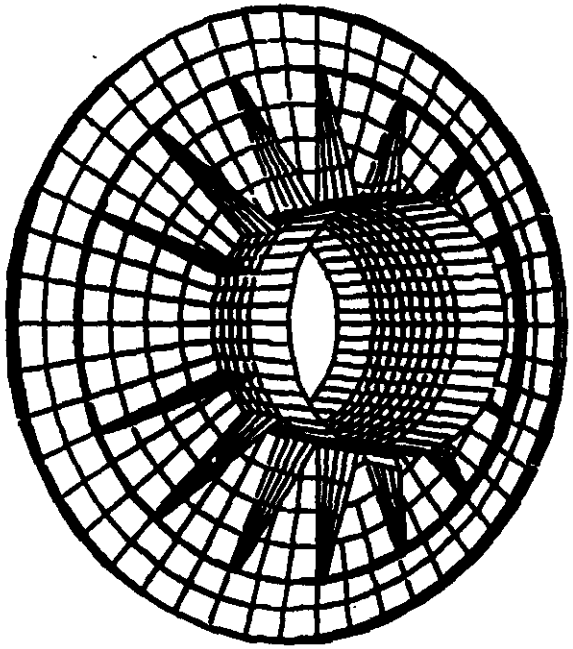

Detector support
time = 0.62949E+02

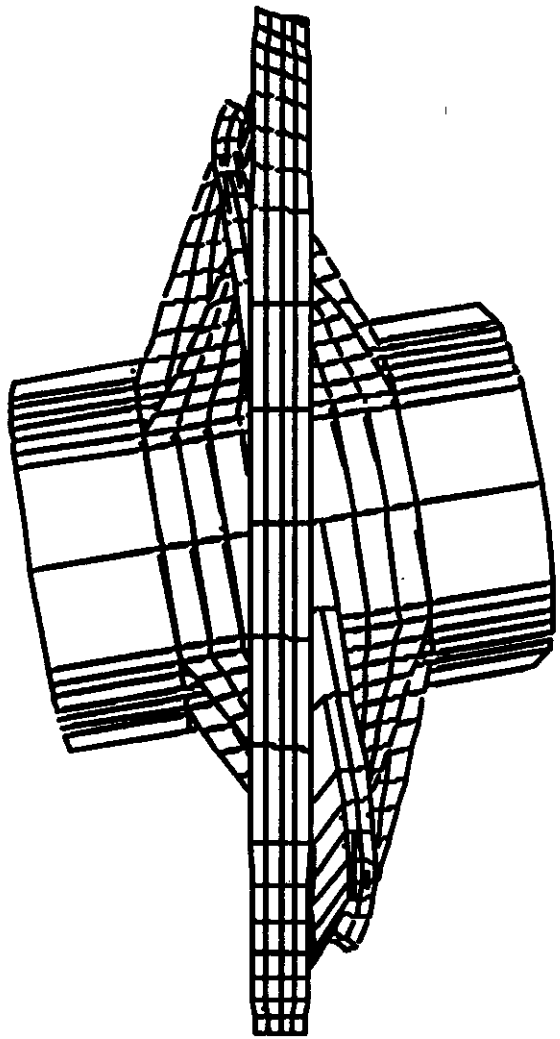

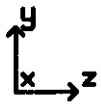

disp. scale factor = 0.100E+01 (default)

Det. support swhldia
time = 0.10000E+02

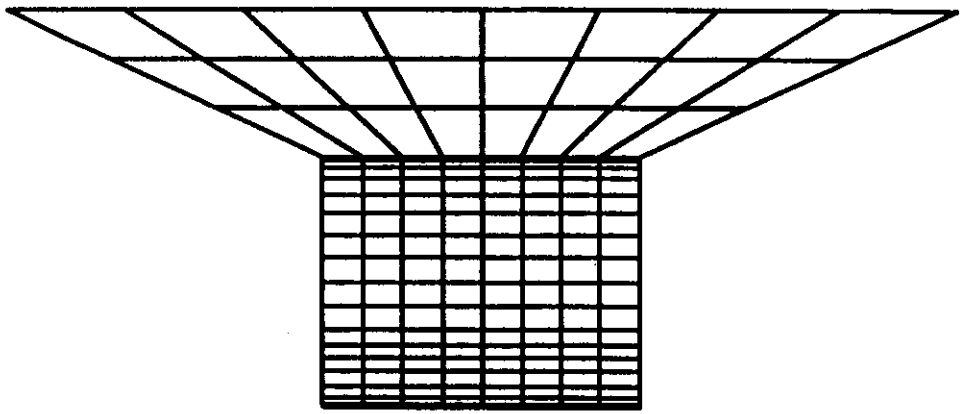

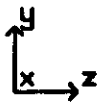

disp. scale factor = 0.100E+01 (default)

Det. supp.
time = 0.11036E+03

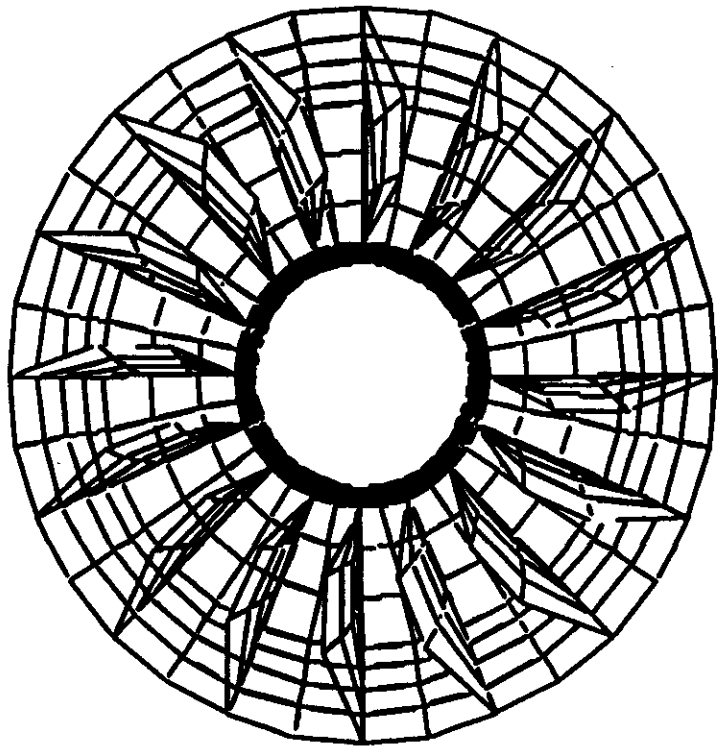

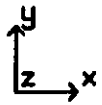

disp. scale factor = 0.100E+01 (default)

xxx GEM FIELD SHAPER STRUCTURE [JOE1]GFS1

INGRID display

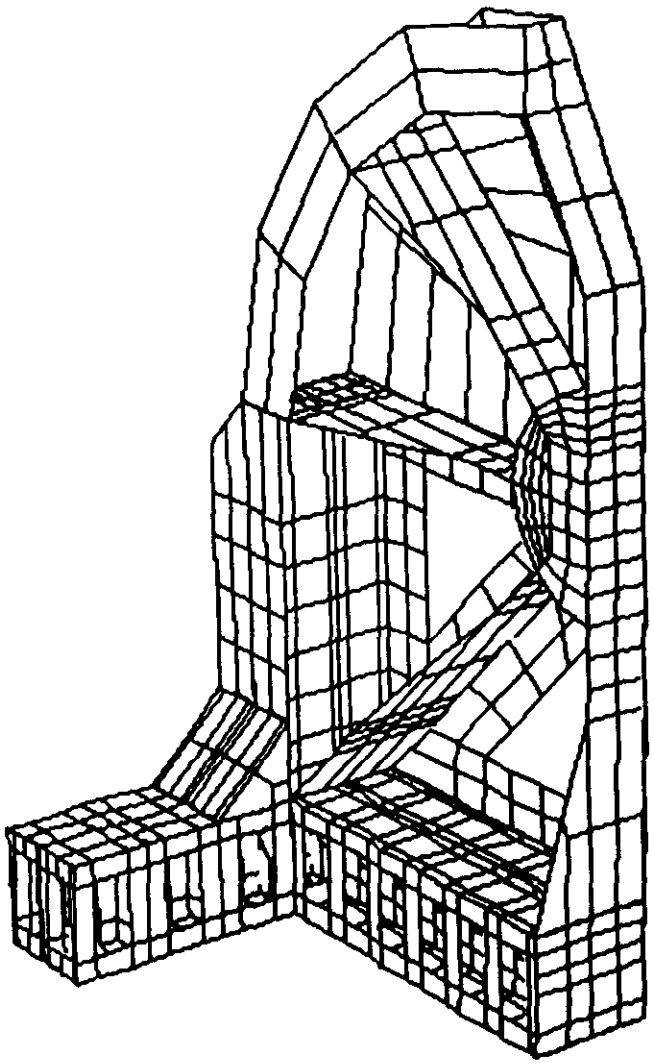

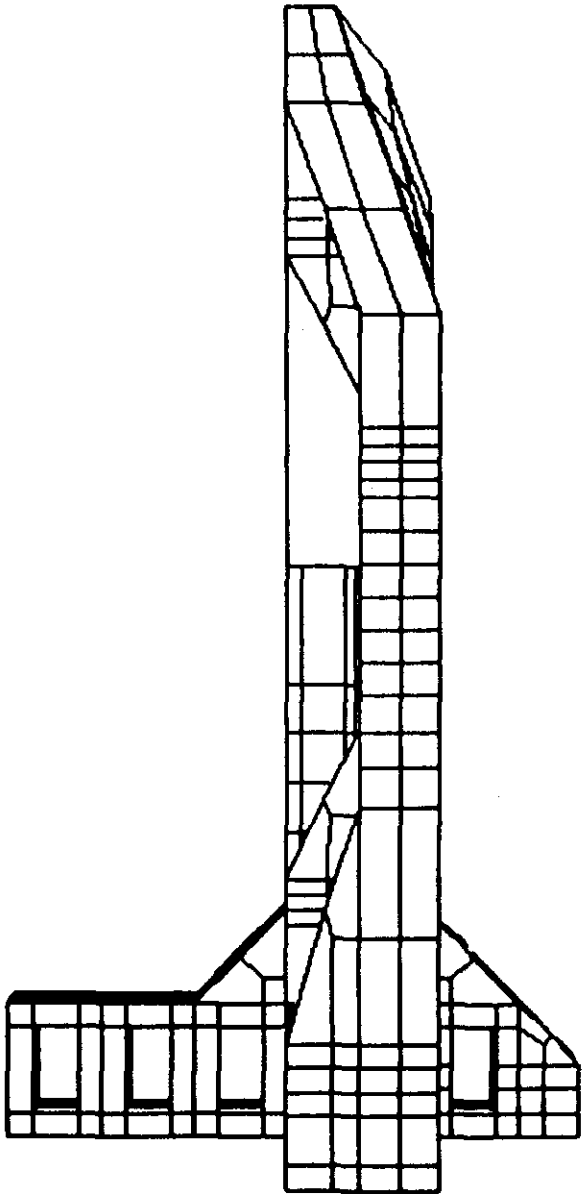

bobbin, rods, vessel

INGRID display

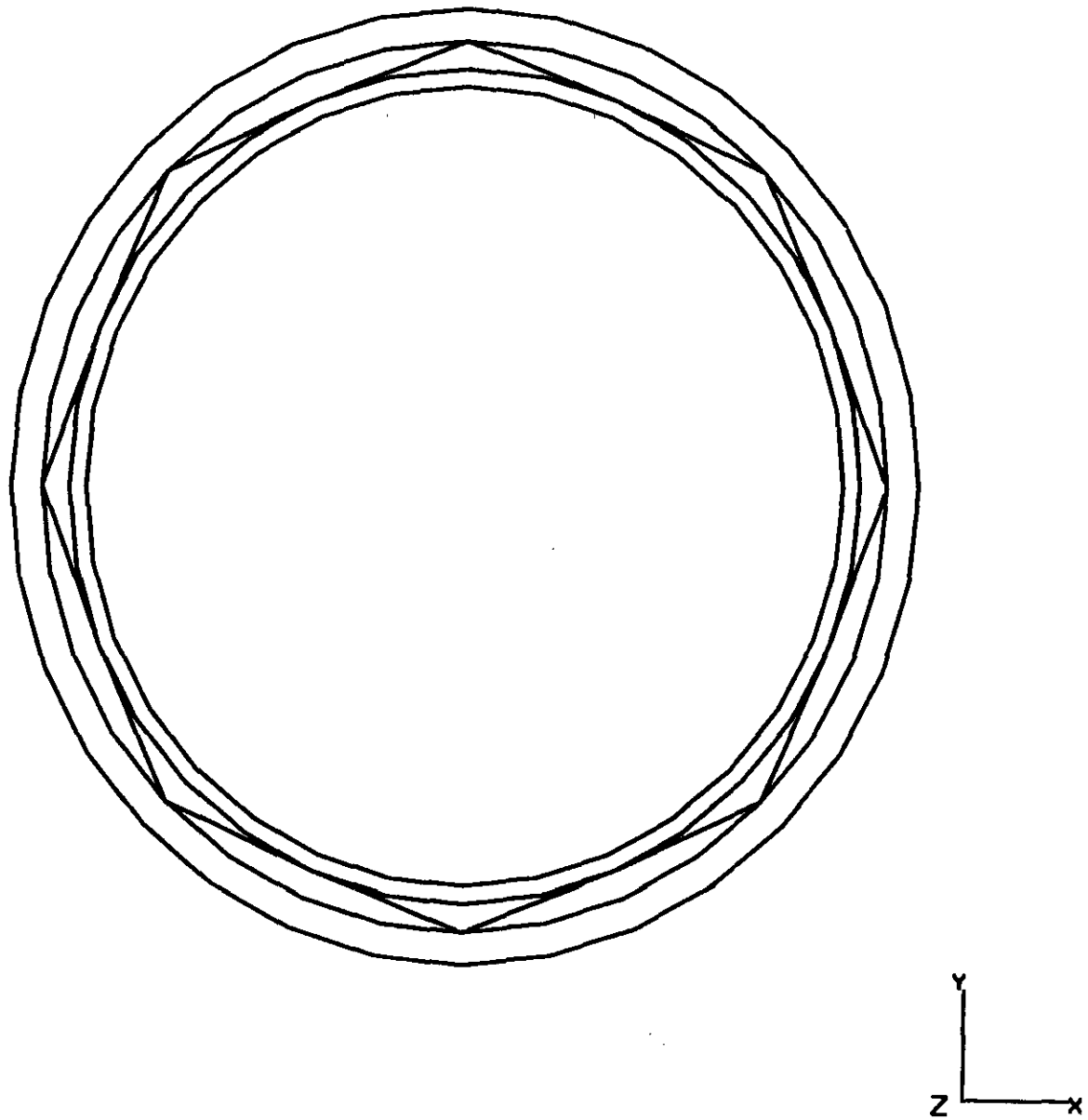

Superconducting Super Collider

MIT Structural Analysis of Magnet Subsystem

Peter Titus

Massachusetts Institute of Technology
Plasma Fusion Center
April 1, 1992

Coil Loading and Significant Stress Effects

Solenoidal Hoop Stress
- Load share with Bobbin
- Effect of Preload from Winding and Turnbuckle
- Effect of Composite Hoop Modulus of the Conductor
- Differential Cooldown Hoop stress

Solenoidal Axial Stress
- Load share with Bobbin
- Preload from compression flange

Conductor Internal Stresses
- Cooldown Differential Contraction
- Quench Internal Pressurization

Joint Stress Analysis
- Stiffness Anomalies and Hoop Stress Variations
- Cooldown Differential Contraction

Bobbin Flange Stress
- Axial Preload
- Axial Solenoidal Loads

Gravity Support by Radius Rods

Tierod Lug Stresses

Winding Effects
- Buckling of the Coil Stack
- Keystoning and Forming Plastic Strains

Handling Stresses
- Up-Ending
- Temporary Support at Assembly

Potential Off Normal Loading
- Off-Center Flux Concentrator
- One Coil Quench Dynamic Loading

Simple Axisymmetric Models

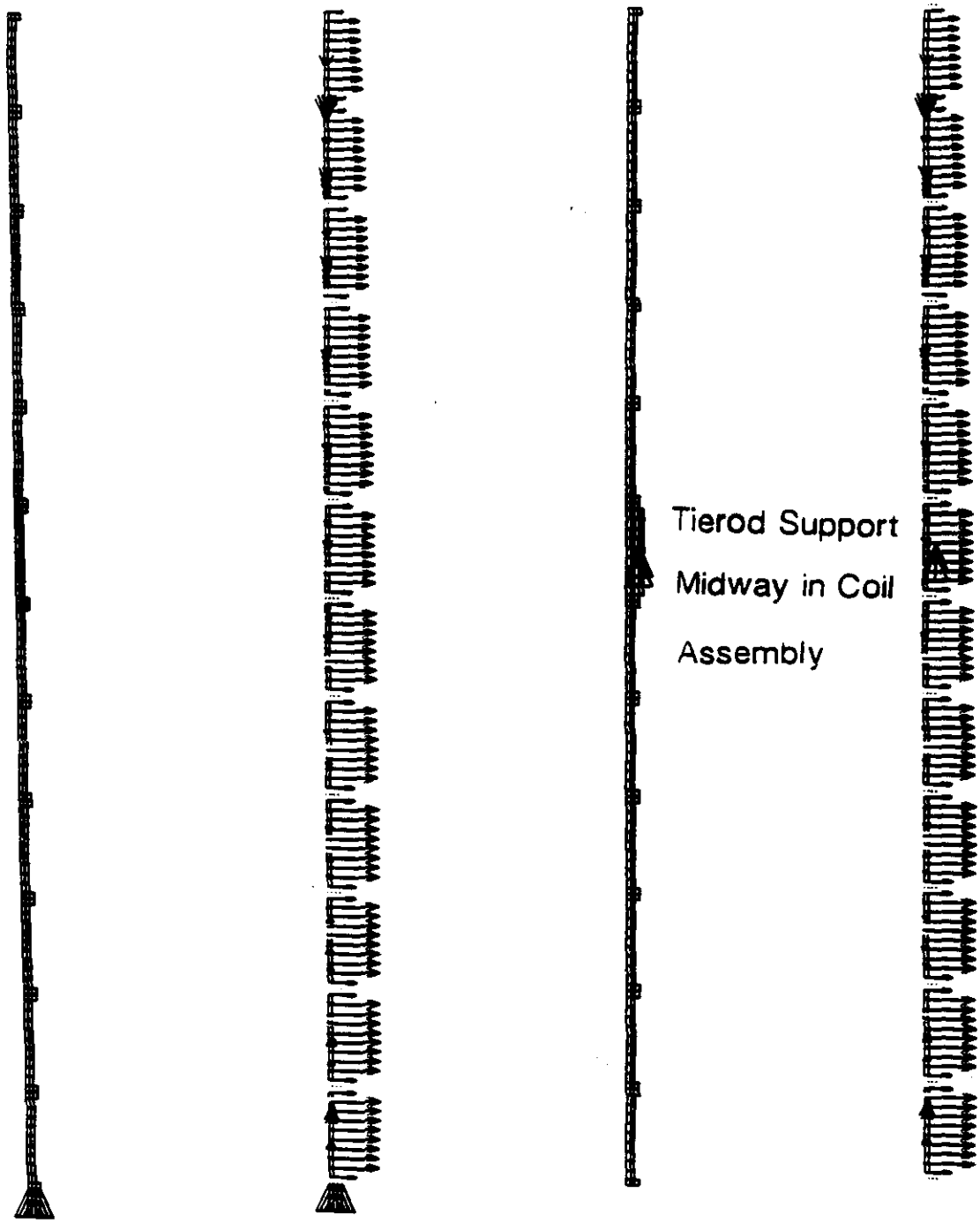

Support at Central Membrane

GEM Detector Magnet Lorentz Forces

(No Iron)

(1.5 Meter Separation at Central Membrane)

Total Force Vectors

Radial Forces

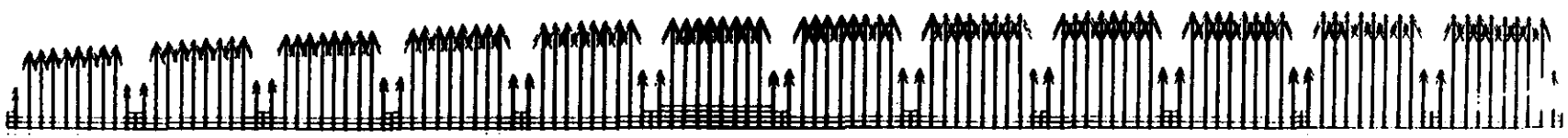

Net Radial Load = 35.033e6
Newton/Radian

Axial Forces (Plotted Vertically)

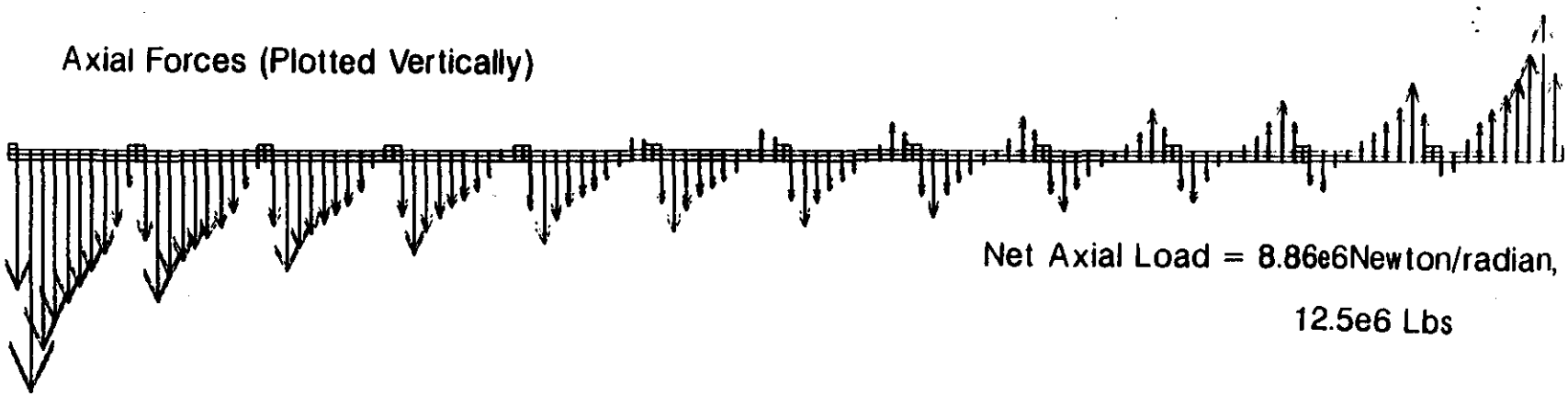

Net Axial Load = 8.86e6Newton/radian,

12.5e6 Lbs

Central Membrane at This End

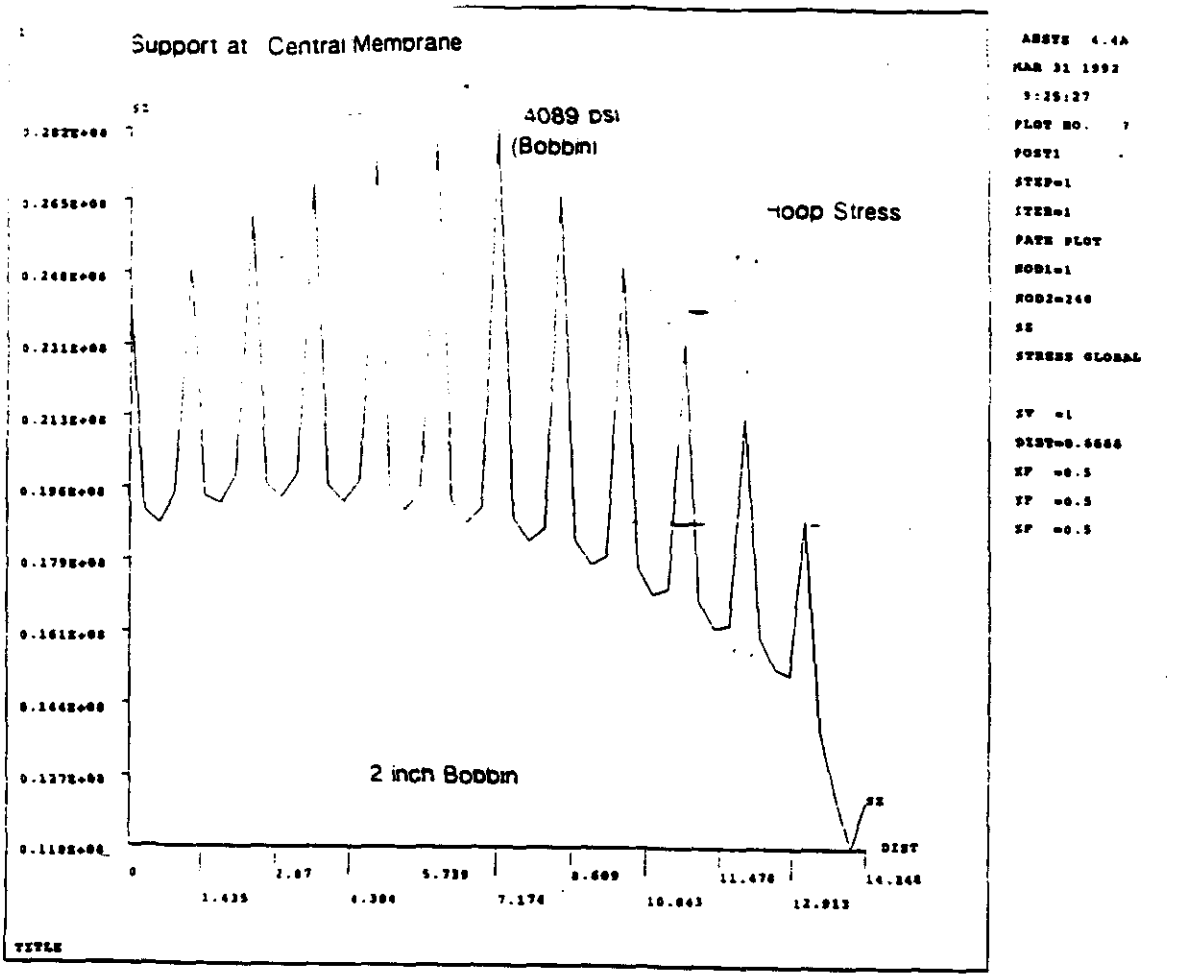
Support at Central Membrane
4089 psi
(Bobbin)
Hoop Stress
2 inch Bobbin
DIST
TITLE
ANSYS 4.4A
MAR 31 1992
9:25:27
PLOT NO. 7
POST1
STEP=1
ITER=1
PATH PLOT
NOD1=1
NOD2=240
SZ
STRESS GLOBAL
ZV =1
DIST=0.5666
XF =0.5
YF =0.5
ZF =0.5

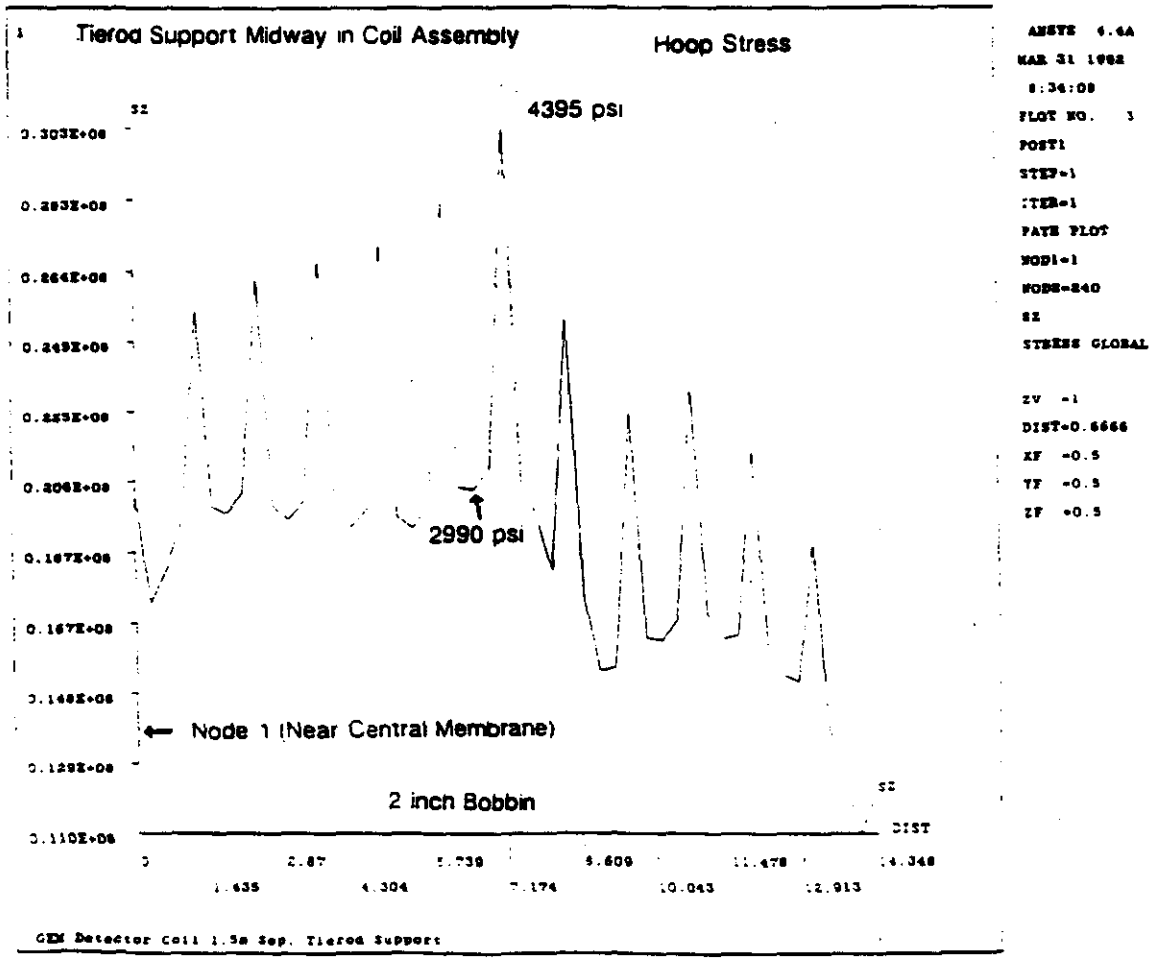
Tierod Support Midway in Coil Assembly
Hoop Stress
4395 psi
2990 psi
Node 1 (Near Central Membrane)
2 inch Bobbin
DIST
GEM Detector Coil 1.5m Sep. Tierod Support
ANSYS 4.4A
MAR 31 1992
8:34:08
PLOT NO. 3
POST1
STEP=1
ITER=1
PATH PLOT
NOD1=1
NOD2=240
SZ
STRESS GLOBAL
ZV =1
DIST=0.5666
XF =0.5
YF =0.5
ZF =0.5

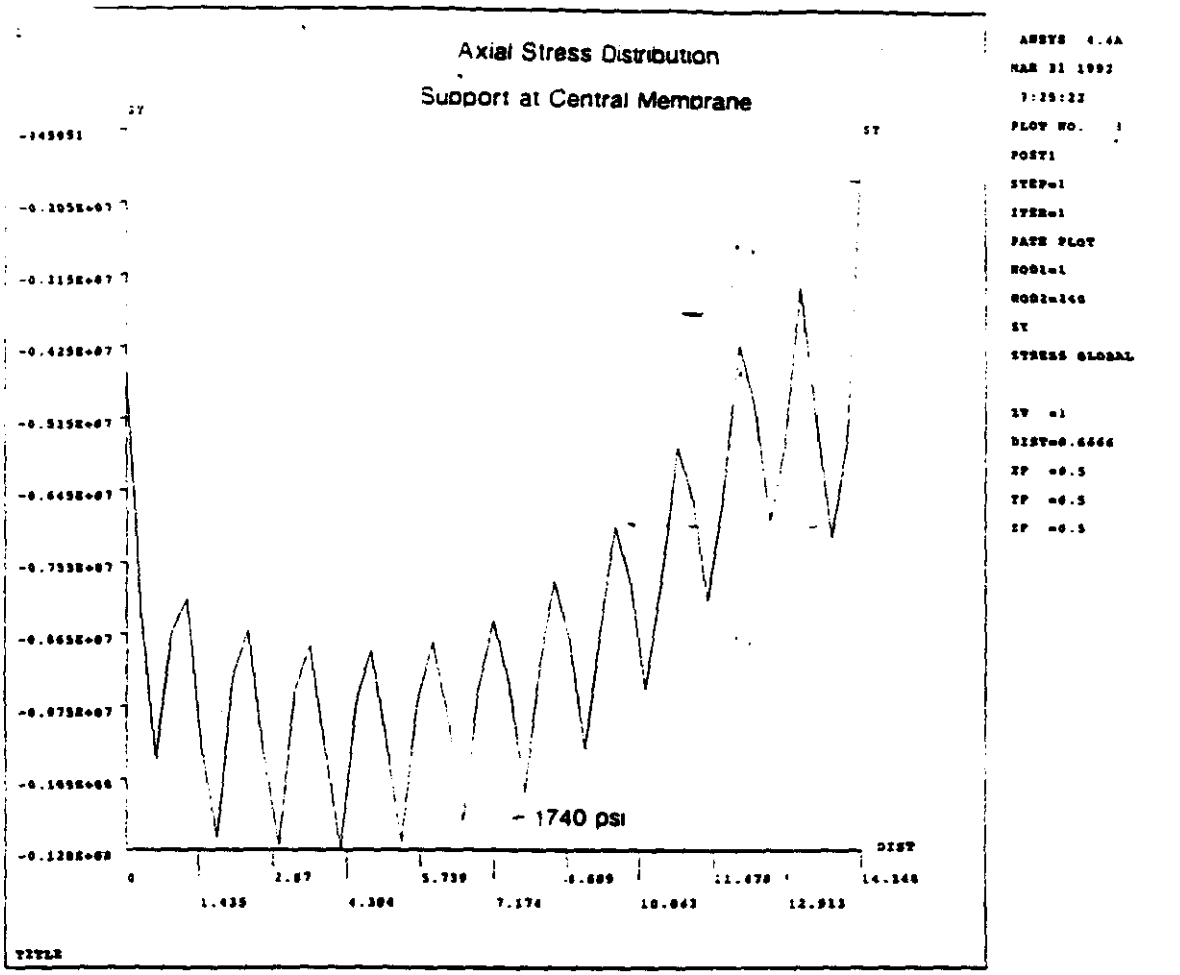
Axial Stress Distribution
Support at Central Membrane
SY
ST
-0.105E+07
-0.115E+07
-0.425E+07
-0.515E+07
-0.645E+07
-0.755E+07
-0.865E+07
-0.975E+07
-0.128E+08
- 1740 psi
DIST
0
2.87
5.739
8.609
11.478
14.348
1.435
4.304
7.174
10.043
12.913
TITLE
ANSYS 4.4A
MAR 31 1992
PLOT NO.
POST1
STEP=1
ITER=1
PATH PLOT
NOD1=1
NOD2=144
SY
STRESS GLOBAL
ZV =1
DIST=0.6666
XF =0.5
YF =0.5
ZF =0.5

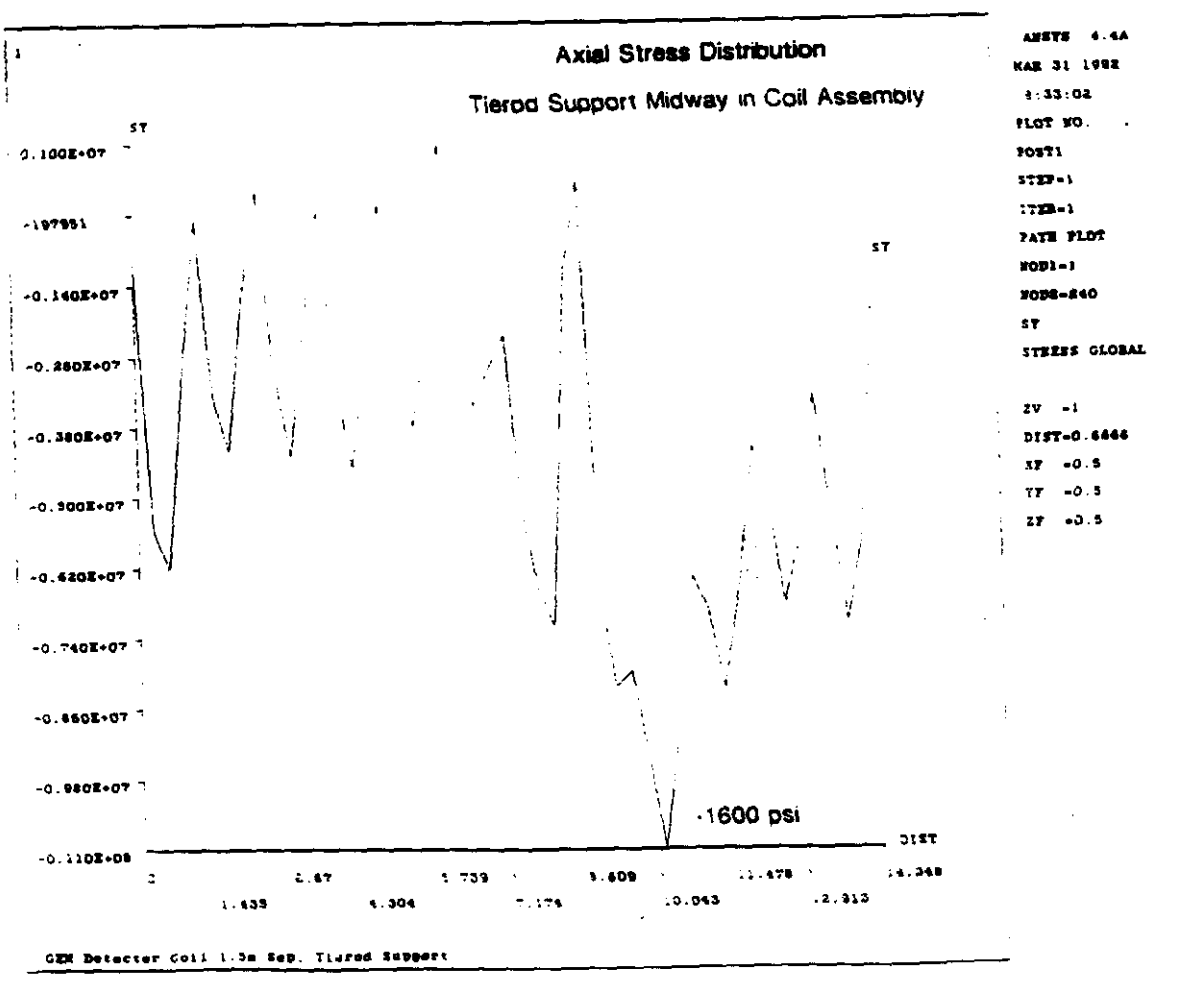
Axial Stress Distribution
Tierod Support Midway in Coil Assembly
ST
0.100E+07
-197951
-0.140E+07
-0.280E+07
-0.380E+07
-0.500E+07
-0.620E+07
-0.740E+07
-0.860E+07
-0.980E+07
-0.110E+08
-1600 psi
DIST
0
2.87
5.739
8.609
11.478
14.348
1.435
4.304
7.174
10.043
12.913
GEM Detector Coil 1.5m Sep. Tiered Support
ANSYS 4.4A
MAR 31 1992
PLOT NO.
POST1
STEP=1
ITER=1
PATH PLOT
NOD1=1
NOD2=240
SY
STRESS GLOBAL
ZV =1
DIST=0.6666
XF =0.5
YF =0.5
ZF =0.5

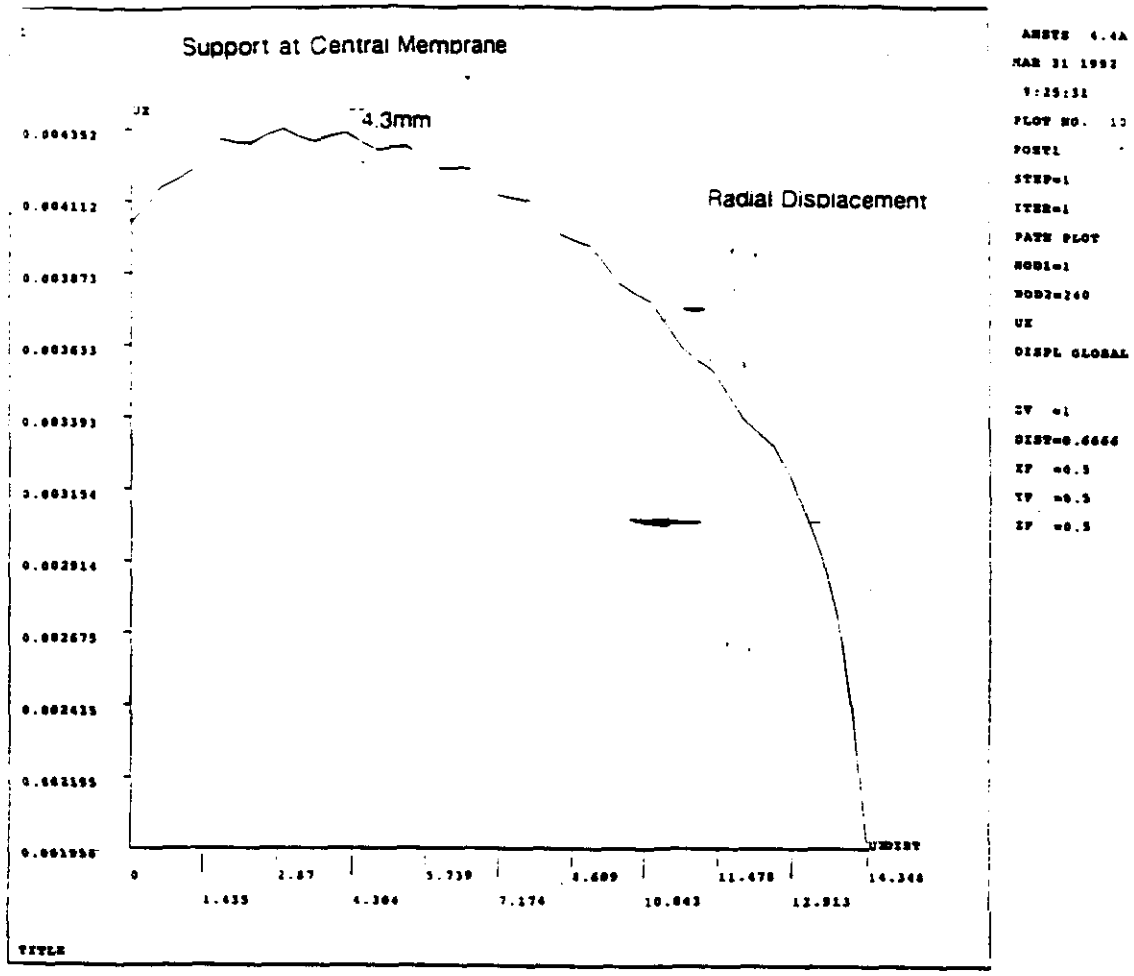
Support at Central Membrane
4.3mm
Radial Displacement
UX
0.004352
0.004112
0.003871
0.003633
0.003393
0.003154
0.002914
0.002675
0.002435
0.002195
0.001956
UDIST
0
1.435
2.87
4.304
5.739
7.174
8.609
10.043
11.478
12.913
14.348
TITLE
ANSYS 4.4A
MAR 31 1992
9:25:31
PLOT NO. 13
POST1
STEP=1
ITER=1
PATH PLOT
NOD1=1
NOD2=240
UX
DISPL GLOBAL
ZV =1
DIST=0.6666
XF =0.5
YF =0.5
ZF =0.5

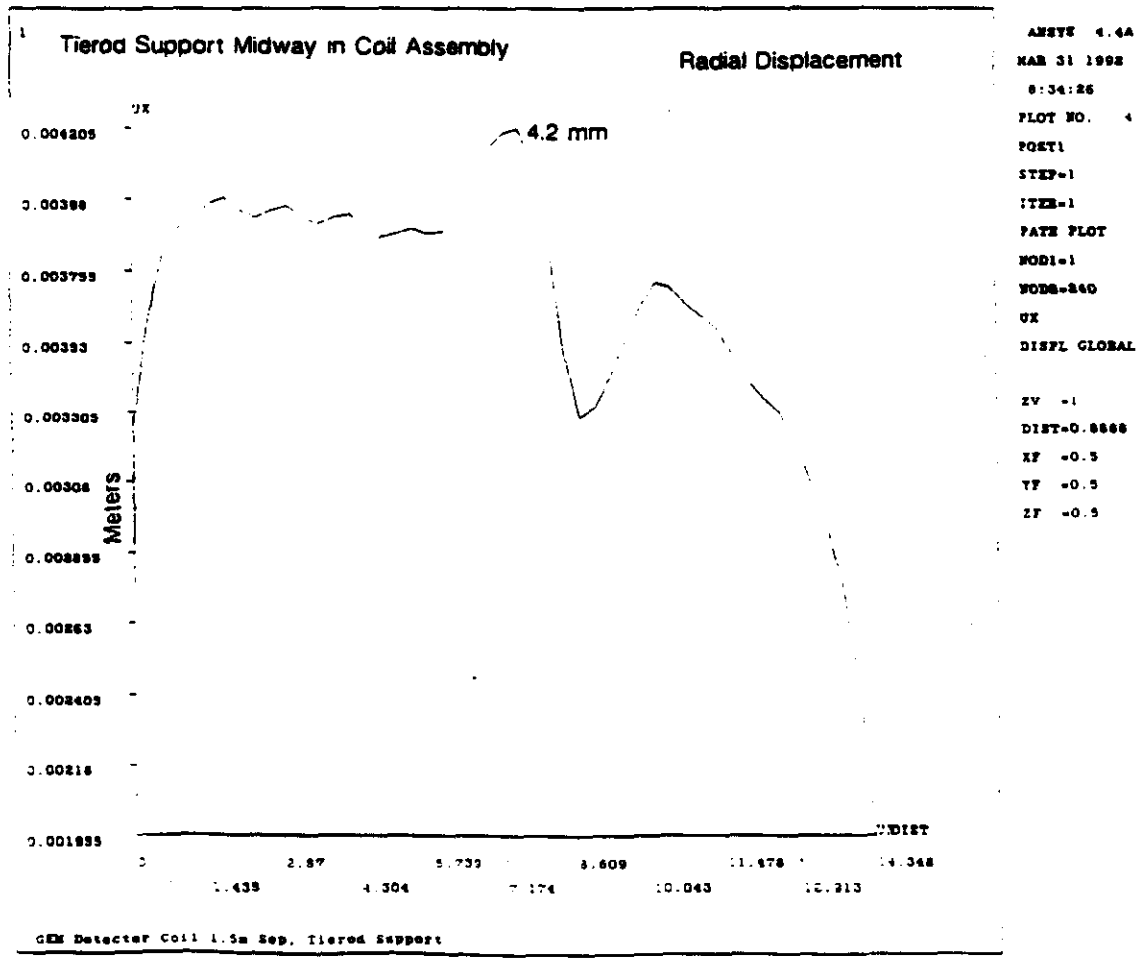
Tierod Support Midway in Coil Assembly
Radial Displacement
4.2 mm
UX
Meters
0.004205
0.00398
0.003755
0.00353
0.003305
0.00308
0.002855
0.00263
0.002405
0.00218
0.001955
UDIST
0
1.435
2.87
4.304
5.739
7.174
8.609
10.043
11.478
12.913
14.348
GEM Detector Coil 1.5m Sep, Tierod Support
ANSYS 4.4A
MAR 31 1992
8:34:26
PLOT NO. 4
POST1
STEP=1
ITER=1
PATH PLOT
NOD1=1
NOD2=240
UX
DISPL GLOBAL
ZV =1
DIST=0.6666
XF =0.5
YF =0.5
ZF =0.5

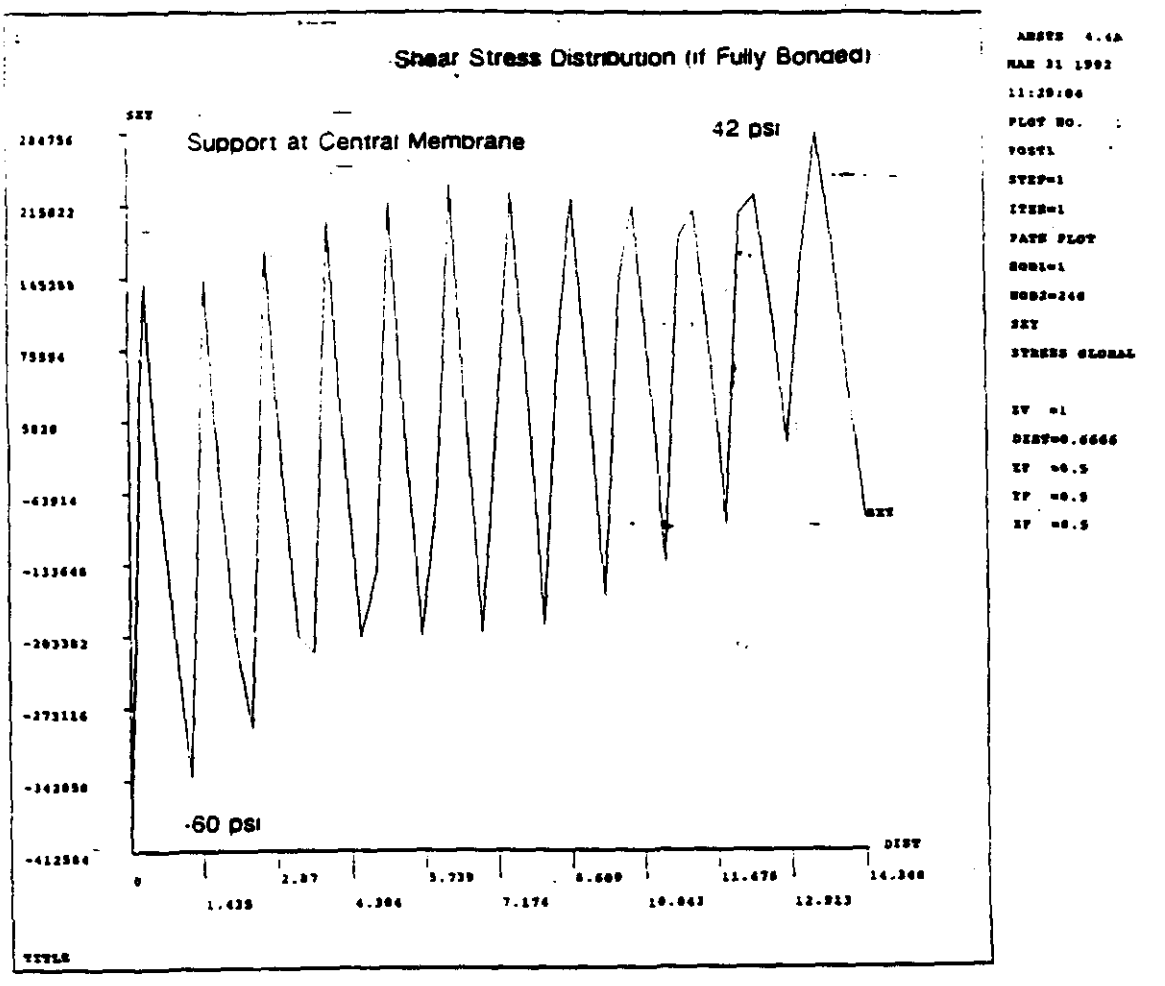
Shear Stress Distribution (if Fully Bonded)
Support at Central Membrane
42 psi
-60 psi
SXY
DIST
TITLE
ABSYS 4.4A
MAR 31 1992
11:29:04
PLOT NO.
POST1
STEP=1
ITER=1
PATH PLOT
NOD1=1
NOD2=246
SXY
STRESS GLOBAL
XV =1
DIST=0.6666
XP =0.5
YP =0.5
ZP =0.5

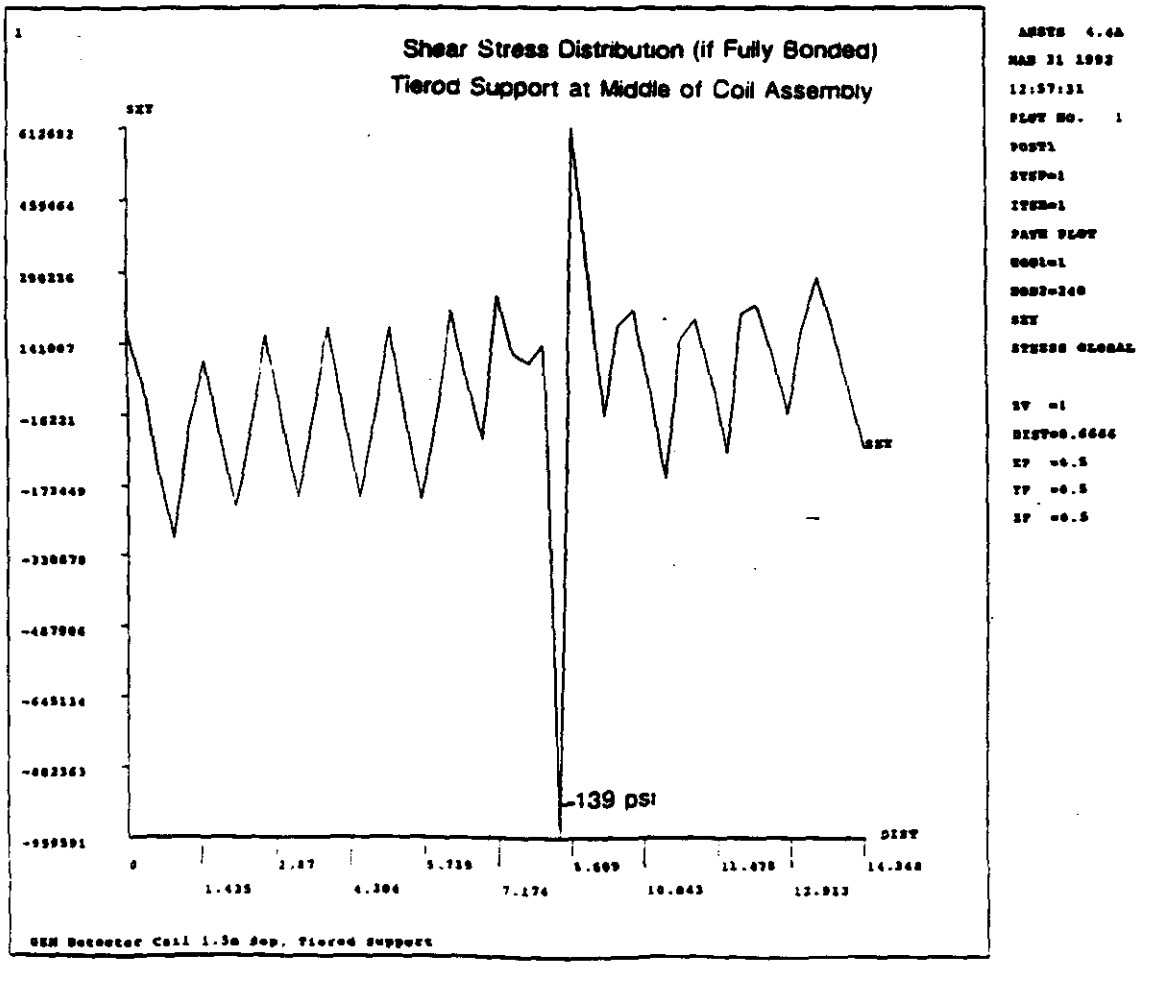
Shear Stress Distribution (if Fully Bonded)
Tierod Support at Middle of Coil Assembly
-139 psi
SXY
DIST
ABSYS 4.4A
MAR 31 1992
12:57:31
PLOT NO. 1
POST1
STEP=1
ITER=1
PATH PLOT
NOD1=1
NOD2=246
SXY
STRESS GLOBAL
XV =1
DIST=0.6666
XP =0.5
YP =0.5
ZP =0.5
GEM Detector Coil 1.5m Sep, Tiered Support

ANSYS Model

End Bobbins

(No Preload)

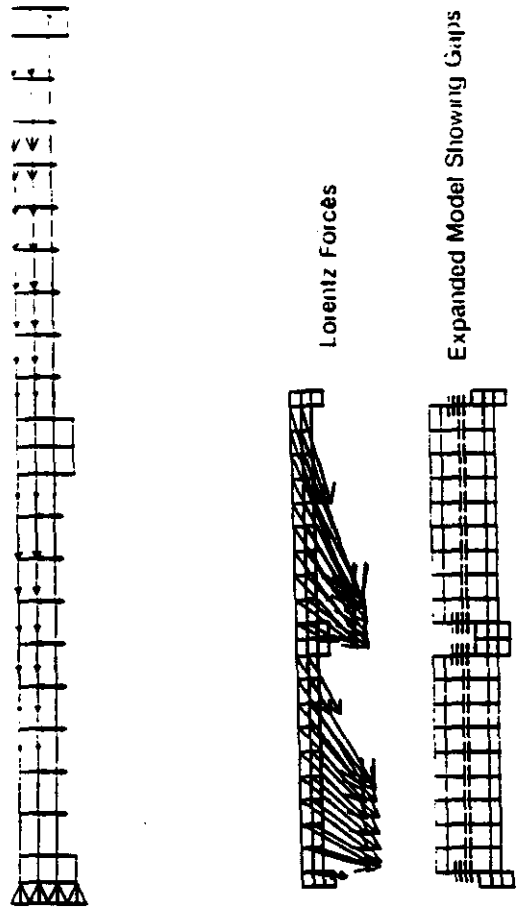

ANSYS 4.4A
MAR 26 1992
13:51:18
PLOT NO. .
PREP7 ELEMENTS
TYPE NUM
TDIS
FORC

XV =1
DIST=1.329
XF =9.551
YF =13.292

. GEN DETECTOR COIL

Axial Differential

Motion in

Last Bobbin

.00017 Meter.

.0067 inch

ANSYS 4.4A
MAR 26 1992
14:05:29
PLOT NO. 5
POST1 STRESS
STEP=1
ITER=5
UY
D GLOBAL
DMX =0.003506
SMN =-0.5098E-03

XV =1
DIST=1.329
XF =9.551
YF =13.292
A =-0.4618E-03
B =-0.4248E-03
C =-0.3868E-03
D =-0.3118E-03
E =-0.2538E-03
F =-0.1968E-03
G =-0.1418E-03
H =-0.8498E-04
I =-0.2838E-04

. GEN DETECTOR COIL

COIL PRELOAD

- **Controls Relative Motion**
- **Minimizes Conductor Stress**
- **Ensures a Tight Winding**

Sources of Preload

Coil Axial Compression Flange

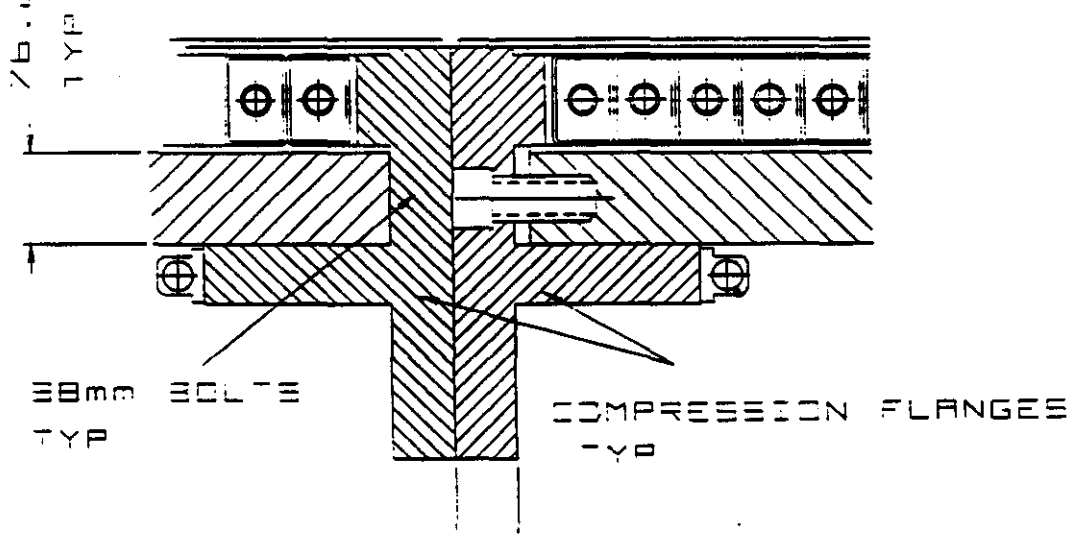

Bobbin Shell Tensioners

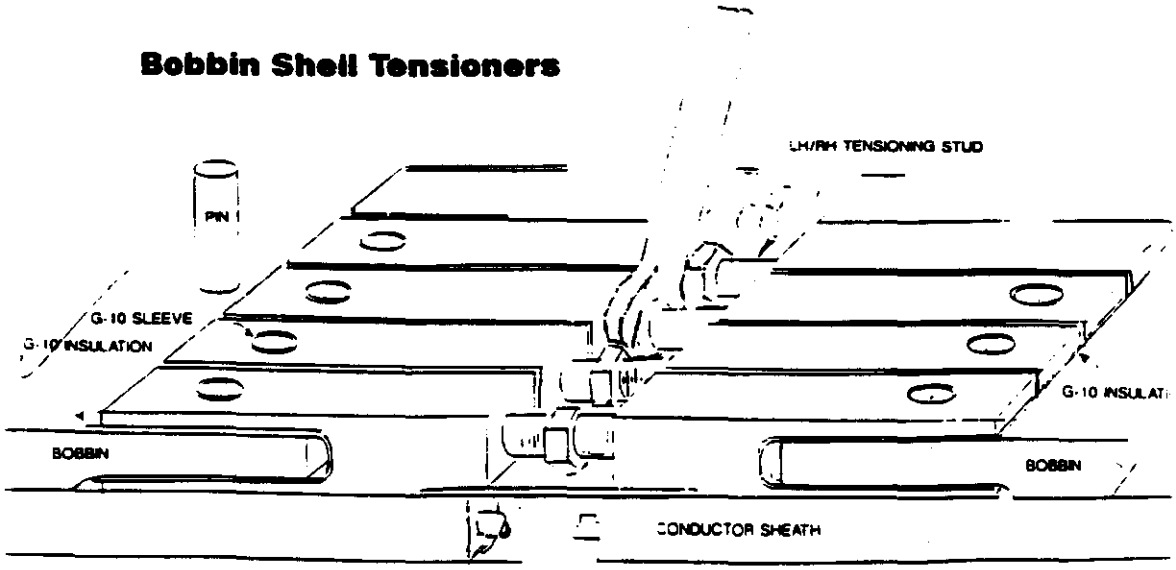

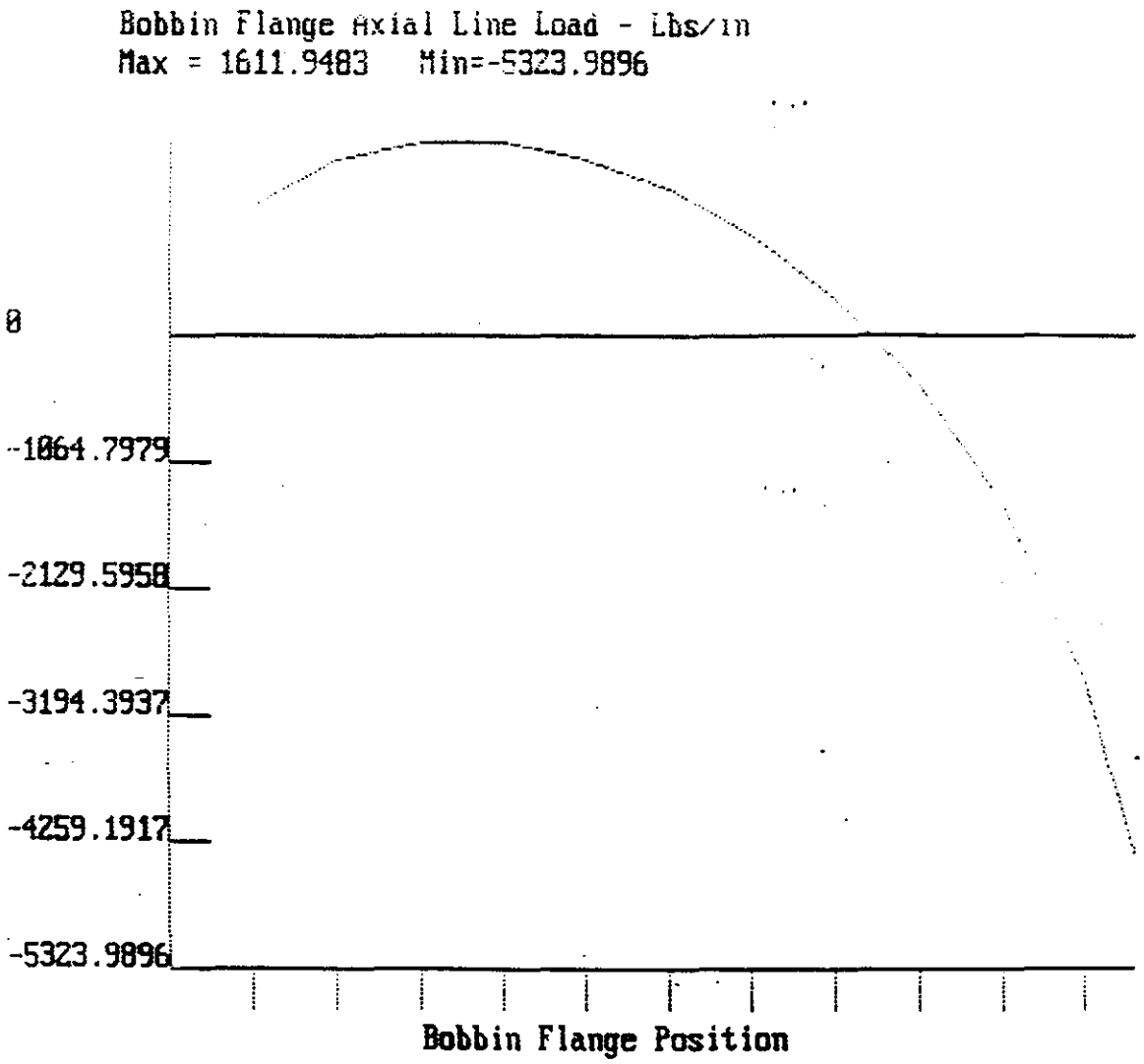
Bobbin Flange Axial Line Load - Lbs/in
Max = 1611.9483 Min=-5323.9896
0
-1064.7979
-2129.5958
-3194.3937
-4259.1917
-5323.9896
Bobbin Flange Position

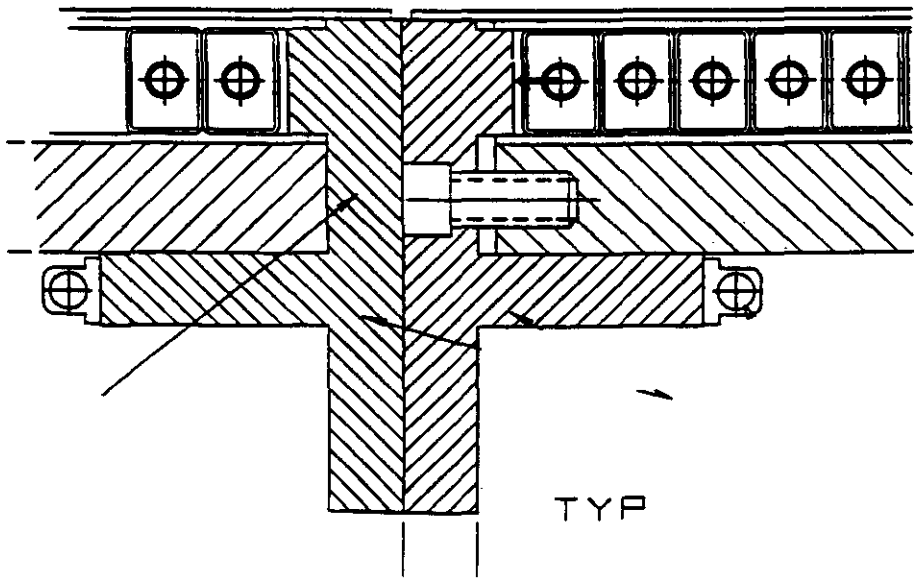
TYP

Single Conductor Model

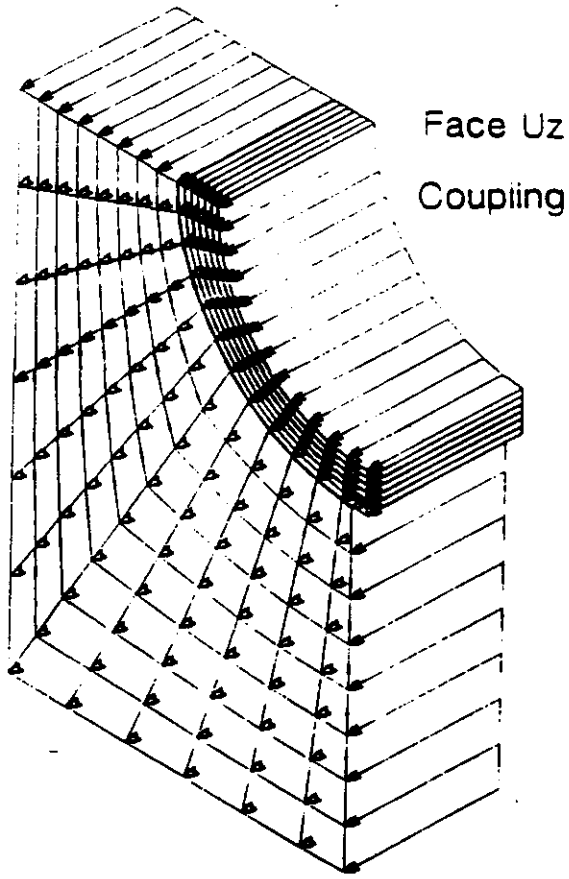

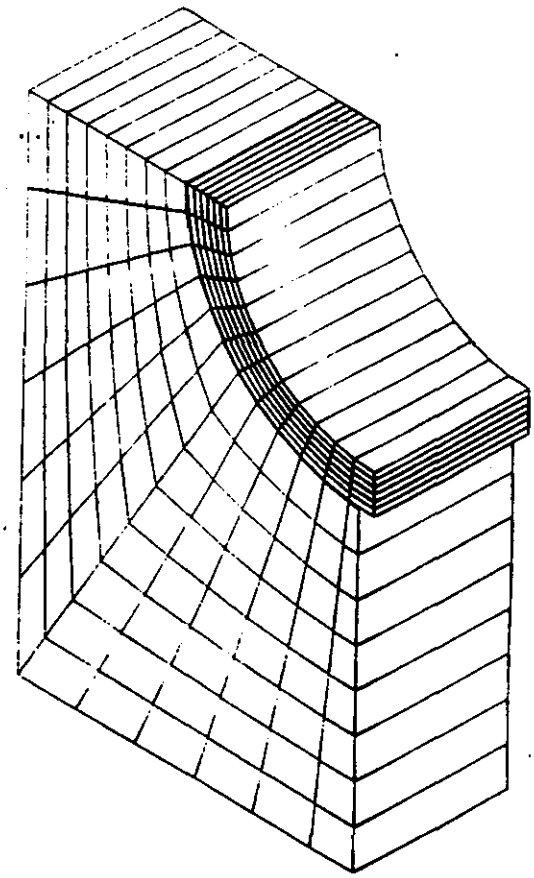

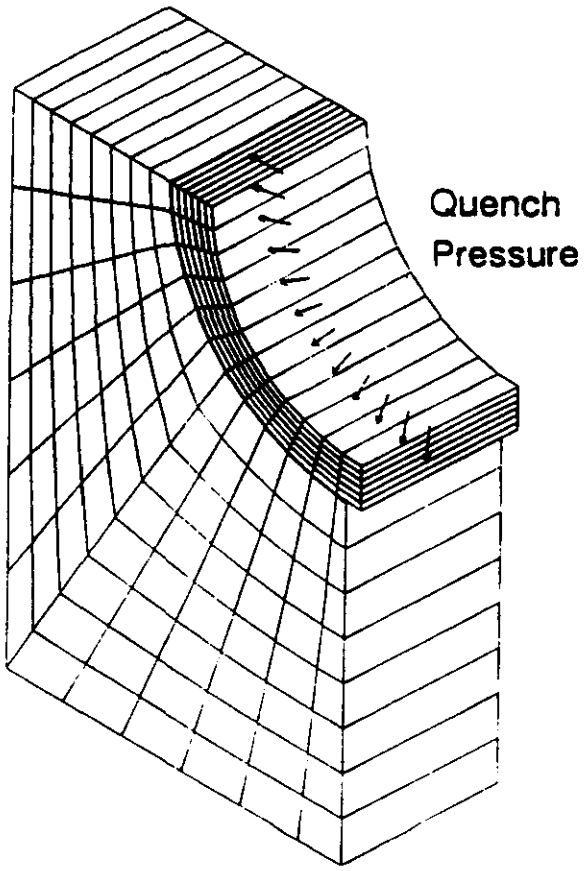

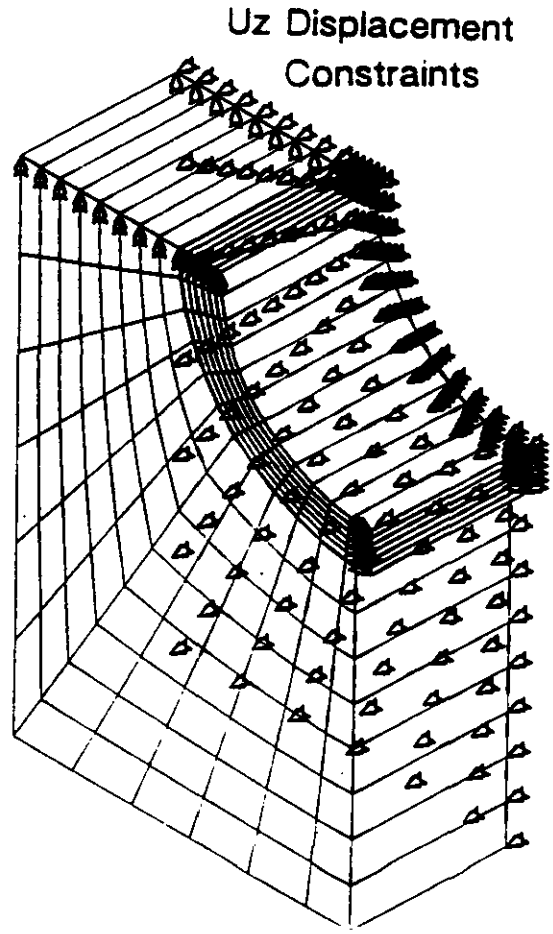

Single Bobbin Model

- Conductor Bobbin Interactions
- Cooldown Differential Contractions
- Bobbin Preload

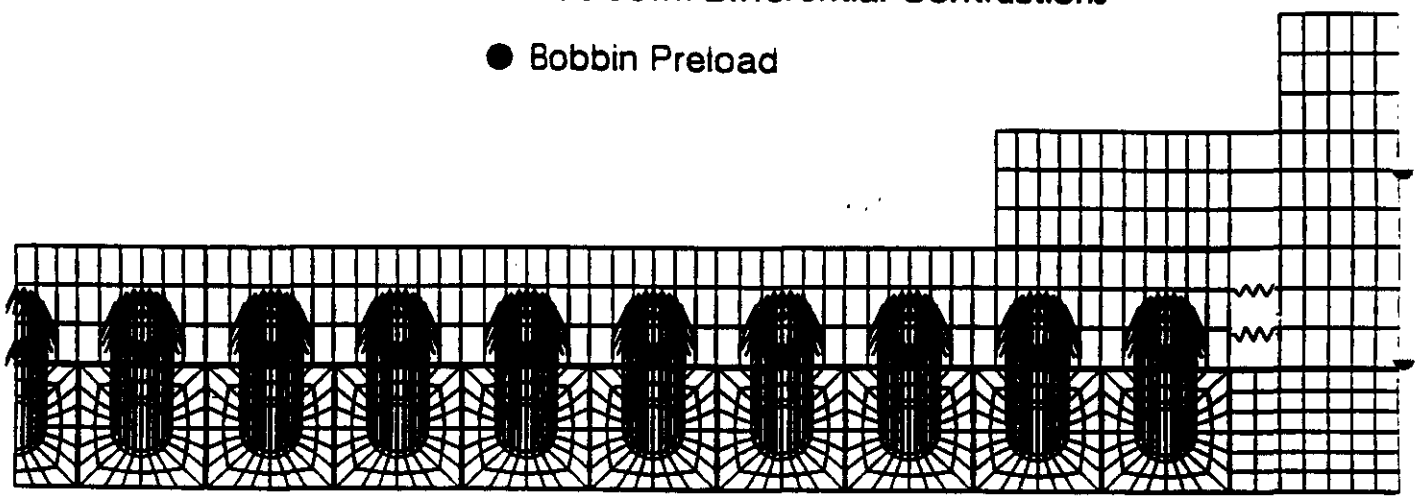

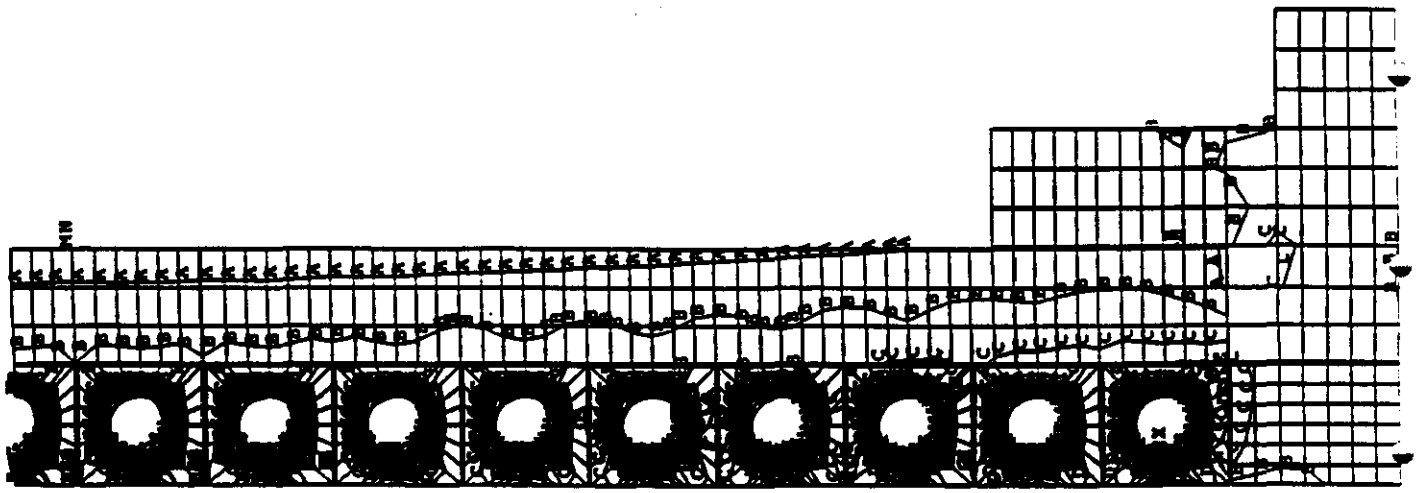

Cooldown Hoop Stress

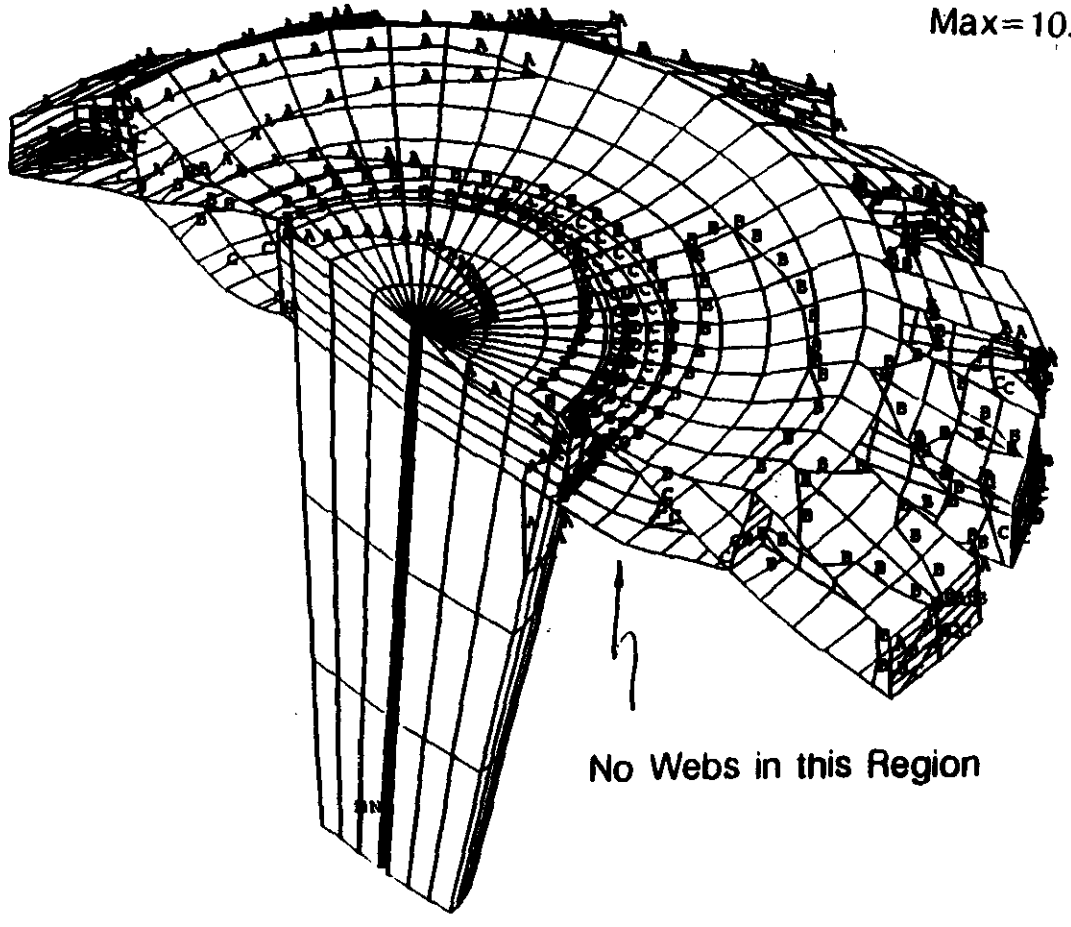

ANSYS 4.4A
FEB 28 1992
10:08:02
PLOT NO. 1
POST1 STRESS
STEP=1
ITER=8
SIGE (AVG)
TOP
DMX =0.154789
SMN =16.644
SMX =10720

XV =1
YV =1
ZV =1
DIST=412.424
YF =521.654
ZF =-176.915
PRECISE HIDDEN
A =611.277
B =1801
C =2990
D =4179
E =5368
F =6558
G =7747
H =8936
I =10125

Flux concent r Support 2"pl w/access 12MN DW+Mag Load

1

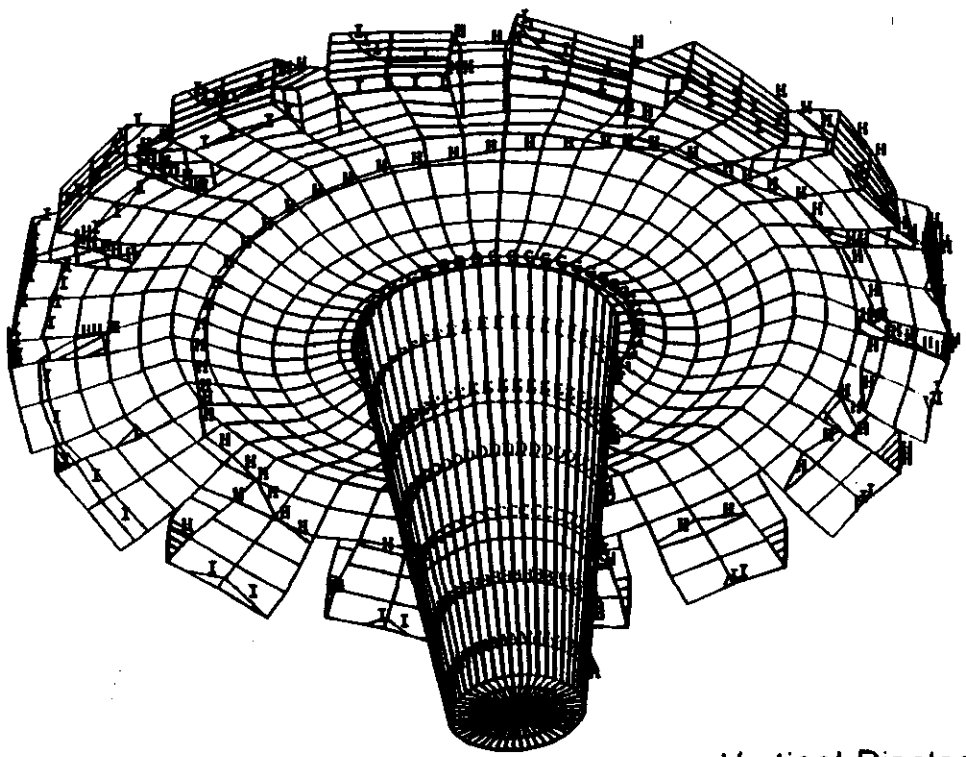

Vertical Displacement

Max=.125 inches

ANSYS 4.4A

FEB 28 1992

32:07:40

PLOT NO. 2

POST1 STRESS

STEP=1

ITER=8

UX

D GLOBAL

DMX =0.154789

SMN =-0.125581

SMX =0.003585

XV =1

YV =-1

ZV =-1

DIST=550.029

YF =521.654

PRECISE HIDDEN

A =-0.118405

B =-0.104054

C =-0.089702

D =-0.07535

E =-0.060998

F =-0.046646

G =-0.032294

H =-0.017943

I =-0.003591

Flux concentrator Support 2"pl w/access 12MN DW+Mag Load

1

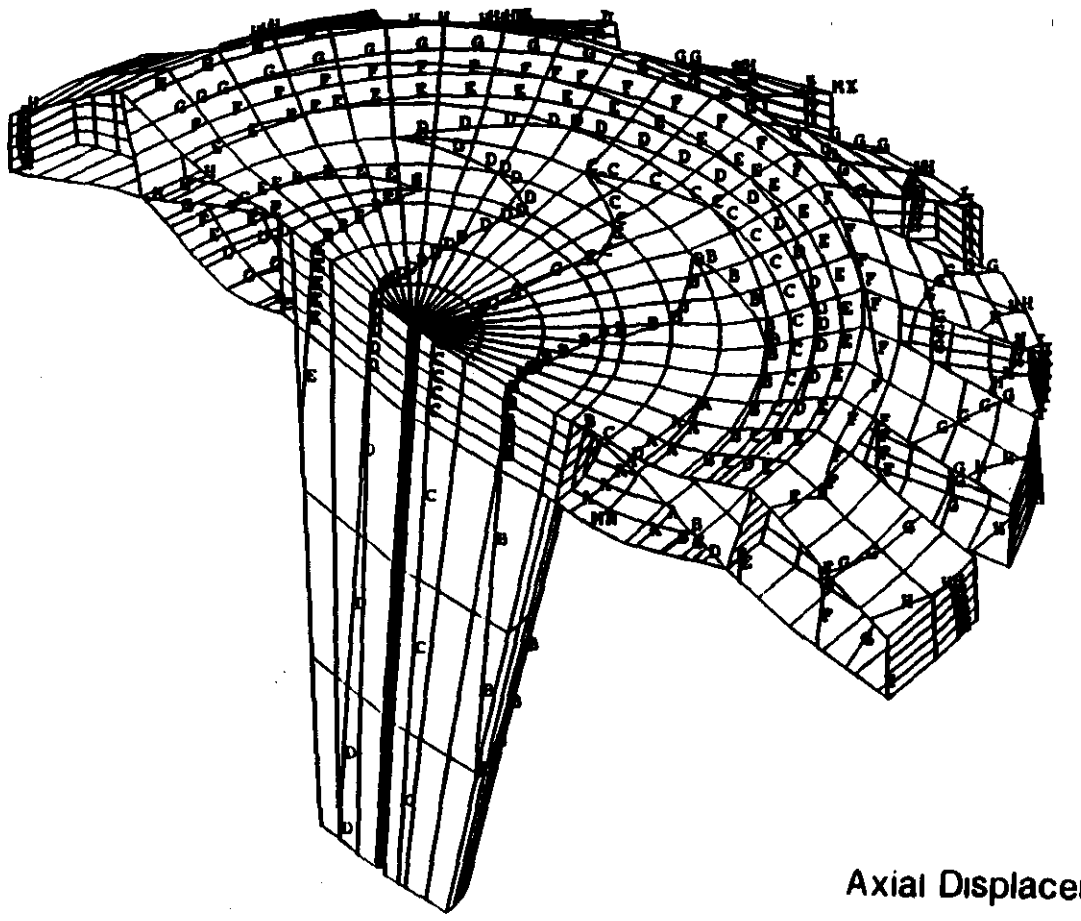

Axial Displacement

Max=.117 inches

ANSYS 4.4A

FEB 28 1992

10:08:35

PLOT NO. 2

POST1 STRESS

STEP=1

ITER=8

UY

D GLOBAL

DMX =0.154789

SMN =-0.117129

SMX =0.018489

XV =1

YV =1

ZV =1

DIST=412.424

YF =521.654

ZF =-176.915

PRECISE HIDDEN

A =-0.109595

B =-0.094526

C =-0.079457

D =-0.064389

E =-0.04932

F =-0.034252

G =-0.019183

H =-0.004114

I =0.010954

Flux concentrator Support 2"pl w/access 12MN DW+Mag Load

Superconducting Super Collider

Facilities and Installation

Coleman Johnson

Lawrence Livermore National Laboratory
April 1, 1992

Facilities overview:

Time constraints require the magnet to be assembled and partially tested above ground and lowered into the experimental hall for final testing

There are two major Magnet facilities for the above ground assembly:

- 1)The Coil Winding Facility
  - Located at IR8
  - Receive, inspect, prepare coil components
  - Wind insulated conductor onto individual bobbins
  - Package for transportation and storage

- 2)The Magnet Assembly facility
  - Located at IR5
  - Colocated with open pad for welding vessels
  - Arrange individual coils into coil subassemblies
  - Move subassemblies out to mate with vacuum vessels
  - Move back inside to complete vacuum vessels, feed-throughs, system check out
  - Final move out

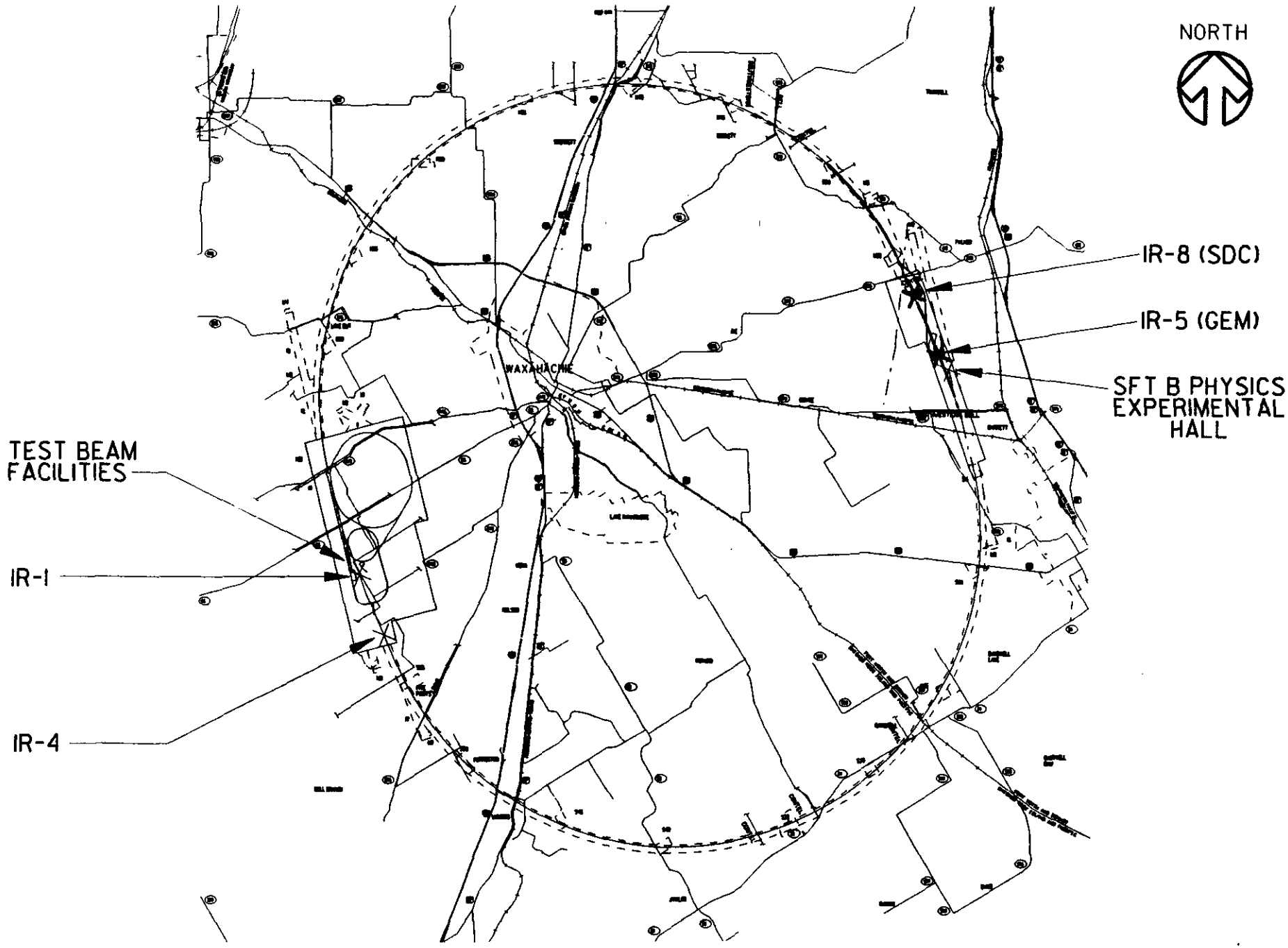

SSC EXPERIMENTAL AREA MAP

TVP/kh - 3/30/92 - R20000460 - R20000458

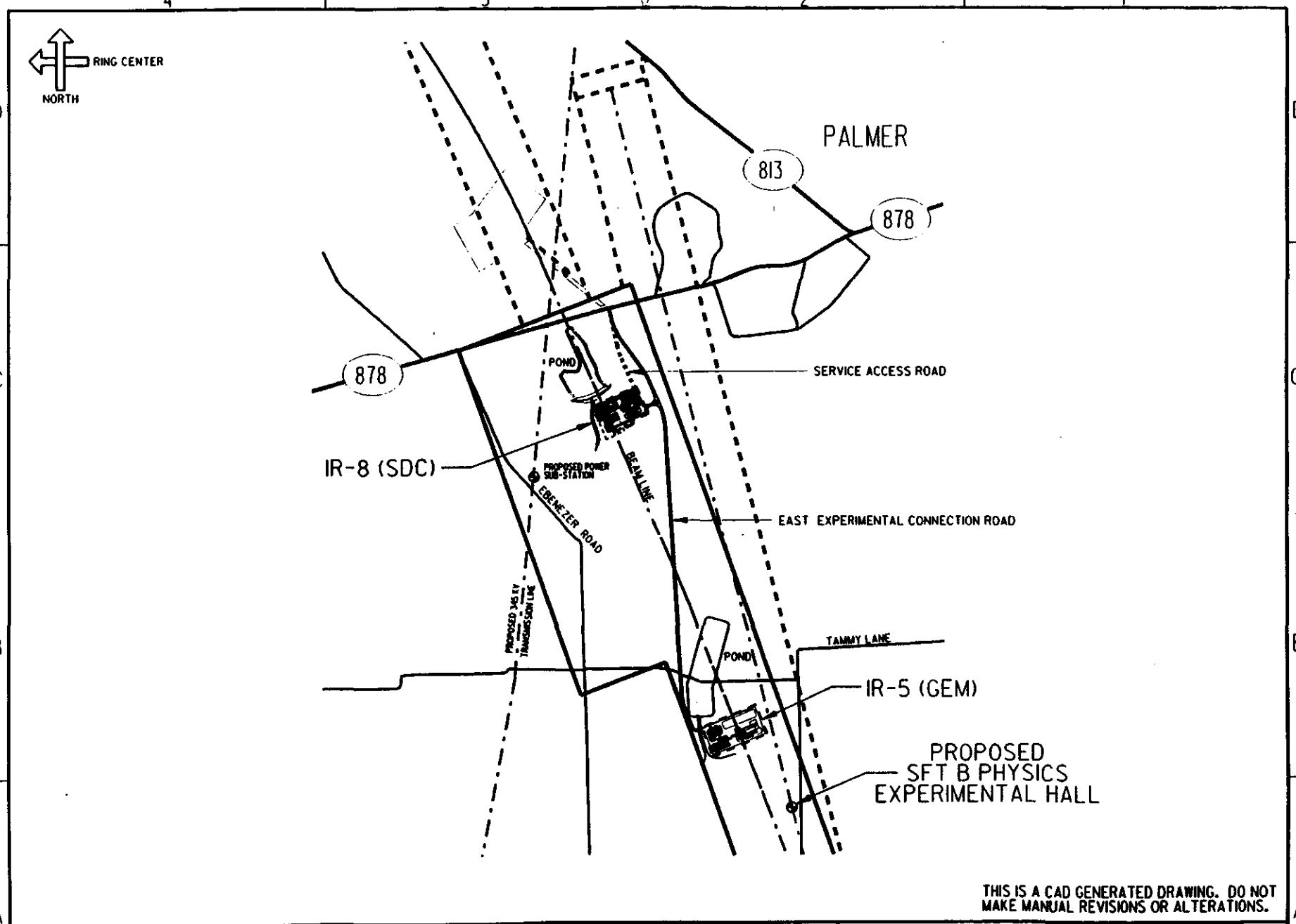

THIS IS A CAD GENERATED DRAWING. DO NOT MAKE MANUAL REVISIONS OR ALTERATIONS.

REV.	DATE	BY	SUB.	DESCRIPTION	APPR.

REF. FILES ATTACHED

DRAWN: HAWKES
CHECKED:
RESPONSIBLE OWNER: T. PROSAPIO
APPROVED
APPROVED
APPROVED
APPROVED

PHYSICS RESEARCH DIVISION

SSC
SUPERCONDUCTING SUPER COLLIDER LABORATORY
DALLAS, TEXAS

CONTRACT NUMBER: DE-AC35-89ER40486

SSC EXPERIMENTAL FACILITIES

EAST CAMPUS

SITE PLAN

SCALE: NONE
DATE: 3/30/92
SIZE: C
PROJECT NUMBER:
DRAWING NUMBER: R20000488
DRAWING CONTROL NUMBER: R20-000488
REVISION:
SHEET: 1 of 1

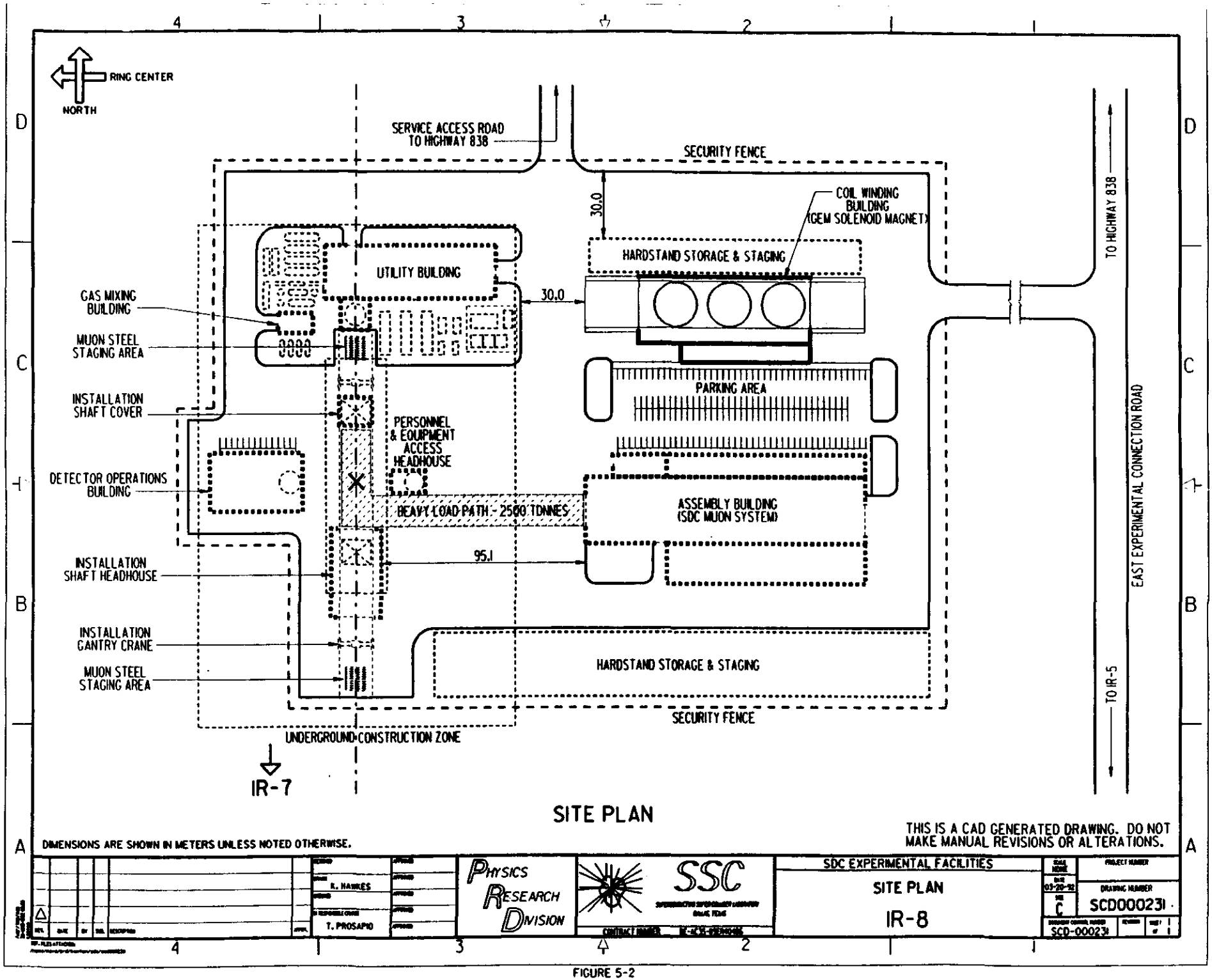
RING CENTER
NORTH
SERVICE ACCESS ROAD TO HIGHWAY 838
SECURITY FENCE
30.0
COIL WINDING BUILDING (GEM SOLENOID MAGNET)
HARDSTAND STORAGE & STAGING
UTILITY BUILDING
30.0
GAS MIXING BUILDING
MUON STEEL STAGING AREA
INSTALLATION SHAFT COVER
PERSONNEL & EQUIPMENT ACCESS HEADHOUSE
PARKING AREA
DETECTOR OPERATIONS BUILDING
BEAVY LOAD PATH - 2500 TONNES
ASSEMBLY BUILDING (SDC MUON SYSTEM)
95.1
INSTALLATION SHAFT HEADHOUSE
INSTALLATION GANTRY CRANE
MUON STEEL STAGING AREA
HARDSTAND STORAGE & STAGING
SECURITY FENCE
UNDERGROUND CONSTRUCTION ZONE
IR-7
TO HIGHWAY 838
EAST EXPERIMENTAL CONNECTION ROAD
TO IR-5
SITE PLAN
DIMENSIONS ARE SHOWN IN METERS UNLESS NOTED OTHERWISE.
THIS IS A CAD GENERATED DRAWING. DO NOT MAKE MANUAL REVISIONS OR ALTERATIONS.
R. HAWKES
T. PROSAPIO
PHYSICS RESEARCH DIVISION
SSC
SDC EXPERIMENTAL FACILITIES
SITE PLAN
IR-8
03-20-92
C
SCD000231
SCD-000231

FIGURE 5-2

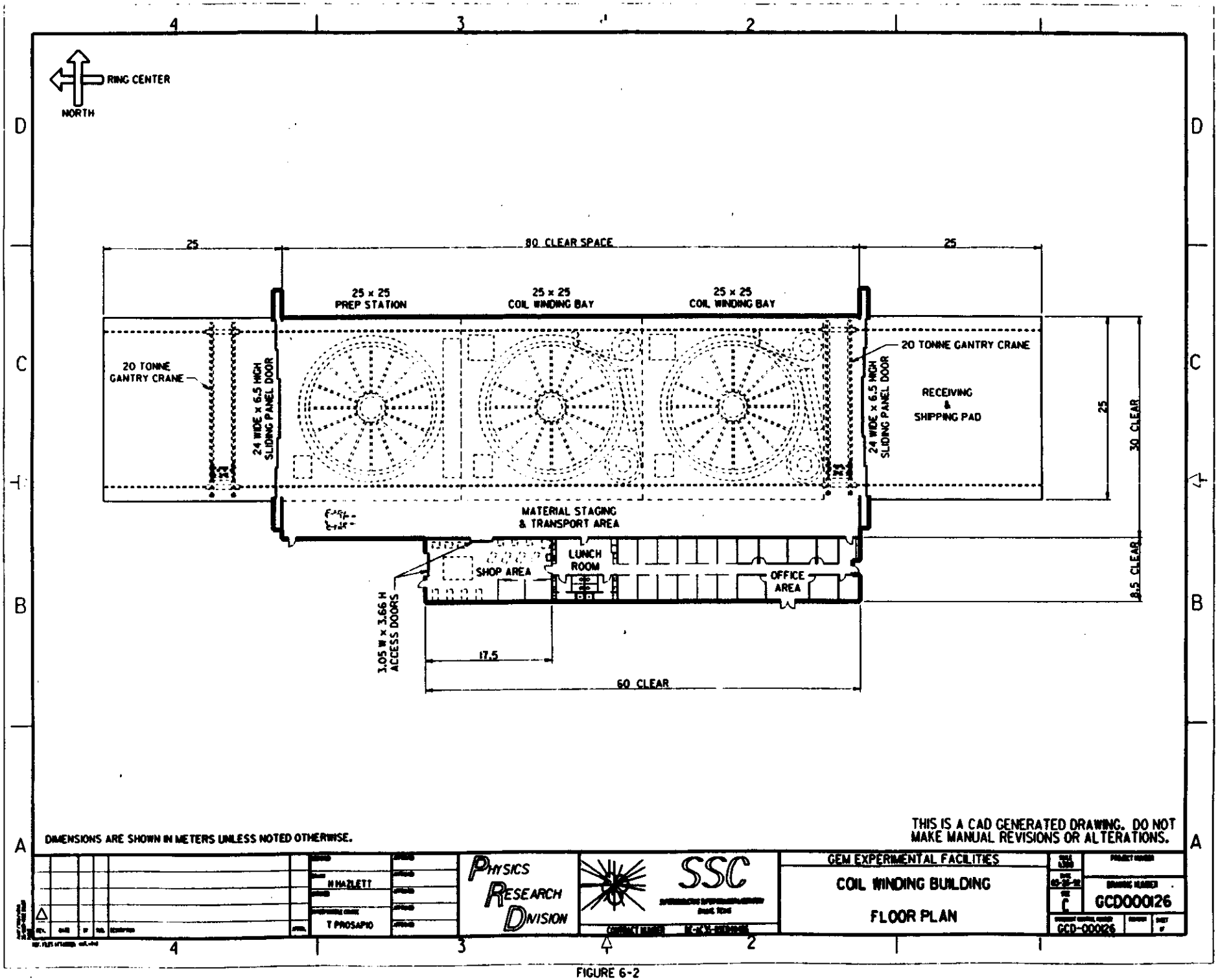
RING CENTER
NORTH
25
80 CLEAR SPACE
25
25 x 25
PREP STATION
25 x 25
COIL WINDING BAY
25 x 25
COIL WINDING BAY
20 TONNE
GANTRY CRANE
24 WIDE x 6.5 HIGH
SLIDING PANEL DOOR
20 TONNE GANTRY CRANE
24 WIDE x 6.5 HIGH
SLIDING PANEL DOOR
RECEIVING
&
SHIPPING PAD
25
30 CLEAR
MATERIAL STAGING
& TRANSPORT AREA
LUNCH
ROOM
SHOP AREA
OFFICE
AREA
8.5 CLEAR
3.05 W x 3.66 H
ACCESS DOORS
17.5
60 CLEAR
DIMENSIONS ARE SHOWN IN METERS UNLESS NOTED OTHERWISE.
THIS IS A CAD GENERATED DRAWING. DO NOT
MAKE MANUAL REVISIONS OR ALTERATIONS.
H HAZLETT
T PROSAPIO
PHYSICS
RESEARCH
DIVISION
SSC
GEM EXPERIMENTAL FACILITIES
COIL WINDING BUILDING
FLOOR PLAN
GCD000126
GCD-000126

FIGURE 6-2

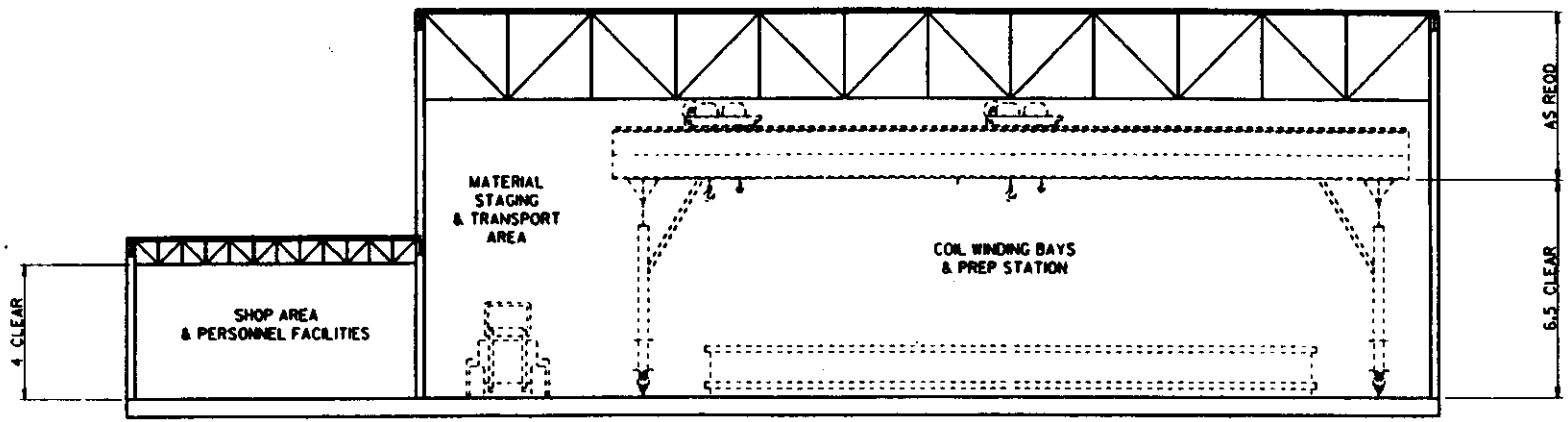

DIMENSIONS ARE SHOWN IN METERS UNLESS NOTED OTHERWISE.

THIS IS A CAD GENERATED DRAWING. DO NOT MAKE MANUAL REVISIONS OR ALTERATIONS.

H HAZLETT	PHYSICS RESEARCH DIVISION	SSC	GEM EXPERIMENTAL FACILITIES
T PROSAPIO			COIL WINDING BUILDING
			CROSS SECTION
			DRAWING NUMBER GCD000127
			GCD-000127

FIGURE 6-3

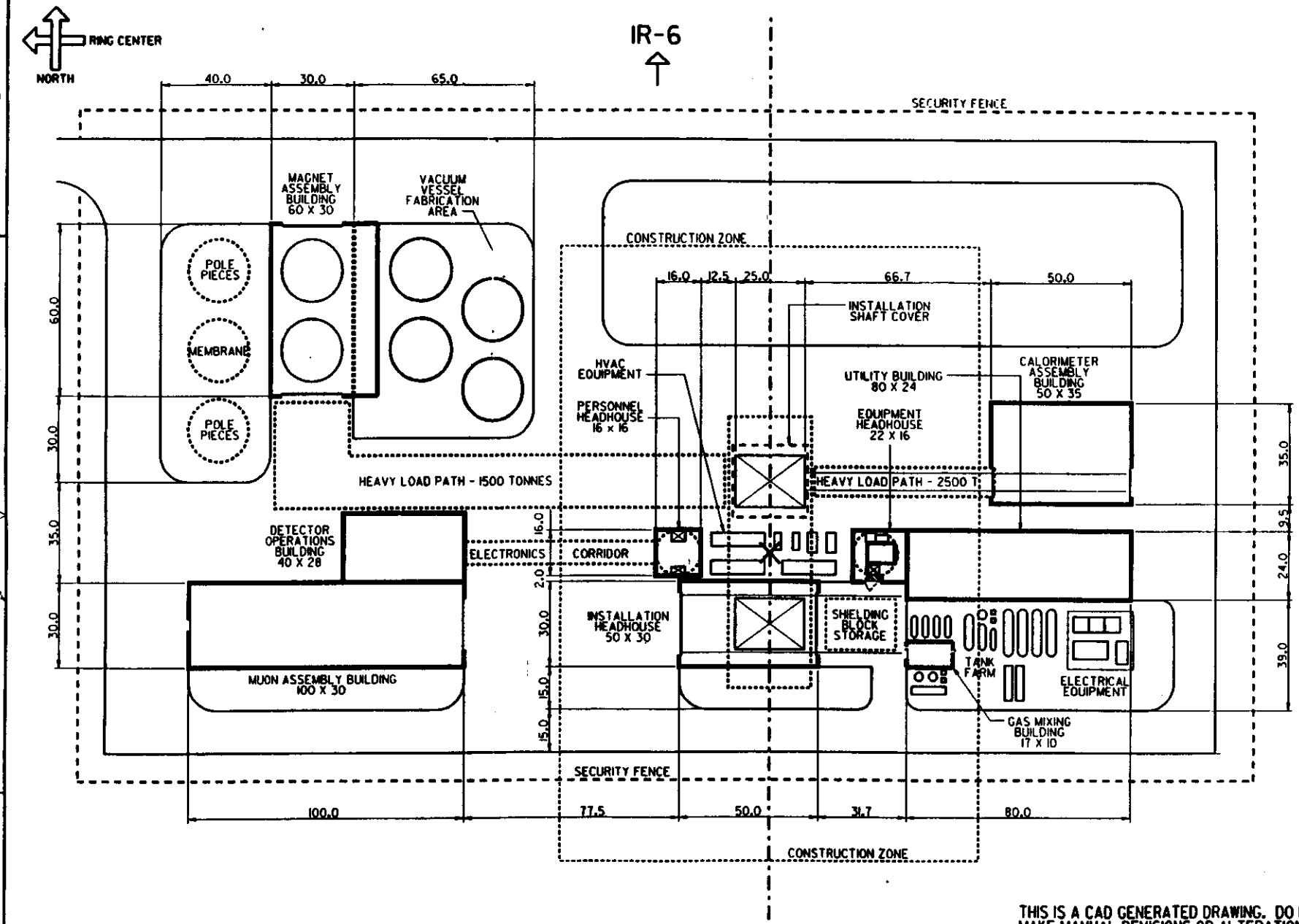

DIMENSIONS ARE IN SHOWN IN METERS UNLESS NOTED OTHERWISE.

THIS IS A CAD GENERATED DRAWING. DO NOT MAKE MANUAL REVISIONS OR ALTERATIONS.

PHYSICS RESEARCH DIVISION

SSC

GEM EXPERIMENTAL FACILITIES

SITE PLAN

IR-5

DRAWING NUMBER GCD000133

GCD-000133

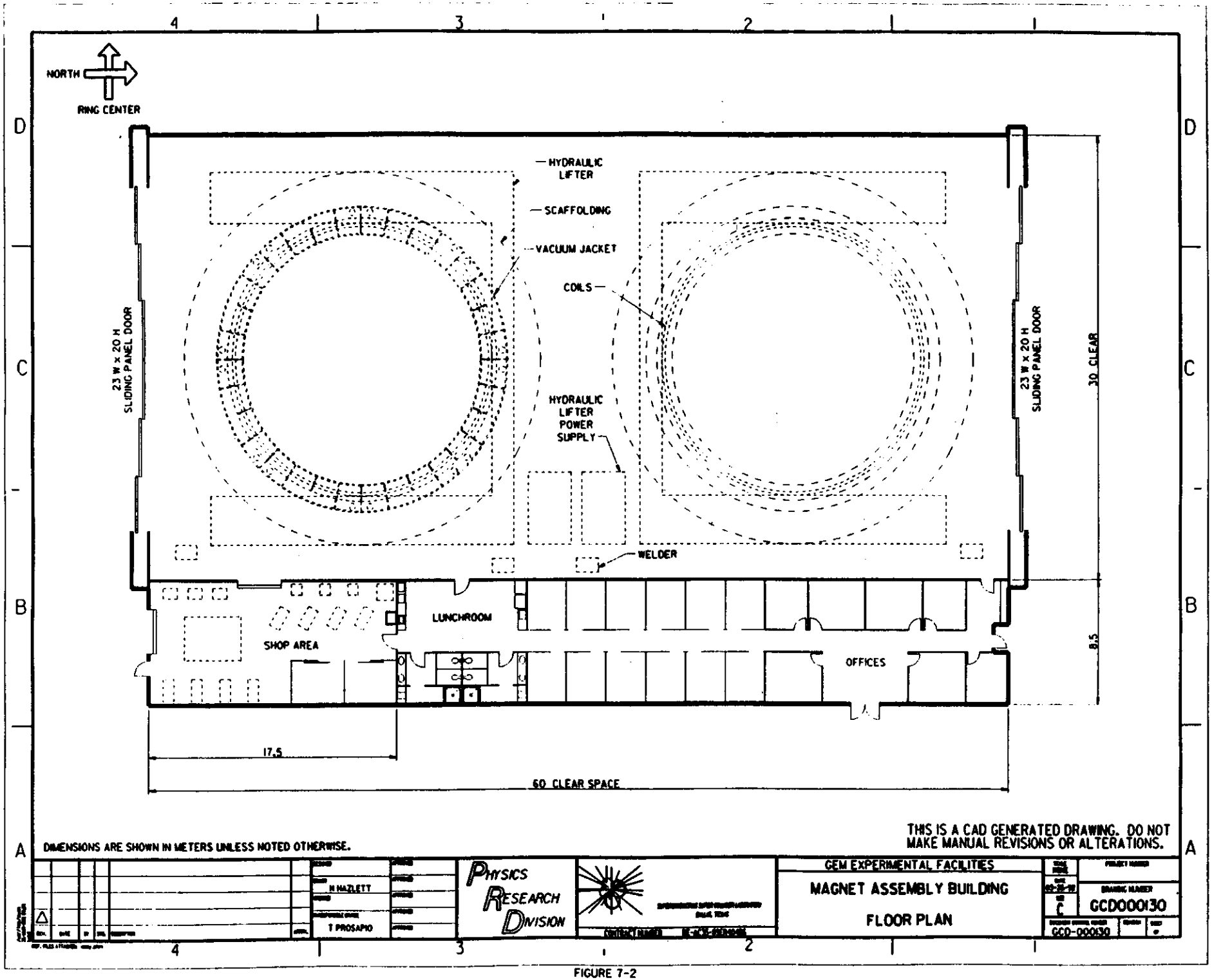
NORTH
RING CENTER
HYDRAULIC LIFTER
SCAFFOLDING
VACUUM JACKET
COILS
HYDRAULIC LIFTER POWER SUPPLY
WELDER
23 W x 20 H SLIDING PANEL DOOR
23 W x 20 H SLIDING PANEL DOOR
30 CLEAR
8.5
LUNCHROOM
SHOP AREA
OFFICES
17.5
60 CLEAR SPACE
DIMENSIONS ARE SHOWN IN METERS UNLESS NOTED OTHERWISE.
THIS IS A CAD GENERATED DRAWING. DO NOT MAKE MANUAL REVISIONS OR ALTERATIONS.
N HAZLETT
T PROSAPIO
PHYSICS RESEARCH DIVISION
GEM EXPERIMENTAL FACILITIES
MAGNET ASSEMBLY BUILDING
FLOOR PLAN
GCD000130
GCD-000130

FIGURE 7-2

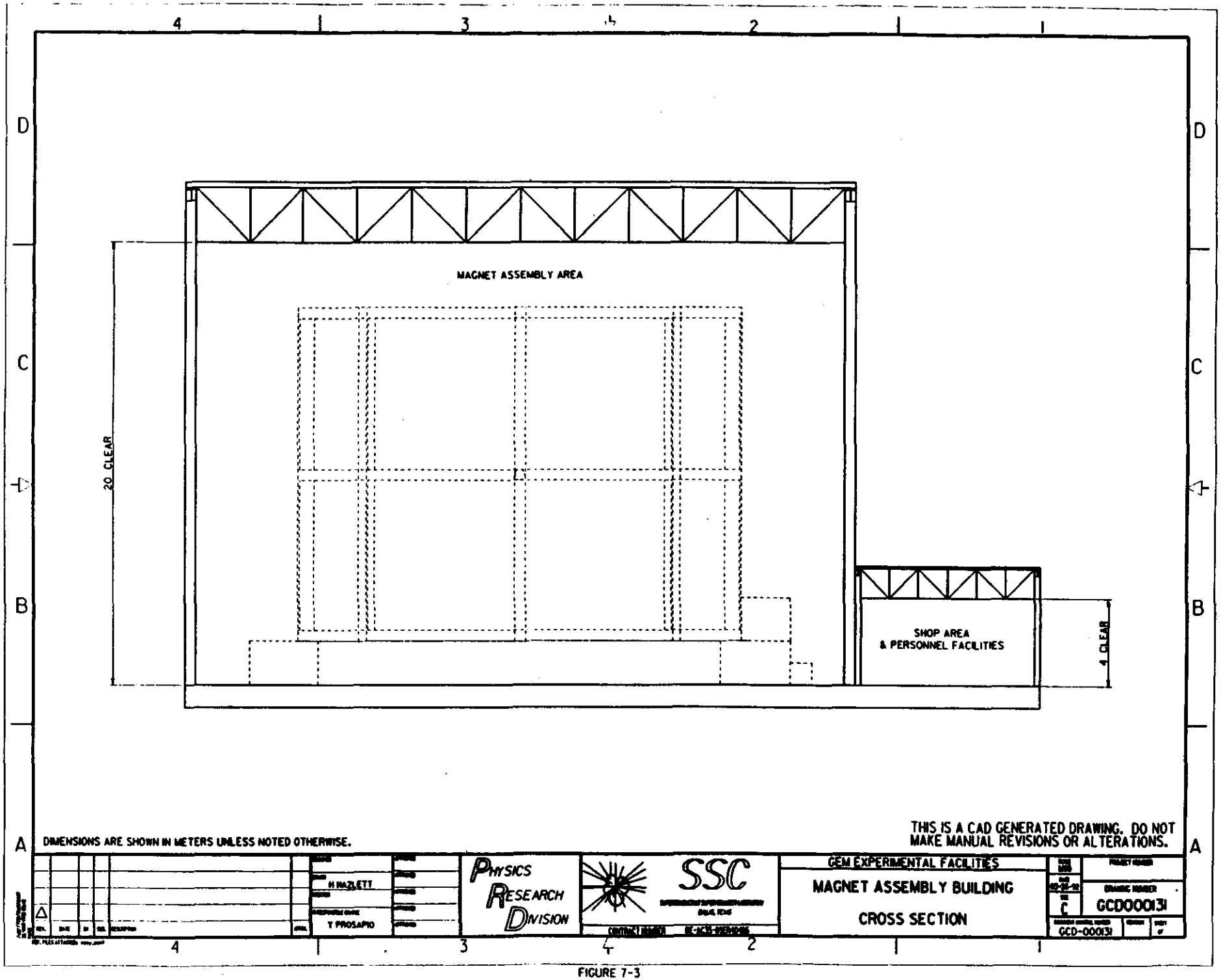
MAGNET ASSEMBLY AREA
20 CLEAR
SHOP AREA
& PERSONNEL FACILITIES
4 CLEAR
DIMENSIONS ARE SHOWN IN METERS UNLESS NOTED OTHERWISE.
THIS IS A CAD GENERATED DRAWING. DO NOT MAKE MANUAL REVISIONS OR ALTERATIONS.
H HAZLETT
T PROSAPIO
PHYSICS RESEARCH DIVISION
SSC
GEM EXPERIMENTAL FACILITIES
MAGNET ASSEMBLY BUILDING
CROSS SECTION
GCD000131
GCD-000131

FIGURE 7-3

Installation scheme

•There are five major components of the magnet system:

1)South Flux Concentrator, with support systems
2)South magnet assembly, with support systems
3)Central Membrane assembly, with support systems
4)North magnet assembly, with support systems
5)NorthFlux Concentrator, with support systems

•These will be lowered into the Underground Hall in this order

•The five components will be joined, tested as a system, then opened
•The testing will include complete operation and field mapping
•After testing, the magnet halves will be moved away from the Central Membrane to allow installation of other systems
•The magnet will be closed, leaving the Flux oncentrators away, to allow installation of the last Muon Chambers

•The Flux Concentrators will be closed, joined to the vacuum vessel

ISO-VIEW

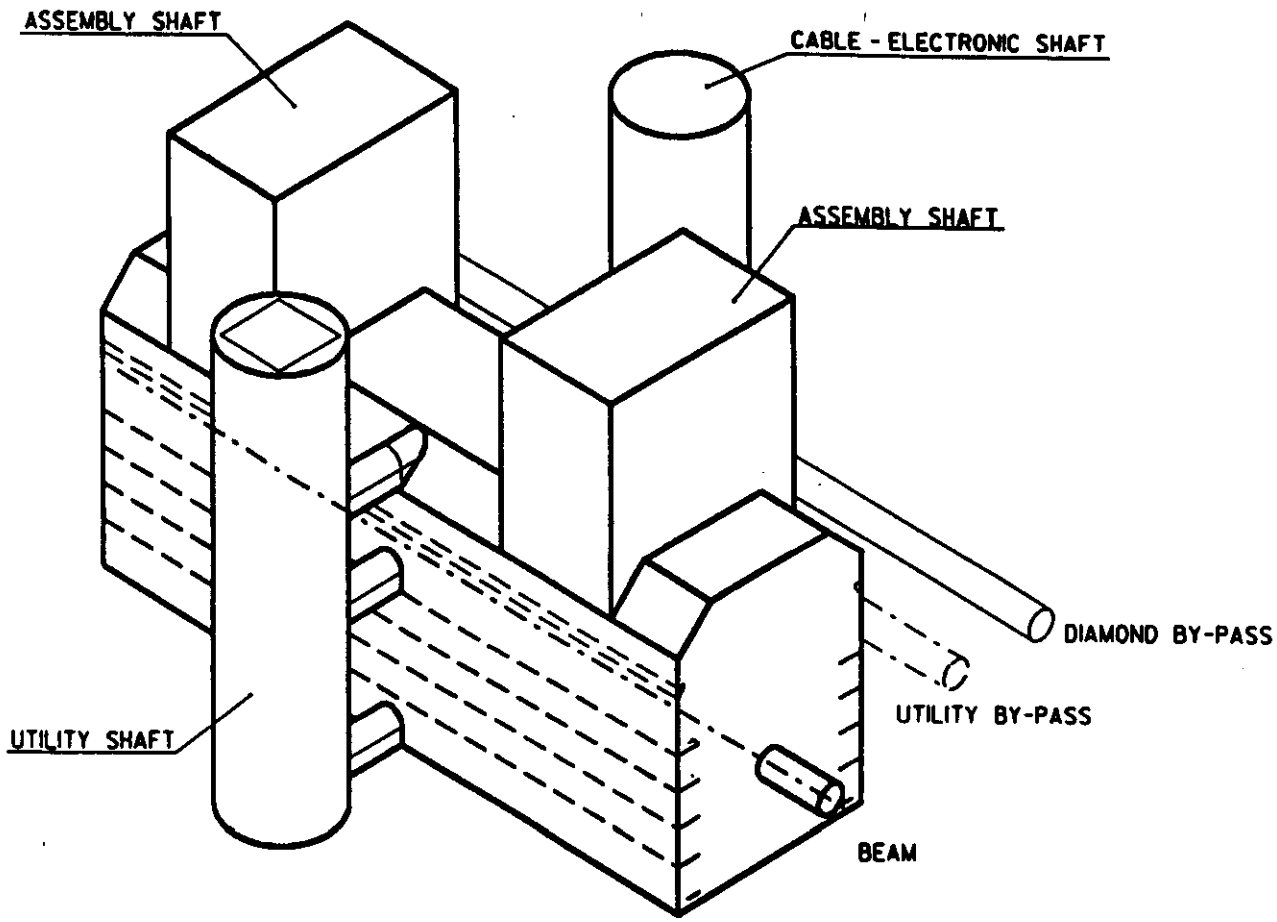

SSC

GEM 'S HALL -30
ISO - VIEW

GCD - 000 098

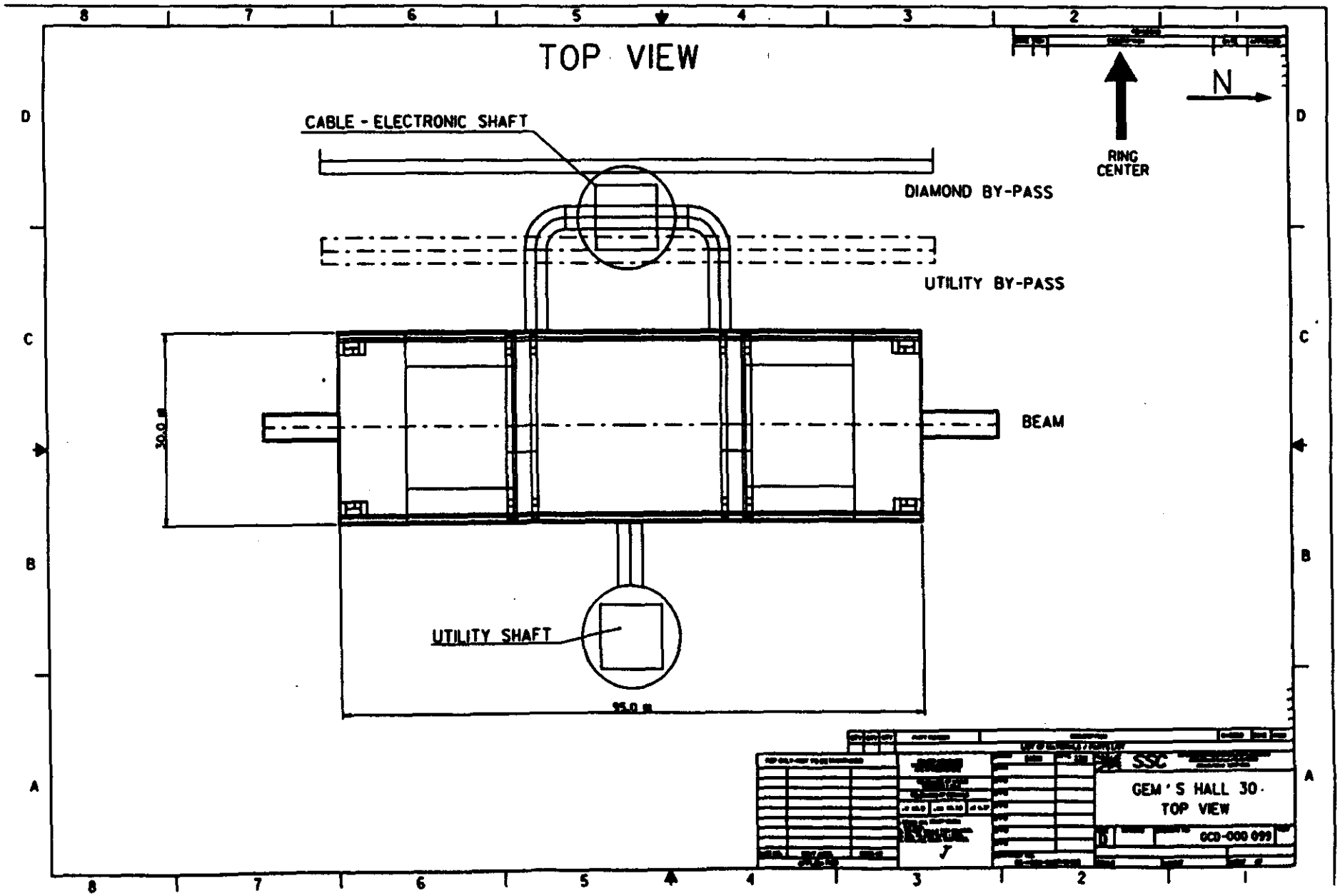
TOP VIEW
N
RING CENTER
CABLE - ELECTRONIC SHAFT
DIAMOND BY-PASS
UTILITY BY-PASS
BEAM
30.0 m
UTILITY SHAFT
95.0 m
SSC
GEM'S HALL 30
TOP VIEW
GCD-000 099

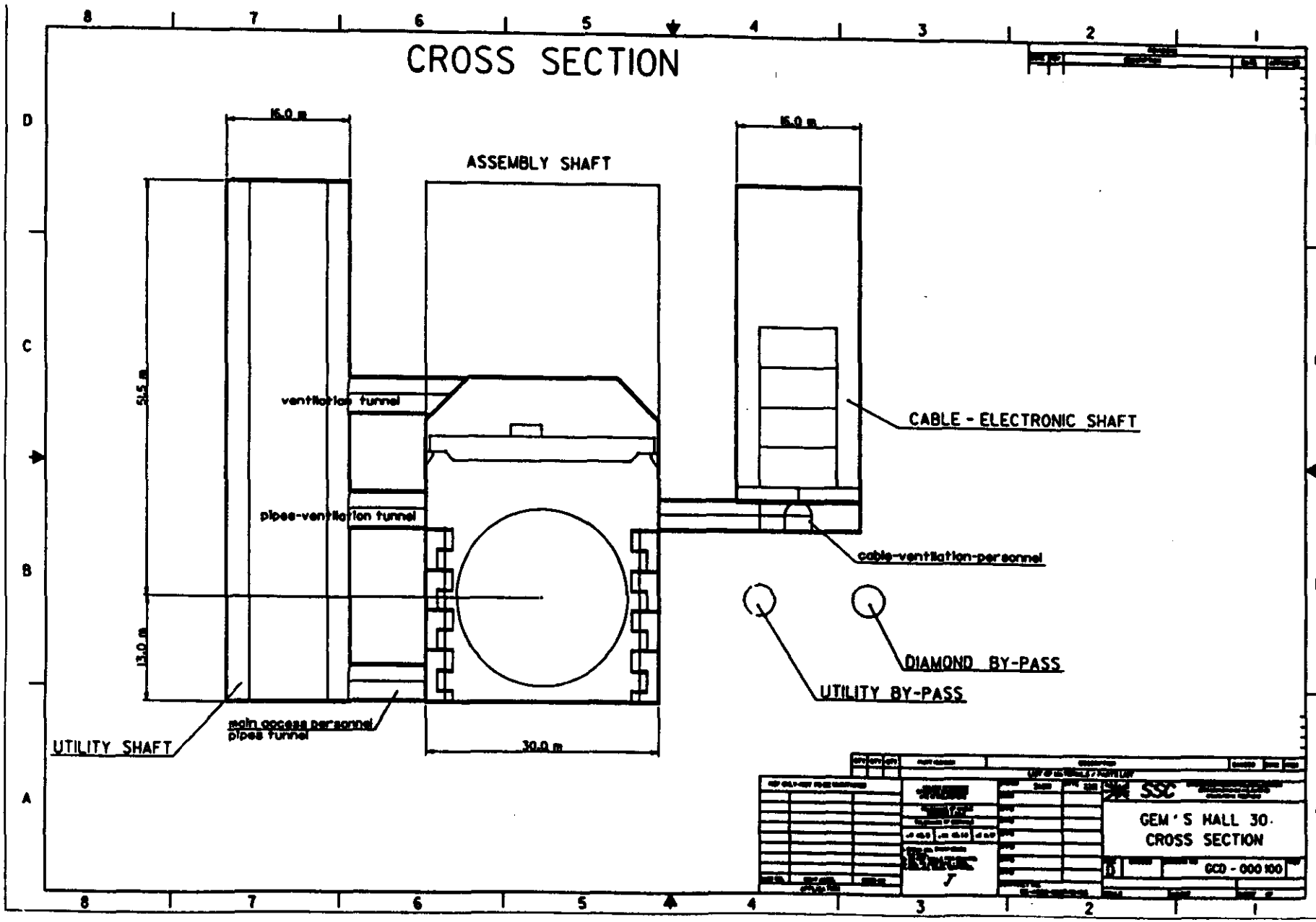
CROSS SECTION
15.0 m
15.0 m
ASSEMBLY SHAFT
51.5 m
13.0 m
ventilation tunnel
pipes-ventilation tunnel
CABLE - ELECTRONIC SHAFT
cable-ventilation-personnel
DIAMOND BY-PASS
UTILITY BY-PASS
UTILITY SHAFT
main access personnel
pipes tunnel
30.0 m
SSC
GEM'S HALL 30
CROSS SECTION
GCD - 000100

PHASE 4

INSTALL MAGNET FLUX CONCENTRATOR _SOUTH_ - MAY 1996

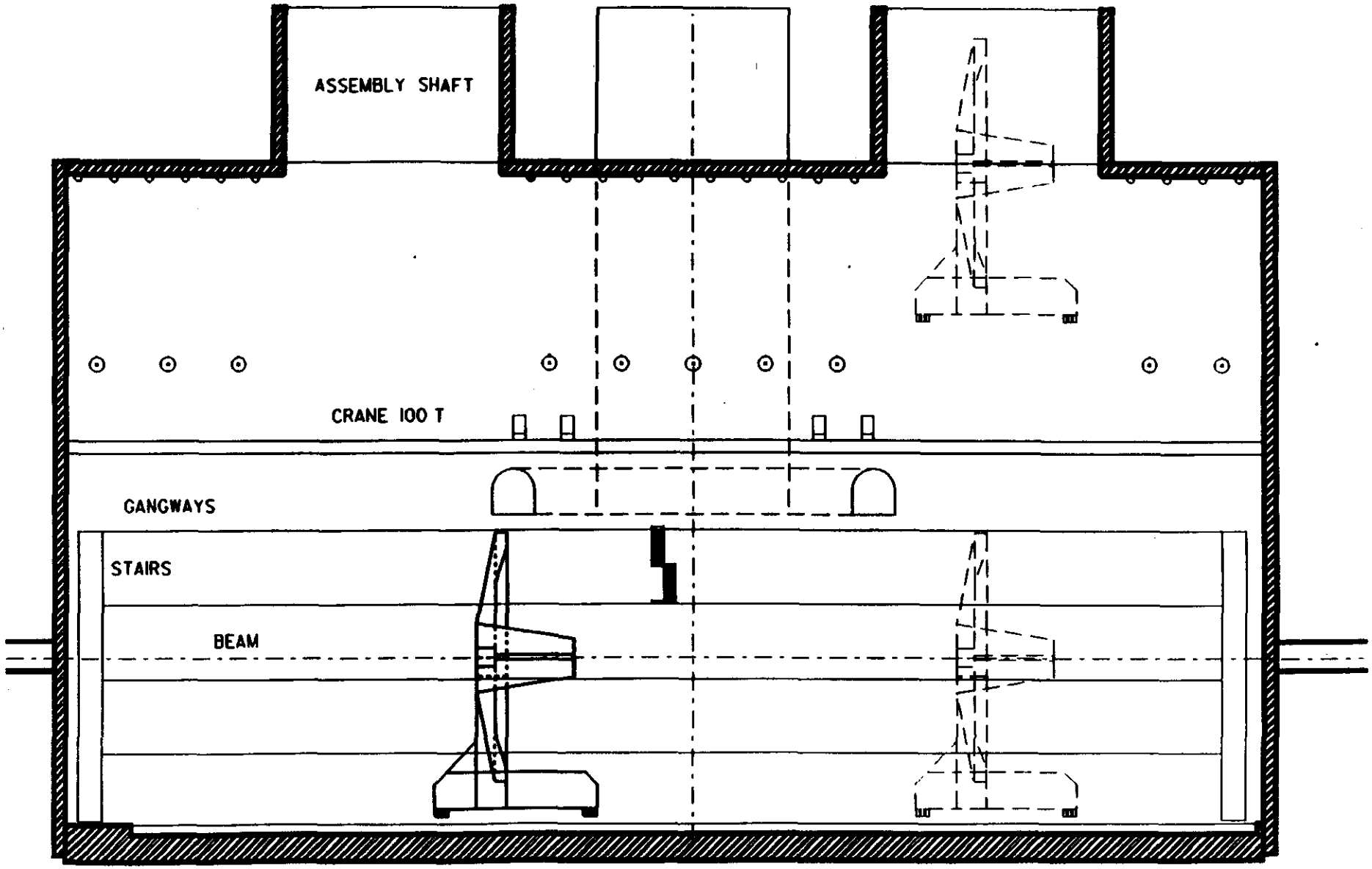

PHASE 5

INSTALL MAGNET HALF COIL _SOUTH_ - MAY 1996

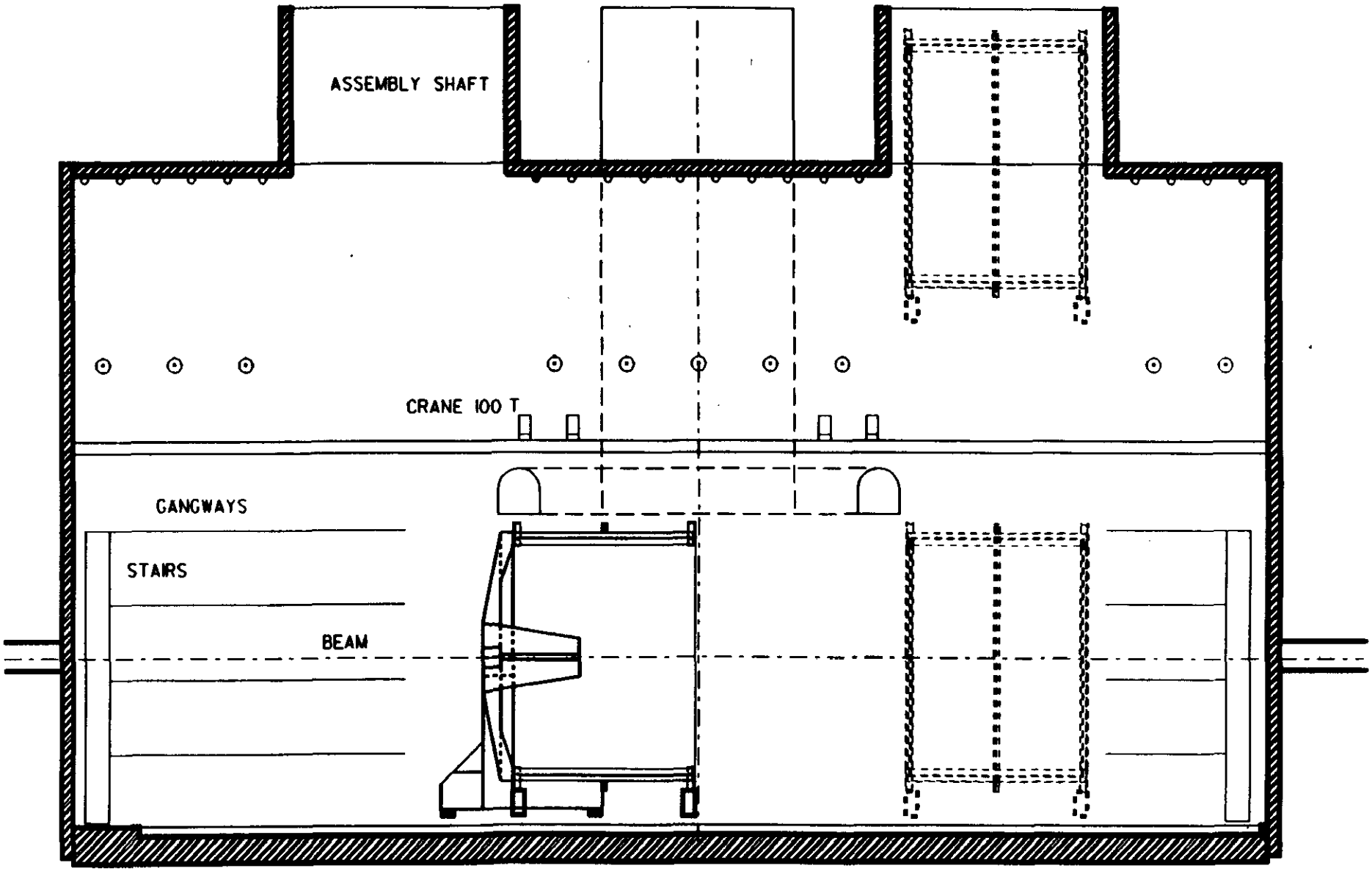

PHASE 6

INSTALL CENTRAL MEMBRANE-BARREL CALORIMETER - JUNE 1996

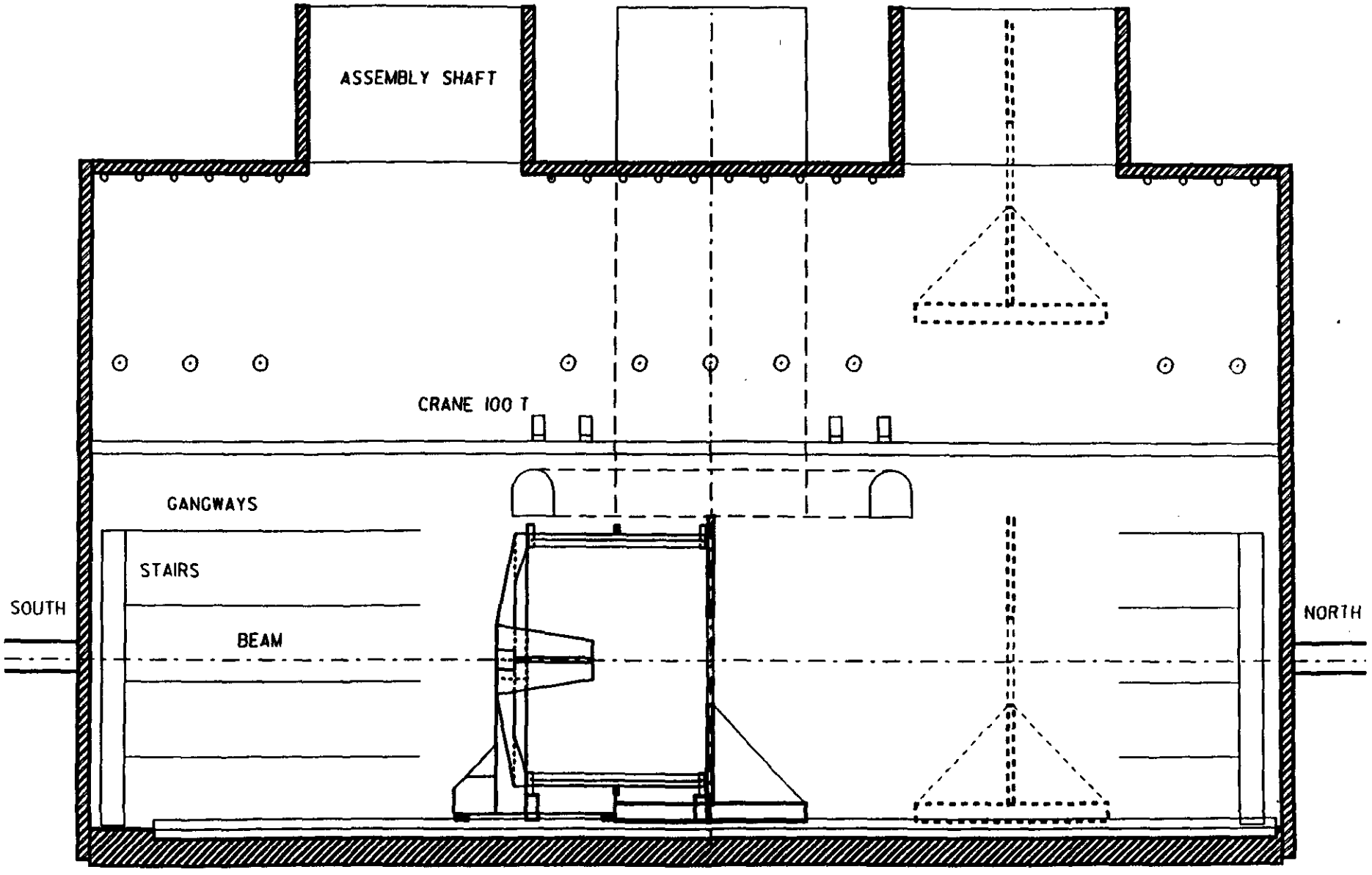

PHASE 7

INSTALL MAGNET HALF COIL _NORTH_ - JUNE 1996

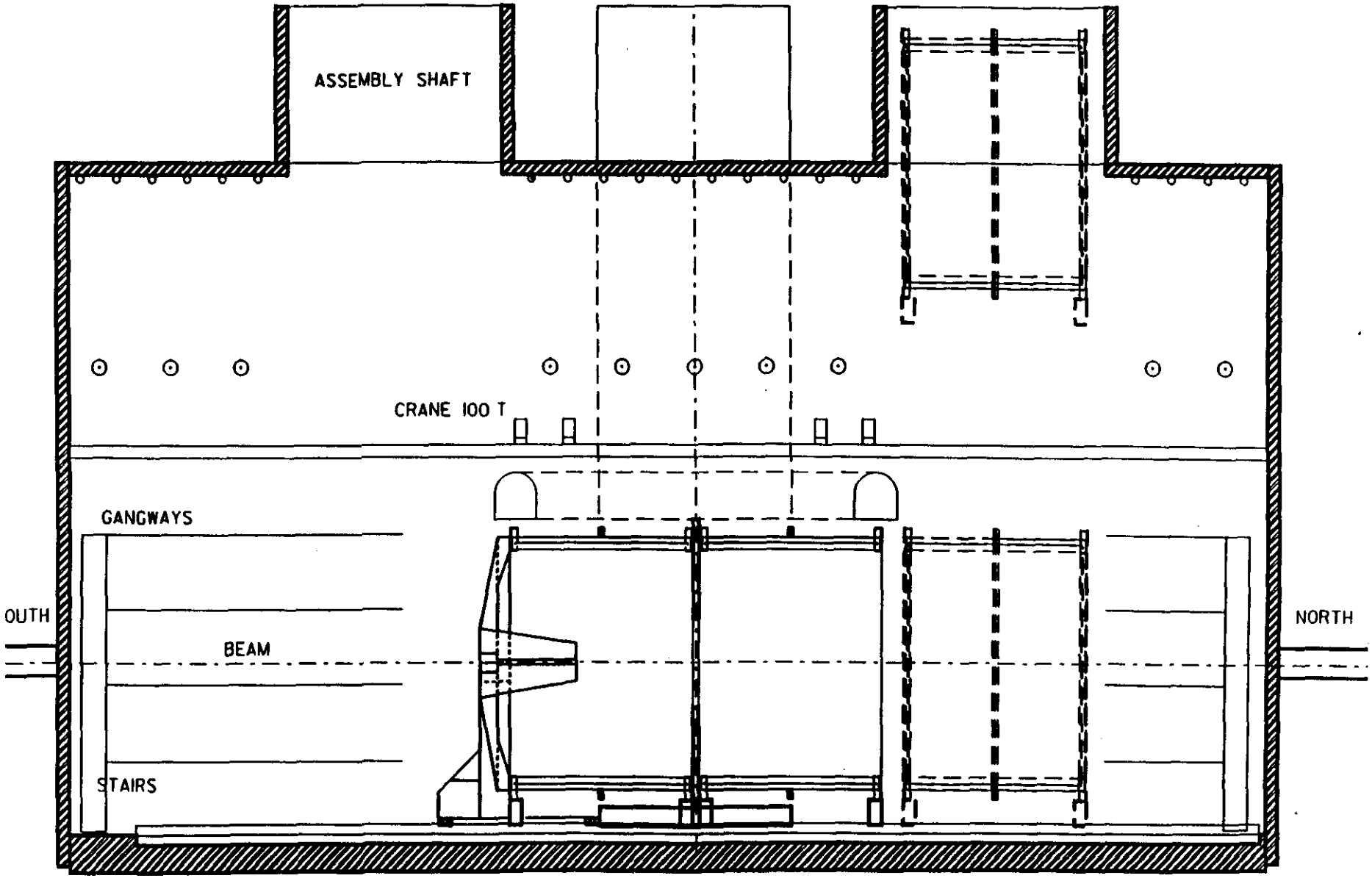

PHASE 8

INSTALL MAGNET FLUX CONCENTRATOR _NORTH_ - JUNE 1996

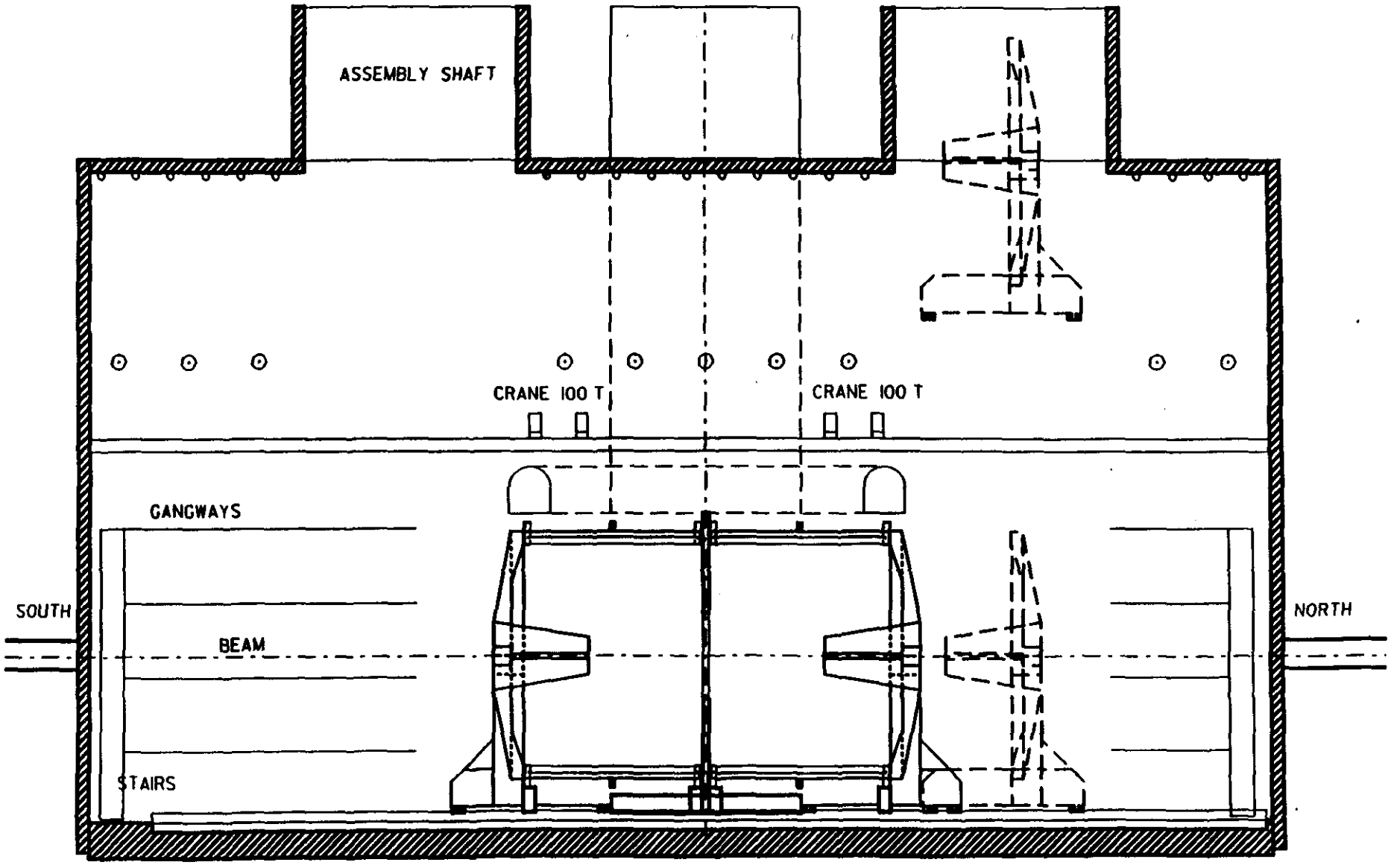

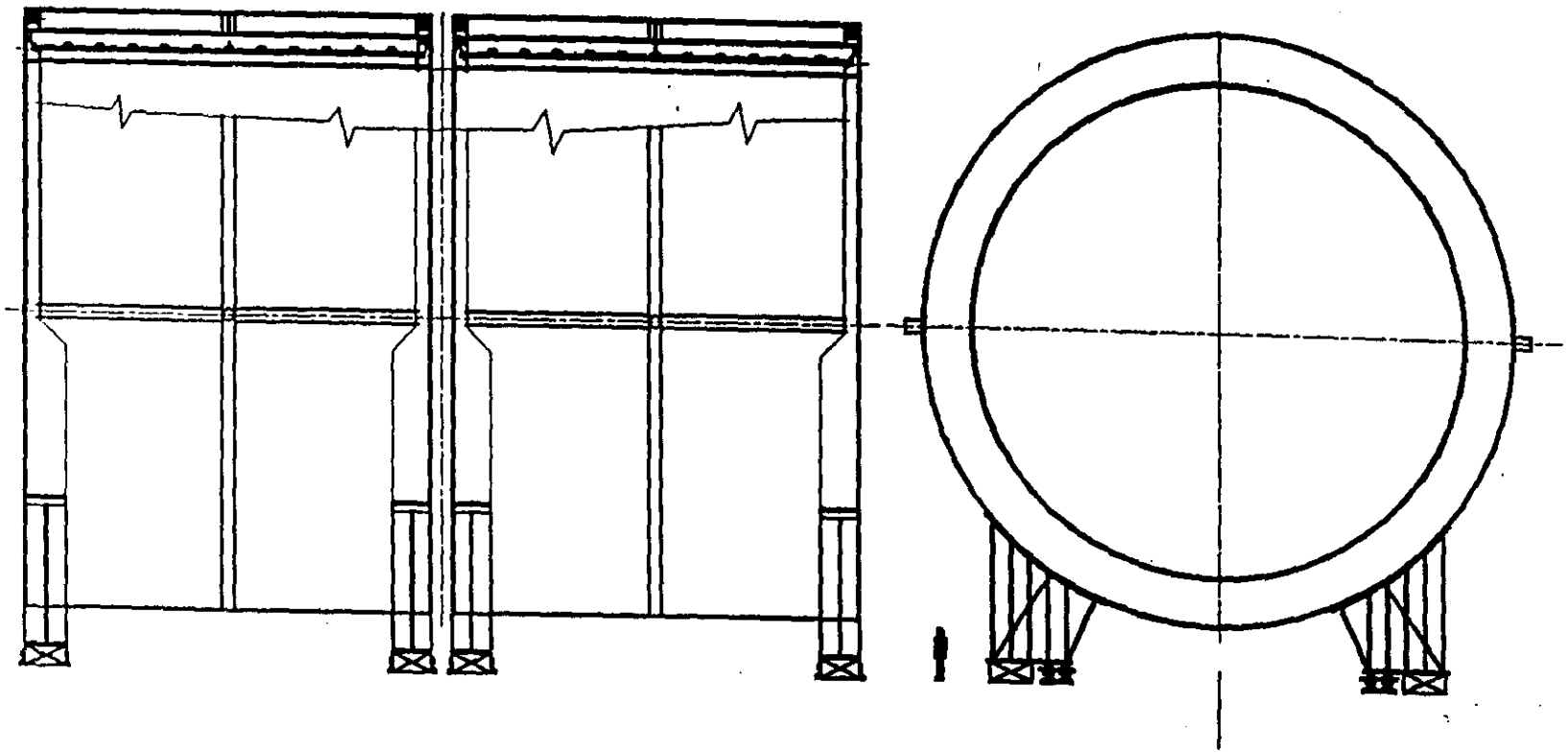

GEM MAGNET, VESSEL AND
SUPPORT STRUCTURE

3/6/92

DIM'S IN mm (INCHES)

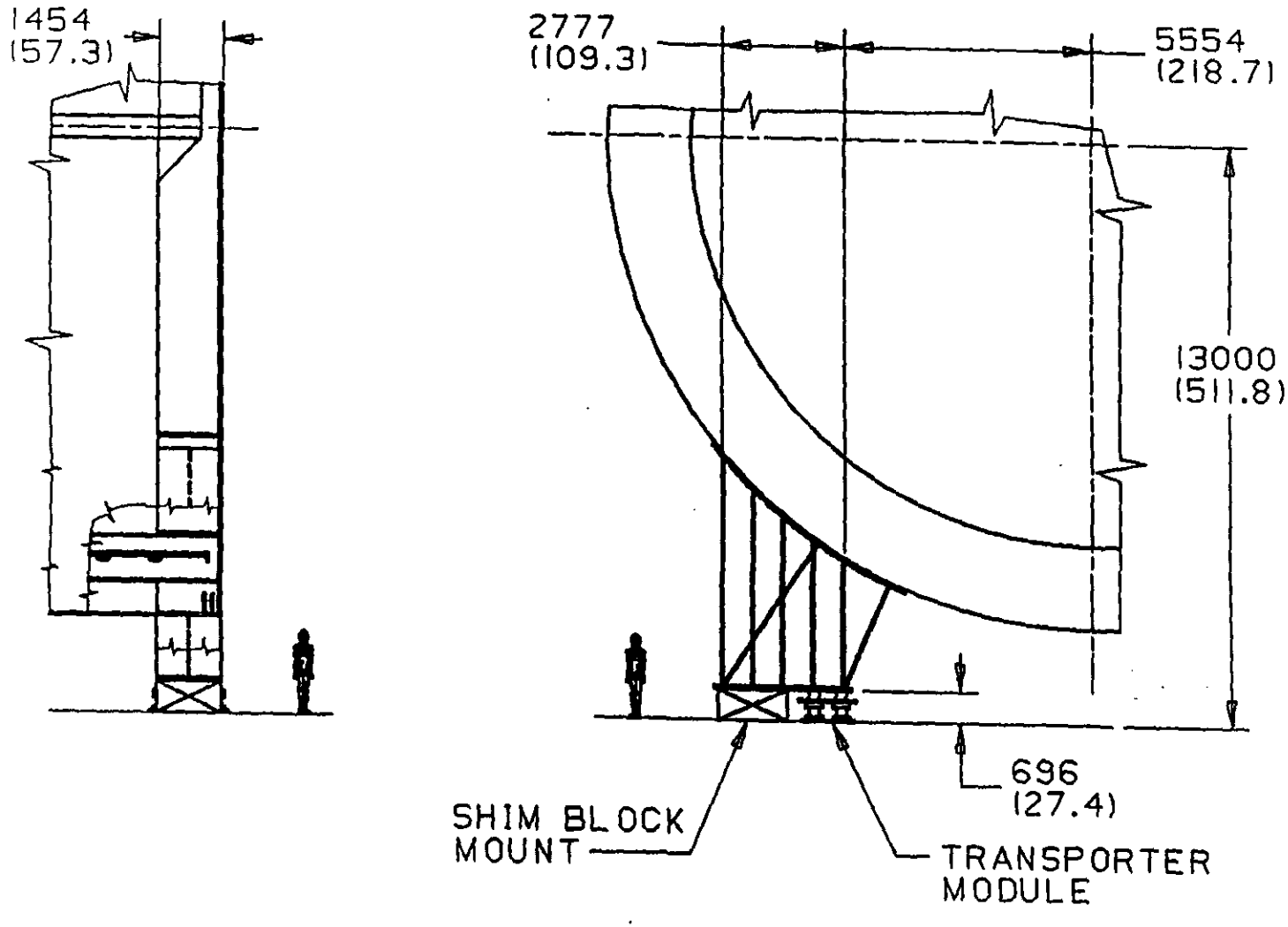

GEM MAGNET, VESSEL AND SUPPORT STRUCTURE

3/6/92

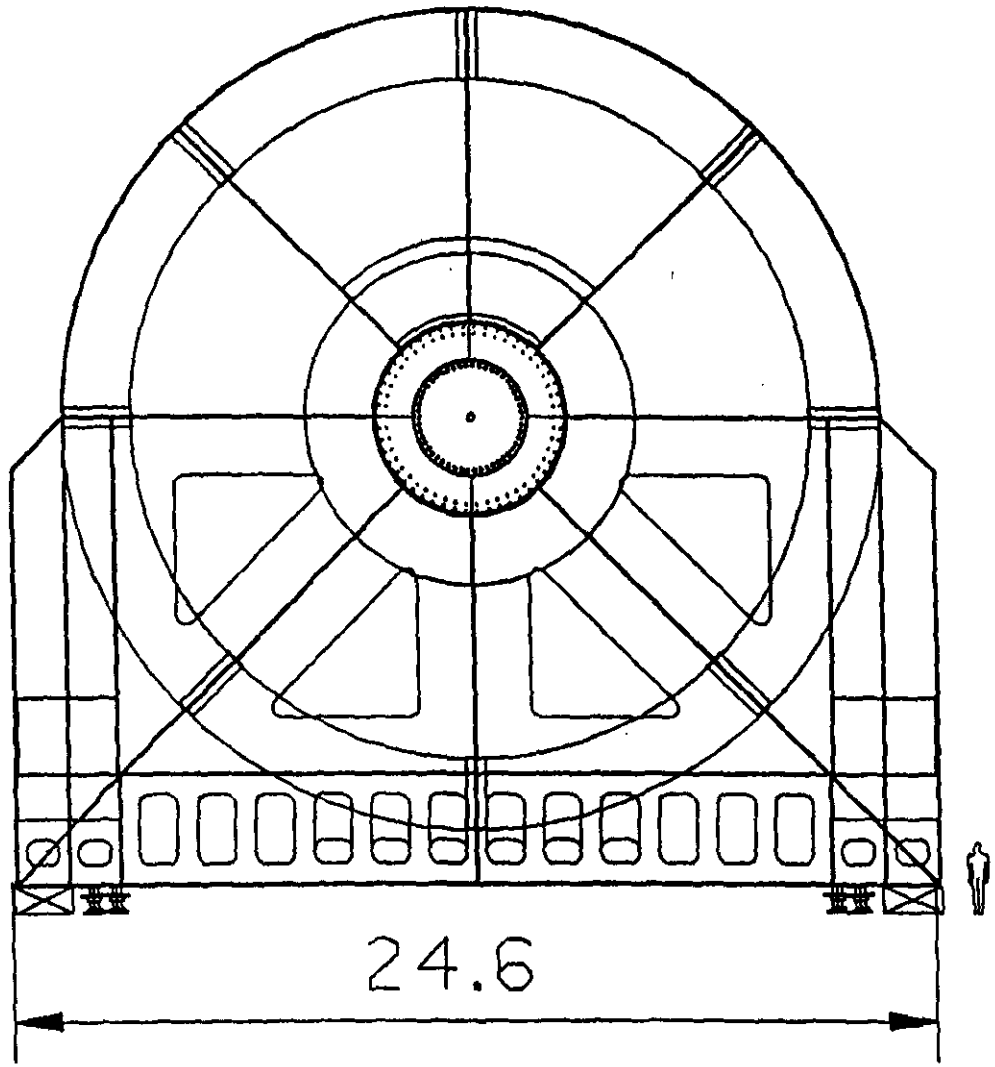

GEM FIELD SHAPER
SUPPORT STRUCTURE
END VIEW

Superconducting Super Collider

Cryogenic System and Cold Testing

Richard Warren

Lawrence Livermore National Laboratory
April 1, 1992

LIQUID HELIUM SYSTEM

- LIQUID HELIUM SUPPLY
- THERMOSYPHON SYSTEM
- FORCED FLOW SYSTEM

LIQUID HELIUM SUPPLY

CONSISTS OF CONVENTIONAL ELEMENTS LOCATED AT GRADE LEVEL

- HELIUM REFRIGERATOR/LIQUEFIER
  2 KW + 20 G/S
- STORAGE/SUPPLY DEWAR - 60,000 LITER
- RECOVERY SYSTEM
  - LOW PRESSURE GAS HOLDER (BAG)
  - RECOVERY COMPRESSOR
  - PURIFIER
- GAS STORAGE

THERMOSYPHON SYSTEM

USES THE 75 M OR SO HEAD TO PROVIDE SINGLE PHASE SUBCOOLED LIQUID TO THE BOBBIN HEAT EXCHANGER

- ABSORBS THE ENVIRONMENTAL HEAT LOAD ON MAGNET
- TEMPERATURE RISES FROM ABOUT 4.5 K AT BOTTOM OF MAGNET TO ABOUT 4.8 K AT TOP
- HELIUM VAPORIZES AS GRADE LEVEL IS APPROACHED

FORCED FLOW HELIUM SYSTEM

HELIUM AT 3 ATM PRESSURE AND 4.5 K FLOWS AT SMALL RATE THROUGH CONDUCTOR CONDUIT

- BYPASSES JT EXPANSION VALVE
- SUBCOOLED IN SUPPLY DEWAR
- FLOWS IN PARALLEL THROUGH EACH COIL SEGMENT AND EACH CABLE SPLICE
- VENTS TO SUPPLY DEWAR

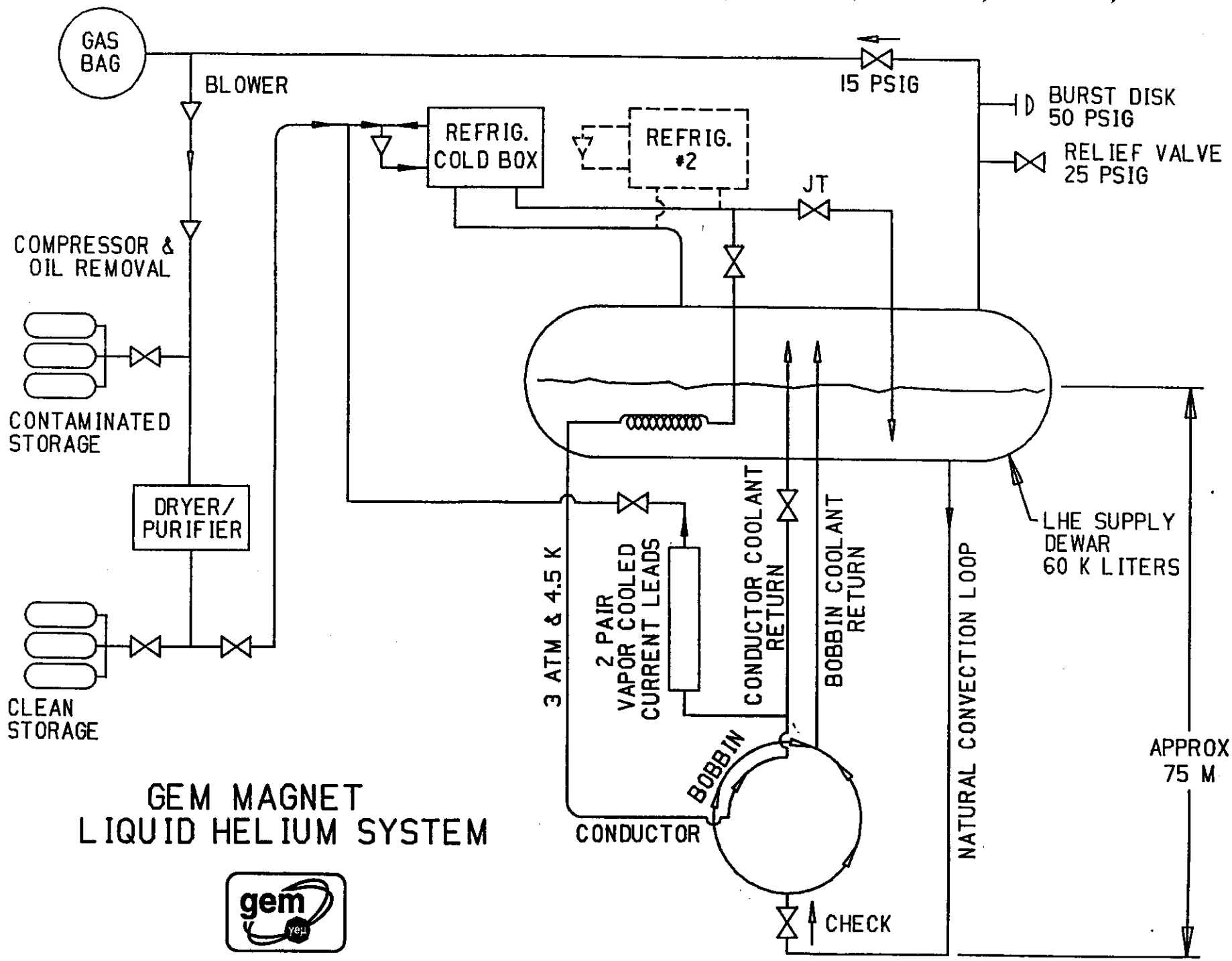

GEM MAGNET LIQUID HELIUM SYSTEM

CV FILE: LLL.ITER.GEM.MAG.LHE-SCHMAT2

COLD TESTING

- COLD TESTING OF MAGNET ASSEMBLY IS PERFORMED PRIOR TO LOWERING INTO EXPERIMENTAL HALL

- MANY POTENTIAL LEAK POINTS
  - NITROGEN CIRCUIT
  - THERMOSYPHON CIRCUIT
  - FORCED FLOW CIRCUIT

- ONCE MAGNET IS INSTALLED IN EXPERIMENTAL HALL LEAK CHECKING WILL BE DIFFICULT

- LEAKS PRECLUDE ACHIEVING GOOD INSULATING VACUUM - 10^{-6} TORR REQUIRED

GEM MAGNET COLD TESTING

- HELIUM REFRIGERATOR NOT AVAILABLE AT TIME OF TEST
- METHOD : PRESURIZE ALL FLOW CIRCUITS WITH HELIUM COOLED IN NITROGEN BOILER AND SNIFF IN VACUUM SPACE WITH MASS SPECTROMETER LEAK CHECKER

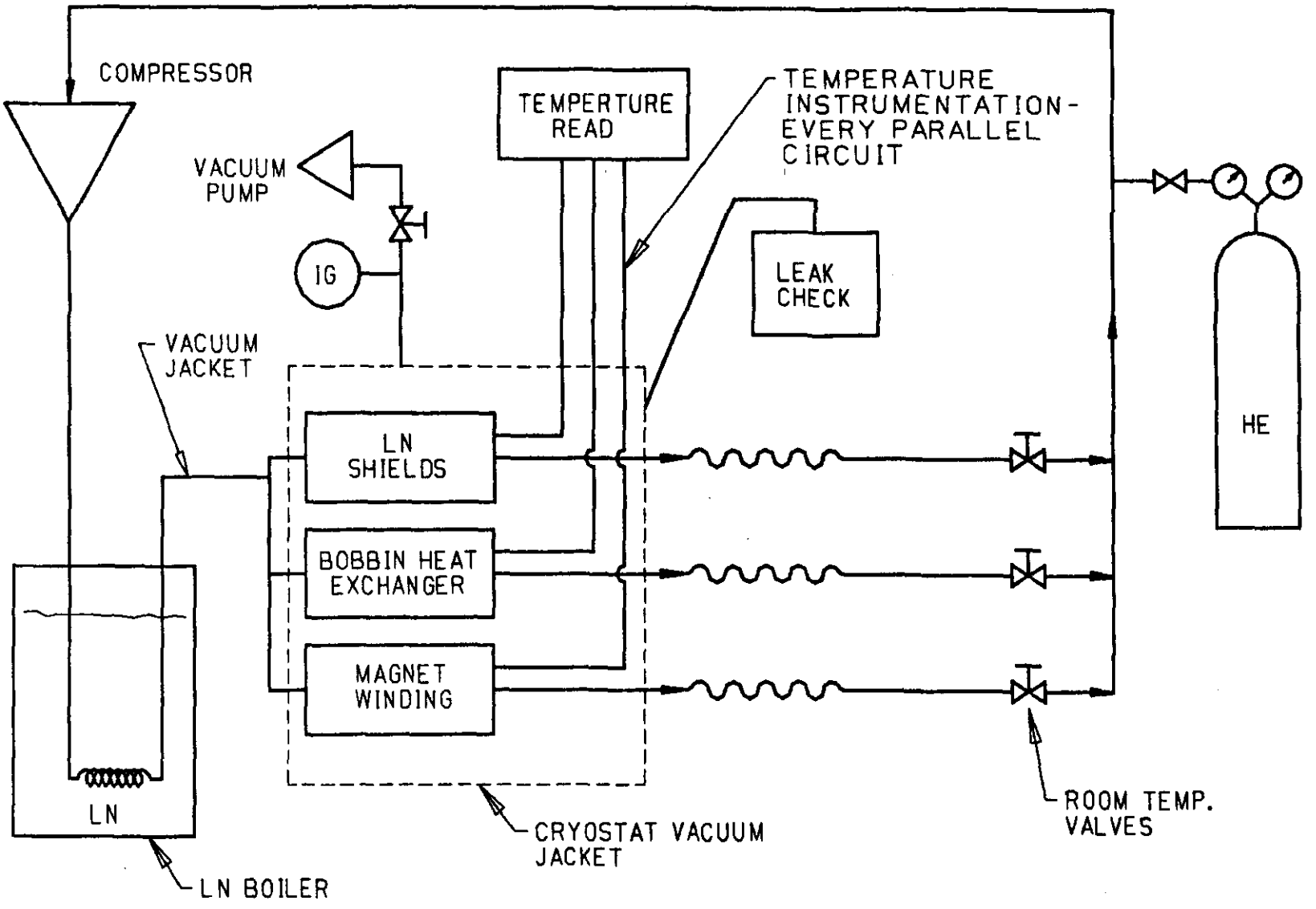

GEM COLD TEST
FLOW SCHEMATIC

Superconducting Super Collider

Power, Protection, and Controls

Eugene Oberst

Lawrence Livermore National Laboratory
April 1, 1992

System Descriptions

Power Supply System:

The Power Supply System consists of a 330 KW, 55,000 ADC power supply, interconnecting buswork and local controls. The system supplies controlled DC current to the superconducting magnet.

Protection System:

The Protection System consists of magnet instrumentation monitors (thermocouples, RTDs, voltage taps), quench detection circuitry, dump resistor, DC circuit breaker and local controls. The system provides the means for detecting magnet quenches and for emergency dissipation of the energy stored in the magnet.

Control System:

The Control System consists of one or more programmable controllers or processors which consolidates the control and monitor functions of the power supply, protection, cryogenics and vacuum systems local controls. The Control System provides the capability of operating the magnet from a single remote workstation. The Control System also provides an interface to the centralized Slow Control System.

Power Supply and Buswork Design Requirements

Magnet parameters of interest:

Inductance	1.98 henries
Operating current	50,200 amps (.1% accuracy)
Stored energy	2.5 G joules
Ground isolation	1 KV
Charge/discharge time	8 hours
Emergency dump time (5τ)	5 minutes

Power Supply Design Requirements:

Input voltage	4160 VAC, 3 ϕ
Output voltage	6 VDC
Output current	55,000 A
Output bus ground isolation	1 KV
+ & - bus isolation	2 KV
Output stage cooling	LCW @ 40 °C (maximum)
Location	surface facility

Local and remote control capability

Buswork Design Requirements:

Overall length	100 meters
Power dissipation	< 330 KW
Cooling	forced air
Current capacity:	
Normal operation	50,200 amps
Maximum	55,000 amps
Ground isolation	1 KV
+ & - bus isolation	2 KV

The buswork must include a section located near the cryostat which can be removed to allow seperation of the cryostat halves. The buswork must also include flexible sections to allow for thermal expansion of the bus bars.

Buswork Design Considerations:

Material choices: copper or aluminum

Parameters:	Copper	Aluminum
Cross section	710 sq cm	1018 sq cm
Volume	7,100,000 cu cm	10,180,000 cu cm
Weight	63,200 kg (69.6 tons)	27,480 kg (30.4 tons)
Resistance	97.2 E-6 ohms	103 E-6 ohms
Voltage drop:		
@ 50,200 A	4.88 VDC	5.16 VDC
@ 55,000 A	5.34 VDC	5.66 VDC
Power dissipation:		
@ 50,200 A	245.0 KW	259.6 KW
@ 55,000A	294.0 KW	311.6 KW

Magnet Protection System Design Requirements

DC Current Interrupter Design Requirements:

Current interrupt capability	55,000 ADC
Ground isolation	1 KV
Open contact isolation	2 KV
Number of interrupt cycles	200 before rebuild required
Location	surface facility

Redundant current interrupt capability

Local and remote operation capability

Dump Resistor Design Requirements:

Energy dissipation	2.5 G joules
Resistance	.04 ohms total
Construction	two sections of alloy resistors with center grounded
Cooling	water immersion (3155 gal = 50 °C ΔT)
Bus to ground isolation	1 KV
+ & - bus isolation	2 KV
Location	surface facility

Dump Resistor Design Considerations:

Material — Alloy 875 (72 Fe, 22 Cr, 5.5 Al)
resistivity = 146 E-6 ohm-cm
melting point = 1520 °C

For a .04 ohm resistor using a 10 cm wide ribbon, 1 mm thick:

A = 1.0 sq cm

l/A = 274, l = 274 cm

However, to keep from developing a steam film on the surface of the ribbon, the power density must be kept below 1.26 MW/sq m

Peak power occurs at the start of a dump;

P= (50.2E3)(50.2E3)(.04) = 100.8 MW

therefore, the surface area must be > 80 sq m

One solution to the problem can be realized by connecting 26 - 1781 x 10 x .1 cm serpentine form ribbons in a series/parallel combination that produces the correct resistance and 92.6 sq m of surface area.

Control System Design Requirements

Power Supply Control Design Requirements:

Controls:	Monitors:
Control power on/off	Output voltage
Power supply output on/off	Output current
Output current setpoint	Interlocks status
Output overcurrent setpoint	Control power on/off
Local/remote operation	Power supply output on/off
Internal/external interlock inhibit	Local/remote operation

The local control system will provide an interface for remote operation by a programmable controller device via a LAN cable. All local control and monitor functions will be duplicated at the remote control location.

Magnet Protection Control Design Requirements:

Controls:	Monitors:
Breaker control voltage on/off	Breaker control voltage on/off
Breaker close/trip	Breaker closed/tripped
Thermocouple readout channel selector	Thermocouple readout
RTD readout channel selector	RTD readout
Voltage tap readout selector	Voltage tap readout
Internal/external interlock inhibit	Interlocks status
Local/remote operation	Quench detected
	Strain gauge readout
	Local/remote operation

The local control system will contain circuitry for detecting magnet quench conditions and will initiate the dump sequence when a quench is detected. Critical quench detection circuitry will be redundant. Instrumentation monitor circuits will have 1 KV signal to ground isolation and will continue to function during a quench sequence.

The local control system will also provide an interface for remote operation by a programmable controller device via a LAN cable. All local control and monitor functions, excluding the quench detection circuitry, will be duplicated at the remote control location.

Cryogenics and Vacuum Controls Design Requirements:

Controls:	Monitors:
Pressure regulator adjustment	Pressure readout
Valve position control	Temperature readout
Compressor on/off	Vacuum readout
Vacuum pump on/off	Valve position monitor
Internal/external interlock inhibit	Compressor on/off
Local/remote operation	Vacuum pump on/off
	Interlock status
	Local/remote operation

The local control system will also provide an interface for remote operation by a programmable controller device via a LAN cable. All local control and monitor functions will be duplicated at the remote control location.

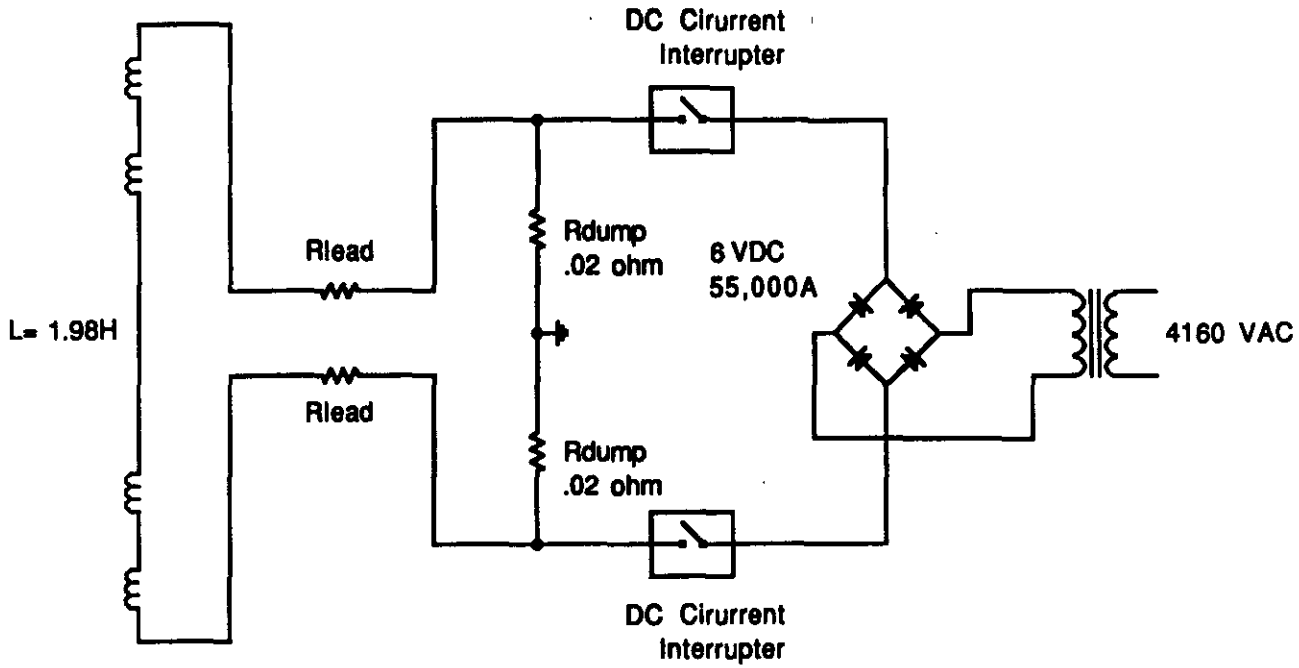

Magnet Power Supply System

3/26/92