GEM TN-92-75
PDT-BU-92-4

Measurements of HRS Wire Tensions 12 Years After Construction

S. Ahlen, A. Marin, B. Zhou
Boston University

February 1992

Abstract:

The technique used to build PDTs for the HRS experiment is described. Wire tensions were measured after 12 years indicating good stability over long periods of time.

GEM MEMO

PDT-BU-92-4

Measurements of HRS Wire Tensions 12 Years After Construction

S. Ahlen, A. Marin, B. Zhou

Boston University

February, 1992

PDT/BU Memo #4
February 12, 1992

Measurements of HRS Wire Tensions 12 Years After Construction

S. Ahlen, A. Marin, B. Zhou

The HRS (for High Resolution Spectrometer) experiment at PEP achieved high momentum resolution (1.5% at 15 GeV) in a 1.6 T magnetic field. It utilized an inner drift chamber and a two-layer array of outer drift tubes. Both the inner and outer drift chambers operated at 14.7 psia and used the so-called HRS gas (89% argon, 10% carbon dioxide, 1% methane). The outer drift tubes had a diameter of 1 inch, a length of 3.5 m, and had stainless steel walls with a thickness of 6 mils. A 50 micron diameter gold plated tungsten wire was strung down the center of each tube and held at 250 grams tension. The wire tension was maintained by both crimping and soldering each end of each wire. The wire ends were positioned with an accuracy of approximately 25 microns at each end through the use of precision machined end plates, and precision ferrules and end-plugs. The tubes were constructed in 1980. They were arranged in 8 octants (112 tubes per octant) around the interaction point, 1.9 m from the beam line at PEP. A sketch of HRS is shown in Fig. 1 in comparison with another high precision experiment, L3 (which achieves 2.4% momentum resolution for muons at 45 GeV). The relevance of the HRS tubes to GEM are shown in Fig. 2, where it is seen that the HRS array is comparable in size to one of the hectadants of the GEM barrel muon system, and that the systematic precision of the HRS chambers is also in the same scale as required for GEM.

Through the generosity of Harold Ogren, of Indiana University, we have been able to borrow one of the two spare octants for HRS (we were offered both spare octants but could only locate one). It has been moved to Boston University and is in the process of being fully evaluated. Of primary interest is the stability of wire tension over the many years since the detector was built. Since the HRS design is similar to what would be used for a GEM PDT system, it would be helpful in understanding long term wire position stability to learn how much, if any, the wire tension in the HRS tubes has changed over the years.

Wire tension was measured in the manner described in PDT/BU Memo #3. The tensions for the 112 wires are shown in Fig. 3. The resistances of the 112 wires, and fundamental resonant frequencies are also shown. The mean wire tension is 248 grams, with a standard deviation of 17 grams. This implies a mean maximum wire sag of 240 microns, and a standard deviation of maximum wire sag per wire of only about 16 microns, which has a negligible effect on tracking resolution for a single wire resolution of 100 microns.

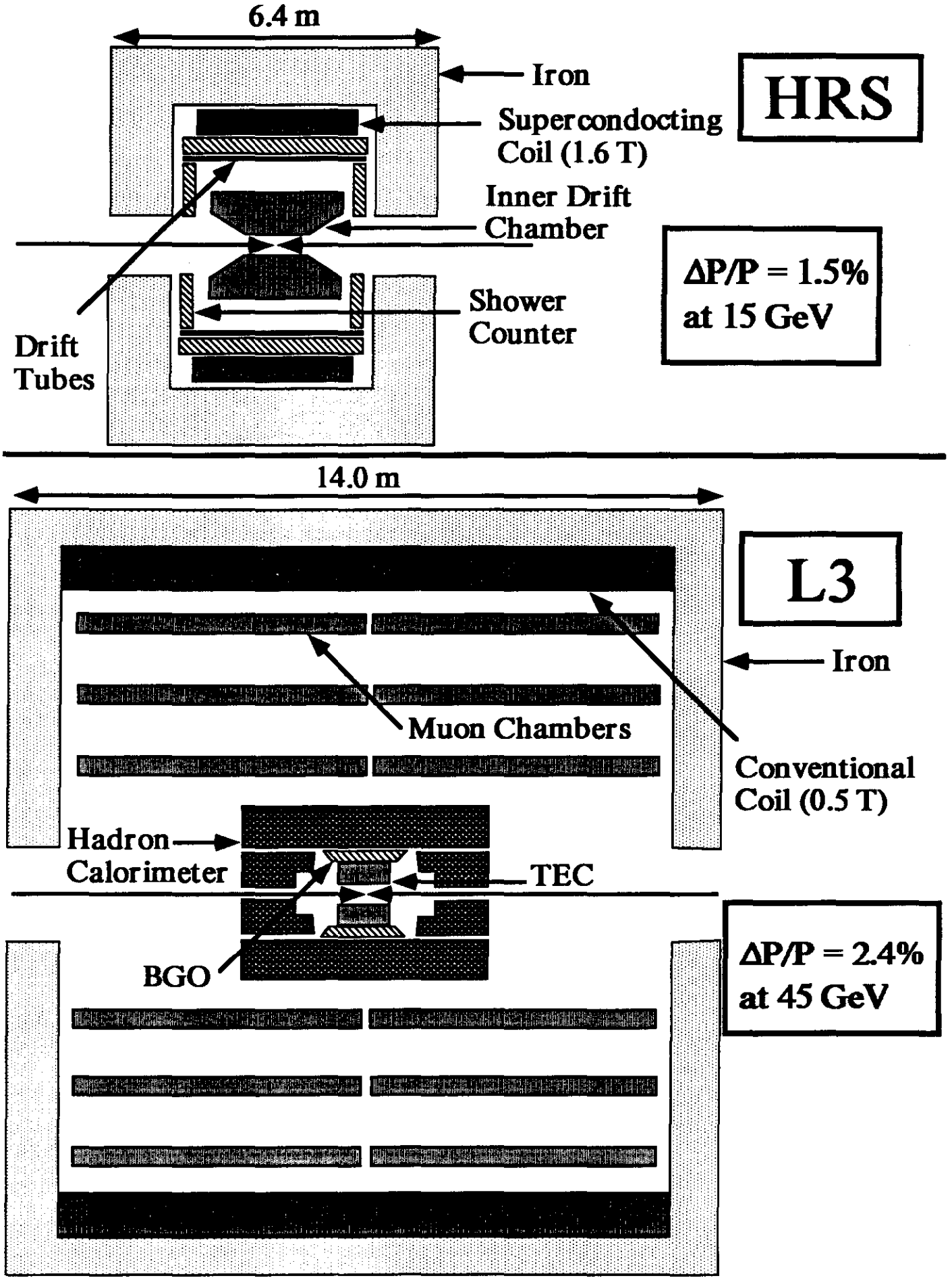
6.4 m
Iron
HRS
Supercondocting
Coil (1.6 T)
Inner Drift
Chamber
ΔP/P = 1.5%
at 15 GeV
Shower
Counter
Drift
Tubes
14.0 m
L3
Iron
Muon Chambers
Conventional
Coil (0.5 T)
Hadron
Calorimeter
TEC
BGO
ΔP/P = 2.4%
at 45 GeV

Fig. 1

END VIEW OF BARREL MUON DRIFT TUBES

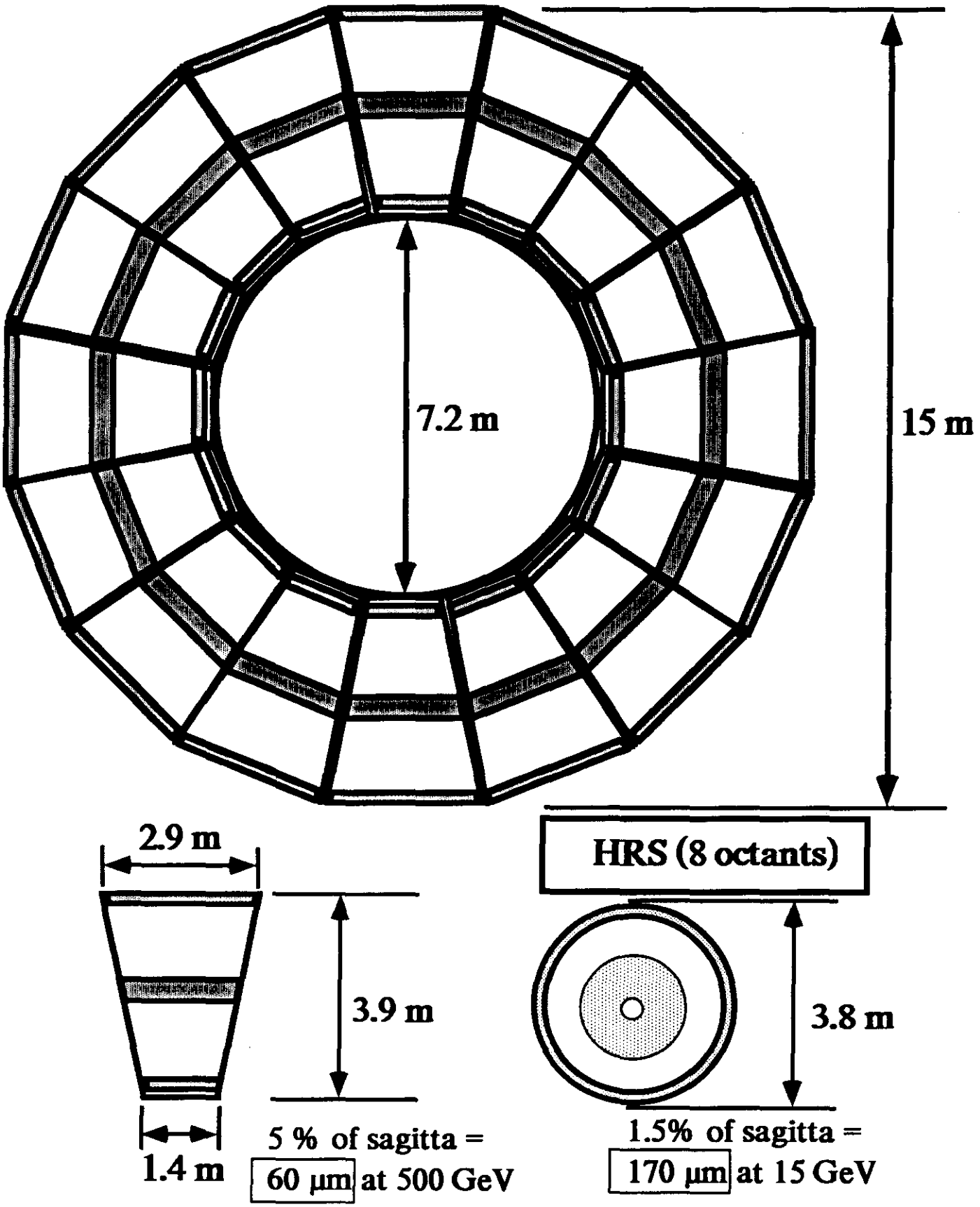

Fig. 2

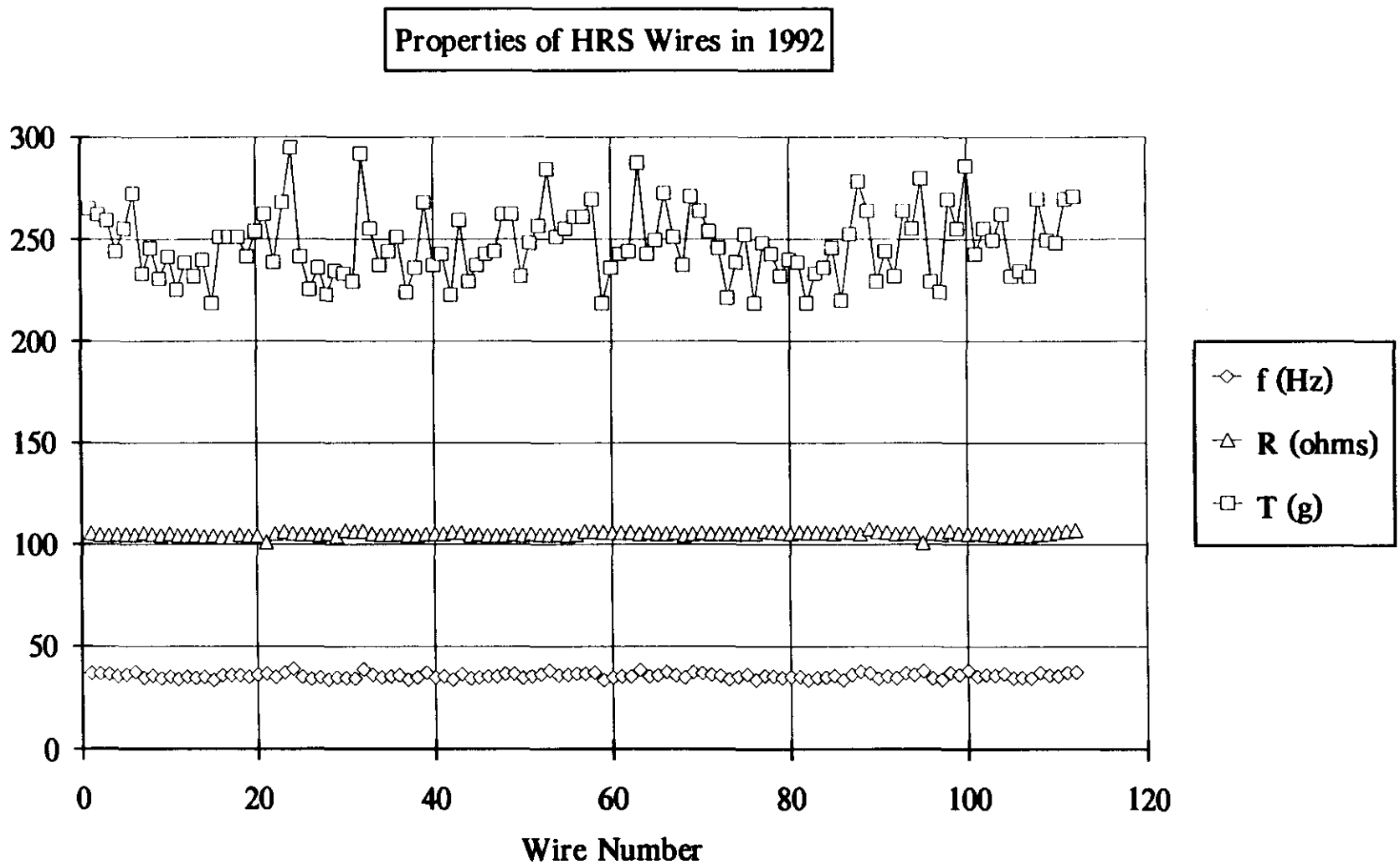
Properties of HRS Wires in 1992
300
250
200
150
100
50
0
0
20
40
60
80
100
120
Wire Number
f (Hz)
R (ohms)
T (g)

Fig. 3